1991

GMC TRUCK

LIGHT DUTY TRUCK

R/V, P MODELS

SERVICE MANUAL

1991
LIGHT DUTY
TRUCK

SERVICE MANUAL

SUBURBAN & UTILITY MODELS,

R/V 3500 & P30/3500 MODELS

FOREWORD

This service manual contains diagnosis, "On-Vehicle" maintenance, and light repair for Light Duty Truck Models ("R/V, and P"). Fuel and emissions related components for throttle body injection are covered in a separate Fuel and Emissions manual. Procedures involving disassembly and assembly of major components for these vehicles are published in a separate "Truck Unit Repair Manual." Wiring diagrams and electrical diagnosis for these models are also published in a separate "Electrical Diagrams and Diagnosis" manual.

This manual should be kept in a handy place for ready reference. If properly used, it will meet the needs of technicians and vehicle owners.

CAUTION

These vehicles contain some parts dimensioned in the metric system as well as in the customary system. Some fasteners are metric and are very close in dimension to familiar customary fasteners in the inch system. It is important to note that, during any vehicle maintenance procedures, replacement fasteners must have the same measurements and strength as those removed, whether metric or customary. (Numbers on the heads of metric bolts and on surfaces of metric nuts indicate their strength. Customary bolts use radial lines for this purpose, while most customary nuts do not have strength markings.) Mismatched or incorrect fasteners can result in vehicle damage or malfunction, or possibly personal injury. Therefore, fasteners removed from the vehicle should be saved for re-use in the same location whenever possible. Where the fasteners are not satisfactory for re-use, care should be taken to select a replacement that matches the original. For information and assistance, see your authorized dealer.

GMC TRUCK DIVISION
TRUCK & BUS GROUP
General Motors Corporation
Pontiac, Michigan

No part of this publication may be reproduced, stored in any retrieval system or transmitted, in any form or by any means, including but not limited to electronic, mechanical, photocopying, recording or otherwise, without the prior written permission of the GMC Truck Division of General Motors Corp. This includes all text, illustrations, tables and charts.

CAUTION

To reduce the chance of personal injury and/or property damage, the following instructions must be carefully observed.

Proper service and repair are important to the safety of the service technician and the safe, reliable operation of all motor vehicles. If part replacement is necessary, the part must be replaced with one of the same part number or with an equivalent part. Do not use a replacement part of lesser quality.

The service procedures recommended and described in this service manual are effective methods of performing service and repair. Some of these procedures require the use of tools specially designed for the purpose.

Accordingly, anyone who intends to use a replacement part, service procedure or tool, which is not recommended by the vehicle manufacturer, must first determine that neither his safety nor the safe operation of the vehicle will be jeopardized by the replacement part, service procedure or tool selected.

It is important to note that this manual contains various *Cautions* and *Notices* that must be carefully observed in order to reduce the risk of personal injury during service or repair, or the possibility that improper service or repair may damage the vehicle or render it unsafe. It is also important to understand that these 'Cautions' and 'Notices' are not exhaustive, because it is impossible to warn of all the possible hazardous consequences that might result from failure to follow these instructions.

1991
LIGHT DUTY TRUCK SERVICE MANUAL
SUBURBAN & UTILITY MODELS, R/V 3500 & P30/3500 MODELS

The Table of Contents on the following page indicates the sections covered in this manual. At the beginning of each individual section is a Table of Contents which gives the page number on which each major subject begins.

When reference is made in this manual to a brand name, number, or specific tool, an equivalent product may be used in place of the recommended item.

All information, illustrations, and specifications contained in this Manual are based on the latest product information available at the time of publication approval. The right is reserved to make changes at any time without notice.

NOTICE: When fasteners are removed, always reinstall them at the same location from which they were removed. If a fastener needs to be replaced, use the correct part number fastener for that application. If the correct part number fastener is not available, a fastener of equal size and strength (or stronger) may be used. Fasteners that are not reused, and those requiring thread locking compound will be called out. The correct torque value must be used when installing fasteners that require it. If the above conditions are not followed, parts or system damage could result.

X-9132
©1990 General Motors Corporation
Printed in U.S.A.

June, 1990
All rights reserved

SECTION	SUBJECT	CONTENTS			
0	GENERAL INFORMATION	0A 0B	GENERAL INFORMATION MAINTENANCE AND LUBRICATION	0C	VIBRATION DIAGNOSIS
1	HEATING AND AIR CONDITIONING	1A 1B	HEATING AND VENTILATION AIR CONDITIONING		
2	FRAME AND CAB	2A	FRAME AND BUMPERS	2B	SHEET METAL AND FIBERGLASS
3	STEERING, SUSPENSION, WHEELS AND TIRES	3A 3B1 3B3 3C	FRONT END ALIGNMENT POWER STEERING STEERING LINKAGE FRONT SUSPENSION AND AXLE	3D 3E 3F1 3F2	REAR SUSPENSION WHEELS AND TIRES STEERING COLUMN-STANDARD STEERING COLUMN-TILT
4	PROPELLER SHAFT AND AXLE	4A 4B1	PROPELLER SHAFT REAR AXLE	4C	FRONT DRIVING AXLE
5	BRAKES	5A 5A1 5A2	HYDRAULIC BRAKES HYDRAULIC BRAKE BOOSTER SYSTEMS HYDRAULIC FOUNDATION BRAKES	5A3 5C	REAR WHEEL ANTILOCK BRAKES PARKING BRAKE
6	ENGINE	6A 6A3 6A4 6A5 6A6 6B1 6B2 6C 6C2 6D 6D1	ENGINE 4.3 LITER V6 5.0L AND 5.7L SMALL BLOCK 7.4 LITER V8 6.2 LITER DIESEL ENGINE COOLING RADIATOR FUEL SYSTEM DIESEL FUEL INJECTION ENGINE ELECTRICAL BATTERY	6D2 6D3 6D4 6D5 6D6 6D7 6E 6E2 6F 6H	CRANKING SYSTEM CHARGING SYSTEM IGNITION SYSTEM ENGINE BLOCK HEATER DIESEL GLOW PLUG ELECTRICAL SYSTEM ENGINE WIRING EMISSIONS DIESEL EMISSIONS EXHAUST VACUUM PUMP
7	TRANSMISSION AND CLUTCH	7A 7A1 7A2	AUTOMATIC TRANSMISSION 4L60 AUTOMATIC TRANSMISSION 4L80E AUTOMATIC TRANSMISSION	7A4 7B 7C 7D	ELECTRONIC TRANSMISSION CONTROLS MANUAL TRANSMISSION CLUTCH TRANSFER CASE
8	ELECTRICAL	8A 8B 8C	CAB ELECTRICAL LIGHTING SYSTEMS INSTRUMENT PANEL AND GAGES	8D 8E	CHASSIS ELECTRICAL WINDSHIELD WIPER/WASHER SYSTEM
9	ACCESSORIES				
10	BODY	10A1 10A2 10A3	DOORS SEATS GLASS	10A4 10A5 10B	INTERIOR TRIM END GATE CAB AND BODY MAINTENANCE
	INDEX				
LAST SECTIONS OF THIS MANUAL	FUEL AND EMISSIONS				

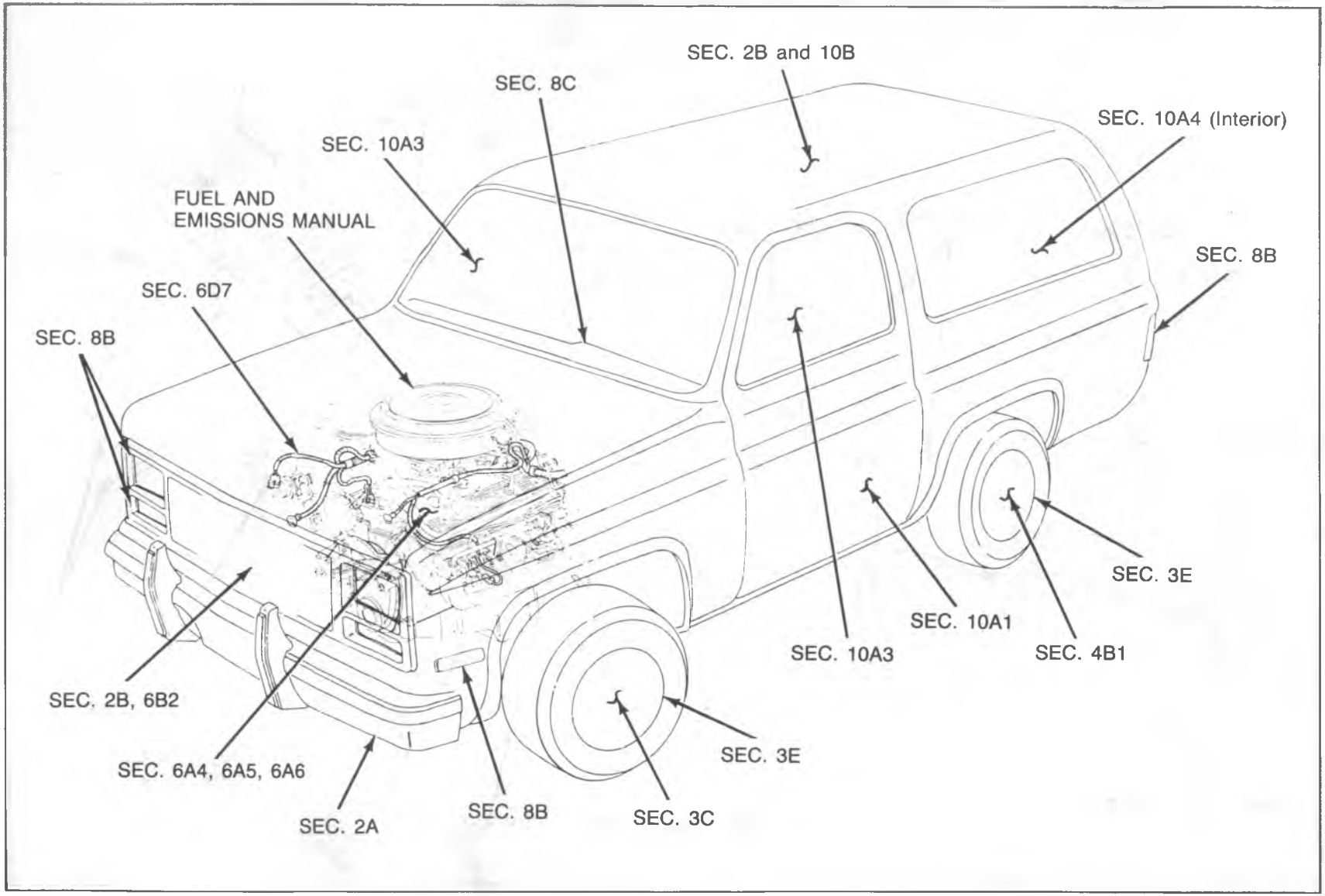
SEC. 2B and 10B
SEC. 8C
SEC. 10A4 (Interior)
SEC. 10A3
FUEL AND
EMISSIONS MANUAL
SEC. 8B
SEC. 6D7
SEC. 8B
SEC. 3E
SEC. 10A1
SEC. 10A3
SEC. 4B1
SEC. 2B, 6B2
SEC. 3E
SEC. 6A4, 6A5, 6A6
SEC. 2A
SEC. 8B
SEC. 3C

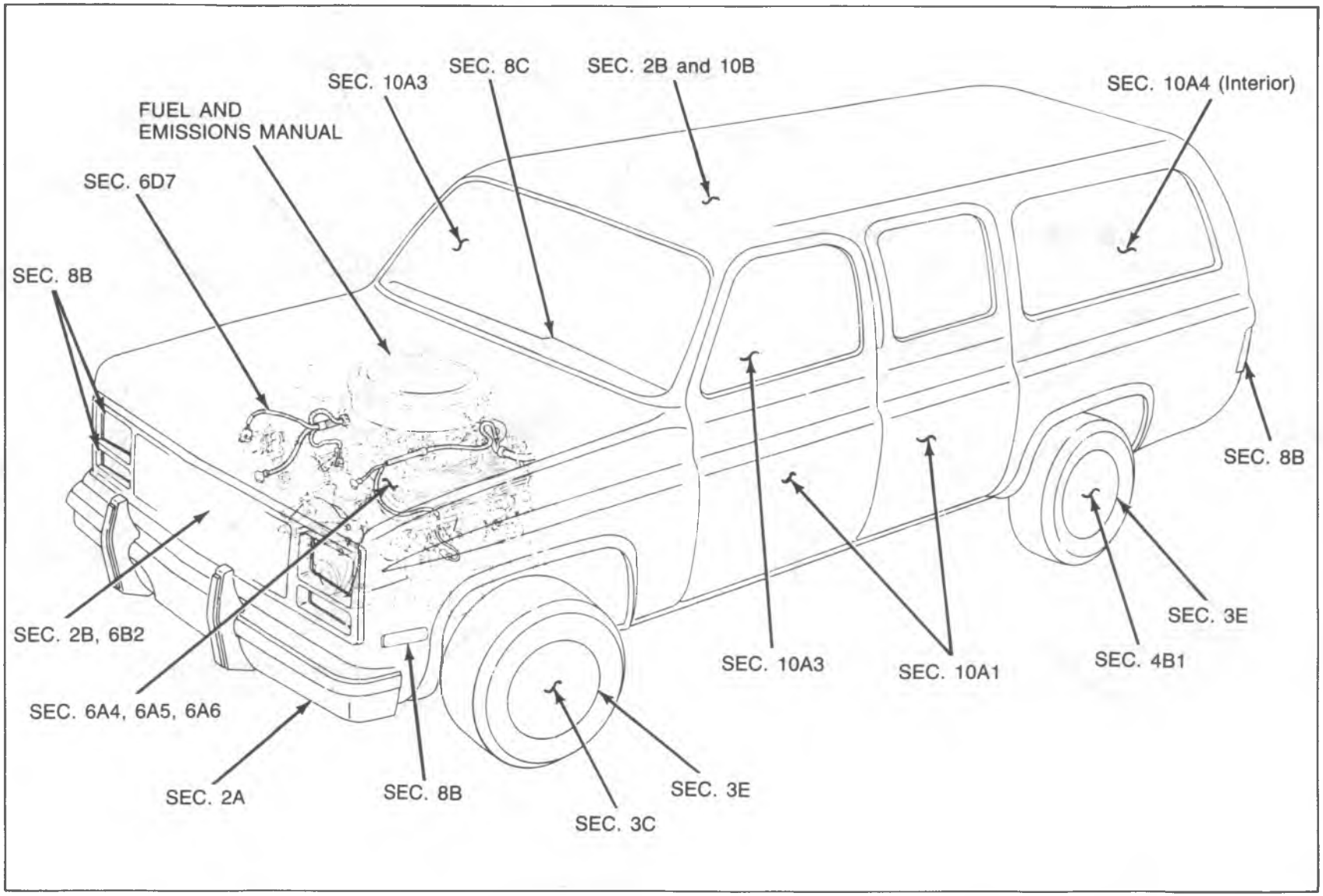
SEC. 10A3
SEC. 8C
SEC. 2B and 10B
SEC. 10A4 (Interior)
FUEL AND
EMISSIONS MANUAL
SEC. 6D7
SEC. 8B
SEC. 8B
SEC. 2B, 6B2
SEC. 6A4, 6A5, 6A6
SEC. 2A
SEC. 8B
SEC. 3C
SEC. 3E
SEC. 10A3
SEC. 10A1
SEC. 4B1
SEC. 3E

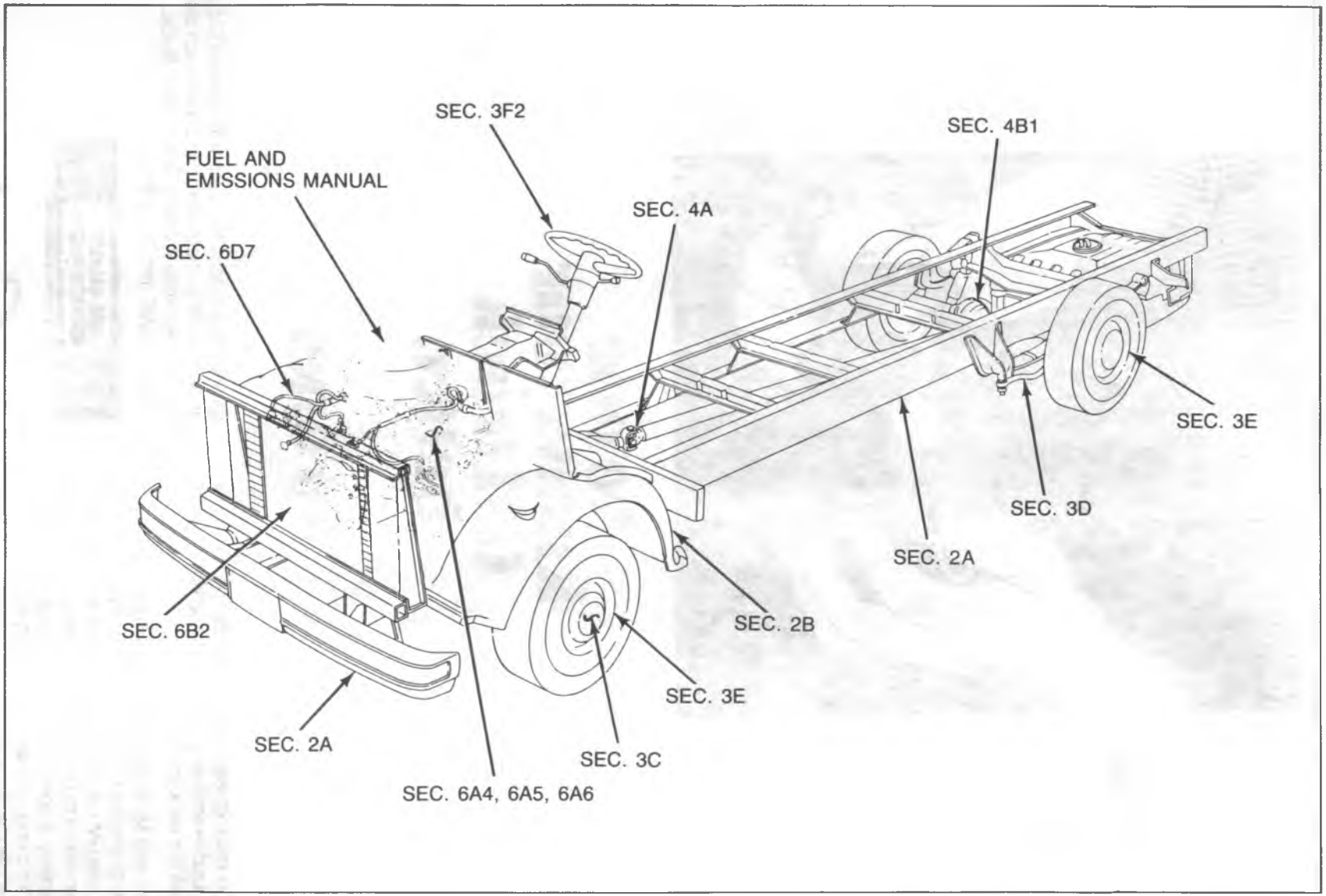
SEC. 3F2
SEC. 4B1
FUEL AND
EMISSIONS MANUAL
SEC. 4A
SEC. 6D7
SEC. 3E
SEC. 3D
SEC. 2A
SEC. 2B
SEC. 6B2
SEC. 3E
SEC. 2A
SEC. 3C
SEC. 6A4, 6A5, 6A6

No one knows your GM truck better.

No one.

Mr. Goodwrench wants you to have the right parts for your truck—whether you see him for service or whether you do the work yourself.

That's why Mr. Goodwrench wants to have a good stock of genuine GM Parts available. Everything from exclusive GM Goodwrench replacement engines and transmissions to GM Goodwrench Motor Oil that meets or exceeds all specifications for General Motors cars or light trucks. And Mr. Goodwrench has a complete line of GM chemicals for fine care of your GM vehicle. Plus accessories to add convenience—or just a little extra style.

So keep that great GM feeling with genuine GM parts at participating independent Mr. Goodwrench dealers selling Chevrolets, Pontiacs, Oldsmobiles, Buicks, Cadillacs, GMC and Chevy Trucks.

GM QUALITY SERVICE PARTS

GM Parts

GENERAL MOTORS CORPORATION

Mr. Goodwrench

F8451

SECTION 0

GENERAL INFORMATION

CONTENTS

SUBJECT	PAGE
General Information	0A-1
Maintenance and Lubrication	0B-1

SECTION 0A

GENERAL INFORMATION

NOTICE: When fasteners are removed, always reinstall them at the same location from which they were removed. If a fastener needs to be replaced, use the correct part number fastener for that application. If the correct part number fastener is not available, a fastener of equal size and strength (or stronger) may be used. Fasteners that are not reused, and those requiring thread locking compound will be called out. The correct torque value must be used when installing fasteners that require it. If the above conditions are not followed, parts or system damage could result.

CONTENTS

SUBJECT	PAGE
General Information	0A- 2
Service Parts Identification Label	0A- 2
Vehicle Identification Number	0A- 2
Certification Label	0A- 3
Model Reference	0A- 4
Preparing Your Truck For Storage	0A- 5
Storage Location	0A- 5
Short Term Storage – Up To Thirty Days	0A- 5
Long Term Storage – Thirty Days or More	0A- 6
Reactivating the Vehicle After Long Storage	0A- 6
Engine Identification Number	0A- 6
Transmission Identification Number	0A- 6
Vehicle Lifting Procedures	0A-10
Metric Fasteners	0A-10
Fastener Strength Identification	0A-17
Prevailing Torque Fasteners	0A-17
Standard Torque Specifications And Fasteners Markings	0A-18
Six Lobed Socket Head Fasteners	0A-19
Anticorrosion Treatment	0A-19
Electrostatic Discharge	0A-19
Graphic Symbols	0A-19
RPO Listing (Regular Production Option)	0A-23
Regular Production Options (RPO) – Tires	0A-26
Common Automotive Abbreviations	0A-27
Lock Cylinder Coding	0A-29

GENERAL INFORMATION

SERVICE PARTS IDENTIFICATION LABEL

The Truck Service Parts Identification Label is provided on all models (figure 1). It is located on the inside of the glove box door (or on an inner body panel for Forward Control models). The Label lists the VIN (Vehicle Identification Number), wheelbase, paint information and all Production options or Special Equipment on the vehicle when it was shipped from the factory. ALWAYS REFER TO THIS INFORMATION WHEN ORDERING PARTS.

VEHICLE IDENTIFICATION NUMBER

The VIN is the legal identifier of the vehicle. On all models except Forward Control, it is located on a plate which is attached to the left top of the instrument panel and can be seen through the windshield from the outside of the vehicle (figure 2). On Forward Control models, the plate is on the dash and toe panel. To find the manufacturer, model and chassis type, engine type, GVW range, model year, plant code, and sequential number, refer to figure 3.

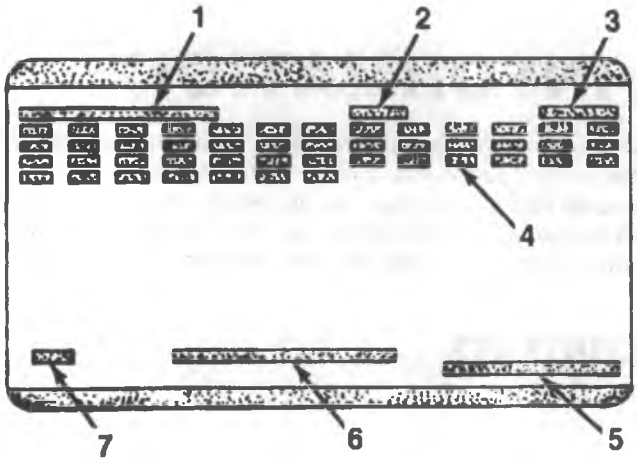

1. Vehicle Identification Number (VIN)
2. Wheel Base
3. Model Designation
4. RPO and/or SEO Options
5. Order Number
6. Exterior Color
7. Paint Technology

F2911

Figure 1 – Service Parts Identification Label

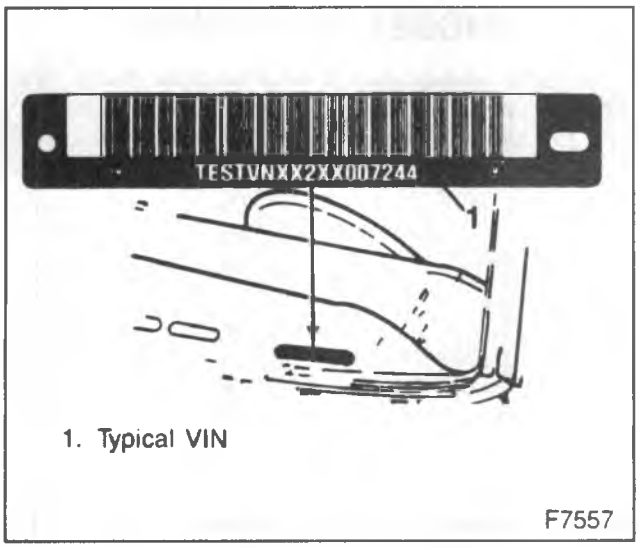

Figure 2 – VIN Location

CERTIFICATION LABEL

The Certification Label shows the GVWR, and the front and rear GAWRs, and the Payload Rating for the vehicle (figure 4).

Gross Vehicle Weight GVW is the weight of the originally equipped vehicle and all items added to it after it has left the factory. This would include bodies, winches, booms, etc.; the drive and all occupants; and the load the vehicle is carrying. The GVW must not exceed the GVWR. Also, the front and rear gross axle weights must not exceed the front and rear GAWRs.

The Payload Rating shown on the label is the maximum allowable cargo load (including the weight of the driver and all occupants) that the vehicle can carry based on all factory installed equipment on the vehicle. The Payload Rating is reduced if any accessories or other equipment is added to the vehicle after final date of manufacture. The weight of these items should be determined and deducted from the Payload Rating.

The vehicle may also have a GCWR (Gross Combination Weight Rating). The GCW (Gross Combination Weight) is the total weight of the loaded tow vehicle (including passengers) and a loaded trailer.

The tires on the vehicle must be the proper size and properly inflated for the load which you are carrying. The Vehicle Certification Label shows the originally equipped tire size and recommended inflation pressures. For more information on tires, refer to WHEELS AND TIRES (Sec. 3E).

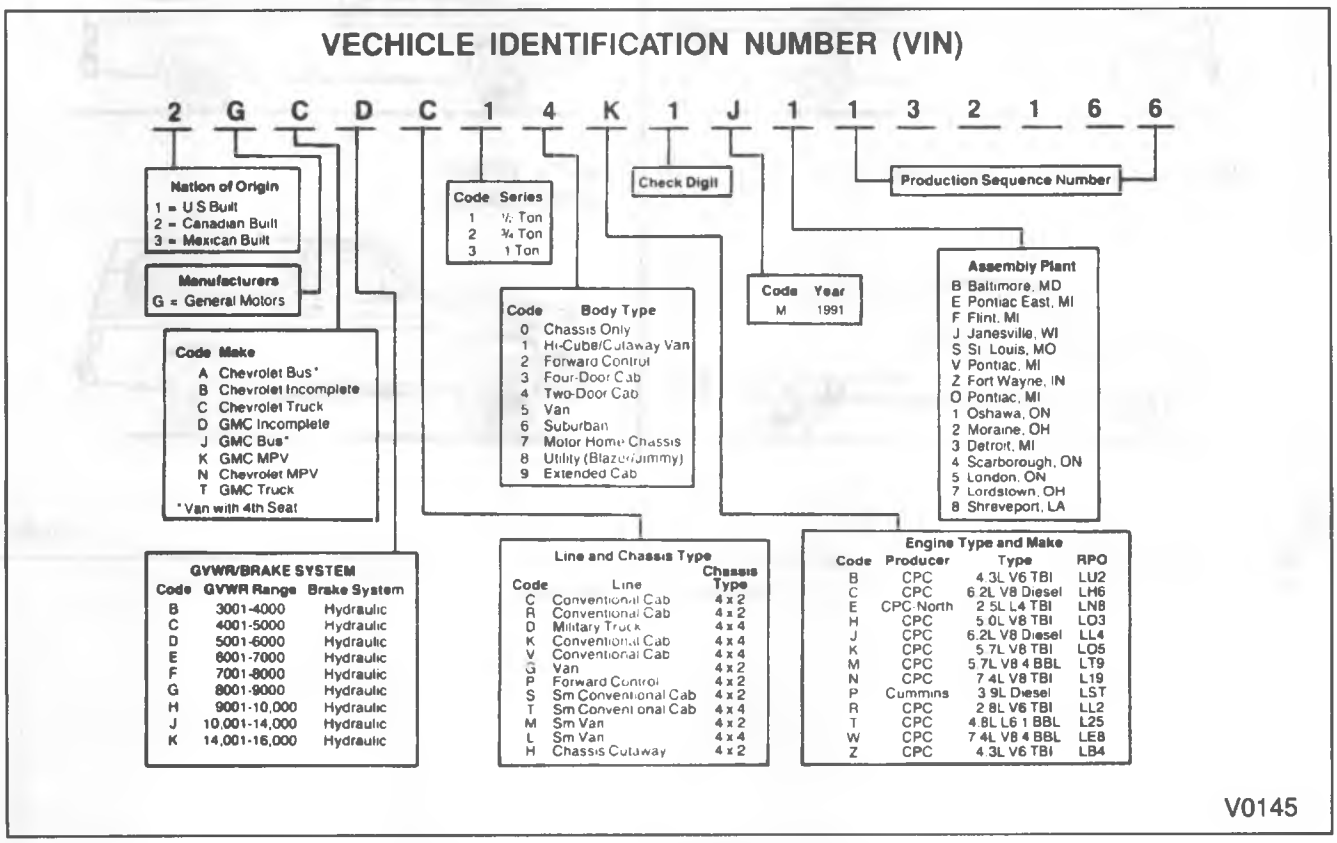

Figure 3 – Vehicle Identification Number (VIN)

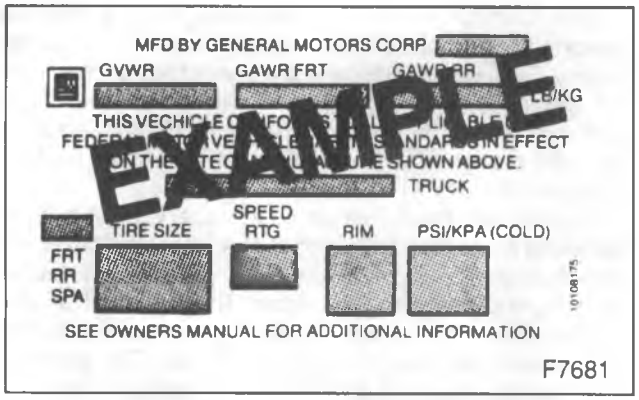

Figure 4 – Certification Label

MODEL REFERENCE

Refer to figure 5 and 6 to determine the vehicle model. For R/V models, "R" is a two-wheel drive vehicle and a "V" is a four-wheel drive vehicle.

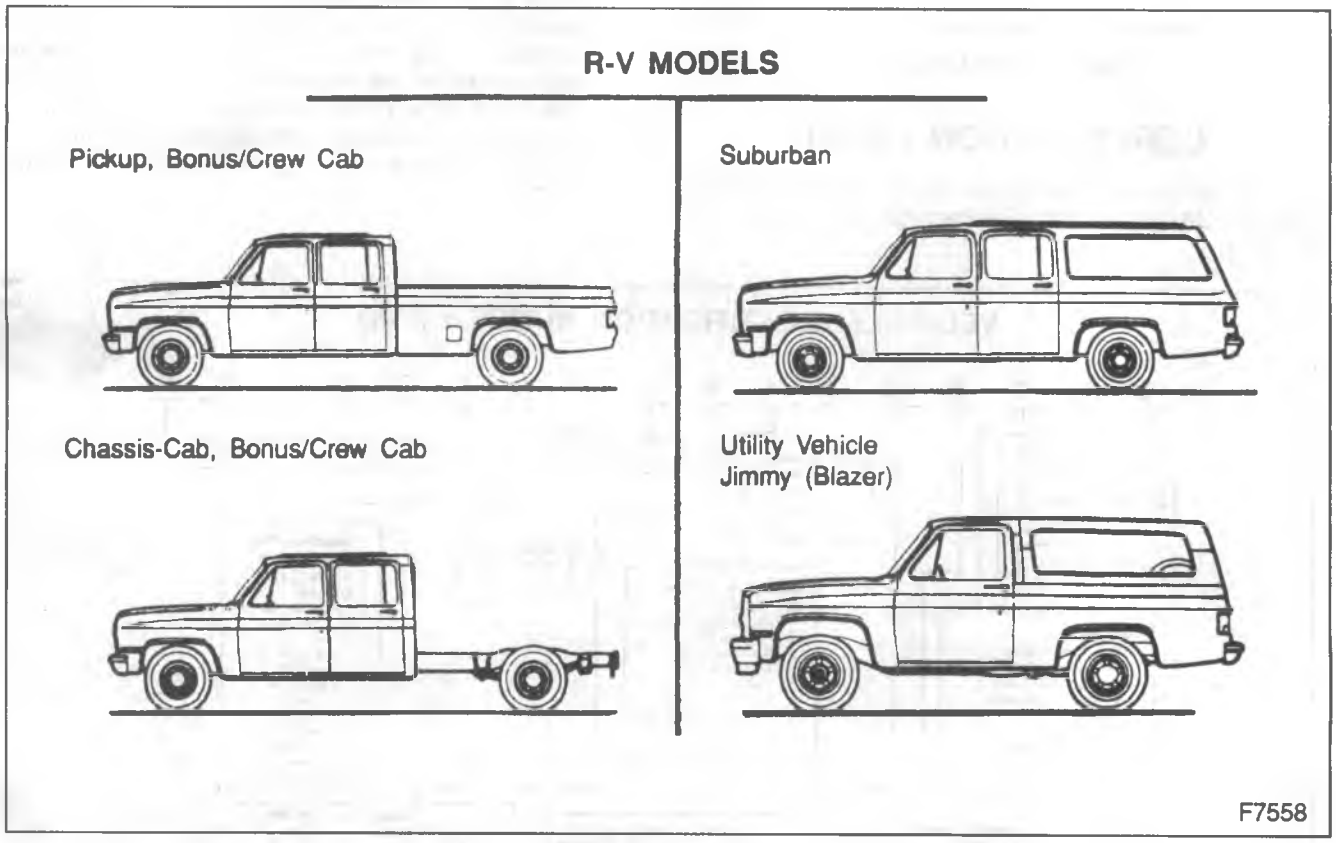

Figure 5 – RV Models

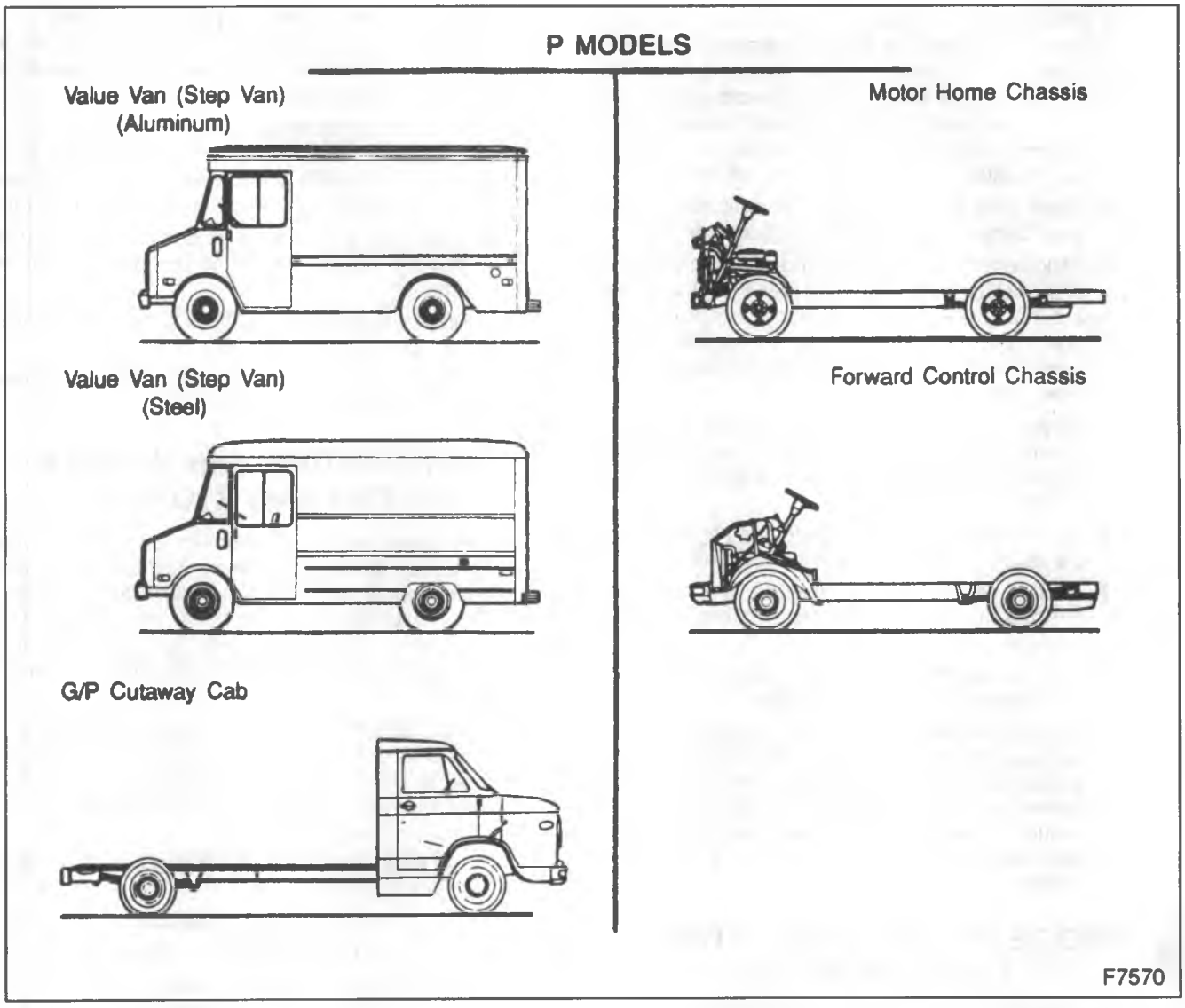

Figure 6—P Model

PREPARING YOUR TRUCK FOR STORAGE

The recommended procedures for limited or extended vehicle storage are outlined below. Special consideration should be given for conditions of high humidity, extreme temperatures or other ambient extremes. Local experience will dictate any additional protective measures for such conditions.

STORAGE LOCATION

Vehicles should be stored in a clean, dry, closed or roofed area, if possible. When outside storage must be used, avoid the following locations:

- Locations adjacent to factories emitting exhaust air which is corrosive or laden with dirt of any kind.
- Storage under trees. Damage to finishes may occur from tree sap or bird droppings.
- Storage under a plastic tarpaulin where excessive condensation can collect. If you use a cover, it should be a quality weather resistant canvas or equivalent tarpaulin with provision for air circulation. Avoid loose fitting tarpaulins because they may flap in the wind and cause paint rub through.

SHORT TERM STORAGE — UP TO THIRTY DAYS

- If the vehicle is going to be stored outdoors, fill the fuel tanks to prevent excessive build up of moisture from condensation. If the vehicle is to be stored indoors or where any fire hazard may present itself during outdoor storage, the fuel tank and lines should be drained.
- Wash the vehicle and wipe it dry before storage.

- When outside storage is used, rinse-wash and wipe all horizontal surfaces to remove any water droplets. This should be done every two weeks or more frequently where dust and precipitation settle on the vehicle. In cold climates, during winter months, rinse-wash (without wiping) to remove accumulated snow, especially in industrial areas.
- Inflate tires to the maximum specifications. See your Owner's Manual for these specifications.
- Park the vehicle on a level surface or with the front of the vehicle higher than the rear if level surfaces are not available. This will prevent fuel from draining into the engine over a long period with possible damage to the engine by hydrostatic lock when starting is attempted.
- Inspect all fluid levels and bring them to specification. In cold climate areas, assure that the engine anti-freeze and windshield washer solvent protection is adequate.
- Run the engine until the radiator top hose is hot to the touch before shutting the engine off.
- Shut all ventilator ducts, close the windows, and turn the heater/air conditioner controls to the off position.
- Do not apply the parking brake. Block the wheels to prevent the vehicle from rolling.
- Disconnect the positive and negative battery cables at the battery(s). Check the state of charge of the battery(s) and recharge if necessary. The battery should be checked at regular intervals and brought to full charge to prevent deterioration. In cold climates, this is necessary to prevent the battery(s) from freezing.

LONG TERM STORAGE – THIRTY DAYS OR MORE

These steps should be taken IN ADDITION to those under Short Term Storage.

- Apply a coat of wax to the exterior painted and plated surfaces.
- Start the engine and run it until the radiator top hose is hot to the touch. Drain the engine oil and replace the filter. Fill the engine with the correct amount of the proper oil. Refer to Engine Oil and Filter Change. If the vehicle is equipped with air conditioning, it should be operated during this final engine warm up to lubricate the compressor seal.
- For gasoline engines:
  After the oil has been replaced, start the engine and remove the air cleaner. Pour 1/2 to 1 pint (1/4 to 1/2 liter) of 10W or lighter oil into the throttle body injector air intake. Pour slowly at first, then rapidly, using the last quarter to stall the engine. Replace the air cleaner.
- For diesel engines:
  Remove all glow plugs and crank the engine for five seconds with the throttle half open. Replace the glow plugs.
- Drain the coolant from the radiator, cylinder block and heater. Refer to Cooling System Draining, Flushing, and Filling.
- Remove the battery(s) and store in a cool, dry area. The battery(s) should be checked at regulator intervals and charged as necessary to prevent deterioration.
- For manual transmission vehicles, the clutch should be held in the disengaged position by placing a suitable block between the clutch pedal and protected area of the dash or driver's seat.
- If practical, place blocks or stands under the front and rear suspension so that tires do not touch the ground.
- Drain fuel from tank and lines to prevent gumming and to reduce fire hazard.
- Remove the windshield wiper blades and arms and store them in the vehicle.

REACTIVATING THE VEHICLE AFTER LONG STORAGE

- Inspect the engine compartment, under and around the vehicle for physical damage and loose hardware, wiring connections or hoses. Inspect for evidence of oil or fluid leakage. Repair or replace parts as necessary. During this inspection, also watch for nesting animals. Animals may also be found under seats.
- Inspect oil and fluid levels in the following: engine, radiator, crankcase, transmission, differential, fuel tank, windshield washer, power steering pump and refrigerant and oil in the air conditioning system. Add or replace fluids as necessary.
- Inflate tires to the recommended operating pressure, including the spare.
- Lubricate the chassis suspension and steering components. Refer to Chassis Lubrication.
- Clean the battery end of cables and install the battery(s). The battery(s) should be fully charged.
- Bleed and adjust the brakes, adding fluid as necessary.
- Clean any dirt from inside of the air cleaner. Refer to Air Cleaner Element Replacement.
- Remove the spark plugs to clean and gap them (gasoline engines only). Refer to Spark Plugs and Wires Replacement.
- Turn the air conditioning compressor over by hand before starting vehicles with air conditioning. Use an adjustable spanner wrench. This will prevent clutch slippage if the compressor has seized.
- Reinstall the wiper arms and blades.

ENGINE IDENTIFICATION NUMBER

Refer to figures 7, 8 and 9 to determine the location of the engine I.D. number.

TRANSMISSION IDENTIFICATION NUMBER

Refer to figures 10 through 13 for determining transmission identification numbers and code meanings.

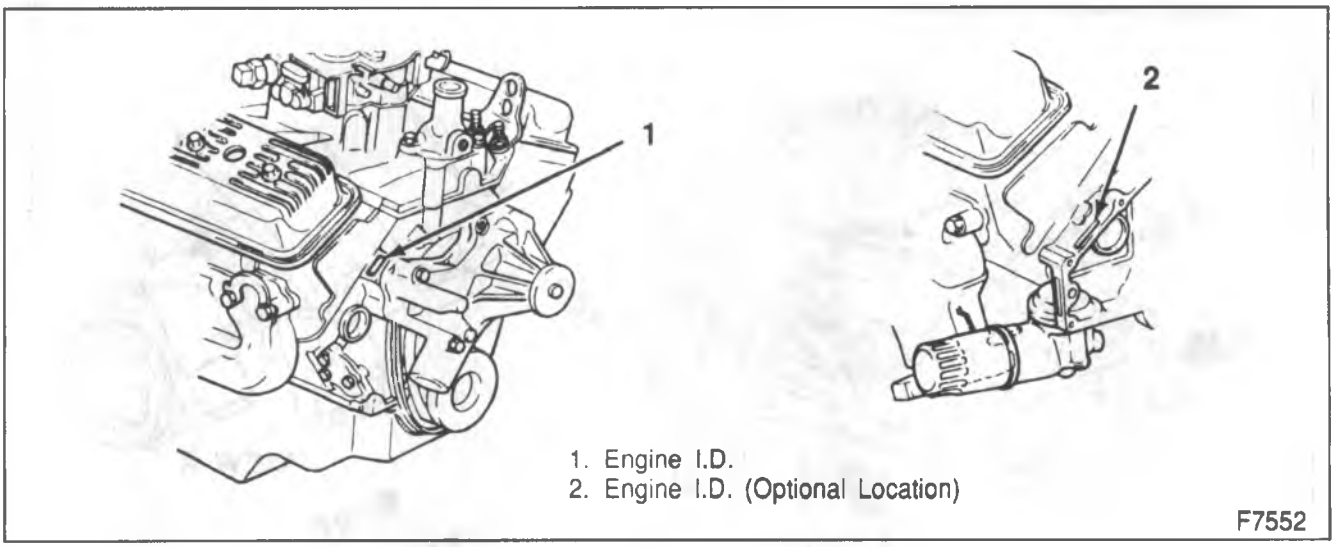

Figure 7—4.3L Engine I.D. Location

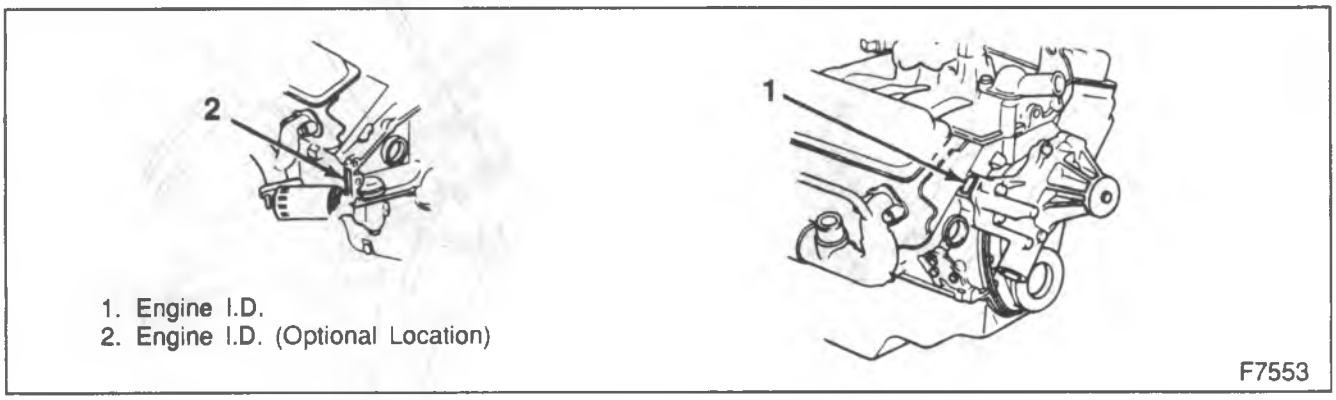

Figure 8—5.7L and 7.4L Engine I.D. Location

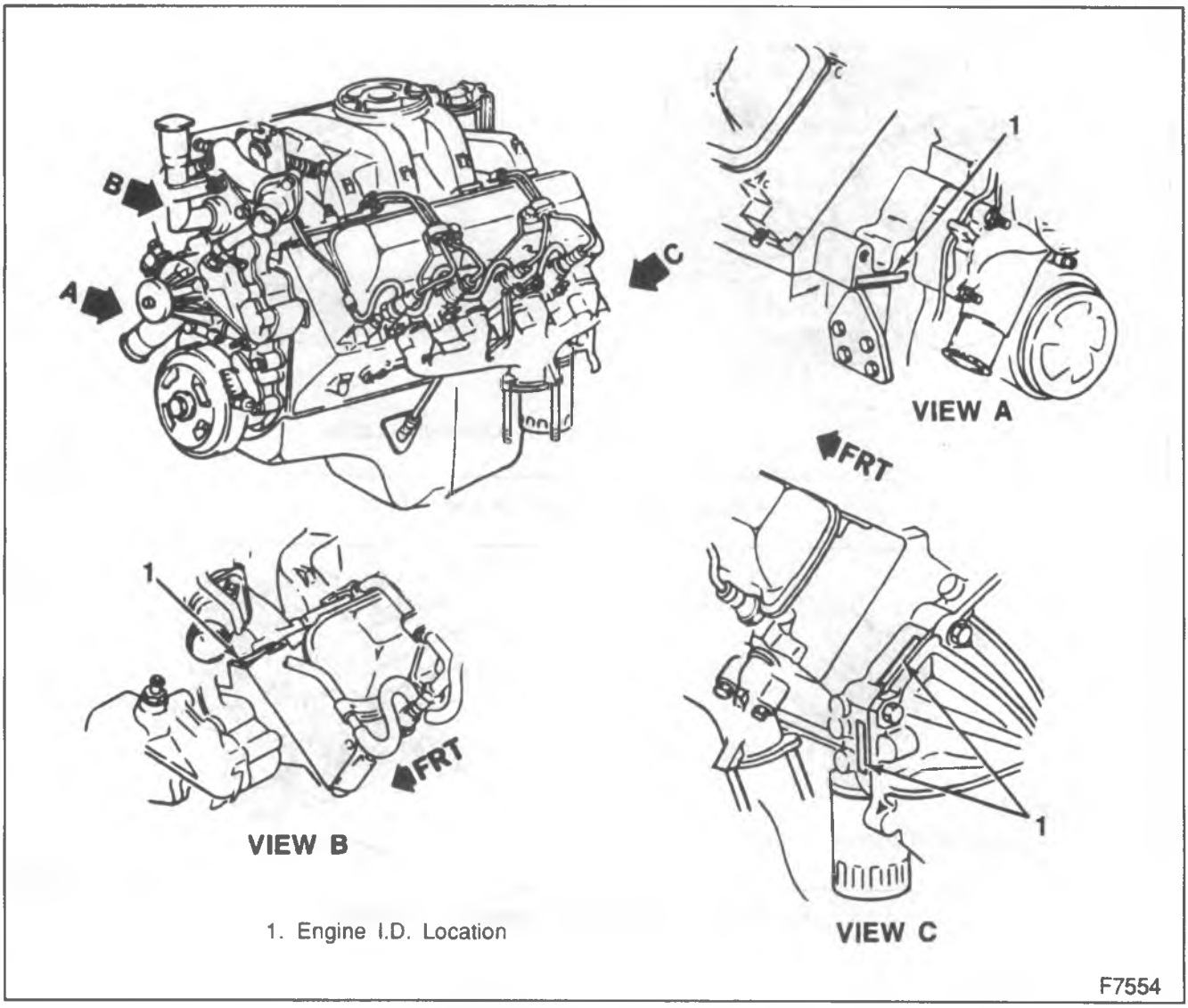

Figure 9—6.2L Diesel Engine I.D. Location

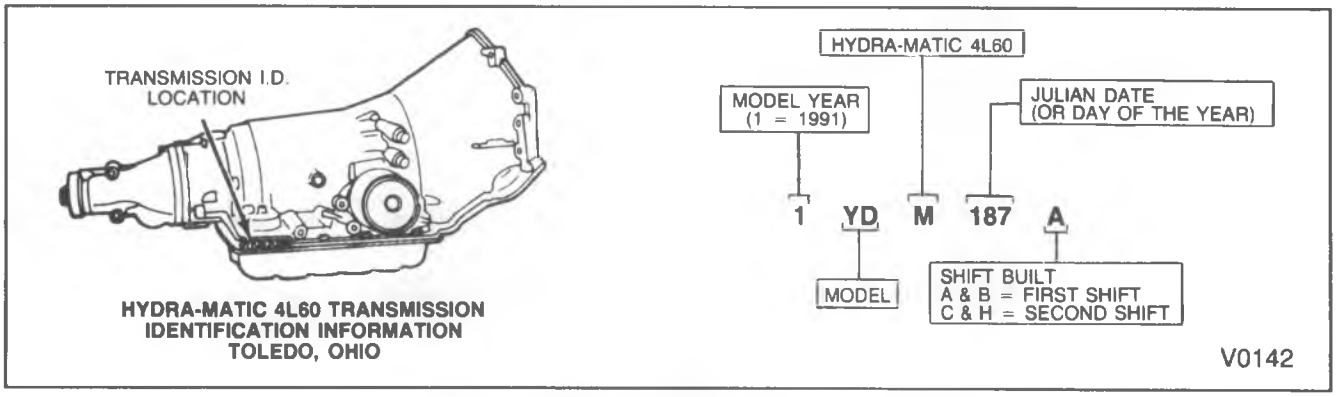

Figure 10—Hydra-matic (4L60) Transmission I.D. Location

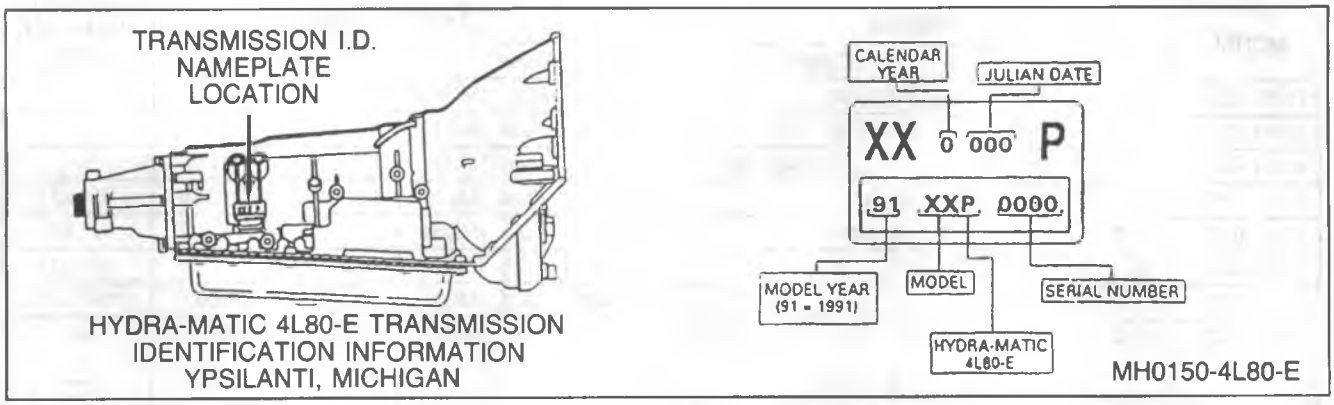

Figure 11 – Hydra-matic 4L80-E Transmission I.D. Location

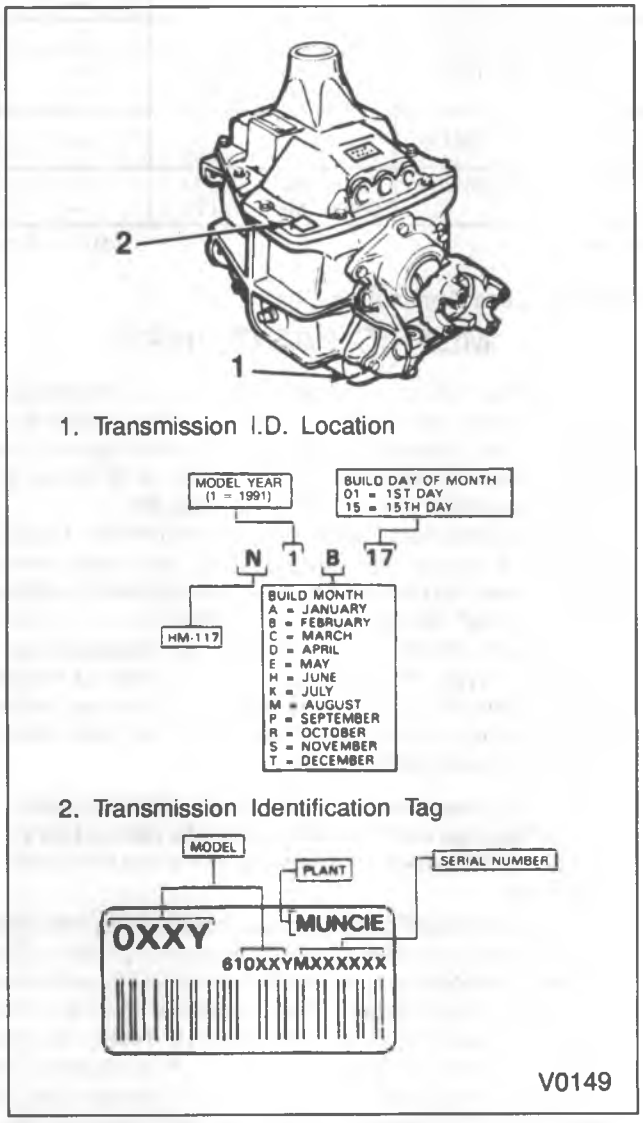

Figure 12 – Hydra-matic HM-117 Transmission I.D. Location

MODEL	ENGINE		TRANSMISSION		TRANSFER CASE
	Base	Option	Base	Option	
R109 (06)	5.7L V8 (L05)	6.2L V8 (LH6)	4-spd. Auto. (MD8)	—	—
R209 (06)	5.7L V8 (L05)	6.2L V8 (LL4), 7.4L V8 (L19)	4-spd. Auto. (MT1)	—	—
R309 (43)	5.7L V8 (L05)	6.2L V8 (LL4), 7.4L V8 (L19)	4-spd. Man. (M20)	4-spd. Auto. (MT1)	—
V105 (16)	5.7L V8 (L05)	6.2L V8 (LL4)	4-spd. Man. (M20)	4-spd. Auto. (MD8)	NP 241
V109 (06)	5.7L V8 (L05)	6.2L V8 (LH6)	4-spd. Auto. (MD8)	—	NP 241
V209 (06)	5.7L V8 (L05)	6.2L V8 (LL4)	4-spd. Auto. (MT1)	—	NP 241
V309 (43)	5.7L V8 (L05)	6.2L V8 (LL4), 7.4L V8 (L19)	4-spd. Man. (M20)	4-spd. Auto. (MD8)	NP 205
P308 (42), 310 (42)	4.3L V6 (LB4)	5.7L V8 (L05), 6.2L V8 (LL4)	4-spd. Man. (M20)	4-spd. Auto. (MT1)	—
—	—	7.4L V8 (L19)	—	5-spd. Man. (MT8)	—
P310 (42)	4.3L V6 (LB4)	5.7L V8 (L05), 6.2L V8 (LL4)	4-spd. Man. (M20)	4-spd. Auto. (MT1)	—
—	—	—	—	5-spd. Man. (MT8)	—
P311 (32)	7.4L V8 (L19)	6.2L V8 (LL4)	4-spd. Auto. (MT1)	—	—
P314 (32)	7.4L V8 (L19)	6.2L V8 (LL4)	4-spd. Auto. (MT1)	—	—
P314 (42)	4.3L V6 (LB4)	5.7L V8 (L05), 6.2L V8 (LL4) 7.4L V8 (L19)	4-spd. Man. (M20)	4-spd. Auto. (MT1)	—
—	—		—	5-spd. Man. (MT8)	—
P318 (32), 320 (32)	7.4L V8 (L19)	—	4-spd. Auto. (MT1)	—	—
P318 (42)	4.3L V6 (LB4)	5.7L V8 (L05), 6.2L V8 (LL4) 7.4L V8 (L19)	4-spd. Man. (M20)	4-spd. Auto. (MT1)	—
—	—		—	5-spd. Man. (MT8)	—

Refer to the RPO listing in this section if additional descriptions are needed.

GMTB-3073-2A

Figure 13 – Engine, Transmission, Transfer Case Application Chart

VEHICLE LIFTING PROCEDURES

CAUTION: To help avoid personal injury when a vehicle is on a hoist, provide additional support for the vehicle at the opposite end from which components are being removed. This will reduce the possibility of the vehicle falling off the hoist.

The only lift points for these vehicles are shown in figures 14 and 19 and are described in the following paragraphs.

When lifting the R vehicle with a hoist, the rear hoist pads should be positioned under the rear spring front hangers.

When lifting the V vehicle with a hoist, the front hoist pads should be positioned under the frame, at the front body mount. The rear hoist pads should be positioned under the rear spring front hangers.

When lifting the front of the V vehicle with a floor jack, position the jack pad at the center of the axle, not under the front differential.

When lifting the P vehicle with hoist, the rear hoist pads should be positioned under the frame and inboard of the rear spring front hangers.

Any time a vehicle is lifted with a vehicle jack or a floor jack, the wheels at the opposite end of the lifted end should be chocked. Also, jack stands should be used to provide support. When supporting the vehicle with jack stands, the jack stands should be placed under the frame, the front suspension crossmember or the axle.

When removing major components of the vehicle while the vehicle is on a hoist, the vehicle frame should be chained to the hoist pads in order to prevent tip-off.

NOTICE: When jacking or lifting a vehicle, be certain that the lift pads do not contact the catalytic converter, brake lines, brake cables, or fuel lines. Such contact may result in damage or unsatisfactory vehicle performance.

METRIC FASTENERS

Models are primarily dimensioned in the metric system. Many fasteners are metric and are very close in dimension to well-known customary fasteners in the inch system. It is most important that replacement fasteners be of the correct nominal diameter, thread pitch and strength.

Original equipment metric fasteners (except "beauty" bolts, such as exposed bumper bolts, and cross recess head screws) are identified by a number of marking indicating the strength of the material in the fastener as outlined later. Metric cross recess screws are identified by a Posidriv or Type 1A shown in figure 20. Either a Phillips head or Type 1A cross recess screwdriver can be used in Posidriv recess screw heads, but Type 1A cross recess screwdrivers will perform better.

NOTICE: Most metric fasteners have a blue color coating. However, this should not be used as positive identification as some fasteners are not color coated.

General Motors Engineering Standards, along with other North American Industries, have adopted a portion of the standard metric fastener sizes defined by ISO (International Standards Organization). This was done to reduce the number of fastener sizes used and yet retain the best strength qualities in each thread size. For example, the customary 1/4-20 and 1/4-28 screws are replaced by the metric M6.0X1 screw which has nearly the same diameter and has 25.4 threads per inch. The thread pitch is in between the customary coarse and fine thread pitches.

Metric and customary thread notation differ slightly. The difference is shown in figure 21.

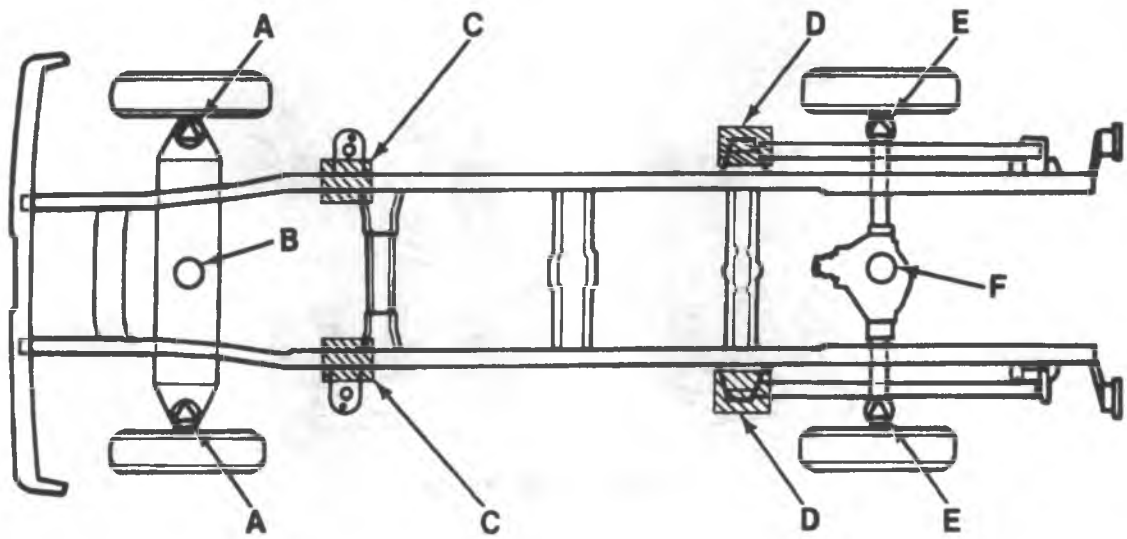

A. Lower control arm; inboard of the lower ball joint.
B. Front suspension crossmember; center.
C. Frame at foward body mount.
D. Rear spring forward hanger.
E. Rear axle; between the spring and brake backing plate.
F. Differential case; center.

Vehicle Jack or Floor Jack
Floor Jack
Hoist

B7500

Figure 14—Chassis Lift Points

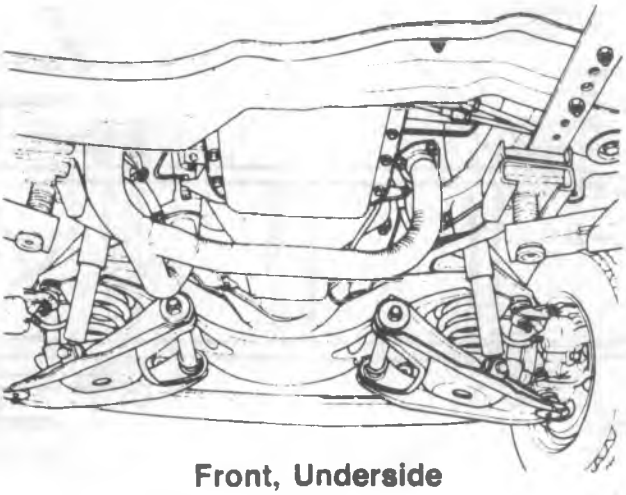

Front, Underside

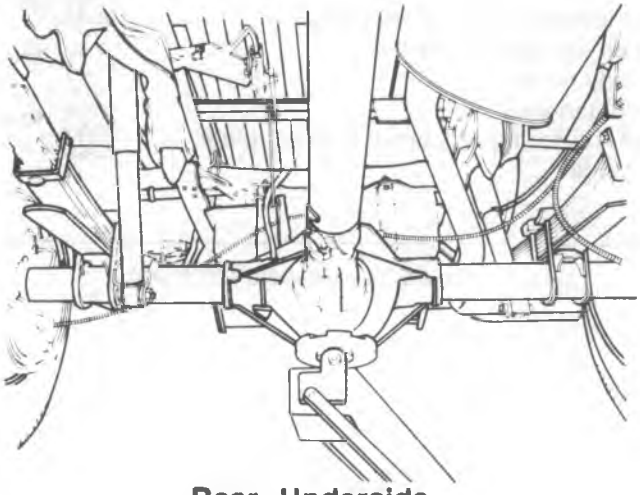

Rear, Underside

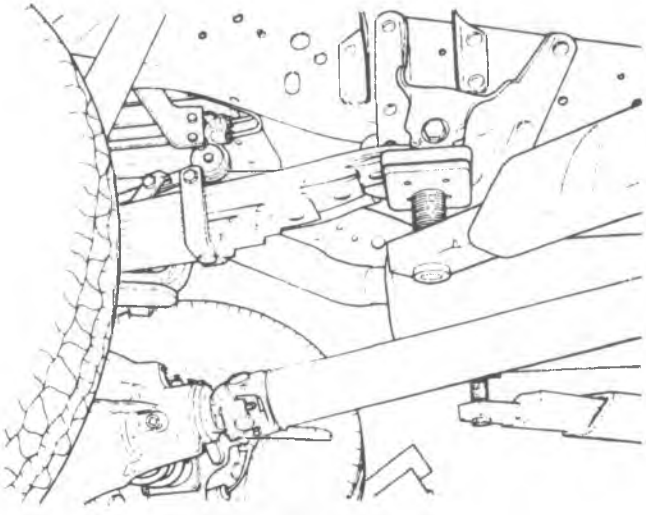

Rear, Right Side

L0474

Figure 15—Lifting the Vehicle—R Model

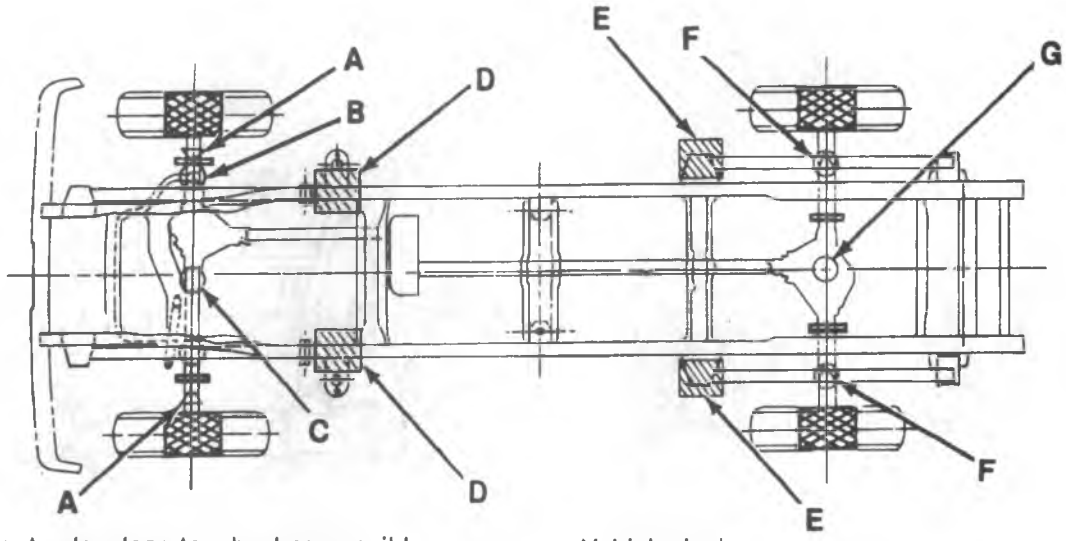

A. Front axle; close to wheel as possible.
B. Front axle; at stabilizer bar mount.
C. Front axle; at center.
D. Frame; at front body mount.
E. Rear spring at front mount.
F. Rear axle; at spring mount.
G. Rear axle, at center of differential.

Vehicle Jack or Floor Jack
Vehicle Jack
Floor Jack
Hoist
Two Column Hoist
Two Column Hoist

B7501

Figure 16—Chassis Lift Point—V Model

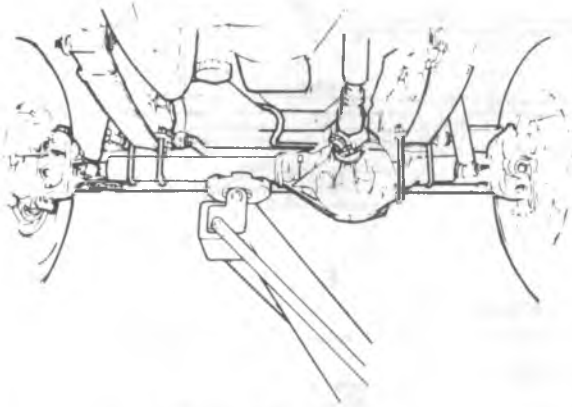

Front, Underside

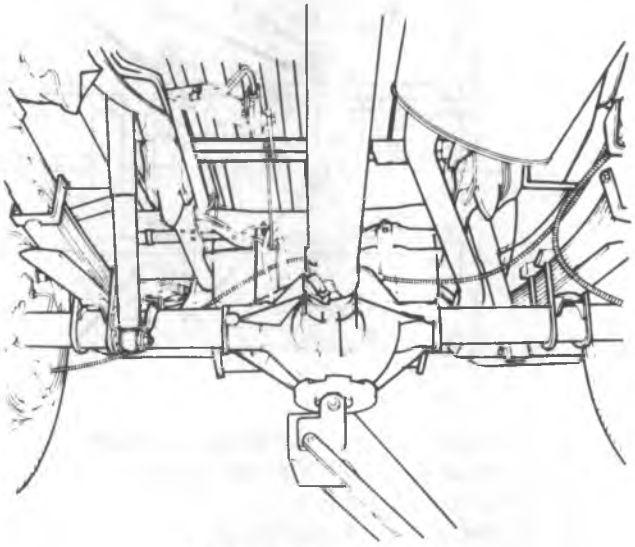

Rear, Underside

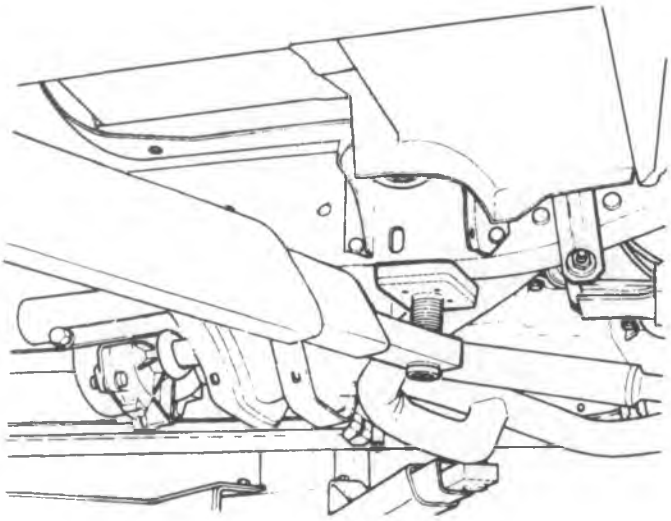

Front, Right Side

L0476

Figure 17—Lifting the Vehicle—V Model

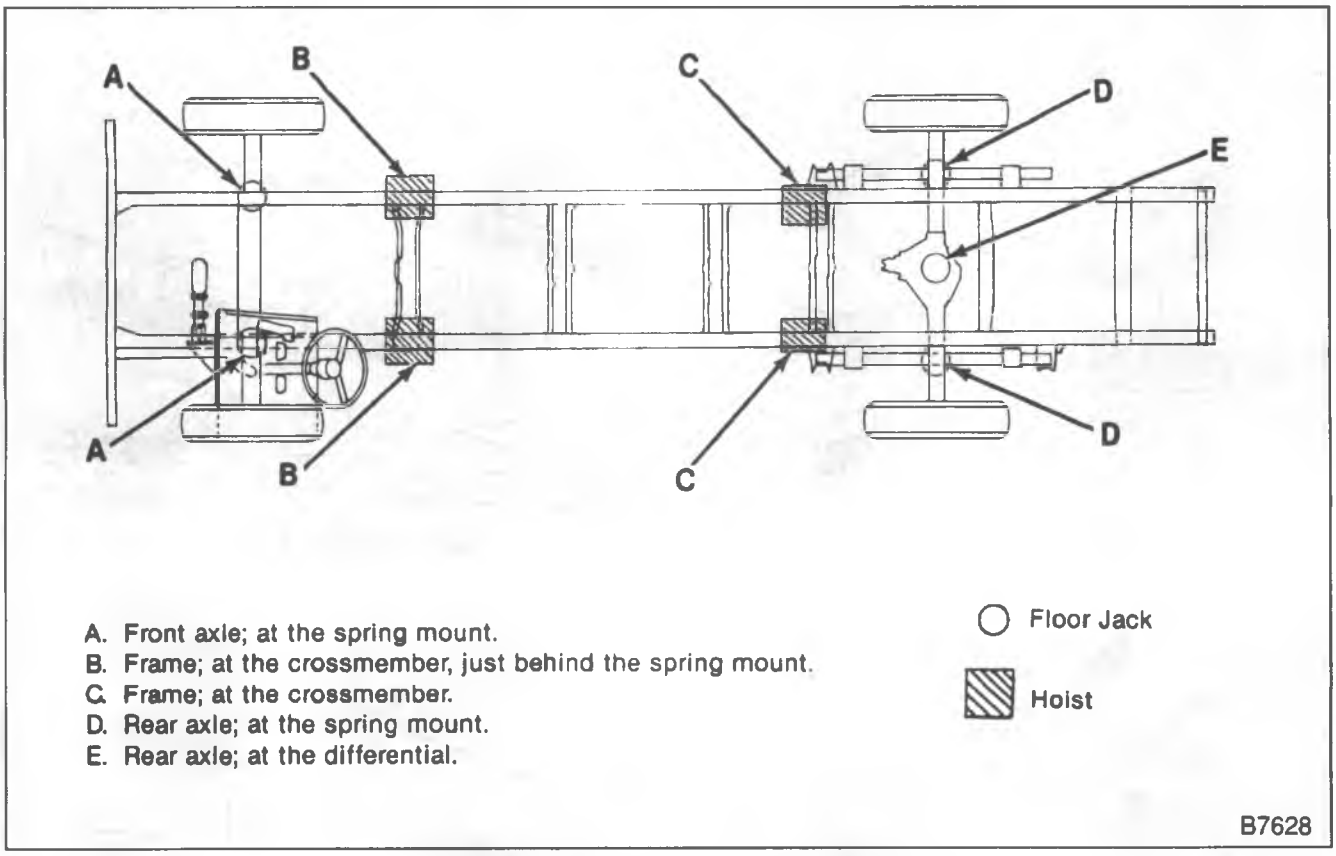

Figure 18—Chassis Lift Points—P Model

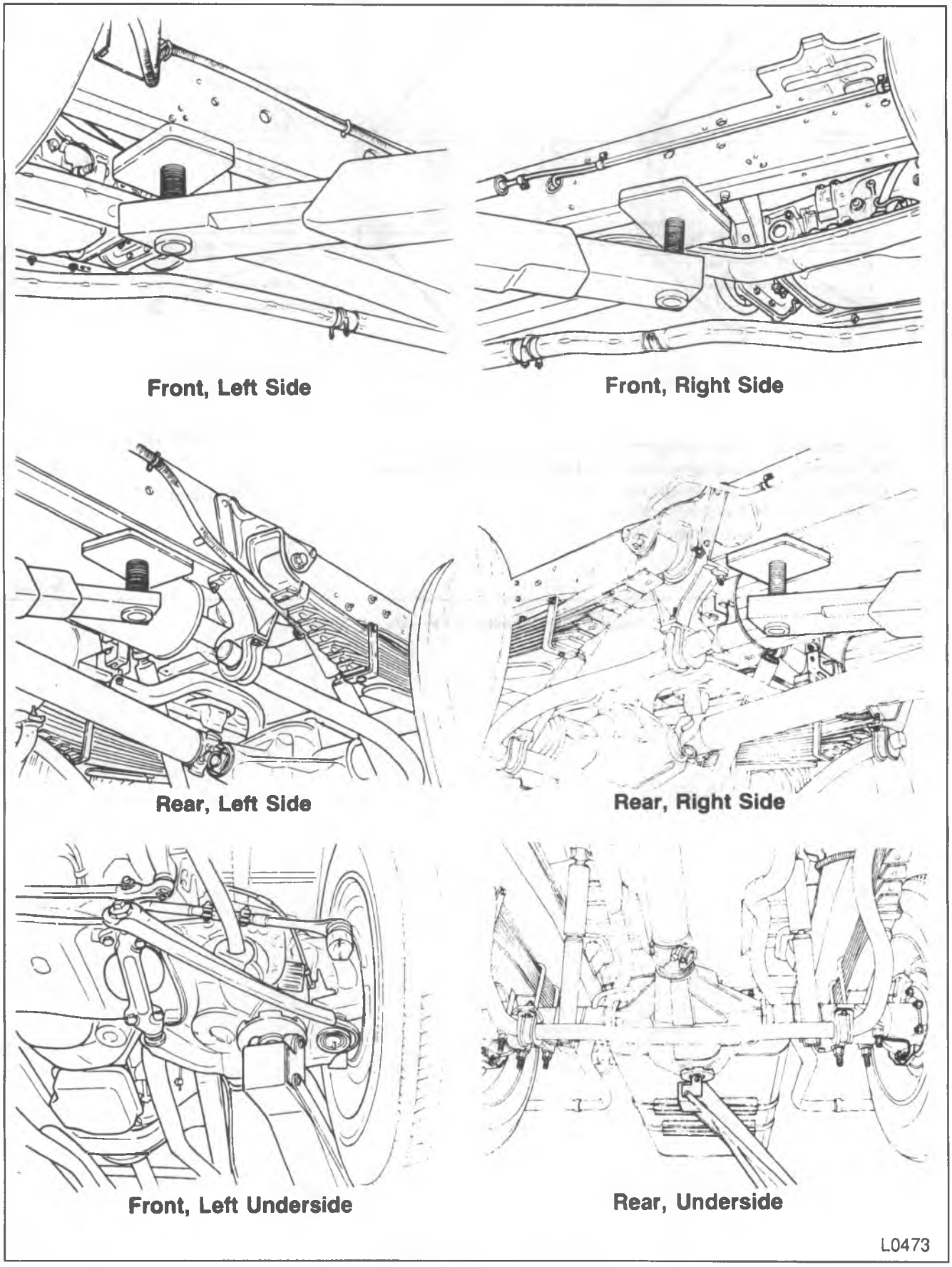

Figure 19—Lifting the Vehicle—P Model

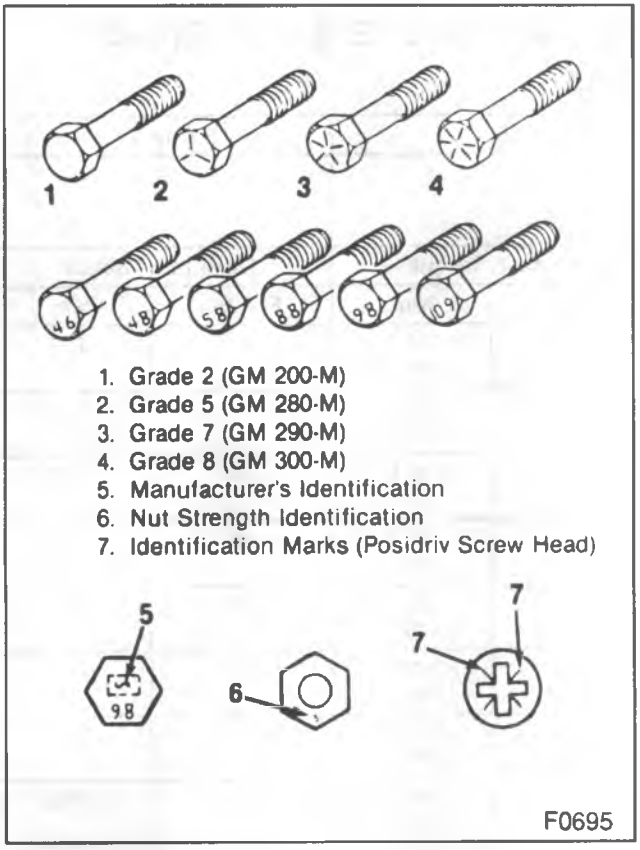

Figure 20—Bolt and Nut Identification

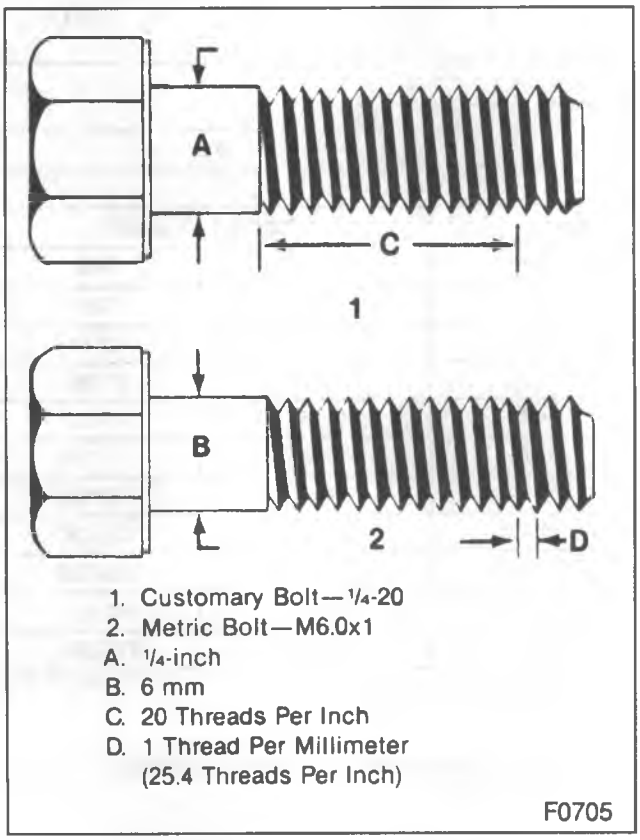

Figure 21—Thread Notation

FASTENER STRENGTH IDENTIFICATION

Most commonly used metric fastener strength property classes are 9.8 and 10.9 with the class identification embossed on the head of each bolt. Customary (inch) strength classes range from grade 2 to 8 with radial line identification embossed on each bolt head. Markings correspond to two lines less than the actual grade (i.e. grade 7 bolt will exhibit 5 embossed radial lines on the bolt head). Some metric nuts will be marked with single digit strength identification numbers on the nut face. Figure 20 shows the different strength markings.

When replacing metric fasteners, be careful to use bolts and nuts of the same strength or greater than the original fasteners (the same number marking or higher). It is likewise important to select replacement fasteners of the correct size. Correct replacement bolts metric fasteners available in the aftermarket parts channels were designed to metric standards of countries other than the United States, and may be of a lower strength, may not have the numbered head marking system, and may be of a different thread pitch. The metric fasteners used on GM products are designed to new, international standards that may not yet be manufactured by some non-domestic bolt and nut suppliers. In general, except for special application, the common sizes and pitches are:

M 6.0 x 1 M 10 x 1.5
M 8 x 1.25 M 12 x 1.75

PREVAILING TORQUE FASTENERS

A prevailing torque nut is designed to develop an interference between the nut and bolt threads. This is most often accomplished by distortion of the top of an all-metal nut by using a nylon patch on the threads in the middle of the hex flat. A nylon insert may also be used as a method of interference between nut and bolt threads (figure 22).

A prevailing torque bolt is designed to develop an interference between bolt and nut threads, or the threads of a tapped hole. This is accomplished by distorting some of the threads or by using a nylon patch or adhesive (figure 22).

RECOMMENDATIONS FOR REUSE:

1. Clean, unrusted prevailing torque nuts and bolts may be reused as follows:
   a. Clean dirt and other foreign material off the nut or bolt.
   b. Inspect the nut or bolt to insure there are no cracks, elongation, or other signs of abuse or overtightening. (If there is any doubt, replace with a new prevailing torque fastener of equal or greater strength.)
   c. Assemble the parts and hand start the nut or bolt.
   d. Observe that, before fastener seats, it develops torque per the chart in figure 22 (if there is any doubt, replace with a new prevailing torque fastener of equal or greater strength).
   e. Tighten the fastener to the torque specified in the appropriate section of this manual.
2. Bolts and nuts which are rusty or damaged should be replaced with new parts of equal or greater strength.

STANDARD TORQUE SPECIFICATIONS AND FASTENER MARKINGS

U.S. Bolts

SAE Grade Number	1 or 2		5		6 or 7	
Number of lines always 2 less than the grade number.						
Bolt Size (Inches)—(Thread)	Maximum Torque		Maximum Torque		Maximum Torque	
	Ft./Lbs.	N·m	Ft./Lbs.	N·m	Ft./Lbs.	N·m
1/4—20	5	6.8	8	10.8	10	13.5
—28	6	8.1	10	13.6		
5/16—18	11	14.9	17	23.0	19	25.8
—24	13	17.6	19	25.7		
3/8—16	18	24.4	31	42.0	34	46.0
—24	20	27.1	35	47.5		
7/16—14	28	37.0	49	66.4	55	74.5
—20	30	40.7	55	74.5		
1/2—13	39	52.8	75	101.7	85	115.2
—20	41	55.6	85	115.2		
9/16—12	51	69.2	110	149.1	120	162.7
—18	55	74.5	120	162.7		
5/8—11	83	112.5	150	203.3	167	226.5
—18	95	128.8	170	230.5		
3/4—10	105	142.3	270	366.0	280	379.6
—16	115	155.9	295	400.0		
7/8— 9	160	216.9	395	535.5	440	596.5
—14	175	237.2	435	589.7		
1— 8	236	318.6	590	799.9	660	894.8
—14	250	338.9	660	849.8		

Metric Bolts

Relative Strength Marking	4.6, 4.8		8.8	
Bolt Markings				
Bolt Size Thread Size x Pitch (mm)	Maximum Torque		Maximum Torque	
	Ft./Lbs.	N·m	Ft./Lbs.	N·m
6 x 1.0	2-3	3-4	3-6	5-8
8 x 1.25	6-8	8-12	9-14	13-19
10 x 1.25	12-17	16-23	20-29	27-39
12 x 1.25	21-32	29-43	35-53	47-72
14 x 1.5	35-52	48-70	57-85	77-110
16 x 1.5	51-77	67-100	90-120	130-160
18 x 1.5	74-110	100-150	130-170	180-230
20 x 1.5	110-140	150-190	190-240	160-320
22 x 1.5	150-190	200-260	250-320	340-430
24 x 1.5	190-240	260-320	310-410	420-550

GMTB-3115-2A

In the absence of specific torques, the following chart can be used as a guide to the maximum safe torque of a particular size/grade of fastener.

- There is no torque difference for fine or coarse threads.
- Torque values are based on clean, dry threads. Reduce the value by 10% if threads are oiled prior to assembly.
- The torque required for aluminum components or fasteners is considerably less.

Figure 22—Torque Nuts and Bolts Chart

SIX LOBED SOCKET HEAD FASTENERS

Six lobed socket head fasteners are used in some applications on vehicles covered in this manual (figure 23). The door striker bolt is of this design.

Tools designed for these fasteners are available commercially. However, in some cases, if the correct tool is not available, a hex socket head wrench may be used.

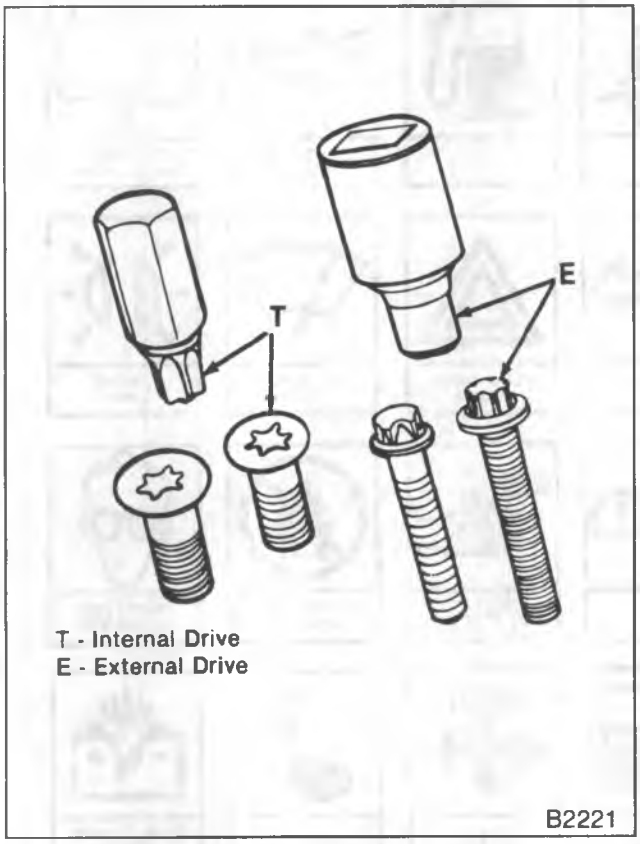

Figure 23—Six Lobed Socket Head Fastener

ANTICORROSION TREATMENT

Refer to SHEET METAL (SEC. 2B).

ELECTROSTATIC DISCHARGE

NOTICE: When handling an electronic part that has an esd sensitive sticker (see figure 24), the service technician should follow these guidelines to reduce any possible electrostatic charge build-up on the service technician's body and the electronic part in the dealership:

1. Do not open package until it is time to install the part.
2. Avoid touching electrical terminals of the part.
3. Before removing the part from its package, ground the package to a known good ground on the car.
4. Always touch a known good ground before handling the part. This should be repeated while handling the part and more frequently after sliding across the seat, sitting down from a standing position or walking a distance.

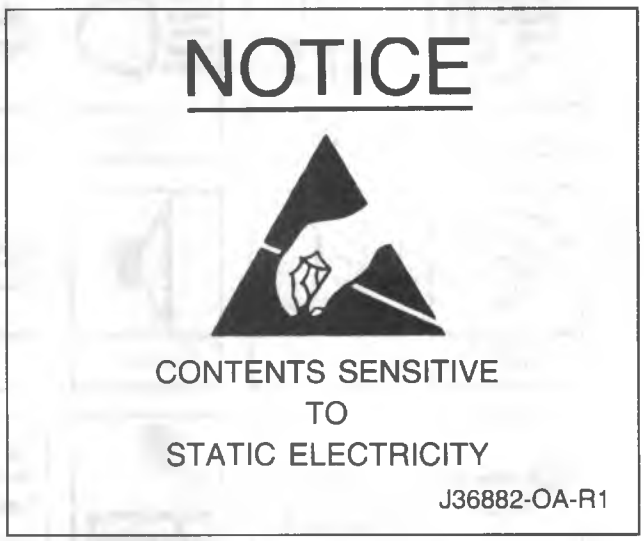

Figure 24—Electrostatic Discharge Label

GRAPHIC SYMBOLS

Graphic symbols are used on some controls and displays on the vehicle (figure 25). Many of these symbols are used internationally.

Figure 25 – Graphic Symbols

CONVERSION TABLE

Multiply	by	to get equivalent number of:
LENGTH		
Inch	25.4	millimeters (mm)
Foot	0.304 8	meters (m)
Yard	0.914 4	meters
Mile	1.609	kilometers (km)
AREA		
Inch^2	645.2	millimeters^2 (mm^2)
	6.45	centimeters^2 (cm^2)
Foot^2	0.092 9	meters^2 (m^2)
Yard^2	0.836 1	meters^2
VOLUME		
Inch^3	16.387	mm^3
	16.387	cm^3
	0.016 4	liters (l)
Quart 0.946 4	liters	
Gallon	3.785 4	liters
Yard^3	0.764 6	meters^3 (m^3)
MASS		
Pound	0.453 6	kilograms (kg)
Ton	907.18	kilograms (kg)
Ton	0.907	tonne (t)
FORCE		
Kilogram	9.807	newtons (N)
Ounce	0.278 0	newtons
Pound	4.448	newtons
TEMPERATURE		
Degree Fahrenheit	(†°F-32) ÷ 1.8	degree Celsius (C)

Multiply	by	to get equivalent number of:
ACCELERATION		
Foot/sec^2	0.304 8	meter/sec^2 (m/s^2)
Inch/sec^2	0.025 4	meter/sec^2
TORQUE		
Pound-inch	0.112 98	newton-meters (N·m)
Pound-foot	1.355 8	newton-meters
POWER		
Horsepower	0.746	kilowatts (kW)
PRESSURE OR STRESS		
Inches of water	0.249 1	kilopascals (kPa)
Pounds/sq. in	6 895	kilopascals
ENERGY OR WORK		
BTU	1 055	joules (J)
Foot-pound	1.355 8	joules
Kilowatt-hour	3 600 000 or 3.6 x 10^6	joules (J $ one W)
LIGHT		
Foot candle	1.076 4	lumens/meter^2 (lm/m^2)
FUEL PERFORMANCE		
Miles/gal	0.425 1	kilometers/liter (km/l)
Gal/mile	2.352 7	liter/kilometer (l/km)
VELOCITY		
Miles/hour	1.609 3	kilometers/hr. (km/h)

Figure 26—Conversion Table

B5497

DECIMAL AND METRIC EQUIVALENTS

Fractions	Decimal In.	Metric mm	Fractions	Decimal In.	Metric mm
1/64	0.015625	0.39688	33/64	0.515625	13.09687
1/32	0.03125	0.79375	17/32	0.53125	13.49375
3/64	0.046875	1.19062	35/64	0.546875	13.89062
1/16	0.0625	1.58750	9/16	0.5625	14.28750
5/64	0.078125	1.98437	37/64	0.578125	14.68437
3/32	0.09375	2.38125	19/32	0.59375	15.08125
7/64	0.109375	2.77812	39/64	0.609375	15.47812
1/8	0.125	3.1750	5/8	0.625	15.87500
9/64	0.140625	3.57187	41/64	0.640625	16.27187
5/32	0.15625	3.96875	21/32	0.65625	16.66875
11/64	0.171875	4.36562	43/64	0.671875	17.06562
3/16	0.1875	4.76250	11/16	0.6875	17.46250
13/64	0.203125	5.15937	45/64	0.703125	17.85937
7/32	0.21875	5.55625	23/32	0.71875	18.25625
15/64	0.234375	5.95312	47/64	0.734375	18.65312
1/4	0.250	6.3500	3/4	0.750	19.05000
17/64	0.265625	6.74687	49/64	0.765625	19.44687
9/32	0.28125	7.14375	25/32	0.78125	19.84375
19/64	0.296875	7.54062	51/64	0.796875	20.24062
5/16	0.3125	7.93750	13/16	0.8125	20.63750
21/64	0.328125	8.33437	53/64	0.828125	21.03437
11/32	0.34375	8.73125	27/32	0.84375	21.43125
23/64	0.359375	9.12812	55/64	0.859375	21.82812
3/8	0.375	9.52500	7/8	0.875	22.22500
25/64	0.390625	9.92187	57/64	0.890625	22.62187
13/32	0.40625	10.31875	29/32	0.90625	23.01875
27/64	0.421875	10.71562	59/64	0.921875	23.41562
7/16	0.4375	11.11250	15/16	0.9375	23.81250
29/64	0.453125	11.50937	61/64	0.953125	24.20937
15/32	0.46875	11.90625	31/32	0.96875	24.60625
31/64	0.484375	12.30312	63/64	0.984375	25.00312
1/2	0.500	12.7000	1	1.00	25.40000

B7676

Figure 27—Decimal and Metric Equivalents

RPO LISTING (REGULAR PRODUCTION OPTION)

The RPO list contains RPOs used on R/V Models and Forward Control Chassis Models. Refer to the Service Parts Identification Label for a list of the RPOs used on each specific vehicle.

AA3 Windows – Deep Tint, Side Windows Only
AC2 Window – Sliding, Right Front Door
AD5 Window – Right Rear, Side, Sliding
AD8 Door Check
AE7 Seat – Front, Split
AJ1 Window – Deep Tint, Except Windshield and Doors
AM7 Seat – Right Rear Folding
ANL Air Dam w/fog lamps
AP7 Partition – Sliding Plywood
AQ3 Seat – Rear Center
AQ4 Seat – Rear
AQ9 Seat – Frt Bkt-Pass, Driver, Reel
AS1 Seat – Frt Bkt-High Back-Driver
AS3 Seat – Right Rear, Suburban
AT5 Seat – Center Folding, Suburban
AU2 Lock – Cargo Door
AU3 Power Lock – Side Door
AV5 Seat – High Back, Bucket
AW4 Door – Sliding Side Extension
AX5 Partition – Expanded Metal w/Center Sliding Door
AX6 Partition – Expanded Metal w/RH Sliding Door
AX7 Partition – Expanded Metal w/Center Sliding Door
AX8 Seat – Frt Bkt, Pedestal, Driver
AX9 Latch – Rear Cargo Door
A01 Window – Tinted, All Shaded Windshield
A02 Windshield – Tinted, Shaded Upper
A07 Window – Body
A08 Window – Body, Right Side
A12 Window – Stationary, Back Door
A13 Window – Stationary, Side Rear Door
A17 Window – Left Side Swing-Out
A18 Window – Rear Door, Swing-Out
A19 Glass – Side Rear Door, Swing-Out
A20 Window RR Quarter Vent, Swing-Out
A28 Window – Right Rear, Full Width, Sliding
A31 Window – Side, Power
A33 Window – Tailgate, Power
A50 Seat – Front Bucket
A51 Seat – Front Bucket
A52 Seat – Front Bench
A57 Seat – Auxiliary, One Passenger, Folding
A82 Head Restraints
A95 Seat – Front Bucket, High Back, Reclining
BA8 Compartment – Front Seat Storage
BB5 Interior Headliner
BF3 Floor Covering – Step Well Mat
BG9 Floor Covering, Rubber
BW2 Ornamentation – Deluxe Body Side Molding
B3D School Bus Equipment
B3J Diesel Equipment
B30 Floor Carpet
B3M School Bus, Deluxe
B3V Equipment Control, Non School Bus
B32 Floor Mats – Front
B33 Floor Mats – Rear
B84 Exterior Molding – Body Side
B85 Exterior Molding – Belt Reveal
B93 Exterior Molding – Door Edge Guard
B96 Exterior Molding – Wheel Opening
CD4 Wiper System – Pulse
C7A GVW Rating – 10000
C36 Heater – Auxiliary
C42 Heater – Deluxe Outside Air
C49 Defogger – Rear Window, Electric
C55 Vent – Roof
C56 Vent – Forced Air, Right Side
C60 Air Conditioning – Front Manual Controls
C69 Air Conditioner – Roof Mounted
C91 Lamp – Interior Courtesy
C95 Lamp – Interior Courtesy, Dual Reading
DF1 Mirror – Camper Type, Painted
DF2 Mirror – Camper Type, SST
DG5 Mirror – West Coast Type
DT4 Ashtray – Cigarette Lighter
D20 Sunshade – Windshield, Passenger Side
D34 Mirror – Visor Vanity
D44 Mirror – Outside, Painted
D45 Mirror – Outside, SST
D46 Mirror – West Coast Type with Clearance Lights
D49 Mirror – Chrome
D73 Pickup Box Hand Rail
D92 Stripe – Lower Decor
E24 Door – Cargo Side, Hinged
E31 Body – Steel, 10 ft.
E34 Body – Steel, 10 ft. Standard Width
E36 Body – Aluminum, 10 ft.
E38 Body – Steel, 12 ft. x 8 ft.
E39 Body – Aluminum, 12 ft. x 8 ft.
E46 Door – 66 in., Overhead Sliding w/Window
E52 Door RR – 83 Inch Wrap-Around
E53 Door – 87 in., Wrap-Around
E55 End Gate, Suburban
E62 Pickup Box – Stepside (Fenderside)
E63 Pickup Box – Fleetside (Wideside)

E70 Wheel Housing, RR Dual Wheels
E71 Floor Cargo, Steel
E76 Door – 60 in., Rear
E79 Door – 74 in., Rear, Strap Hinges
E89 Panel Cab, Drivers Dr. Opening Filler w/Window
E94 Rally (Beauville) Equipment
F01 Frame – Heavy Duty
F42 Suspension – Front Heavy Duty
F51 Shock Absorbers – Front and Rear, Heavy Duty
F53 Axle – Front 5000 Lbs. I-Beam Construction
F58 Stabilizer – Front, Heavy Duty Bar
F59 Stabilizer Shaft – Front
F60 Spring – Front, Heavy Duty, Air Bag
F66 Suspension System Frt Air Bag and Seats, HD
G50 Spring – Rear, Heavy Duty
G51 Spring – Rear, Special Heavy
G52 Spring – Rear 15000 lbs.
G60 Spring – Rear Auxiliary
G80 Axle – Rear, Limited Slip
HA3 Axle – Rear 5.29 Ratio, Single Speed
HC4 Axle – Rear 4.56 Ratio 5500 Lbs. Single Speed
HC7 Axle – Rear 5.13 Ratio, 7500 Lbs. Single Speed
HF7 Axle – Rear 4.56 Ratio 10000 Lbs. Dana 70 Single Speed
HF8 Axle – Rear 4.88 Ratio
KC4 Engine Oil Cooler System
KL7 Gas Conversion – LP
K05 Engine Block Heater
K09 Generator – 120 Amp
K22 Generator – 94 Amp
K34 Cruise Control
K46 Air Cleaner – Heavy Duty, Pre-Cleaner
K60 Generator – 100 Amp
K68 Generator – 105 Amp
K81 Generator – 66 Amp
K99 Generator – 85 Amp
LB4 Engine – 4.3L V6 TBI
LH6 Engine – 6.2L V8, Diesel
LL4 Engine – 6.2L V8, Heavy Duty Emissions
L03 Engine – 5.0L V8 TBI
L05 Engine – 5.7L V8 TBI
L19 Engine – 7.4L V8 TBI
MD8 Transmission – Auto. 4 Speed, 4L60
MT1 Transmission – Auto. 4 Speed, 4L80-E
MT8 Transmission – Manual 5 Speed
M20 Transmission – Manual 4 Speed, Model 117
NA1 Emission System – Light Duty
NA4 Emission System – Heavy Duty
NA5 Emission System – Federal Requirements
NA6 Emission System – High Altitude Requirements
NB2 Emission System – California Requirements
NE2 Fuel Tank – 40 gal.
NK7 Fuel Tank – 31 gal.
NL2 Fuel Tank – Auxiliary
NL7 Fuel Tank – 33 gal.
NM5 Emission System – Canadian Requirement
NM8 Emission System – Leaded Fuel
NN4 Fuel Tank 227L 60 Gal
NY1 Fuel Tank Shield
N05 Fuel Filler Cap Lock
N31 Steering Wheel – Custom
N33 Steering Column – Tilt
N40 Steering – Non-Variable
N41 Steering – Power
N51 Steering – Manual
N67 Wheel – Rally Type
N90 Wheel – Aluminum Cast
PA1 Wheel – Trim Discs, Var. 5
PA6 Wheel – Styled, Painted
PF2 Wheel – 15 x 7 Aluminum
P01 Wheel – Trim Discs, Var. 1
P10 Carrier – Spare Tire
P11 Carrier – Spare Tire, Glide Out
P13 Carrier – Spare Tire, Side-mount
P14 Carrier – Inside Mounted Spare Tire, Left Side
P15 Carrier – Inside Mounted Spare Tire, Right Side
P17 Cover – Spare Wheel/Tire
QE6 Wheel – 16.5 x 6
R05 Wheel Conversion – Dual Rear
TP2 Battery – Auxiliary Camper
TR9 Lamp Group
TT4 Headlamps – Halogen, Pencil Beam
TT5 Headlamps – Halogen
TVR Lamp – Rear Dome and Reading
T63 Headlamps – Warning System
T84 Headlamps – Right Rule
T85 Headlamps – Left Rule
UA1 Battery – High Capacity
UB4 Lamps – Rear Side Marker
UD4 Alarm – Vehicle Speed
UF2 Lamp – Cargo
UJ1 Indicator System, Brake Warning
UM6 Radio – AM/FM Stereo, Seek/Scan, Cassette, Clock
UM7 Radio – AM/FM Stereo, Seek/Scan, Clock
UN3 Radio – AM/FM Stereo, Cassette
UT5 Radio – AM, Clock, ETR
UY1 Wiring Harness – Camper
UY7 Wiring Harness – Truck Trailer, Heavy Duty
UX1 Radio – AM Stereo, FM Stereo, Seek/Scan, Auto Rev Search, Repeat Cassette, Equalizer, Clock
U01 Lamp – Roof Marker

U18 Instrument Cluster – Metric
U19 Instrument Cluster – Metric and Customary Kilo Odometer
U35 Electric Clock
U37 Cigarette Lighter
U58 Radio – AM/FM Stereo
U63 Radio – AM
U66 Speaker System – Dual Front, Dual Rear
U69 Radio – AM/FM
U76 Antenna – Windshield
U89 Wiring Harness – Trailer
VE5 Bumper – Front and Rear Impact Strip
VF1 Bumper – Rear Chrome
VG3 Front Bumper Impact Strip
VG5 Rear Bumper Impact Strip
VR2 Trailer Hitch
VR4 Trailer Hitch – Weight Distributing
V01 Radiator – Heavy Duty
V02 Radiator – Heavy Duty w/Trans. Oil Cooler
V05 Radiator – Heavy Duty
V22 Radiator Grille – Chrome
V31 Bumper Guards – Front, Chrome
V35 Bumper, Rear w/Recessed Lighting
V37 Bumper – Front and Rear Chrome
V42 Bumper – Rear Step, Chrome
V43 Bumper – Rear Step, Painted
V46 Bumper – Front, Chrome
V76 Front Hook Towing Device
X6W Hub – Manual Locking
X6Z Hub – Automatic Locking
YE9 Equipment Package, Level 3
YG1 Molding, Body Side and Wheel Opening
YJ6 Decor Package – Econo
ZM2 Trim Package, Bonaventure
ZP3 Seating – Fifteen passenger
ZW9 Base Body or Chassis
ZY1 Color Combination – Solid
ZY2 Color Combination – Two Tone
ZY4 Color Combination – Deluxe Two Tone
Z53 Gage Package – Voltmeter, Oil Press. and Temp.
Z62 Equipment Package – Level 1
Z72 Trailering Package – L.D. Ball-Type Hitch
Z73 Trim – Special Interior
Z75 Shock Absorbers – Four Front
Z76 Special Chassis – Camper Package
Z80 Trim – Special Exterior
Z81 Camper – Special
Z82 Trailer Hitch – Special Reese Type
12A Stripe Accent – White
12K Color Combination – White (Auxiliary Top)
12L Secondary Color – White
12U Primary Color – White
15A Stripe Accent – Grey
18C Trim Combination – Charcoal, Stnd. Cloth
18D Trim Combination – Charcoal, Velour Cloth
18I Interior Trim – Charcoal
18V Trim Combination – Charcoal, Vinyl Striped
18W Trim Combination – Charcoal, Dual Grain Vinyl
19A Stripe Accent – Black and Grey Two Tone
19I Interior Trim – Black
19K Color Combination – Black (Auxiliary Top)
19L Secondary Color – Black
19U Primary Color – Black
19W Trim Combination – Black, Dual Grain Vinyl
21L Secondary Color – Lt. Blue Metallic
21U Primary Color – Lt. Blue Metallic
23D Trim Combination – Blue, Velour Cloth
23G Trim Combination – Blue Cloth
23I Interior Trim – Blue Vinyl
23V Trim Combination – Blue Vinyl Striped
23W Trim Combination – Blue Dual Grain Vinyl
28A Stripe Accent – Dk. Blue and Lt. Blue
28L Secondary Color – Dk. Blue Metallic
28U Primary Color – Dk. Blue Metallic
29A Stripe Accent – Dk. and Lt. Blue
29K Color Combination – Dk. Blue (Auxiliary Top)
29L Secondary Color – Dk. Blue
29U Primary Color – Dk. Blue
37L Secondary Color – Lt. Mesa Brown Metallic
37U Primary Color – Lt. Mesa Brown Metallic
44U Primary Color – Forest Green
55L Second Color – Russet Metallic
55U Primary Color – Russet Metallic
61K Color Combination – Tan (Auxiliary Top)
61L Secondary Color – Tan
61U Primary Color – Tan
62C Trim Combination – Lt. Saddle, Stnd. Cloth
62D Trim Combination – Lt. Saddle, Velour Cloth
62G Trim Combination – Saddle Cloth
62I Interior Trim – Lt. Saddle
62V Trim Combination – Lt. Saddle Vinyl, Striped
62W Trim Combination – Lt. Saddle, Dual Grain Vinyl
66K Color Combination – Dk. Brown
66L Secondary Color – Dk. Brown Metallic
66U Primary Color – Dk. Brown Metallic
67L Secondary Color – Lt. Saddle Metallic
67U Primary Color – Lt. Saddle Metallic
72A Stripe Accent – Bright Red
72L Secondary Color – Bright Red
72U Primary Color – Bright Red
76C Trim Combination – Bronze, Stnd. Cloth
76D Trim Combination – Bronze, Velour Cloth

76G	Trim Combination – Dk. Claret and Gold, Garnet Red
76I	Interior Trim – Bronze
76V	Trim Combination – Bronze, Striped Vinyl
76W	Trim Combination – Bronze, Duel Grain Vinyl
77C	Trim Combination – Dk. Maple, Stnd. Cloth
77D	Trim Combination – Dk. Maple, Velour Cloth
77G	Trim Combination – Dk. Maple Cloth
77I	Interior Trim – Dk. Maple
77V	Trim Combination – Dk. Maple Striped Vinyl
77W	Trim Combination – Dk. Maple, Dual Grain Vinyl
78U	Primary Color – Med. Rosewood Metallic
82D	Trim Combination – Med. Dk. Grey Velour Cloth
82G	Trim Combination – Med. Dk. Grey Cloth
82I	Interior Trim – Med. Dk. Grey
82W	Trim Combination – Dk. Grey, Dual Grain Vinyl
90K	Color Combination – Med. Grey (Auxiliary Top)
90L	Secondary Color – Grey Metallic
90U	Primary Color – Grey Metallic
93U	Primary Color – Lt. Driftwood Pearlmist
9V8	Color Combination – Cardinal Red

REGULAR PRODUCTION OPTIONS (RPO) – TIRES

AR	P195/75R15 All Seasons Steel Belted Radial
BK	LT245/75R16C All Seasons Steel Belted Radial
BL	LT245/75R16C All Seasons Steel Belted Radial Whitewall
BN	LT245/75R16C On-Off Road Steel Belted Radial
BX	LT245/75R16C On-Off Road Steel Belted Radial White Lettered
CE	P205/75R15 All Seasons Steel Belted Radial
CF	P205/75R15 All Seasons Steel Belted Radial White Lettered
CG	P205/75R15 All Seasons Steel Belted Radial Whitewall
CU	P215/75R15 All Seasons Steel Belted Radial
CV	P215/75R15 All Seasons Steel Belted Radial Whitewall
CW	P215/75R15 All Seasons Steel Belted Radial White Lettered
DE	7.50-16/D Highway Tubeless Nylon
DL	7.50-16/D On-Off Road Tubeless Nylon
ES	P235/75R15 On-Off Road Steel Belted Radial
ET	P225/75R15 All Seasons Steel Belted Radial
EU	P225/75R15 All Seasons Steel Belted Radial Whitewall
EV	P225/75R15 All Seasons Steel Belted Radial White Lettered.
FL	P235/75R15 All Seasons Steel Belted Radial
FM	P235/75R15 All Seasons Steel Belted Radial Whitewall
FN	P235/75R15 All Seasons Steel Belted Radial White Lettered
GK	LT245/75R16E On-Off Road Steel Belted Radial
GL	LT265/75R16C On-Off Road Steel Belted Radial
GM	LT265/75R16C On-Off Road Steel Belted Radial White Outline Lettered
HA	P235/75R15XL All Seasons Steel Belted Radial
HB	P235/75R15/XL All Seasons Steel Belted Radial Whitewall
HE	LT225/75R16C All Seasons Steel Belted Radial
HH	LT245/75R16E All Seasons Steel Belted Radial
HJ	LT225/75R16C On-Off Road Steel Belted Radial
HN	LT225/75R16C On-Off Road Steel Belted Radial White Outline Lettered
HP	LT225/75R16D All Seasons Steel Belted Radial
HQ	LT225/75R16D All Seasons Steel Belted Radial Whitewall
HR	LT225/75R16D On-Off Road Steel Belted Radial
HV	LT225/75R16C All Seasons Steel Belted Radial Whitewall
PB	7.50-16/C Highway Tube-Type Nylon
PC	7.50-16/C On-Off Road Tube-Type Nylon
PE	7.50-16/D Highway Polyester
PF	7.50-16/D Highway Tube-Type Nylon
PG	7.50-16/D On-Off Road Tube-Type Nylon
PK	7.50-16/E Highway Tube-Type Nylon
RQ	8.00-16.5/C Highway Polyester
RS	8.00-16.5/D Highway Polyester
RU	8.75R-16.5/D Highway Steel Belted Radial
SD	8.00-16.5/D Highway Nylon
SE	8-19.5/D On-Off Road Nylon
SF	8-19.5/D Highway Nylon
SG	8-19.5/E Highway Nylon
SN	8-19.5/D Highway Polyester
TH	8.75-16.5/E Highway Nylon
UZ	31 x 10.50R15LT/B On-Off Road Steel Belted Radial White Lettered
VD	8.75-16.5/E Highway Steel Belted Radial
YJ	LT215/85R16-C Highway Steel Belted Radial
YK	LT215/85R16-D Highway Steel Belted Radial
YL	LT215/85R16-D On-Off Road Steel Belted Radial
YM	LT235/85R16-D Highway Steel Belted Radial
YN	LT235/85R16-E Highway Steel Belted Radial
YT	LT235/85R16-E On-Off Road Steel Belted Radial

COMMON AUTOMOTIVE ABBREVIATIONS

AC – Alternating Current
A-6 – Axial 6 Cyl. A/C Compressor
A/C – Air Conditioning
ACCEL – Accelerator
ADJ – Adjust
A/F – Air Fuel Ratio
AIR – Air Injection Reaction System
ALCL – Assembly Line Communications Link
ALDL – Assembly Line Diagnostic Link
Alt – Altitude
AMP – Ampere(s)
ANT – Antenna
APS – Absolute Pressure Sensor
APT – Adjustable Part Throttle
ASM – Assembly
AT – Automatic Transmission
ATDC – After Top Dead Center
Auto – Automatic
BARO – Barometric
Bat – Battery
Bat + – Battery Positive Terminal
Bbl. – Barrel
BP – Back Pressure
BTDC – Before Top Dead Center
°C – Degrees Celsius
Calif. – California
Cat. Conv. – Catalytic Converter
CB – Citizens Band (Radio)
CCC – Computer Command Control
C-4 – Computer Controlled Catalytic Converter
CCOT – Cycling Clutch Orifice Tube
CCP – Controlled Canister Purge
C.E. – Check Engine
CEAB – Cold Engine Airbleed
CEMF – Counter Electromotive Force
CID – Cubic Inch Displacement
CL – Closed Loop
CLCC – CLosed Loop Carburetor Control
CLBTI – Closed Loop Throttle Body Injection
CO – Carbon Monoxide
Coax – Coaxial
Conn – Connector
Conv – Converter
CP – Canister Purge
CPS – Central Power Supply
Crank – Crankshaft
CTS – Coolant Temperature Sensor
Cu.In. – Cubic Inch
CV – Constant Velocity
Cyl – Cylinder(s)
C3I – Computer Controlled Ignition
DBB – Dual Bed Bead
DBM – Dual Bed Monolith
DC – Direct Current
DEFI – Digital Electronic Fuel Injection
DFI – Digital Fuel Injection
Diff – Differential
DIS – Direct Ignition System
Dist – Distributor
DVM – Digital Voltmeter (10 meg.)
EAC – Electric Air Control
EAS – Electric Air Switching
ECC – Electronic Comfort Control
ECM – Electronic Control Module
ECS – Emission Control System
ECU – Engine Calibration Unit (PROM)
EEC – Evaporative Emission Control
EECS – Evaporative Emission Control System
EEVIR – Evaporator Equalized Valves in Receiver
EFE – Early Fuel Evaporation
EFI – Electronic Fuel Injection
EGR – Exhaust Gas Recirculation
EGR/TVS – Exhaust Gas Recirculation/Thermostatic
EMF – Electromotive Force
EMR – Electronic Module Retard
EOS – Exhaust Oxygen Sensor
ESC – Electronic Spark Control
EST – Electronic Spark Timing
ETR – Electronically Tuned Receiver
EVRV – Electronic Vacuum Regulator Valve (EGR)
EXH – Exhaust
°F – Degrees Fahrenheit
FED – Federal (All States Except Calif.)
FMVSS – Federal Motor Vehicle Safety Standards
Ft.Lb. – Foot Pounds (Torque)
FWD – Four Wheel Drive
4x4 – Four Wheel Drive
GAL – Gallon
GEN – Generator
Gov – Governor
g – gram
Harn – Harness
HC – Hydrocarbons
HD – Heavy Duty
HEI – High Energy Ignition
Hg – Mercury
Hi.Alt. – High Altitude
HVAC – Heater-Vent-Air Conditioning

HVACM – Heater-Vent-Air Conditioning Module
HVM – Heater-Vent-Module
IAC – Idle Air Control
IC – Integrated Circuit
ID – Identification or Inside Diameter
IGN – Ignition
ILC – Idle Load Compensator
INJ – Injection
IP – Instrument Panel
IPC – Instrument Panel Cluster
INT – Intake
ISC – Idle Speed Control
km – kilometer
km/h – Kilometer per hour
km/L – Kilometers/Liter (MPG)
kPa – KiloPascals
KV – Kilovolts (thousands of volts)
L – Liter
L4 – Four Cylinder In-Line engine
L6 – Six Cylinder In-Line Engine
LF – Left Front
LR – Left Rear
MAF – Mass Air Flow
MAN – Manual
Man.Vac. – Manifold Vacuum
MAP – Manifold Absolute Pressure
MAT – Manifold Air Temperature
Max – Maximum
M/C – Mixture Control
Min – Minimum
mm – millimeter
MPG – Miles Per Gallon
MPH – Miles Per Hour
MT – Manual Transmission
MV – Millivolt
NC – Normally Closed
N•m – Newton Meters
NO – Normally Open
NOx – Nitrogen, Oxides of
OD – Outside Diameter
OHC – Overhead Cam
OL – Open Loop
O/2 – Oxygen
PAIR – Pulse Air Injection Reaction System
P/B – Power Brakes
PCV – Positive Crankcase Ventilation
PECV – Power Enrichment Control Valve
P/N – Park, Neutral
PRESS – Pressure
PROM – Programmable Read Only Memory
P/S – Power Steering
PSI – Pounds per Square Inch
Pt – Pint
PTO – Power Takeoff
Qt – Quart
R – Resistance
REF – Reference
R-4 – Radial Four Cyl. A/C Compressor
RF – Right Front
RFI – Radio Frequency Interference
RPM – Revolutions per Minute
RPO – Regular Production Option
RR – Right Rear
RTV – Room Temperature Vulcanizing
RVB – Rear Vacuum Break
RVR – Response Vacuum Reducer
RWD – Rear Wheel Drive
SAE – Society of Automotive Engineers
Sec – Secondary
SES – Service Engine Soon
SI – System International
SOL – Solenoid
SPEC – Specification
Speedo – Speedometer
T – Turbocharger
TAC – Thermostatic Air Cleaner
Tach – Tachometer
TBI – Throttle Body Injection
TCC – Transmission Converter Clutch
TCS – Transmission Controlled Spark
TDC – Top Dead Center
Term – Terminal
THERMAC – Thermostatic Air Cleaner
TEMP – Temperature
TPS – Throttle Position Sensor
TRANS – Transmission
Turbo – Turbocharger
TV – Throttle Valve
TVBV – Turbocharger Vacuum Bleed Valve
TVRS – Television & Radio Suppression
TVS – Thermal Vacuum Switch
U-Joint – Universal Joint
V – Volt(s)
V-6 – Six Cylinder Engine – Arranged in a "V"
V-8 – Eight Cylinder Engine – Arranged in a "V"
VAC – Vacuum
VATS – Vehicle Anti-Theft System
VIN – Vehicle Identification Number
VIR – Valve in Receiver
VMV – Vacuum Modulator Valve
VRV – Vacuum Reducer Valve

VSS – Vehicle Speed Sensor
w/ – With
W/B – Wheel Base
w/o – Without
WOT – Wide Open Throttle
X-Valve – Expansion Valve

LOCK CYLINDER CODING

KEY IDENTIFICATION

The lock cylinder keyway is designed so that other model keys will not enter a current model lock cylinder. Two non-interchangeable keys are used. The square headed key is used in the ignition lock cylinder. The oval headed key is used in all other lock cylinders.

Key identification is obtained from the four character key code stamped on the knockout portion of the key head and an identification letter stamped on the key shank. After the code number has been recorded by the owner, the plugs should be knocked out of the key head. From these numbers, the lock combination can be determined by use of a code list. This list is available to owners of key cutting equipment from equipment suppliers. If the key code numbers are not available from records or from the knockout plug, the lock combination (tumbler numbers and position) can be determined by laying the key on the diagram in figure 28.

CUTTING KEYS

1. Determine the code from the code list or the key code diagram (figure 28).
2. Cut a blank key to the proper level for each of six tumbler positions.
3. Check the key operation in the lock cylinder.

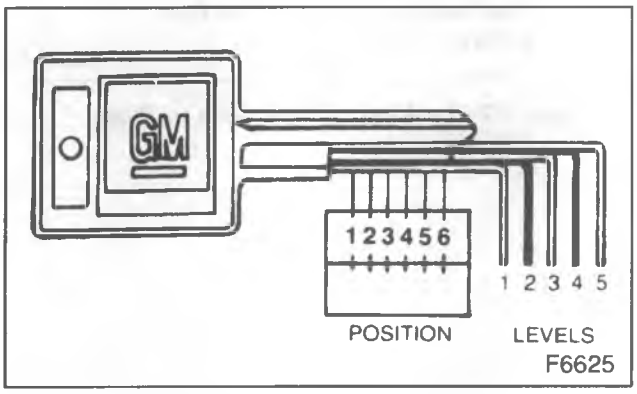

Figure 28 – Key Code Diagram

REPLACEMENT LOCK CYLINDERS

Lock cylinders are available from service parts warehouses. The new cylinder has a locking bar staked in place. Tumblers are also available and must be assembled into the cylinder.

ASSEMBLING AND CODING LOCK CYLINDERS

All Lock Cylinders Except Instrument Panel Compartment

Tumblers for all locks are shaped exactly alike with the exception of the notch position on one side. As the key is inserted in the lock cylinder, tumblers are lowered to the correct heights so that notches on each tumbler are at the same level. When the notches on all tumblers line up, the side bar is pushed into the notches by two small springs. This allows the cylinder to turn in its bore. Five types of tumblers are used to make the various lock combinations. Each tumbler is coded according to a number, 1 through 5, stamped on its side.

Assemble (Figures 28 and 29)

1. Determine the tumbler numbers and arrangement.
   a. With the numerical key code, use the code list provided by a key cutting equipment supplier.
   b. Without the numerical key code or without a code list, refer to figure 30.
      – Lay the key on the key code diagram. Be sure the key is outlined by the diagram.
      – Start with position number one. Find and record the lowest level (tumbler number) that is visible. Repeat for each of the remaining five positions.
2. Starting with position one (the open end or head of the cylinder), insert tumblers in their proper slots in the order called for by the code (figure 28 and 29).
3. Pull the side bar out so that the tumblers will drop completely into place.
4. Insert one tumbler spring above each tumbler.
5. Insert the spring retainer so that the end prongs slide into the slots at each end of the cylinder (figure 30). Press the retainer down.
6. Insert the key into the lock cylinder to check for proper installation. If the tumblers are installed properly, the side bar will drop down. If it doesn't, take the cylinder apart and reassemble it.

NOTICE: Use leather or wood at each vise jaw to prevent damage to the cylinder.

7. Remove the key and secure the cylinder in a vise with the spring retainer exposed.
8. Stake the spring retainer securely in place at each end. Use a suitable staking tool and stake the cylinder metal over the retainer (figure 30).
9. Lock cylinders should be lubricated with GM multipurpose lubricant PN 12345120 or with a light oil (5W30).

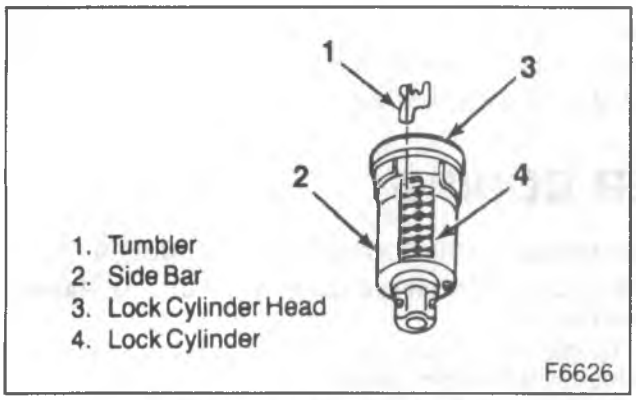

Figure 29 – Installing Tumblers

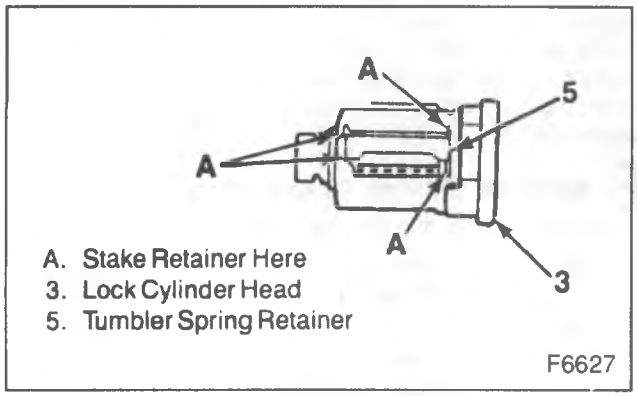

Figure 30 – Installing Spring Retainer

Instrument Panel Compartment Lock Cylinder

A lock cylinder with snap-in tumblers is used for the instrument panel compartment lock (figures 31 and 32). The lock cylinder has four or five tumbler positions. The number 1 or 2 position (closest to the cylinder head) is a brass retainer tumbler. The 2 through 5 positions or 3 through 5 positions are standard tumbler positions depending on cylinder type. Therefore, only the least 4 or 5 tumbler combinations are required. To assemble the lock cylinder, determine the tumbler numbers and arrangement as previously described and install the tumblers.

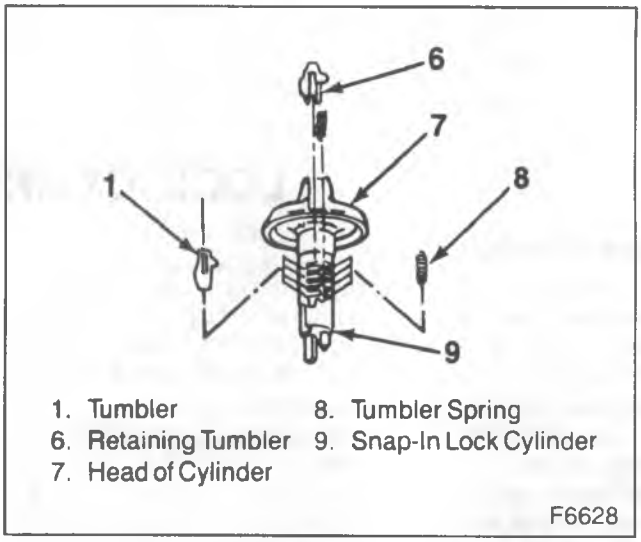

Figure 31 – Installing Tumblers

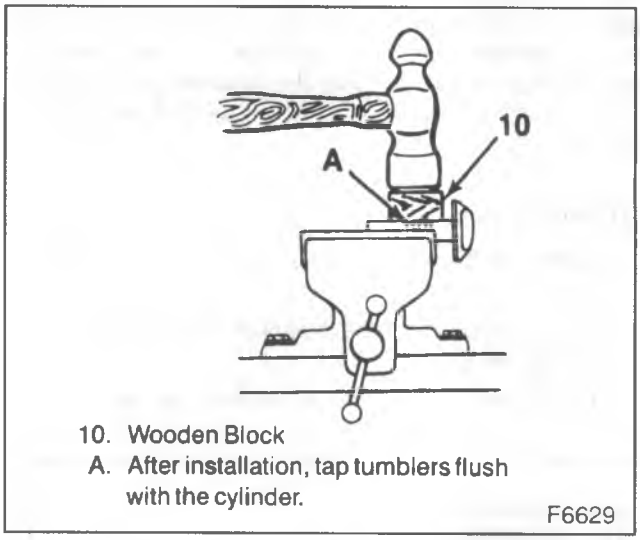

Figure 32 – Locking the Tumblers in Place

SECTION 0B

MAINTENANCE AND LUBRICATION

CONTENTS

SUBJECT	PAGE
Maintenance Schedule	0B-2
Selecting Your Vehicle's Maintenance	0B-3
Section A-Scheduled Maintenance Services	0B-5
Section B-Owner Inspection and Service	0B-15
Section C-Recommended Fluids and Lubricants	0B-17
Section E-Service Station Checks	0B-19
Capacities	0B-20
Lubrication	0B-23
Tire Pressure Charts	0B-24
Drive Belt Tension Specifications	0B-26
Service Replacement Part and Filter Recommendations	0B-28

MAINTENANCE SCHEDULE

The information shown on page 0B-1 through 0B-19 is the same as shown in the 1991 Light Duty Truck Maintenance Schedule.

1991 GENERAL MOTORS LIGHT DUTY TRUCK MAINTENANCE SCHEDULES

INTRODUCTION: A WORD ABOUT MAINTENANCE

This booklet covers the maintenance required for your General Motors vehicle. your vehicle needs these services to retain it's safety, dependability, and emission control performance.

We at General Motors want to help you keep your vehicle in good working condition. But we don't know exactly how you'll drive it. You may drive very short distances only a few times a week. Or you may drive long distances all the time in very hot, dusty weather. you may use your vehicle in making deliveries. Or you may drive it to work, to do errands, or in many other ways.

Because of all the different ways people use their GM vehicles, maintenance needs vary. You may even need more frequent checks and replacements than you will find in the schedules in this booklet. So please read this booklet and note how you drive. If you have any questions on how to keep your vehicle in good condition, see your GM dealer, the place many GM owners choose to have their maintenance work done. Your dealer can be relied upon to use proper parts and practices.

HOW THIS BOOKLET IS ORGANIZED

For your convenience, this booklet is divided into four parts. The first, section A, is Scheduled Maintenance Services. It shows what to have done, and how often. Some of these services can be complex, so unless you are technically qualified and have the necessary equipment, you should let your dealer's service department or another qualified service center do these jobs.

If you are skilled enough to do some work on your vehicle, you will probably want to get the service information GM publishes. You will find a list of publications and how to get them in your Owner's Manual.

Section B is Owner Inspections and Services. It explains what you can easily do to help keep your vehicle in good condition.

Section C is Recommended Fluids and Lubricants. Here you will find a list of what your vehicle needs for proper lubrication, whether you do it yourself or have the work done.

It is a good idea to keep your maintenance receipts, too. They may be needed to qualify your vehicle for warranty repairs.

Finally, Section E, at the back of the booklet, tells you what to check whenever you stop for fuel.

CAUTION: Performing maintenance work on a vehicle can be dangerous. In trying to do some jobs, you can be seriously injured. Do your own maintenance work only if you have the required know-how and the proper tools and equipment for the job. If you have any doubt, have a qualified technician do the work.

©1990 General Motors Corporation
All Rights Reserved.

Printed in U.S.A.

SECTION A — SCHEDULED MAINTENANCE SERVICES

This section tells you the maintenance services that you should have done and the times you should schedule them. Your GM dealer knows your vehicle best and wants you to be happy with it. If you go to your dealer for all your service needs, you'll get GM parts and GM-trained and supported service people.

These schedules are for vehicles that:

- carry passengers and cargo within the recommended limits. You will find these limits on your vehicle's Certification Label. Section 6 of your Owner's Manual will help you find the label.
- are driven on regular road surfaces, and within legal driving limits, as described in Section 4 of your Owner's Manual.
- are driven off-road in the recommended manner, as described in section 4 of your Owner's Manual.
- use the proper fuel as described in Section 6 of your Owner's Manual.

SELECTING YOUR VEHICLE'S MAINTENANCE SERVICES

To find the proper maintenance schedule for your vehicle, you must know two things. What engine your vehicle has, and how you use your vehicle. Your engine type will tell you which chart to use, and your driving conditions will tell you which schedule on the chart to use.

Selecting the Proper Maintenance Chart

Your engine type and it's emissions classification (Light Duty or Heavy Duty Emissions) will tell you which maintenance chart to use. Find your Vehicle Identification Number (VIN), and look at the eighth character to see what your engine code is. Then use the following Engine Emissions Classifications chart to find your emissions classification.

- Your VIN is on the plate on the top left corner of your instrument panel, the Certification Label and on the Service Parts Identification Label.
- If your engine has more than one emissions classification, look at your Certification Label to see what your Gross Vehicle Weight Rating (GVWR) is.

Section 6 of your Owner's Manual can help you find these items.

ENGINE EMISSIONS CLASSIFICATION		
VIN Code	Engine Description	Emissions
E	2.5L L4/TBI	LD
R	2.8L V6/TBI	LD
Z	4.3L V6/TBI	
	with 8500 GVWR and below	LD
	with 9501 GVWR and above	HD
	Forward Control Chassis	HD
B	4.3L V6/TBI/HO	LD
H	5.0L V8/TBI	LD
K	5.7L V8/TBI	
	with 8500 GVWR and below	LD
	with 8501 GVWR and above	HD
	Forward Control Chassis	HD
	High Cube/Cutaway Van	HD
C	6.2L V8/Diesel	LD
J	6.2L V8/Diesel	HD
N	7.4L V8/TBI	
	Except 454 SS Model	HD
	with 454 SS Model	LD
		M0002

NOTE: TBI is a throttle body injection system.

Selecting the Proper Maintenance Schedule

Here is how to tell which schedule to follow once you find the proper maintenance chart to use.

MAINTENANCE SCHEDULE I

Is any one of these true for your vehicle?

- Most trips are less than 4 miles (6 kilometers).
- Most trips are less than 10 miles (16 kilometers) and the outside temperatures are below freezing.
- The engine is at low speed most of the time (as stop-and-go traffic, door-to-door delivery, or other commercial uses).
- You operate in dusty areas or off-road frequently.
- You tow a trailer

If any one (or more) of these is true for your driving, follow Schedule I. Schedule I is shown by a plus sign (+) on the chart.

MAINTENANCE SCHEDULE II

Follow Schedule II ONLY if none of the above conditions is true. Schedule II is shown by a dot (•) on the chart.

SECTION A—SCHEDULED MAINTENANCE SERVICES FOR GASOLINE ENGINES WITH LIGHT DUTY EMISSIONS†

Item No.	Service	Miles (000) / Kilometers (000)	3 / 5	6 / 10	7.5 / 12.5	9 / 15	12 / 20	15 / 25	18 / 30
	If your driving conditions meed those specified on page 5, use Maintenance Schedule I (+).								
1	Engine Oil Change* —Every 3 Months, or		+	+		+	+	+	+
	—Every 12 Months, or				•			•	
	Oil Filter Change* —Every 3 Months, or		+	+		+	+	+	+
	—Every 12 Months, or				•				
2	Chassis Lubrication—Every 12 Months, or		+	+	•	+	+	+•	+
3	Clutch Fork Ball Stud Lubrication								
5	Cooling System Service*—Every 24 Months or								
6	Air Cleaner Element Replacement*								
7	Front Wheel Bearing Repack (2WD Only)							+	
8	Transmission Service—See page 15								
9	PCV System Inspection*								
11	Fuel Filter Replacement*								
12	Spark Plugs Replacement*								
13	Spark Plug Wire Inspection*								
15	Electronic Vacuum Regulator Valve (EVRV) Inspection*								
16	Engine Timing Check*								
17	Fuel Tank, Cap and Lines Inspection*								
19	Engine Accessory Drive Belt(s) Inspection*								
25	Tire and Wheel Rotation—See page 16								
27	Drive Axle Service		+	+	•	+	+	+•	+
28	Brake Systems Inspection—See page 17								

FOOTNOTES:
*An Emission Control Service
†To determine the emissions classification of your engine refer to page 4.

M0003

Item No.	Service	Miles (000) / Kilometers (000)	21 / 35	22.5 / 37.5	24 / 40	27 / 45	30 / 50	33 / 55	36 / 60	37.5 / 62.5	39 / 65	42 / 70	45 / 75	48 / 80	51 / 85	52.5 / 87.5	54 / 90	57 / 95	60 / 100
	If your driving conditions do NOT meed those specified on page 5, use Maintenance Schedule II (•).																		
1	Engine Oil Change* —Every 3 Months, or		+		+	+	+	+	+		+	+	+	+	+		+	+	+
	—Every 12 Months, or			•			•			•			•			•			•
	Oil Filter Change* —Every 3 Months, or		+		+	+	+	+	+		+	+	+	+	+		+	+	+
	—Every 12 Months, or			•						•						•			
2	Chassis Lubrication—Every 12 Months, or		+	•	+	+	+•	+	+	•	+	+	+•	+	+	•	+	+	+•
3	Clutch Fork Ball Stud Lubrication						+•												+•
5	Cooling System Service*—Every 24 Months or						+•												+•
6	Air Cleaner Element Replacement*						+•												+•
7	Front Wheel Bearing Repack (2WD Only)						+•						+						+•
8	Transmission Service—See page 15																		
9	PCV System Inspection*																		+•
11	Fuel Filter Replacement*						+												+•
12	Spark Plugs Replacement*						+•												+•
13	Spark Plug Wire Inspection*																		+•
15	Electronic Vacuum Regulator Valve (EVRV) Inspection*																		+•
16	Engine Timing Check*																		+•
17	Fuel Tank, Cap and Lines Inspection*						+												+•
19	Engine Accessory Drive Belt(s) Inspection*																		+•
25	Tire and Wheel Rotation—See page 16																		
27	Drive Axle Service		+	•	+	+	+•	+	+	•	+	+	+•	+	+	•	+	+	+•
28	Brake Systems Inspection—See page 17																		

THE SERVICES SHOWN ON THIS CHART UP TO 60,000 MILES (100 000 km) ARE TO BE DONE AFTER 60,000 MILES AT THE SAME INTERVALS.

M0004

SECTION A—SCHEDULED MAINTENANCE SERVICES FOR GASOLINE ENGINESWITH HEAVY DUTY EMISSIONS†

If your driving conditions met those specified on page 5, use Maintenance Schedule I (+). (columns 3–12)

If your driving conditions do NOT met those specified on page 5, use Maintenance Schedule II (•). (columns 15–60)

Item No.	Service		3	6	9	12	15	18	21	24	27	30	33	36	39	42	45	48	51	54	57	60
		Miles (000)	**3**	**6**	**9**	**12**	**15**	**18**	**21**	**24**	**27**	**30**	**33**	**36**	**39**	**42**	**45**	**48**	**51**	**54**	**57**	**60**
		Kilometers (000)	**5**	**10**	**15**	**20**	**25**	**30**	**35**	**40**	**45**	**50**	**55**	**60**	**65**	**70**	**75**	**80**	**85**	**90**	**95**	**100**
1	Engine Oil Change* —Every 3 Months, or		+	+	+	+	+	+	+	+	+	+	+	+	+	+	+	+	+	+	+	+
	—Every 12 Months, or			•		•		•		•		•		•		•		•		•		•
	Oil Filter Change* —Every 3 Months, or		+	+	+	+	+	+	+	+	+	+	+	+	+	+	+	+	+	+	+	+
	—Every 12 Months, or			•				•				•				•				•		
2	Chassis Lubrication—Every 12 Months, or		+	+ •	+	+ •	+	+ •	+	+ •	+	+ •	+	+ •	+	+ •	+	+ •	+	+ •	+	+ •
3	Clutch Fork Ball Stud Lubrication											+ •										+ •
4	Engine Idle Speed Adjustment*-At First 6 Months or,					+				+ •				+				+ •				+
5	Cooling System Service*—Every 24 Months or									+ •								+ •				
6	Air Cleaner and PCV Filter Replacement▲*									+ •								+ •				
7	Front Wheel Bearing Repack					+				+ •				+				+ •				
8	Transmission Service—See page 15																					
9	PCV System Inspection*																					+ •
11	Fuel Filter Replacement*					+				+ •				+				+ •				+
12	Spark Plugs Replacement*										+ •									+ •		
13	Spark Plug Wire Inspection*																					+ •
14	EGR System Inspection*																					+ •
16	Engine Timing Check▲*									+ •								+ •				

FOOTNOTES:
*An Emission Control Service
▲Also a Noise Emission Control Service
†To determine the emissions classification of your engine refer to page 4.

M0005

(Continued on next page)

THE SERVICES SHOWN ON THIS CHART UP TO 60,000 MILES (100 000 km) ARE TO BE DONE AFTER 60,000 MILES AT THE SAME INTERVALS.

M0006

SECTION A—SCHEDULED MAINTENANCE SERVICES FOR GASOLINE ENGINES WITH HEAVY EMISSIONS† (Cont'd)

Item No.	Service	Miles (000) / Kilometers (000)	3 / 5	6 / 10	9 / 15	12 / 20	15 / 25	18 / 30	21 / 35	24 / 40	27 / 45	30 / 50	33 / 55	36 / 60	39 / 65	42 / 70	45 / 75	48 / 80	51 / 85	54 / 90	57 / 95	60 / 100
			If your driving conditions meet those specified on page 5, use Maintenance Schedule I (+).				If your driving conditions do NOT meet those specified on page 5, use Maintenance Schedule II (•).															
17	Fuel Tank, Cap and Lines Inspection*									+								+				+ •
18	Thermostatically Controlled Air Cleaner Inspection▲*									+ •								+ •				
19	Engine Accessory Drive Belt(s) Inspection*					+ •				+ •				+ •				+ •				+ •
20	Evaporative Control System Inspection*									+								+				+ •
21	Shields and Underhood Insulation Inspection▲■					+ •				+ •				+ •				+ •				+ •
22	Air Intake System Inspection▲■									+ •								+ •				
23	Thermostatically Controlled Engine Cooling Fan Check ▲■— Every 12 Months or					+ •				+ •				+ •				+ •				+ •
24	Idle Speed Control Device Check*—Every 12 Months or					+				+ •				+				+ •				+
26	Tire and Wheel Rotation—See page 16																					
27	Drive Axle Service		+	+ •	+	+ •	+	+ •	+	+ •	+	+ •	+	+ •	+	+ •	+	+ •	+	+ •	+	+ •
28	Brake Systems Inspection—See page 17																					

FOOTNOTES:
* An Emission Control Service
▲ Also a Noise Emission Control Service
■ Applicable only to vehicles sold in the United States
† To determine the emissions classification of your entine refer to page 4.

M0007

THE SERVICES SHOWN ON THIS CHART UP TO 60,000 MILES (100 000 km) ARE TO BE DONE AFTER 60,000 MILES AT THE SAME INTERVALS.

M0008

SECTION A—SCHEDULED MAINTENANCE SERVICES FOR 6.2 L DIESEL ENGINES†

Item No.	Service	Miles (000) / Kilometers (000)	2.5 / 4	5 / 8	7.5 / 12	10 / 16	12.5 / 20	15 / 24	17.5 / 28	20 / 32	22.5 / 36	25 / 40	27.5 / 44	30 / 48	32.5 / 52	35 / 56	37.5 / 60	40 / 64	42.5 / 68	45 / 72	47.5 / 76	50 / 80	52.5 / 84	55 / 88	57.5 / 92	60 / 96
	If your driving conditions meed those specified on page 5, use Maintenance Schedule I (+).								If your driving conditions do NOT meet those specified on page 5, use Maintenance Schedule II (•).																	
1	Engine Oil Change*—Every 3 Months, or		+	+	+	+	+	+	+	+	+	+	+	+	+	+	+	+	+	+	+	+	+	+	+	+
	—Every 12 Months, or			•		•		•		•		•		•		•		•		•		•		•		•
	Oil Filter Change*—Every 3 Months, or		+	+	+	+	+	+	+	+	+	+	+	+	+	+	+	+	+	+	+	+	+	+	+	+
	—Every 12 Months, or			•		•		•		•		•		•		•		•		•		•		•		•
2	Chassis Lubrication—Every 12 Months, or		+	+•	+	+•	+	+•	+	+•	+	+•	+	+•	+	+•	+	+•	+	+•	+	+•	+	+•	+	+•
3	Clutch Fork Ball Stud Lubrication													+•												+•
4	Engine Idle Speed Adjustment*			+•										+•												+•
5	Cooling System Service*—Every 24 Months or													+•												+•
6	Air Cleaner Element Replacement*[1]													+•												+•
7	Front Wheel Bearing Repack							+						+•						+						+•
8	Transmission Service—See page 15																									
10	CDRV System Inspection*																									+•
11	Fuel Filter Replacement*													+•												+•
14	EGR System Inspection*[2]											+•								+•						+•
19	Drive Belt(s) Inspection																									+•
21	Shields and Underhood Insulation Inspection■▲					+•				+•				+•				+•				+•				+•
22	Air Intake System Inspection■▲					+•				+•				+•				+•				+•				+•
23	Thermostatically Controlled Engine Cooling Fan Check■▲—Every 12 Months or					+•				+•				+•				+•				+•				+•
25	Exhaust Pressure Regulator Valve Inspection*																									+•
26	Tire and Wheel Rotation—See page 16																									
27	Drive Axle Service		+	+•	+	+•	+	+•	+	+•	+	+•	+	+•	+	+•	+	+•	+	+•	+	+•	+	+•	+	+•
28	Brake Systems Inspection—See page 17																									

FOOTNOTES:

1 For vehicles with engine VIN Code J (RPO LL4), replace element every 15,000 miles (24 000 km).

2 The U.S. Environmental Protection Agency has determined that the failure to perform this maintenance item will not nullify the emission warranty or limit recall liability prior to the completion of vehicle useful life. General Motors, however urges that all recommended maintenance services be performed at the indicated intervals and the maintenance be recorded in Section D.

* An Emission Control Service

■ Applicable only to trucks sold in the United States.

▲ Also, a Noise Control Service (applicable to vehicles with engine VIN Code J).

† This maintenance schedule applies to all diesel engines available.

M0009

THE SERVICES SHOWN ON THIS CHART UP TO 60,000 MILES (100 000 km) ARE TO BE DONE AFTER 60,000 MILES AT THE SAME INTERVALS.

M0010

EXPLANATION OF SCHEDULED MAINTENANCE SERVICES

Below are explanations of the services listed in the maintenance charts.

The proper fluids and lubricants to use are listed in Section C. Make sure whoever services your vehicle uses these. All parts should be replaced and all necessary repairs done before you or anyone else drives the vehicle.

Item No.

1. **ENGINE OIL AND OIL FILTER CHANGE*** -ALWAYS USE SG OR SG/CE QUALITY, ENERGY CONSERVING II OILS OF THE PROPER VISCOSITY. To determine the preferred viscosity oil for your vehicle's engine (e.g. SAE 5W-30 or 10W-30). See Section 6 of your Owner's Manual.
2. **CHASSIS LUBRICATION**-Lubricate the front suspension, king pin bushings, steering linkage, transmission, clutch, and transfer case shift linkage, parking brake cable guides, propshaft splines, universal joints, brake pedal springs, and clutch pedal springs at the intervals specified in Section A or at every engine oil change, whichever comes first. On vehicles without hydraulic clutches lubricate clutch cross shaft every 30,000 miles (50 000 km).
   Ball joints and king pin bushings should not be lubricated unless their temperature is 10°F (-12°C), or higher. When the weather is cold, let them warm up before lubricating them or they could be damaged.
   Also, be sure to check all the vehicle fluid levels at this time.
3. **CLUTCH FORK BALL STUD LUBRICATION**-Lubricate the clutch fork ball stud through the fitting on the clutch housing. Lubricant must be added "sparingly" to the fitting, as only .0066 lb. (.003 kg) is required to lubricate the ball stud surface. Do not add lubricant more often than the intervals in the Maintenance Charts. **Too much lubricant will damage the clutch assembly.**
4. **ENGINE IDLE SPEED ADJUSTMENT (ENGINES NOT EQUIPPED WITH AN IDLE SPEED CONTROL OR IDLE AIR CONTROL SYSTEM)***-Adjust to the specifications shown on the underhood label. You must use calibrated test equipment. Check that idle stop solenoid or dashpot work properly (if so equipped).
5. **COOLING SYSTEM SERVICE***-Drain, flush and refill system with new coolant. See Section 6 of your Owner's Manual for the proper coolant and mixture to use in your vehicle.
   Also inspect the hoses and replace them if they are cracked, swollen, or deteriorated. Tighten all hose clamps. Clean the outside of the radiator and air conditioning condenser. Wash the radiator neck. To ensure proper operation, pressure test the radiator and cap.
6. **AIR CLEANER AND PCV FILTER REPLACEMENT (IF EQUIPPED)***-Replace at specified intervals. Replace more often under dusty conditions. Ask your dealer for the proper replacement intervals for your driving conditions.
7. **FRONT WHEEL BEARING REPACK-(2WHEEL DRIVE ONLY)**-Clean and repack the front wheel bearings at each brake relining, or at the specified interval, whichever comes first.

---

* An Emission Control Service

8. **TRANSMISSION SERVICE**
   Automatic Transmission-Change the transmission fluid and filter every 15,000 miles (25 000 km) for vehicles under 8,600 GVWR or every 12,000 miles (20 000 km) for vehicles over 8,600 GVWR if the vehicle is mainly driven under one or more of these conditions:
   - In heavy city traffic.
   - Where the outside temperature regularly reaches 90°F (32°C) or higher.
   - In hilly or mountainous terrain.
   - Frequent trailer pulling.
   - Uses such as taxi, police, delivery or other commercial service.

   If the vehicle is not used mainly under any of these conditions, change the fluid and filter every 30,000 miles (50 000 km) for vehicles under 8600 GVWR or every 24,000 miles (40 000 km) for vehicles over 8600 GVWR. Refer to Section 6 of your Owner's Manual for further details.
   Manual Transmission-Transmission fluid does not require periodic changing.
9. **PCV SYSTEM INSPECTION***-Check that PCV (Positive Crankcase Ventilation) system works properly. Replace the valve and any worn, plugged or collapsed hoses as necessary.
10. **CDRV SYSTEM INSPECTION***-Check the Crankcase Depression Regulator Valve System for any worn, plugged or collapsed hoses. Have the system checked as described in the Service Manual.
11. **FUEL FILTER REPLACEMENT***-Replace the fuel filter at the specified interval or sooner if clogged.
12. **SPARK PLUGS REPLACEMENT***-Replace spark plugs with the type listed in Section 6 of your Owner's Manual.
13. **SPARK PLUG WIRE INSPECTION***-Clean wires and inspect for burns, cracks or other damage. Check the wire boot fit at the distributor and at the spark plugs. Replace wires as needed.
14. **EGR SYSTEM INSPECTION***-Conduct EGR SYSTEM CHECK as described in the Service Manual.
15. **ELECTRONIC VACUUM REGULATOR VALVE (EVRV) INSPECTION***-Inspect filter for excessive contamination or plugging. If required, clean element with a solution of biodegradable soap and water, let dry and reinstall element.
16. **ENGINE TIMING CHECK AND DISTRIBUTOR CHECK (SOME MODELS)***-Adjust timing to underhood label specifications. Inspect the inside and outside of the distributor cap and rotor for cracks, carbon tracking and corrosion. Clean or replace as needed.
17. **FUEL TANK, CAP AND LINES INSPECTION***-Inspect the fuel tank, cap and lines for damage or leaks. Remove fuel cap, inspect gasket for an even filler neck imprint, and any damage. Replace parts as needed.
18. **THERMOSTATICALLY CONTROLLED AIR CLEANER INSPECTION*▲** -(If so equipped.) Inspect all hoses and ducts for proper hookup. Make sure valve works properly.
19. **ENGINE ACCESSORY DRIVE BELT(S) INSPECTION***-Inspect belts. Look for cracks, fraying, wear, and proper tension. Adjust or replace as needed.
20. **EVAPORATIVE CONTROL SYSTEM (ECS) INSPECTION***-Check all fuel and vapor lines and hoses for proper hookup, routing, and condition. Check that bowl vent and purge valves work properly, if equipped. Replace as needed.
21. **SHIELDS AND UNDERHOOD INSULATION INSPECTION▲■** -Inspect shields and underhood insulation for damage or looseness. Adjust or replace as required.

---

*An Emission Control Service
▲Also a Noise Emission Control Service
■Applicable only to vehicles sold in the United States

22. **AIR INTAKE SYSTEM INSPECTION▲■**-Check the air intake system installation to see that gaskets are seated properly and all hose connections, fasteners, and other components are tight. Also check to be sure that the air cleaner housing is properly seated, that the cover fits tightly, and the wingnut(s) is tight. Tighten connections and fasteners or replace damaged parts as required.
23. **THERMOSTATICALLY CONTROLLED ENGINE COOLING FAN INSPECTION▲■**-(If so equipped.) With the engine off and below normal operating temperature, check to see that the fan can be rotated by hand on fluid coupling or viscous drives. Replace as necessary.
24. **IDLE SPEED CONTROL DEVICE CHECK*** -Check that parts work properly. Replace them as needed.
25. **EXHAUST PRESSURE REGULATOR VALVE INSPECTION***-Check that the valve works properly. Correct any binding. Inspect hoses for cracks, chafing or decay. Replace parts as needed.
26. **TIRE AND WHEEL ROTATION AND INSPECTION**-For proper wear and maximum tire life, rotate tires at the first 6,000 miles (10 000 kilometers) for schedule I (+) or 7,500 miles (12 500 kilometers) for schedule II (•) and then every 15,000 miles (25 000 kilometers) thereafter. Follow the instructions and patterns shown in Section 6 of your Owner's Manual. Check tires for uneven wear or damage. If irregular or premature wear is apparent, check wheel alignment. Also, check for damaged wheels. For dual wheels, whenever the vehicle, wheels, or fasteners are new, have the wheel fastener torque set at the first 100, 1,000 and 6,000 miles (160, 1 600 and 10 000 km). For Forward Control and Motor Home models, nut tightness should be set with a torque wrench every 6,000 miles (9 600 kilometers).

    For C3500 H.D. Models, chock the tires opposite those being removed to keep the vehicle from rolling.
27. **DRIVE AXLE SERVICE**-Check rear/front axle fluid level and add as needed. Check constant velocity joints and axle seals for leaking.
    - **Locking differential**-Drain fluid at first oil change and refill. Check fluid level and add as needed at subsequent oil changes. In dusty areas, or trailer towing applications drain fluid at every 15,000 miles and refill.†
    - **Standard differential**-Check fluid level and add as needed at every oil change. In dusty areas, or trailer towing applications, drain fluid every 15,000 miles and refill.†
    - More frequent lubrication may be required on heavy-duty or off-road use.
28. **Brake system inspection**-When the engine oil is changed, inspect the lines and hoses for proper hookup, biding, leaks, craks, chafing, etc. Check the parking brake adjustment, and the fluid level in the master cylinder. A low fluid level can indicate worn disc brake pads which may need to be serviced.†

    When the wheels are removed for rotation, inspect disc brake pads for wear and rotors for surface condition. Also inspect drum brake linings for wear and cracks. Inspect other brake parts, including drums, wheel cylinders, parking brake, etc., at the same time.

    Inspect brakes more often if driving habits or conditions result in frequent braking.

---

*An Emission Control Service

▲Also a Noise Emission Control Service

■Applicable only to vehicles sold in the United States

† A fluid loss in these systems may indicate a problem. Have them inspected and repaired at once.

SECTION B—
OWNER INSPECTIONS AND SERVICES

Listed below are inspections and services which would be made at the time period specified to help ensure proper safety, emission performance, and dependability of your vehicle.

Be sure any necessary repairs are completed at once. Whenever any fluids or lubricants are added to your vehicle, make sure they are the proper ones, as shown in Section C.

AT LEAST TWICE A YEAR
(FOR EXAMPLE, EVERY SPRING AND FALL)

Steering and suspension inspection†-Inspect front and rear suspension and steering system for damaged, loose or missing parts, signs of wear or lack of lubrication. Inspect power steering lines and hoses for proper hook-up, binding, leaks, cracks, chafing, etc. (On vehicles equipped with manual steering gear, check for seal leakage.) Lubricate the steering linkage.

Accelerator Control System-Lubricate all pivot points with engine oil, except the TBI throttle shaft. Do not lubricate the cam pulley on G, M and S/T Models. Remove all external deposits from the injector pump face cam on 6.2L engines. Do this when the engine is cold and not running. Do not oil any accelerator or cruise control cables. Replace any cables that have high effort or excessive wear.

Exhaust system inspection* -Inspect complete system including catalytic converter. Inspect the body near the exhaust system. Look for broken, damaged, missing or out-of-position parts, as well as, open seams, holes, loose connections or other conditions which could cause a heat buildup in the floor pan or could let exhaust fumes seep into the passenger compartments.

Engine drive belts inspection-Inspect all belts for cracks, fraying and wear. Adjust or replace as needed.

Drive axle service-Check rear/front axle fluid level and add as needed. Check constant velocity joints and axle seals for leaking.

Transfer case (four-wheel/all wheel drive) inspection†-Every 12 months or at oil change intervals, check front axle and transfer case and add lubricant when necessary. Oil the control lever pivot point (except L Van) and all exposed control linkage. Check vent hose at transfer case for kinks and proper installation. More frequent lubrication may be required on heavy-duty off-road use.

Key lock cylinder lubrication-Lubricate key lock cylinders with one of the lubricants recommended in Section C of this booklet.

---

*An Emission Control Service
†A fluid loss in these systems may indicate a problem. Have them in spected and repaired at once.

AT LEAST ONCE A YEAR

Transmission neutral or clutch start switch operation

CAUTION: When you are doing this check, the vehicle could move suddenly. If it does, you or others could be injured. Follow the steps below.

1. Before you start, be sure you have enough room around the vehicle.
2. Firmly apply both the manual parking brake (see Owner's Manual if necessary) and the regular brake. Do not use the accelerator pedal.
3. Be ready to turn off the engine immediately if it starts.
4. On automatic transmission vehicles, try to start the engine in each gear. The starter should work only in "Park" or "Neutral."
   On manual transmission vehicles, put the shift lever in "Neutral," push the clutch down halfway, and try to start the engine. The starter should work only when the clutch is pushed down all the way to the floor.

Steering column lock operation-While parked, try to turn the key to "Lock" in each gear shift position.

- With an automatic transmission, the key should turn to "Lock" only when the gear shift is in "Park."
- With manual shift, the key should turn to "Lock" only when you're in "Reverse."

On vehicles with a key release lever, try to turn the key to "Lock" without pressing the lever. The key should turn to "Lock" only with the key lever depressed.

On all vehicles, the key should come out only in "Lock."

Parking brake and transmission "P" (PARK) mechanism operation-

CAUTION: When you are doing this check, your vehicle could begin to move. You or others could be injured and property could be damaged. Make sure there is room in front of your vehicle in case you begin to roll. Be ready to apply the regular brake at once should the vehicle begin to move.

Park on a fairly steep hill, with the vehicle facing downhill. Keeping your foot on the regular brake, set the manual parking brake.

- To check the parking brake: With the engine running and the transmission in Neutral, slowly remove foot pressure from the regular brake pedal. Do this until the vehicle is held by the parking brake only.
- To check the "Park" mechanism's holding ability: Apply the regular brake and shift to "Park." Release the manual parking brake, then slowly release the regular brake.

Lap and shoulder belts condition and operation-Inspect belt system, including: webbing, buckles, latch plates, retractors, guide loops and anchors. Have a belt assembly replaced if the webbing has been cut or otherwise damaged.

Body Lubrication Service-Lubricate all body door hinges including the tailgate, tailgate handle pivot points, and tailgate mounted spare tire carrier (if equipped), lubricate the body hood, fuel door and rear compartment hinges, latches and locks including interior glove box and console doors, and any folding seat hardware. Lubricate the hood safety lever pivot and prop rod pivot. More frequent lubrication may be required when exposed to a corrosive environment.

SECTION C— RECOMMENDED FLUIDS & LUBRICANTS

NOTE: Fluids and lubricants identified below by name, part number or specification may be obtained from your GM Dealer.

USAGE	FLUID/LUBRICANT
Engine Oil	GM Goodwrench Motor Oil or equivalent for API Service SG or SG/CE of the recommended viscosity.
Engine Coolant	Mixture of water and a good quality ethylene glycol base antifreeze conforming to GM-6038-M (GM Part No. 1052103).
Hydraulic Clutch System	Hydraulic Clutch Fluid (GM Part No. 12345347) or DOT-3 brake fluid.
Hydraulic Brake Systems	Delco Supreme 11 brake fluid (GM Part No. 1052535 or DOT-3).
Parking Brake Cables	Chassis grease meeting requirements of GM-6031-M (GM Part No. 1052497).
Power Steering System	GM Power Steering Fluid (GM Part No. 1050017) or equivalent conforming to GM spec 9985010.
Manual Steering Gear	GM Lubricant (GM Part No. 1052182) or equivalent.
Automatic Transmission	DEXRON® II Automatic Transmission Fluid (GM Part No. 1051855).
Manual Transmission:	
a. 4-Speed (RPO M20)	a. SAE 80 Synchromesh Transmission Fluid (GM Part No. 12345577).
b. 5-Speed (RPO ML2 and ML3)	b. DEXRON® II Automatic Transmission Fluid (GM Part No. 1051855).
c. 5-Speed (RPO MG5 and MY2)	c. Standard Transmission Fluid (GM Part No. 12345349).
d. 5-Speed (RPO MT8)	d. SAE 80 Synchromesh Transmission Fluid (GM Part No. 12345577).
Differential:	
a. Standard — Front and Rear Axle	a. SAE-80W-90 GL-5 gear lubricant (GM Part No. 1052271).
b. Locking	b. SAE-80W-90 gear lubricant (GM Part No. 1052271).
Transfer Case	Dexron® II Automatic Transmission Fluid (GM Part No. 1051855).

(Continued next page)
M0011

RECOMMENDED FLUIDS & LUBRICANTS (Cont'd.)

Manual Transmission Shift Linkage, Transfer Case Shift Lever, Propeller Shaft Slip Splines and Universal Joints.	Chassis grease meeting requirements of GM-6031-M (GM Part No. 1052497).
Clutch Linkage (Manual Transmission without hydraulic clutches only) a. Pivot Points b. Pushrod to clutch fork joint, and shaft pressure fitting	a. Engine oil b. Chassis grease meeting requirements of GM-6031-M (GM Part No. 1051344).
Clutch Fork Ball Stud	Chassis grease meeting requirements of GM-6031-M (GM Part No. 1051344
Hood Latch Assembly a. Pivots and spring anchor b. Release Pawl	a. Engine oil (GM Part No. 1050109). b. Chassis grease meeting requirements of GM-6031-M (GM Part No. 1052497).
Front Wheel Bearings	Chassis grease meeting requirements of GM-6031-M (GM Part No. 1051344)
Constant Velocity Universal Joint	Chassis grease meeting requirements of GM-6031-M (GM Part No. 1052497)
Automatic Transmission Shift Linkage, Floor Shift Linkage, Hood and Door Hinges, Body Door Hinge Pins, Tailgate Hinge and Linkage, Folding Seat, Fuel Door Hinge	Engine oil
Key Lock Cylinders	GM Multi-Purpose lubricant (GM Part No. 12345120) or a synthetic light weight engine oil (SAE 5W-30).
Chassis Lubrication	Chassis grease meeting requirements of GM-6031, (GM Part No. 1052497).
Windshield Washer Solvent	GM Optikleen washer solvent (GM Part No. 1051515) or equivalent.
Weatherstrip	Silicone grease (GM Part No. 1052863) or equivalent.
Tailgate Mounted Spare Tire Carrier (If Equipped) Outer Tailgate Handle Pivot Points	Multi-purpose lubricant meeting requirements of GM Part No. 12345120.
	M0012

NOTE: Silicone lubricants should not be used on lock cylinders with plastic caps.

SECTION E—
SERVICE STATION CHECKS

It is important for you or a service station attendant to perform these under-hood checks at each fuel fill.

- Check the engine oil level and add if necessary.
- Check the engine coolant level and add if necessary.
- Check the windshield washer fluid level and add if necessary.
- Check the tires for proper inflation. If they are low, inflate them to the level specified on the Certification Label or Section 6 of your Owner's Manual.

See Section 6 of your Owner's Manual for information on how to check these items.

ENGINE IDENTIFICATION

You can identify your 1991 GM engine from the Vehicle Identification Number. The eighth character of the VIN is the Engine Code. Refer to the following Engine Code Identification chart. Some information in this manual may refer to the Engine Code. For example, a 5.7 Liter V-8 engine may be refered to as a 5.7 Liter (Engine Code K) V-8 Engine.

ENGINE DESCRIPTION					
Liter Displacement	Type	VIN Engine Code	Fuel System	Produced In	Emissions
5.7	V8	K	TBI	U.S., Can.	**
6.2	V8	C	F.I.*	U.S.	L.D.
6.2	V8	J	F.I.*	U.S.	H.D.
7.4	V8	N	TBI	U.S.	H.D.

*Diesel Engine
**Light Duty Emissions with 8500 GVWR and below or:
Heavy Duty Emissions with 8501 GVWR and above.

T0020

CAPACITIES

Cooling System (R/V Models)

ENGINE	VIN CODE	QUANTITY*	
		Without A/C	With A/C
5.7L	K	17.5 Quarts (16.5 Liters)	18.5 Quarts (17.5 Liters)
6.2L	C	24 Quarts (23.5 Liters)	25 Quarts (23.5 Liters)
6.2L	J	24 Quarts (23.5 Liters	25 Quarts (23.5 Liters)
7.4L	N	23 Quarts (22 Liters)	24 Quarts (23 Liters)

*Equipped with Auxiliary Heater add 2.84 Qts./2.68L.
*All quantities are approximate.
*After refill, the level MUST be checked as outlined under "Engine Cooling System" in Section 5.

T0023

Crankcase (R/V Models)

ENGINE	VIN CODE	QUANTITY*	
		Without Filter	With Filter
5.7L	K	4 Quarts (3.8 Liters)	5 Quarts (4.8 Liters)
6.2L	C†	—	7 Quarts (6.5 Liters)
6.2L	J†	—	7 Quarts (6.5 Liters)
7.4L	N	6 Quarts (5.8 Liters)	7 Quarts (6.6 Liters)

†Oil filter should be changed at EVERY oil change.
*All quantities are approximate.
*After refill, the level MUST be checked as outlined under "Engine Oil And Filter Recommendations" in Section 5.

T0181

CAPACITIES (Continued)

Cooling System (P Models)

ENGINE	VIN CODE	QUANTITY
4.3L	Z	13.8 Quarts (13.1 Liters)
5.7L	K	15.5 Quarts (14.6 Liters)
6.2L	J	
P30032		24.7 Quarts (23.4 Liters)
P30042		25 Quarts (23.5 Liters)
7.4L	N	22.5 Quarts (21.2 Liters)

*All quantities are approximate.
*After refill, the level MUST be checked as outlined under "Engine Cooling System" In Section 5.

T0068

Crankcase (P Models)

ENGINE	VIN CODE	QUANTITY	
		Without Filter	With Filter
4.3L	Z	5 Quarts (4.8 Liters)	6 Quarts (5.7 Liters)
5.7L	K	4 Quarts (3.8 Liters)	5 Quarts (4.8 Liters)
6.2L	J†	—	7 Quarts (6.5 Liters)
7.4L	N	6 Quarts (5.7 Liters)	7 Quarts (6.5 Liters)

*All quantities are approximate.
*After refill, the level MUST be checked as outlined under "Engine Oil And Filter Recommendations" in Section 5.
†Oil filter should be changed at EVERY oil change.

T0190

Fuel Tank (P Models)

MODELS	QUANTITY
Standard**	40 Gallons (151 Liters)
School Bus (B3D)	30 Gallons (113 Liters)
Motor Home***	40 Gallons (151 Liters)

*All quantities are approximate.
**Optional 80 gallon fuel tank available with 178 or 208 inch w.b.
***Optional 60 gallon fuel tank available.

T0191

CAPACITIES (CONTINUED)

Items	Metric Measure	U.S. Measure
Rear Axle		
8 1/2″ Ring Gear	2.0L	4.2 pts.
9 1/2″ Ring Gear	3.1L	6.5 pts.
10 1/2″ Ring Gear (Chev.)	3.1L	6.5 pts.
9 3/4″ Ring Gear (Dana)	2.8L	6.0 pts.
Front Axle		
V1/2	1.66L	1.75 qts.
V3	2.1L	2.2 qts.
Automatic Transmission		
4L60 - Pan Removal	4.0L	4.2 qts.
- Overhaul	10.0L	10.6 qts.
4L80E - Pan Removal	4.7L	5.0 qts.
- Overhaul	10.9L	11.5 qts.
Manual Transmission		
4 Speed 117mm	4.0L	4.2 qts.
5 Speed 85mm	1.75L	1.8 qts.
Transfer Case		
V1/2	1.3L	1.4 qts.
V3	2.6L	2.75 qts.

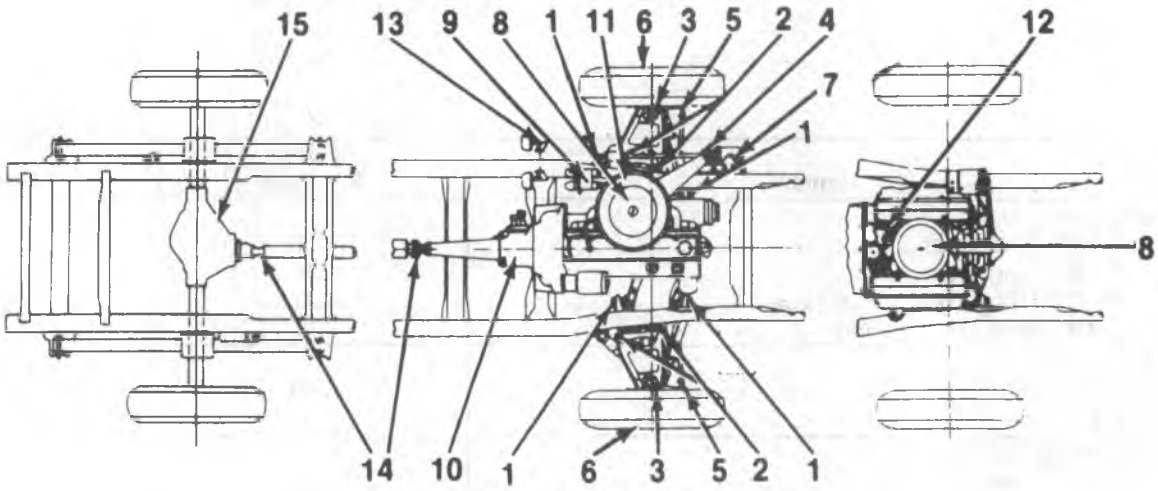

1. Lower Control Arms
2. Upper Control Arms
3. Upper and Lower Control Arm Ball Joints
4. Intermediate Steering Shaft (PA10)
5. Tie Rod Ends
6. Wheel Bearings
7. Steering Gear
8. Air Cleaner - Element
9. Master Cylinder
10. Transmission - Manual
    - Automatic
11. Throttle Bell Crank - L6
12. Carburetor Linkage - V8
13. Brake and Clutch Pedal Springs
14. Universal Joints
15. Rear Axle

F0433

Figure 1—Lubrication Points for the Conventional and Forward Control Models

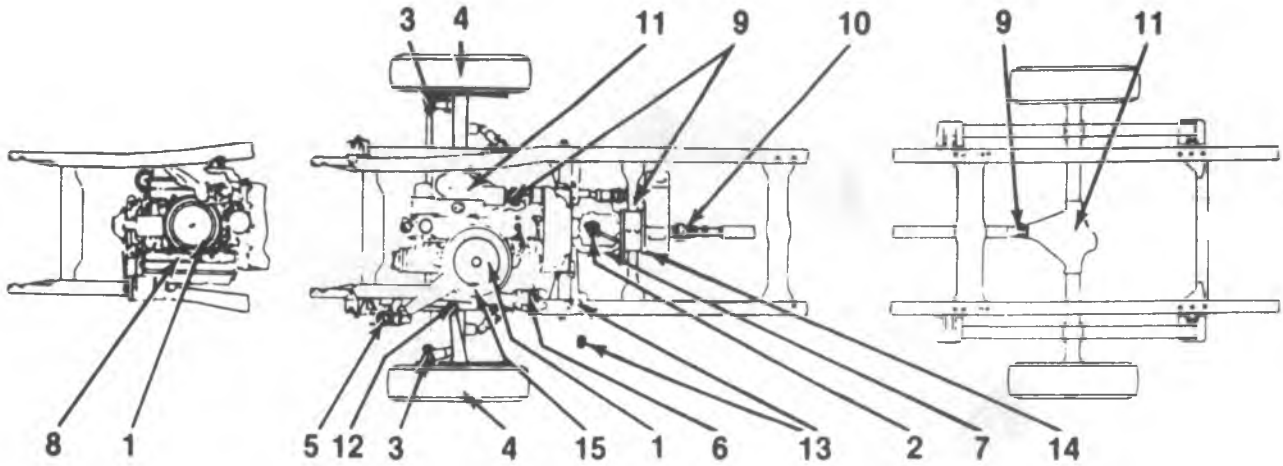

1. Air Cleaner
2. Control Linkage Points
3. Tie Rod Ends
4. Wheel Bearings
5. Steering Gear
6. Master Cylinder
7. Transmission - Manual
   - Automatic
8. Carburetor Linkage - V8
9. Universal Joints
10. Propeller Shaft Slip Joints
11. Front and Rear Axle
12. Drag Link
13. Brake and Clutch Pedal Springs
14. Transfer Case
15. Throttle Bell Crank - L6

F0434

Figure 2—Lubrication Points for the Four Wheel Drive Models

TIRE PRESSURE CHARTS

Refer to WHEELS AND TIRES (SEC. 3E) and Cetification Label.

TIRE LOAD LIMIT CHARTS — R/V

(Tire & wheel load limits are shown below. Vehicle loading must be limited such that neither the wheel or tire inflation pressure or load limits are exceeded).

RADIAL TIRE SIZE AND LOAD LIMITS — kg (LBS.)

Metric Radial Tires Used As Singles

Tire Size	Load Range	Inflation Pressure — kPa (PSI)						
		250 (36)	300 (44)	350 (51)	400 (58)	450 (65)	500 (73)	550 (80)
LT215/85R16	C	695 (1532)	790 (1742)	880 1940)				
LT215/85R16	D	695 (1532)	900 (1984)	880 (1940)	965 (2127)	1050 (2315)		
LT235/85R16	D	790 (1742)	900 (1984)	1000 (2205)	1100 (2425)	1190 (2623)		
LT235/85R16	E	790 (1742)	900 (1984)	1000 (2205)	1100 (2425)	1190 (2623)	1290 (2844)	1380 (3042)

Metric Radial Tires Used As Duals

Tire Size	Load Range	Inflation Pressure — kPa (PSI)						
		250 (36)	300 (44)	350 (51)	400 (58)	450 (65)	500 (73)	550 (80)
LT215/85R16	C	630 (1389)	720 (1587)	800 (1764)				
LT215/85R16	D	630 (1389)	720 (1587)	800 (1764)	870 (1918)	955 (2105)		

BIAS TIRE SIZE AND LOAD LIMITS — kg (LBS.)

Bias Tires Used As Singles

Tire Size	Load Range	Inflation Pressure — kPa (PSI)									
		207 (30)	241 (35)	276 (40)	310 (45)	345 (50)	379 (55)	414 (60)	448 (65)	483 (70)	517 (75)
7.50-16	C	735 (1620)	803 (1770)	875 (1930)	934 (2060)						
7.50-16	D	735 (1620)	803 (1770)	875 (1930)	934 (2060)	993 (2190)	1048 (2310)	1107 (2440)			
7.60-16	E	735 (1620)	803 (1770)	875 (1930)	934 (2060)	993 (2190)	1048 (2310)	1107 (2440)	1161 (2560)	1211 (2670)	1261 (2780)

Bias Tires Used As Singles

Tire Size	Load Range	Inflation Pressure — kPa (PSI)									
		207 (30)	241 (35)	276 (40)	310 (45)	345 (50)	379 (55)	414 (60)	448 (65)	483 (70)	517 (75)
7.50-16	C	649 (1430)	710 (1565)	767 (1690)	823 (1815)						
7.50-16	D	649 (1430)	710 (1565)	767 (1690)	823 (1815)	875 (1930)	925 (2040)	971 (2140)			

T2158

TIRE LOAD LIMIT CHARTS — P MODELS

(Tire load limits at different inflation pressures are shown below. Vehicle loading must be limited such that neither the tire inflation pressures or load limits are exceeded).

METRIC RADIAL TIRES (ALL) — LBS. (kg)

Tire Size	Load Range	Single Dual	Inflation Pressure — kPa (PSI)							
			45 (310)	50 (345)	55 (379)	60 (414)	65 (448)	70 (483)	75 (517)	80 (552)
LT215/85R16	C	S	1785 (810)	1940 (880)						
		D	1625 (737)	1765 (800)						
LT215/85R16	D	S	1785 (810)	1940 (880)	2050 (930)	2180 (988)	2335 (1060)			
		D	1625 (737)	1765 (800)	1865 (845)	1985 (900)	2150 (975)			
LT235/85R16	D	S	2030 (920)	2205 (1000)	2335 (1060)	2485 (1127)	2623 (1190)			
		—								
LT235/85R16	E	S	2030 (920)	2205 (1000)	2335 (1060)	2485 (1127)	2623 (1190)	2765 (1255)	2905 (1318)	3042 (1380)
		—								
7.5OR16*		S	1930 (875)	2060 (934)	2190 (993)	2310 (1048)	2440 (1107)			
		D	1690 (767)	1815 (823)	1930 (875)	2040 (925)	2140 (971)			

* Michelin non-metric

STANDARD RADIAL TIRES (EXCEPT MICHELIN) — LBS. (kg)

Tire Size	Load Range	Single Dual	Inflation Pressure - PSI (kPa)							
			60 (414)	65 (448)	70 (483)	75 (517)	80 (552)	85 (586)	90 (621)	95 (655)*
8R19-5	D	S	2270 (1030)	2410 (1093)	2540 (1152)	2680 (1216)	2800 (1270)			
		D	2230 (1012)	2350 (1066)	2460 (1116)					
8R19-5	E	S	2270 (1030)	2410 (1093)	2540 (1152)	2680 (1216)	2800 (1270)	2930 (1329)	3060 (1388)	3170 (1438)
		D	2230 (1012)	2350 (1066)	2460 (1116)	2570 (1166)	2680 (1216)	2780 (1261)		
8R19-5	F	S	2270 (1030)	2410 (1093)	2540 (1152)	2680 (1216)	2800 (1270)	2930 (1329)	3060 (1388)	3170 (1438)
		D	2230 (1012)	2350 (1066)	2460 (1116)	2570 (1166)	2680 (1216)	2780 (1261)	2880 (1306)	2980 (1352)

*Maximum wheel pressure

T2160

DRIVE BELT TENSION SPECIFICATIONS

Engine	Tension Requirement[1,2]	Generator	Power Steering Pump	Air Conditioning Compressor	A.I.R. Pump
4.3L V6	Before Operating the Engine (New Belt)	600N (135 lb.)	650N (146 lb.)	750N (169 lb.)	650N (146 lb.)
	After Operating the Engine (Old Belt)	400N (90 lb.)	300N (67 lb.)	400N (90 lb.)	300N (67 lb.)
5.0L V8	Before Operating the Engine (New Belt)	600N (135 lb.)	650N (146 lb.)	750N (169 lb.)	650N (146 lb.)
	After Operating the Engine (Old Belt)	400N (90 lb.)	300N (67 lb.)	400N (90 lb.)	300N (67 lb.)
5.7L V8	Before Operating the Engine (New Belt)	600N (135 lb.)	650N (146 lb.)	750N (169 lb.)	650N (146 lb.)
	After Operating the Engine (Old Belt)	400N (90 lb.)	300N (67 lb.)	400N (90 lb.)	300N (67 lb.)
7.4L V8	Before Operating the Engine (New Belt)	*600N (135 lb.)	650N (146 lb.)	650N (146 lb.)	**250N (56 lb.)
	After Operating the Engine (Old Belt)	*400N (90 lb.)	400N (90 lb.)	400N (90 lb.)	**150N (34 lb.)
6.2L V8 (Diesel)	Before Operating the Engine (New Belt)	650N (146 lb.)	650N (146 lb.)	750N (169 lb.)	—
	After Operating the Engine (Old Belt)	300N (67 lb.)	300N (67 lb.)	400N (90 lb.)	—

* New Service Belt: 500 N ± 25 N/USED Service Belt: 400 N ± 25 N.
** When equipped with a right hand mounted pump and/or Federal Emissions (NA5) ONLY.
1: Used belts must be set at specification -0, +50 N.
2: Some engines use a single belt serpentine accessory drive system. This system maintains the correct tension automatically and does not require periodic adjustment.
DO NOT exceed the "New Belt" tension specification when tensioning any belt, especially a used belt.
TENSION GAUGE: V-Belts; Burroughs BT-33-96 ACBN or equivalent.
Multi-Rib; Burroughs BT-33-97M or equivalent.

T2161

WHEEL CODE AND LOAD LIMITS

R/V MODELS

Code*	Wheel Size	Max. Load lbs. (kg)	Max. Pressure PSI (kPa)
RCV	16 x 6.5	3,045 (1381)	90 (691)
RBH	15 x 7	1,984 (900)	41 (282)
RBJ	15 x 7	1,984 (900)	41 (282)
TBR	16 x 6	2,440 (1107)	80 (52)
XAJ	15 x 8	1,984 (900)	41 (282)
DAB	15 x 8	2,030 (921)	41 (282)
XAH	15 x 6	1,984 (900)	70 (483)
XX	15 x 6	2,040 (925)	70 (483)

* Wheel code is located on the wheel just to the right of the valve stem hole.

T0143

P MODELS

WHEEL CODE AND LIMITS CHART			
WHEEL CODE	WHEEL SIZE	MAX. LOAD lbs. (kg)	MAX PRESSURE psi (kPa)
AF	16X6	1,107 (2,440)	520 (75)
RAR	16x6	1,107 (2,440)	520 (75)
GBJ	16x6	1,107 (2,440)	520 (75)
GBK	16x6	1,107 (2,440)	520 (75)
GBR	16x6	1,107 (2,440)	520 (75)
GBS	16x6	1,107 (2,440)	520 (75)
GBM	16x6	1,107 (2,440)	520 (75)
GMX	16x6	1,107 (2,440)	520 (75)
BF	16x6.5	1,261 (2,780)	590 (85)
GBN	16x6.5	1,261 (2,780)	590 (85)
GBF	16x6.5	1,261 (2,780)	590 (85)
AA	16x6.5	1,381 (3,045)	620 (90)
GBL	16x6.5	1,381 (3,045)	620 (90)
GBM	16x6.5	1,381 (3,045)	620 (90)
RCV	16X6.5	1,381 (3,045)	620 (90)
*ZY	19.5x6	1,152 (2,540)	550 (80)
*GBD	19.5x6	1,152 (2,540)	550 (80)
*GBF	19.5x6	1,152 (2,540)	550 (80)
**ZT	19.5x6	1,261 (2,780)	655 (95)
**GBG	19.5x6	1,261 (2,780)	655 (95)
**GBH	19.5x6	1,261 (2,780)	655 (95)

The wheel code is located on the wheel joint to the right of the valve stem hold.

* ZY, GBD, and GBF are 8 bolt wheels.
** ZT, GBG, and GBH are 10 bolt wheels.

TIRE LOAD LIMIT CHARTS — P MODELS

(Tire load limits at different inflation pressures are shown below. Vehicle loading must be limited such that neither the tire inflation pressures or load limits are exceeded).

METRIC RADIAL TIRES (ALL) — LBS. (kg)

Tire Size	Load Range	Single Dual	Inflation Pressure — kPa (PSI)							
			45 (310)	50 (345)	55 (379)	60 (414)	65 (448)	70 (483)	75 (517)	80 (552)
LT215/85R16	C	S	1785 (810)	1940 (880)						
		D	1625 (737)	1765 (800)						
LT215/85R16	D	S	1785 (810)	1940 (880)	2050 (930)	2180 (988)	2335 (1060)			
		D	1625 (737)	1765 (800)	1865 (845)	1985 (900)	2150 (975)			
LT235/85R16	D	S	2030 (920)	2205 (1000)	2335 (1060)	2485 (1127)	2623 (1190)			
		—								
LT235/85R16	E	S	2030 (920)	2205 (1000)	2335 (1060)	2485 (1127)	2623 (1190)	2765 (1255)	2905 (1318)	3042 (1380)
		—								
7.5OR16*		S	1930 (875)	2060 (934)	2190 (993)	2310 (1048)	2440 (1107)			
		D	1690 (767)	1815 (823)	1930 (875)	2040 (925)	2140 (971)			

* Michelin non-metric

STANDARD RADIAL TIRES (EXCEPT MICHELIN) — LBS. (kg)

Tire Size	Load Range	Single Dual	Inflation Pressure - PSI (kPa)							
			60 (414)	65 (448)	70 (483)	75 (517)	80 (552)	85 (586)	90 (621)	95 (655)*
8R19-5	D	S	2270 (1030)	2410 (1093)	2540 (1152)	2680 (1216)	2800 (1270)			
		D	2230 (1012)	2350 (1066)	2460 (1116)					
8R19-5	E	S	2270 (1030)	2410 (1093)	2540 (1152)	2680 (1216)	2800 (1270)	2930 (1329)	3060 (1388)	3170 (1438)
		D	2230 (1012)	2350 (1066)	2460 (1116)	2570 (1166)	2680 (1216)	2780 (1261)		
8R19-5	F	S	2270 (1030)	2410 (1093)	2540 (1152)	2680 (1216)	2800 (1270)	2930 (1329)	3060 (1388)	3170 (1438)
		D	2230 (1012)	2350 (1066)	2460 (1116)	2570 (1166)	2680 (1216)	2780 (1261)	2880 (1306)	2980 (1352)

*Maximum wheel pressure

T2160

DRIVE BELT TENSION SPECIFICATIONS

Engine	Tension Requirement[1,2]	Generator	Power Steering Pump	Air Conditioning Compressor	A.I.R. Pump
4.3L V6	Before Operating the Engine (New Belt)	600N (135 lb.)	650N (146 lb.)	750N (169 lb.)	650N (146 lb.)
	After Operating the Engine (Old Belt)	400N (90 lb.)	300N (67 lb.)	400N (90 lb.)	300N (67 lb.)
5.0L V8	Before Operating the Engine (New Belt)	600N (135 lb.)	650N (146 lb.)	750N (169 lb.)	650N (146 lb.)
	After Operating the Engine (Old Belt)	400N (90 lb.)	300N (67 lb.)	400N (90 lb.)	300N (67 lb.)
5.7L V8	Before Operating the Engine (New Belt)	600N (135 lb.)	650N (146 lb.)	750N (169 lb.)	650N (146 lb.)
	After Operating the Engine (Old Belt)	400N (90 lb.)	300N (67 lb.)	400N (90 lb.)	300N (67 lb.)
7.4L V8	Before Operating the Engine (New Belt)	*600N (135 lb.)	650N (146 lb.)	650N (146 lb.)	**250N (56 lb.)
	After Operating the Engine (Old Belt)	*400N (90 lb.)	400N (90 lb.)	400N (90 lb.)	**150N (34 lb.)
6.2L V8 (Diesel)	Before Operating the Engine (New Belt)	650N (146 lb.)	650N (146 lb.)	750N (169 lb.)	—
	After Operating the Engine (Old Belt)	300N (67 lb.)	300N (67 lb.)	400N (90 lb.)	—

* New Service Belt: 500 N ± 25 N/USED Service Belt: 400 N ± 25 N.
** When equipped with a right hand mounted pump and/or Federal Emissions (NA5) ONLY.
1: Used belts must be set at specification -0, +50 N.
2: Some engines use a single belt serpentine accessory drive system. This system maintains the correct tension automatically and does not require periodic adjustment.
DO NOT exceed the "New Belt" tension specification when tensioning any belt, especially a used belt.
TENSION GAUGE: V-Belts; Burroughs BT-33-96 ACBN or equivalent.
Multi-Rib; Burroughs BT-33-97M or equivalent.

T2161

WHEEL CODE AND LOAD LIMITS

R/V MODELS

Code*	Wheel Size	Max. Load lbs. (kg)	Max. Pressure PSI (kPa)
RCV	16 x 6.5	3,045 (1381)	90 (691)
RBH	15 x 7	1,984 (900)	41 (282)
RBJ	15 x 7	1,984 (900)	41 (282)
TBR	16 x 6	2,440 (1107)	80 (52)
XAJ	15 x 8	1,984 (900)	41 (282)
DAB	15 x 8	2,030 (921)	41 (282)
XAH	15 x 6	1,984 (900)	70 (483)
XX	15 x 6	2,040 (925)	70 (483)

* Wheel code is located on the wheel just to the right of the valve stem hole.

T0143

P MODELS

WHEEL CODE AND LIMITS CHART			
WHEEL CODE	WHEEL SIZE	MAX. LOAD lbs. (kg)	MAX PRESSURE psi (kPa)
AF	16X6	1,107 (2,440)	520 (75)
RAR	16x6	1,107 (2,440)	520 (75)
GBJ	16x6	1,107 (2,440)	520 (75)
GBK	16x6	1,107 (2,440)	520 (75)
GBR	16x6	1,107 (2,440)	520 (75)
GBS	16x6	1,107 (2,440)	520 (75)
GBM	16x6	1,107 (2,440)	520 (75)
GMX	16x6	1,107 (2,440)	520 (75)
BF	16x6.5	1,261 (2,780)	590 (85)
GBN	16x6.5	1,261 (2,780)	590 (85)
GBF	16x6.5	1,261 (2,780)	590 (85)
AA	16x6.5	1,381 (3,045)	620 (90)
GBL	16x6.5	1,381 (3,045)	620 (90)
GBM	16x6.5	1,381 (3,045)	620 (90)
RCV	16X6.5	1,381 (3,045)	620 (90)
*ZY	19.5x6	1,152 (2,540)	550 (80)
*GBD	19.5x6	1,152 (2,540)	550 (80)
*GBF	19.5x6	1,152 (2,540)	550 (80)
**ZT	19.5x6	1,261 (2,780)	655 (95)
**GBG	19.5x6	1,261 (2,780)	655 (95)
**GBH	19.5x6	1,261 (2,780)	655 (95)

The wheel code is located on the wheel joint to the right of the valve stem hold.

* ZY, GBD, and GBF are 8 bolt wheels.
** ZT, GBG, and GBH are 10 bolt wheels.

SERVICE REPLACEMENT PART AND FILTER RECOMMENDATIONS

R/V Models

Engine (VIN)	Oil Filter	Air Cleaner	PCV Valve	Spark* Plugs	Fuel Filter	Radiator Cap
5.7 (K)	PF35	A348C	CV774C	.CR43TS	GF481	RC36
6.2 (C)	PF35	A644C	--	--	TP1006	RC32
6.2 (J)	PF35	A644C	--	--	TP1006	RC32
7.4 (N)	PF35	A753C	CV774C	.CR43TS	GF481	RC36

*Use AC copper-cored resistor type spark plugs.

T0019

Forward Control Chassis

Engine (VIN)	Oil Filter	Air Cleaner	PCV Valve	Spark* Plugs	Fuel Filter	Radiator Cap
4.8 (Z)	PF51	A178CW	CV789C	.CR43TS	GF481	RC36
5.7 (K)	PF35	A348C	CV774C	.CR43TS	GF481	RC36
7.4 (N)	PF35	A348C	CV774C	.CR43TS	GF481	RC36
6.2 (J)	PF35	A644C	N/A*	N/A*	TP1006	RC36

*Not Applicable
**Use AC copper-cored resistor type spark plugs.

T0066

SECTION 0C

VIBRATION DIAGNOSIS

CONTENTS

SUBJECT	PAGE
Description	0C- 1
Vibration	0C- 1
Diagnosis	0C- 1
Vibration Categories	0C- 1
Vibration Classes	0C- 2
Orders of Vibration	0C- 2
Road Testing	0C- 2
Reed Tachometer	0C- 4
Tire Speed Chart	0C- 6
On-Vehicle Service	0C- 6
Balancing Tire and Wheel	0C- 6
Wheel Runout	0C- 7
Match Mounting	0C- 8
Correcting Non-Uniform Tires	0C- 9
Hub and Axle Shaft Stud Runout	0C- 9
Propeller Shaft	0C-10
Propeller Shaft Runout Check	0C-10
Propeller Shaft Balance Check	0C-11
Propeller Shaft Balancing	0C-11
Propeller Shaft Phasing	0C-13
Driveline Angles	0C-13
Vibration Diagnosis Charts	0C-16

DESCRIPTION

VIBRATION

Vibration is a back and forth oscillation that can be seen, heard or felt. A vehicle imbalance or misalignment is usually the cause of a vibration.

PATH, SOURCE AND RESPONDER

In many cases the vibration that is being seen, heard or felt as the disturbance to the observer is not the source but the responder (figure 1). Many times the vibration's severity will depend on how it is transmitted through the vehicle.

DIAGNOSIS

VIBRATION CATEGORIES

There are several excitation sources and many responding systems which may cause a vibration complaint. Most vibrations are caused by wheel and tire disturbances or driveline imbalances. Each of these categories has a specific vibration associated with it. By systematically classifying the vibration into one of the following categories you can eliminate many components.

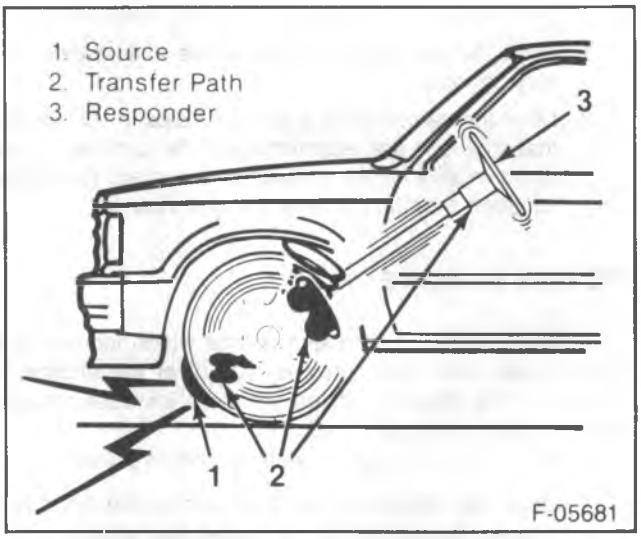

Figure 1—Vibration Source, Path, Responder

VEHICLE SPEED SENSITIVE

Most vibration complaints will be found to be vehicle speed sensitive: The frequency of the excitation depends only on the speed of the vehicle.

Vehicle speed sensitivity can be determined as follows:

1. Drive the vehicle in high gear and locate the vibration problem. Record the vehicle speed and the engine rpm at which the problem occurs.
2. Shift the vehicle into a lower gear and again locate the vibration problem. Record the vehicle speed and the engine rpm at which the problem occurs.
3. If the problem occurs at the same vehicle speed as when the vehicle was in high gear, the vibration is vehicle speed sensitive.
4. Neutral run up test in the stall.

ENGINE SPEED SENSITIVE

Another group of vibration complaints will be found to be engine speed sensitive. The frequency of the excitation depends only on the speed of the engine, independent of the speed of the vehicle.

Engine speed sensitivity can be determined as follows:

1. Drive the vehicle in high gear and locate the vibration problem. Record the vehicle speed and the engine rpm at which the problem occurs.
2. Shift the vehicle into a lower gear and again locate the vibration problem. Record the vehicle speed and the engine rpm at which the problem occurs.
3. If the problem occurs at the same engine rpm as when the vehicle was in high gear, the vibration is engine speed sensitive.

LOAD OR JOUNCE SENSITIVE

A load or jounce sensitive problem is one which varies in intensity as the height of the vehicle changes with respect to the surface of the road. The intensity varies as the springs are extended or compressed.

Load or jounce sensitivity can be determined as follows:

1. Drive the vehicle and observe the disturbance with varying load.
2. Drive the vehicle over a road that dips in such a way that it causes the rear of the vehicle to move up and down relative to the surface of the road. Keeping a constant throttle, observe the disturbance.

TORQUE SENSITIVE

A torque sensitive problem is one which increases in intensity as the torque (power) output of the engine increases. The intensity of the vibration increases as the throttle opening is increased.

Torque sensitivity can be determined as follows:

1. Drive the vehicle in high gear and locate the disturbance. Record the vehicle speed and engine rpm at which the problem occurs.
2. Observe the disturbance while varying the throttle position. That is, drive the vehicle with steady throttle, slowly increasing to heavy throttle by going up hill or applying the brakes while increasing the throttle opening and slowly decreasing to minimum throttle by coasting through the disturbance.
3. If the disturbance becomes more severe as the throttle opening is increased, the vibration is torque sensitive. This typically changes the pinion angle.

VIBRATION CLASSES

In the process of classifying vibration problems in terms of these four sensitivity categories, you will find that many problems fit more than one of the categories. Combining these categories into their possible combinations, then, the majority of all vibration problems will fall into one of the following "classes" of categories:

A. Engine Speed Sensitive Only
B. Vehicle Speed Sensitive Only
C. Torque Sensitive and Vehicle Speed Sensitive
D. Torque Sensitive and Engine Speed Sensitive
E. Torque Sensitive and Vehicle Speed Sensitive and Jounce Sensitive.

The first step, then, in correcting a vibration problem is to classify it in terms of one or more of the sensitivity categories and, on the basis of the sensitivity(ies) determined, place it in its proper "class" as designated by the letters A through E.

Having placed a given problem in a particular class, and knowing the speed or rpm at which the problem occurs or is most intense, further analysis can be made.

ORDERS OF VIBRATION

Some components may have more than one vibration at a given speed. These multiple vibrations are referred to as the order of vibration. The order of a vibration refers to the number of disturbances created by one rotation of a component. For example, a tire with one heavy spot will produce one disturbance each rotation - a first order vibration (figure 2). An oval shaped tire will produce two disturbances each rotation - a second order vibration (figure 2).

ROAD TESTING

To help diagnose and isolate the source of a vibration, it is important to road test the vehicle and use a systematic approach in narrowing down the possible causes of a vibration.

- When did the vibration start?
- Did the vibration start after a repair?

Exhaust System
Undercoating
Tire Repair or Replacement
Wheel Alignment
Engine Repair
etc.

- Is it a noise? Can it be heard as well as felt?
- What type of noise is it?
  - Buzz
  - Moan
  - Rattle
  - Squeak
- Where can the vibration be felt?
  - Seat
  - Floor
  - Steering Wheel
- Does the vibration occur on smooth or rough roads?
- When does the vibration occur?
  - Vehicle Speed Sensitive
  - Engine Speed Sensitive
  - Load or Jounce Sensitive
  - Torque Sensitive

These questions will give you a basic outline and will enable you to eliminate many components and focus attention on only those items that can be responsible for the conditions encountered.

Four major component groups are usually the cause of or are related to vibration. When a technician is road testing a vehicle for vibration, he must remember the four major component groups:

1. Engine and mounts.
2. Clutch and transmission.
3. Tires, wheels and brake drums.
4. Propeller shaft and universal joints.

Before road testing a vehicle, check the following:

1. In or out of phase propeller shaft.
2. All fasteners for tightness at universal joints, wheel lugs and engine mounts.
3. Tire air pressure.
4. Load conditions.

ROAD TEST

A technician should road test the vehicle to diagnose the complaint. Refer to "Reed Tachometer" in this section. Record the speed and rpm at which the greatest vibration occurs. The vibration is likely to be in the steering wheel or in the seat bottom. The road test can be helpful in locating the vibration source either forward or aft.

COAST TEST

Drive the vehicle past the vibration speed, shift into neutral and coast back through the vibration speed. In this test two kinds of vibrations normally occur; a shaking or a buzzing. A shaking vibration is usually caused by tires or a wheel and brake drum/disc assembly problem. A buzzing vibration is usually caused by a driveline problem.

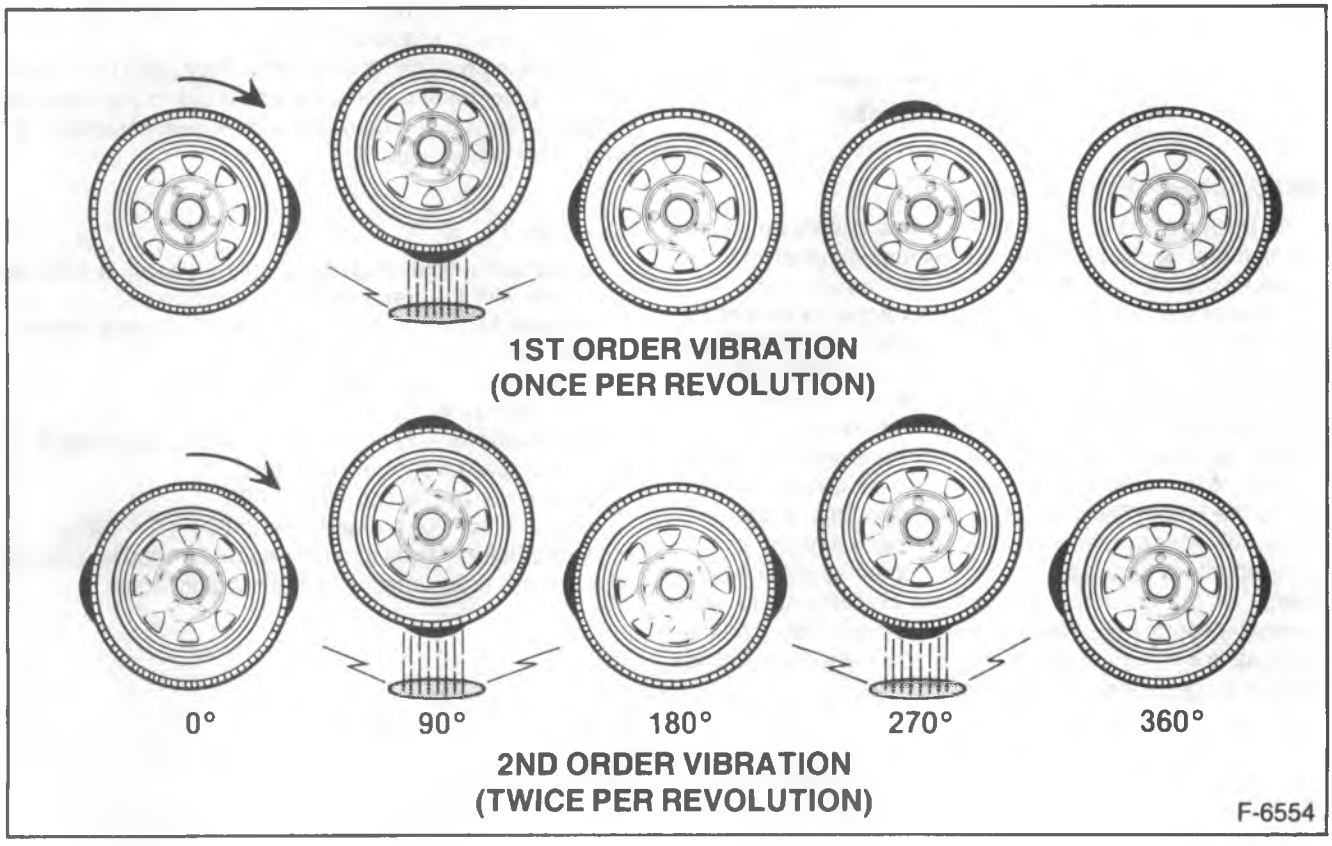

Figure 2—Order of Vibration

REED TACHOMETER

To aid in the diagnosis of vibrations a Reed Tachometer can be used to identify the frequency of a rotational component with a repetitive vibration.

The Biddle Frahm Reed Tachometer (or equivalent) measures vibration in cycles per minute (CPM) (figure 3). It consists of two rows of reeds. Each row is designed to vibrate at a particular frequency.

If you can match the rotational speed of a particular component with the frequency reading of the Reed Tachometer, you will know in which area to concentrate your efforts for repairs.

These frequency relationships exist for all vibrations that occur in a vehicle and understanding these relationships can often solve difficult vibration problems.

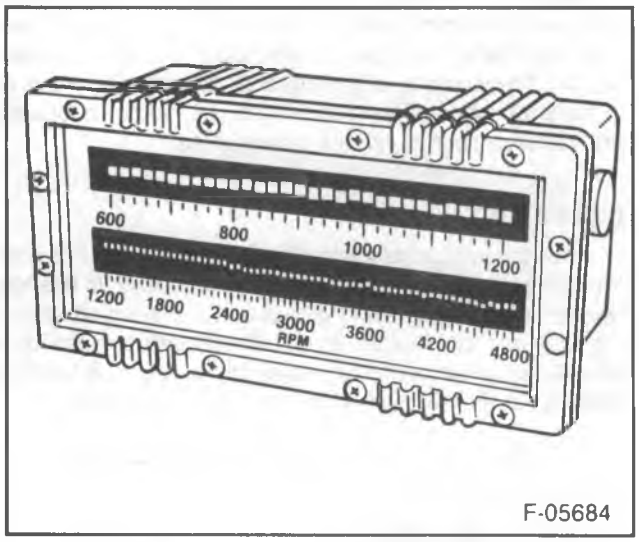

Figure 3—Reed Tachometer

REED TACHOMETER USAGE

In truck applications, experience has shown the Reed Tachometer can be placed on the instrument panel for ease of viewing and for effective pickup of a vibration. However, if a vibration exists and the vibration frequency cannot be read with the Reed Tachometer on the dash, the Reed Tachometer can be placed in other locations that may be responding to the source of the vibration. To reduce the effect of road input on the Reed Tachometer, vehicles should be test driven on a smooth road (preferably asphalt).

One of the most important things to be aware of when using the Reed Tachometer for the first time is that the reeds are very sensitive and will pick up many low amplitude vibrations (figure 4). These will appear as slight movements of many reeds, and do not correspond to any particular component. Reed movement that corresponds to a vibrating component will be greater in amplitude, traveling the full range of the viewing area.

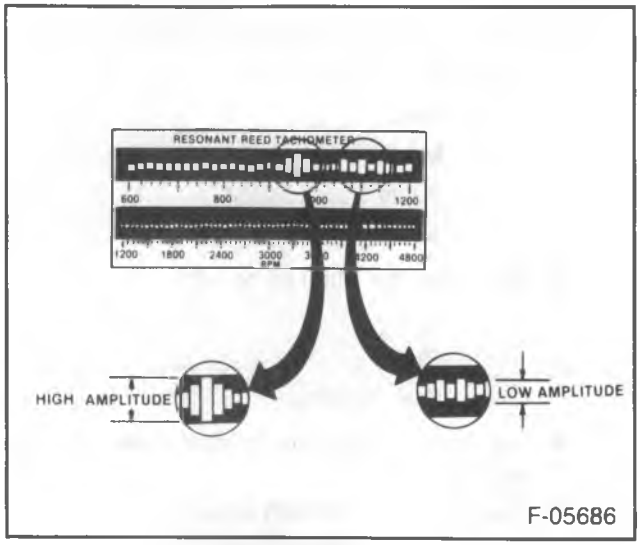

Figure 4—Amplitude

The following examples illustrate two typical applications of a Reed Tachometer.

Example 1

Road test reveals low frequency (shake) vibration at 2400 engine rpm with the transmission in direct drive.

Known facts - Reed Tachometer frequency reads at 800 cycles per minute (figure 5).

Vibration is vehicle speed sensitive.

Rear end ratio 3.0 to 1.

Calculations - First order of tire and rear end: 2400 rpm÷3.0 rear axle ratio=800 rpm.

First order of propshaft: 2400.

Conclusion - The vibration frequency (800) is related to the first order rotation of the tire/wheel assembly. Given this relationship, you can correct the tire/wheel assembly for a first order disturbance.

Example 2

Road test reveals high frequency vibration at 2400 engine rpm with the transmission in direct drive.

Known facts - Reed Tachometer frequency reads at 1600 cycles per minute (figure 6).

Vibration is vehicle speed dependent.

Rear end ratio 3.0 to 1.

Calculations - First order of tire and rear end: 2400 rpm÷3.0 rear axle ratio=800 rpm.

First order of tire and wheel: 800.

Second order of tire and wheel: 800 x 2=1600.

Conclusion - The vibration frequency 1600 is related to the second order rotation of the tire and wheel.

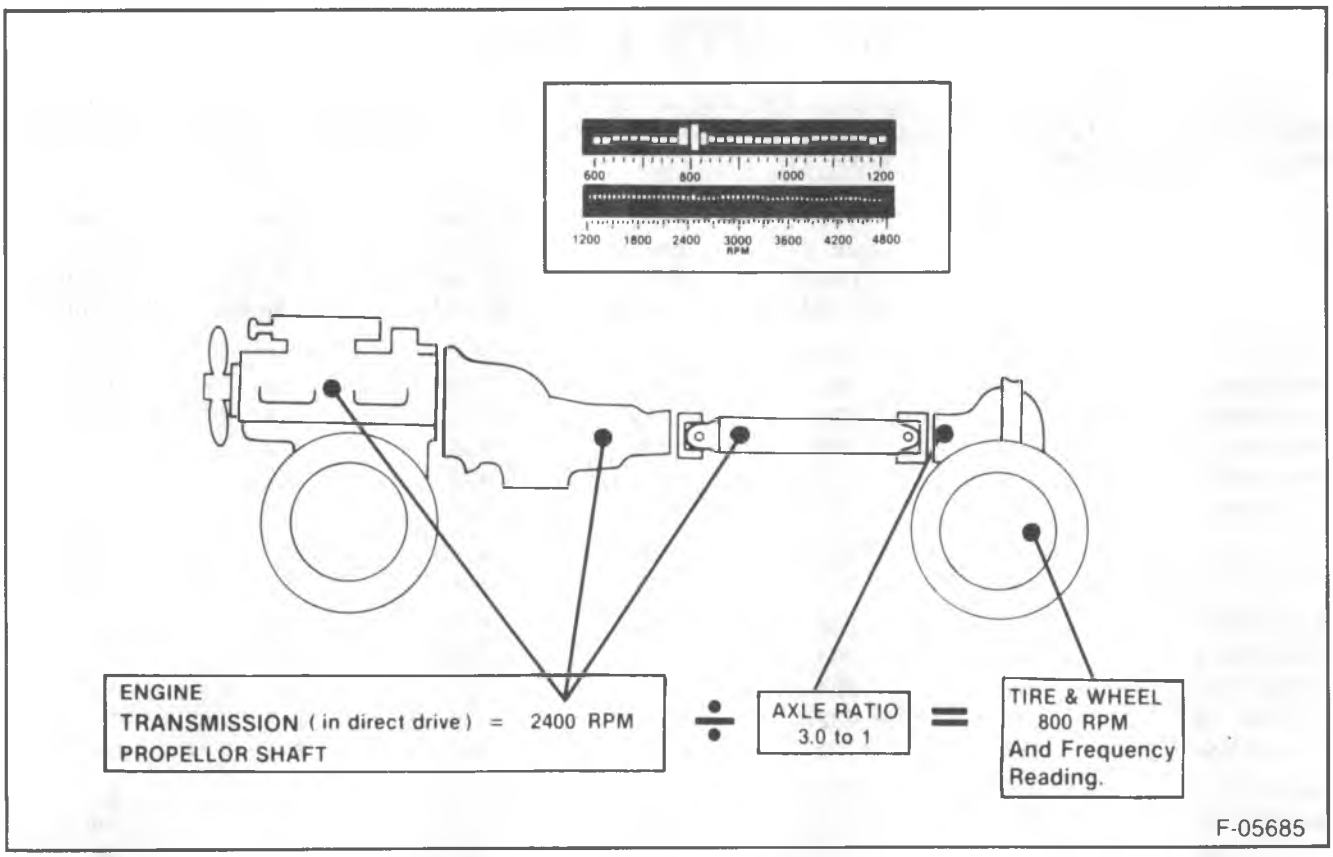

Figure 5—Reed Tachometer 1st Order Vibration

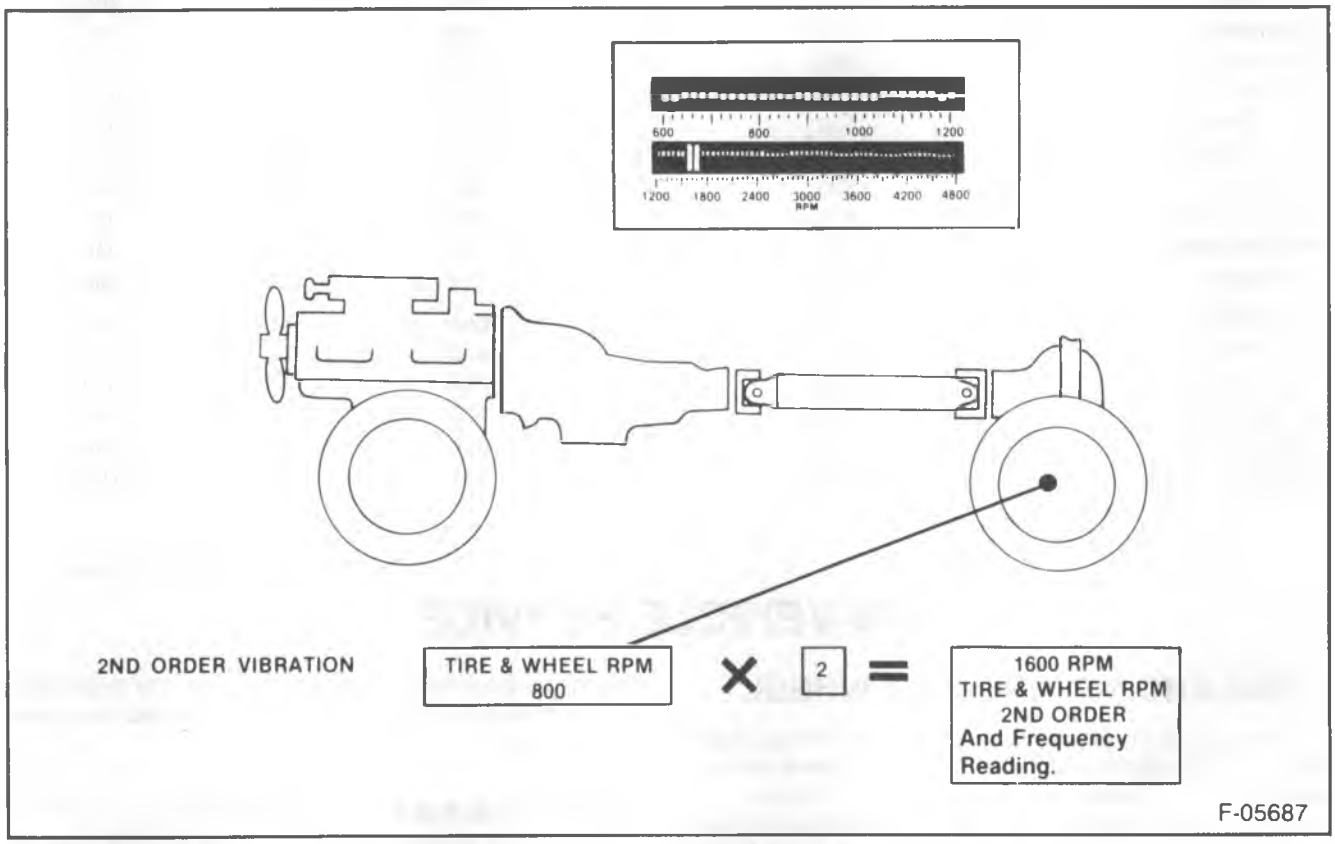

Figure 6—Reed Tachometer 2nd Order Vibration

TIRE SPEED CHART

Tire rpm can be used to calculate engine rpm if no engine tachometer is available when using a Reed Tachometer for vibration diagnosis. Multiplying tire rpm at a given speed by the axle ratio will give engine rpm. Example: P155/80R13 @ 45 mph (72 kmh) does 686 rpm x 3.08 ratio = 2113 engine rpm.

Tire Size	Tire rpm @ 45 mph (72 kmh)	Tire rpm @ 50 mph (80 kmh)	Tire rpm @ 55 mph (88 kmh)	Tire rpm @ 60 mph (96 kmh)	Tire rpm @ 65 mph (105 kmh)	Tire rpm @ 70 mph (112 kmh)
P155/80R13	686	762	838	914	991	1067
P175/70R13	691	768	845	922	998	1075
P175/80R13	653	726	799	871	944	1016
P185/80R13	637	708	779	850	920	991
P195/70R13	659	732	805	878	952	1025
P205/70R13	648	720	792	864	936	1008
P185/75R14	626	696	766	835	905	974
P195/75R14	610	678	746	814	881	949
P195/70R14	626	696	766	835	905	974
P205/75R14	599	666	733	799	866	932
P205/70R14	616	684	752	821	890	958
P205/60R14	659	732	805	878	952	1025
P215/60R14	648	720	792	864	936	1008
HR78-15D	565	628	680	742	803	865
P195/75R15	589	654	719	785	850	916
P205/75R15	578	642	706	770	819	899
P215/75R15	567	630	693	756	897	802
P215/60R15	621	690	759	828	866	966
P215/65R15	599	666	733	799	866	932
P215/56HR15	599	666	733	799	866	932
P225/70R15	572	636	670	763	827	890
P225/70HR15	572	636	670	763	827	890
P225/75R15	551	612	673	734	796	857
P235/75R15	540	600	660	720	780	840
P255/50VR16	599	666	733	799	866	932
P245/50VR16	610	678	746	814	881	949
P235/85R16	491	546	601	655	710	764
LT215/85R16	513	570	627	684	741	798
LT235/85R16	486	540	594	648	702	756
LT225/75R16	531	590	649	708	767	826
LT245/75R16	504	560	616	672	728	784
LT265/75R16	486	540	594	648	702	756
7.50-16	486	540	594	648	702	756

TB-3120-2A

ON-VEHICLE SERVICE

BALANCING TIRE AND WHEEL

There are two types of tire and wheel balancing, static and dynamic. Static balance is the equal distribution of weight around the wheel. Assemblies that are statically unbalanced caused a bouncing action called wheel tramp (figure 7). This condition will eventually cause uneven tire wear.

Dynamic balance is the equal distribution of weight on each side of the centerline so that when the assembly spins there is no tendency for it to move from side to side (figure 8). Assemblies that are dynamically unbalanced may cause wheel shimmy.

GENERAL BALANCE PRECAUTIONS

Deposits of foreign material must be cleaned from the inside of the wheel. Stones should be removed from the tread in order to avoid operator injury during spin balancing and to obtain a good balance. The tire should be inspected

for any damage, then balanced according to the equipment manufacturer's recommendations.

Whenever a heavier, solid locking wheel nut is used to replace a standard nut, it should be installed nearest the valve stem, and a 14 grams (1/2-ounce) balance weight should be added 180 degrees opposite the locking nut on the wheel's inboard side.

When rotating tires, always install the locking nut nearest the tire valve stem so that it remains opposite the balance weight. This procedure will improve the wheel balance by compensating for the heavy locking wheel nut.

OFF-VEHICLE BALANCING

Most electronic off-vehicle balancers are more accurate than the on-vehicle spin balancers. They are easy to use and give a dynamic (two plane) balance. Although they do not correct for drum or rotor unbalance as does on-vehicle spin balancing, this is overcome by their accuracy. When balancing off-vehicle, the wheel should locate on the balancer with a cone through the back side of the center pilot hole (not by the wheel stud holes).

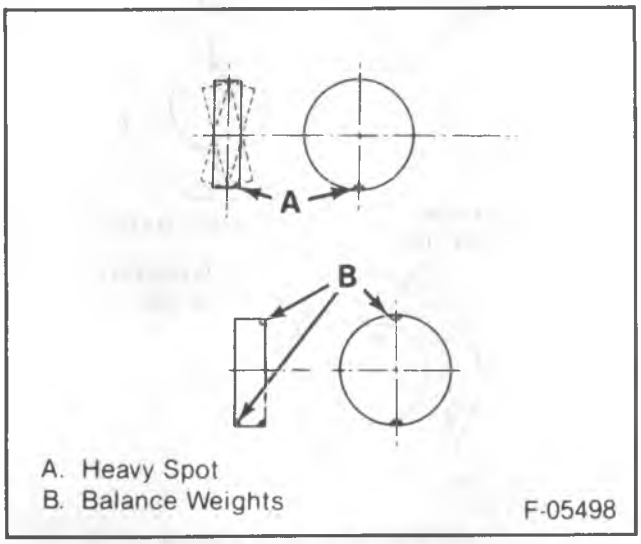

Figure 7—Static Unbalance

ON-VEHICLE BALANCING

When needed, on-vehicle balar[illegible] will help correct vibrations due to brake drum [illegible]tor and wheel cover imbalance.

When balancing on-vehicle remove the balance weights from the off-vehicle dynamic balance. If more than 28 grams (one ounce) of additional weight is required, it should be split between the inner and outer rim flange.

NOTICE: The driven tire and wheel assemblies should be spun using the engine. Limit speed as stated in the following Caution.

CAUTION: Do not spin the drive wheels faster than 35 mph (55 km/h) as indicated by the speedometer. This limit is necessary because the speedometer indicates only one-half of the actual wheel speed when one drive wheel is spinning and the other drive wheel is stopped. Personal injury and damage may result from high speed spinning.

CAUTION: On vehicles equipped with limited slip rear axles, do not attempt to balance a tire on a drive wheel with the other drive wheel on the ground. The vehicle may drive through this wheel and cause the vehicle to move unexpectedly, resulting in personal injury and property damage.

To distinguish between standard rear axle and a limited slip rear axle, check for Pasitraction (G80) on Service Parts Identification label.

WHEEL WEIGHTS

If more than 85 grams (3 ounces) are needed, the wheel weights should be split as equal as possible between the inboard and outboard flanges.

Balancing of assemblies with factory aluminum wheels requires the use of special clip-on type wheel weights. These weights are designed to fit over the thicker rim flange of the aluminum wheel.

Adhesive wheel weights are also available. Use the manufacturer's procedure to install adhesive wheel weights.

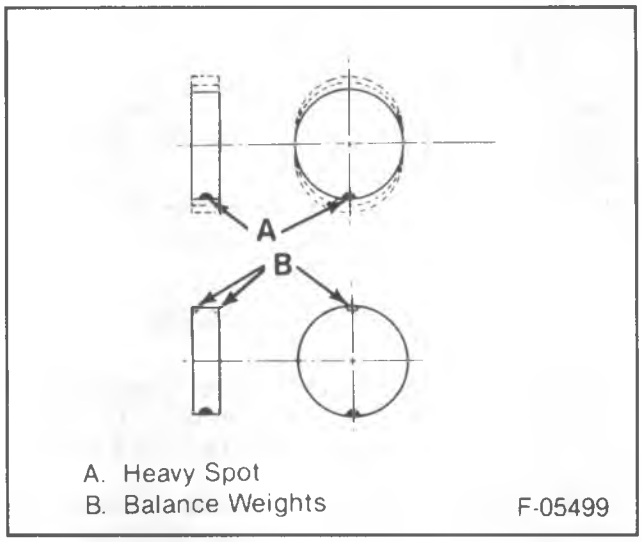

Figure 8—Dynamic Unbalance

WHEEL RUNOUT

Wheel runout should be measured with an accurate dial indicator. Measurements may be taken with the wheel installed on or off the vehicle using an accurate mounting surface such as on a wheel balancer. Measurements may also be taken with or without the tire mounted on the wheel.

Radial runout and lateral runout should be measured on both the inboard and outboard rim flanges (figure 9). With the dial indicator firmly in position, slowly rotate the wheel one revolution and record the total indicator reading. If any measurement exceeds specifications, and there is vibration that wheel balancing will not correct, the wheel should be replaced. Disregard any indicator readings due to welds, paint runs, scratches, etc.

- STEEL WHEELS
  Radial runout .040″
  Lateral runout .045″
- ALUMINUM WHEELS
  Radial runout .030″
  Lateral runout .030″

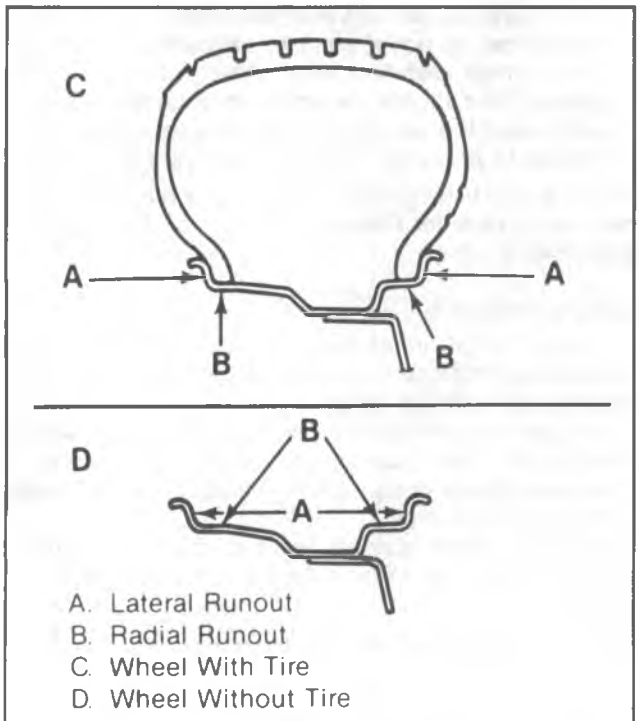

Figure 9—Wheel Runout

MATCH MOUNTING

Tires and wheels are "match-mounted" at the assembly plant. This means that the radially stiffest part of the tire, or "high spot," is matched to the smallest radius or "low spot" of the wheel.

The "high spot" of the tire is originally marked by a yellow paint mark or adhesive label on the outboard sidewall.

The "low spot" of the wheel will be at the location of the valve stem.

Before dismounting a tire from its wheel, a line should be scribed on the tire at the valve stem to assure that it is remounted in the same position.

Match mounting is a technique used to reduce radial or lateral runouts on tire/wheel assemblies and other assembly/vehicle areas. Excessive runout is a source of ride complaints and match mounting can be used to minimize the runout. There are two ways to accomplish match mounting: 1) positioning of the tire on the wheel; and 2) positioning the assembly on the hub. Each method is discussed here.

Tire to Wheel

First determine the runout which needs to be minimized If radial runout is the problem, take a measurement on the center tread rib (this is normally a solid rib, easy to measure and normally indicative of what the tire as a whole is like ... but keep in mind that any rib with excessive runout can cause a problem). If lateral runout is the problem, take a measurement on the sidewall just below the edge of the shoulder tread pattern. Record the runout magnitude and put a crayon mark at the high spot location on the tire and also on the wheel (figure 10).

Take the assembly to the tire mounting machine. Put a reference crayon mark on the sidewall at the valve location. Break the assembly down and rotate the tire 180 degrees (half way around) on the rim so that the valve reference mark is opposite the valve stem (figure 10). Reinflate the tire and measure the runout in question. Record the magnitude and mark the high spot location on the tire.

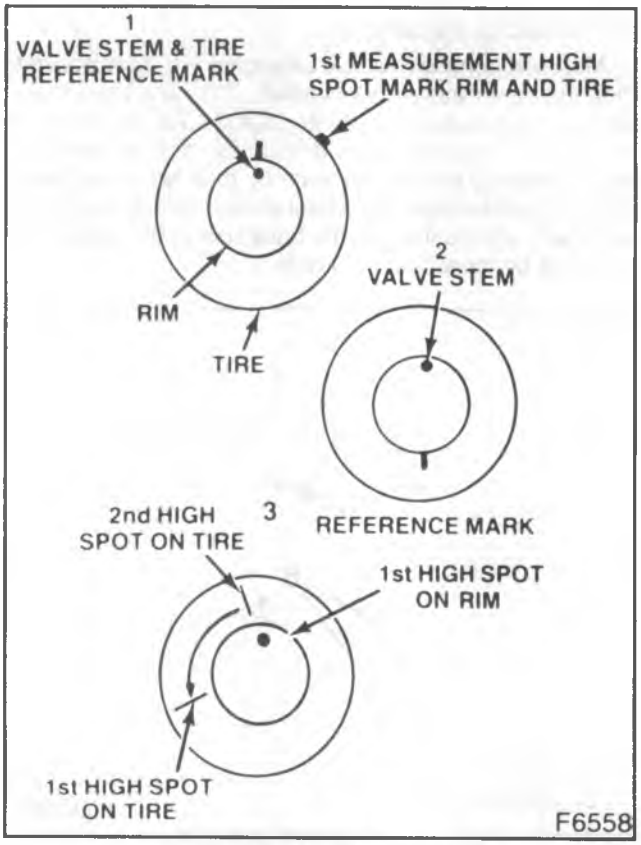

Figure 10—Match Mounting

If the runout is reduced below acceptable quidelines, you have solved the problem. If the runout is still excessive, you will do one of the following three (3) procedures:

1. If the high spot is within 4-inches of the first high spot on the **tire** and is still outside of guidelines, replace the **tire**.
2. If the high spot is within 4-inches of the first high spot on the **wheel**, the wheel may be out of tolerance, remove the tire and check the **wheel** for runout. Refer to "Wheel Runout" in this section.
3. If the high spot is not within 4-inches of either original high spots on the tire or wheel then draw an arrow from the second high spot to the first high spot (in the shortest direction, figure 10), and rotate the tire on the rim 90 degrees (1/4 turn) in that direction. This will normally reduce the runout to an acceptable figure.

   In the majority of cases, the first 180 degrees turn of the tire will either fix the problem or indicate which item to replace.

CORRECTING NON-UNIFORM TIRES

There are two ways to correct tires which cause a vibration even though they are properly balanced. One method uses an automatic machine which loads the tire and buffs small amounts of rubber from high spots on the outer two tread rows. Correction by this method is usually permanent and, if done properly, does not significantly affect the appearance of tire tread life.

Another method is to dismount the tire and rotate it 180 degrees on the rim. It is important that this be done on tire and wheel assemblies which are known to be causing a vibration as it is just as likely to cause good assemblies to vibrate. Refer to "Match Mounting" in this section.

HUB AND AXLE SHAFT STUD RUNOUT

Figure 11

When wheel and tire runout occurs on the vehicle and does not occur in the off-vehicle testing, the hub and axle shaft should be checked.

MEASURING ROTOR OR AXLE SHAFT RUNOUT

Install or Connect

The dial indicator on the machined surface outside the bolts on the rotor or axle flange.

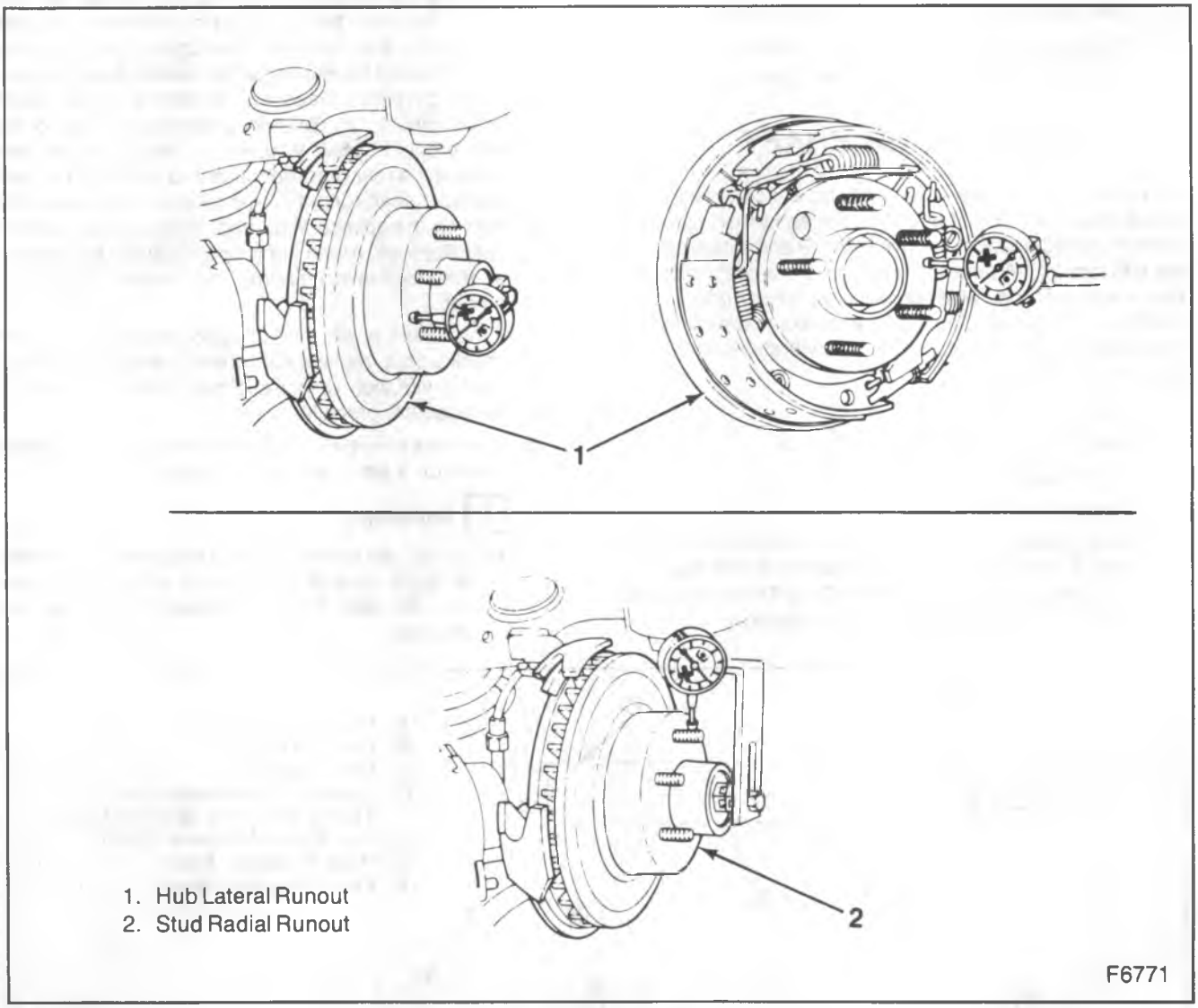

Figure 11—Hub and Axle Shaft Stud Runout

Measure

1. Turn the rotor or axle flange to locate the low spot.
2. Zero the dial indicator.
3. Turn the rotor or axle flange to check the total lateral runout.
   - .005-inch is the acceptable lateral runout.

MEASURING AXLE SHAFT STUD RUNOUT

Install or Connect

The dial indicator to contact the wheel mounting studs (figure 11).

Measure

1. Turn the hub to register on each of the studs.
2. Zero the dial indicator on the lowest stud.
3. Check the total runout on the remaining studs. .030-inch is the acceptable radial runout.

PROPELLER SHAFT

Driveline vibrations will generally be a high speed vibration, a "Buzz" or a "Shudder." With tire and wheel speeds in the 45-50 mph range, the average tire and wheel speeds are 600 rpm (±). A driveline because of the gear ratios, will turn at a higher rpm. Most driveline vibrations occur in the 45-55 mph range, with the most troublesome area on either acceleration or deceleration. Driveline vibrations come from four general areas:

1. Shaft Balance.
2. Shaft Runout/Pinion Flange Runout.
3. Joint Phasing.
4. Driveline Angles.
   Most driveline vibrations that are associated with a "Buzz" or "Shudder" type vibration will also have a high frequency reading on the Reed Tachometer. Refer to "Reed Tachometer" in this section.

PROPELLER SHAFT RUNOUT CHECK

Noise vibration at high speed could be caused by a bent propeller shaft. The propeller shaft could have been damaged by rough handling or a collision. Check for propeller shaft straightness.

1. Raise the vehicle on a twin post hoist so the wheels can spin.
2. Attach a dial indicator having a magnetic base to a smooth place on the vehicle underbody.
3. Take dial indicator readings at the propeller shaft check points (figure 12).

   Important

   - Do not attach the dial indicator base at a weld.
4. With the transmission in neutral, hand rotate the axle pinion flange or the transmission yoke and take the necessary dial indicator readings on the propeller shaft. Record the readings. For models having a two-piece driveline, measure the rear propeller shaft runout (figure 12). Reference mark the position of the rear propeller shaft yoke to the pinion flange, then remove the rear propeller shaft and measure the front propeller shaft runout on the tube and at the tapered hole on the splined shaft end. If the runout exceeds specifications, rotate the propeller shaft 180 degrees at the companion flange and install. Check the runout.
5. If the runout is still over specification at one or more check points, replace the propeller shaft after checking for vibration or noise. Check the runout on the replacement propeller shaft.
6. If the new propeller shaft runout is over specification, check for a bent companion flange.

   Important

   - The splined end of the front propeller shaft is critical to the smooth operation of a two-piece driveline. Be sure the dial indicator readings are accurate.

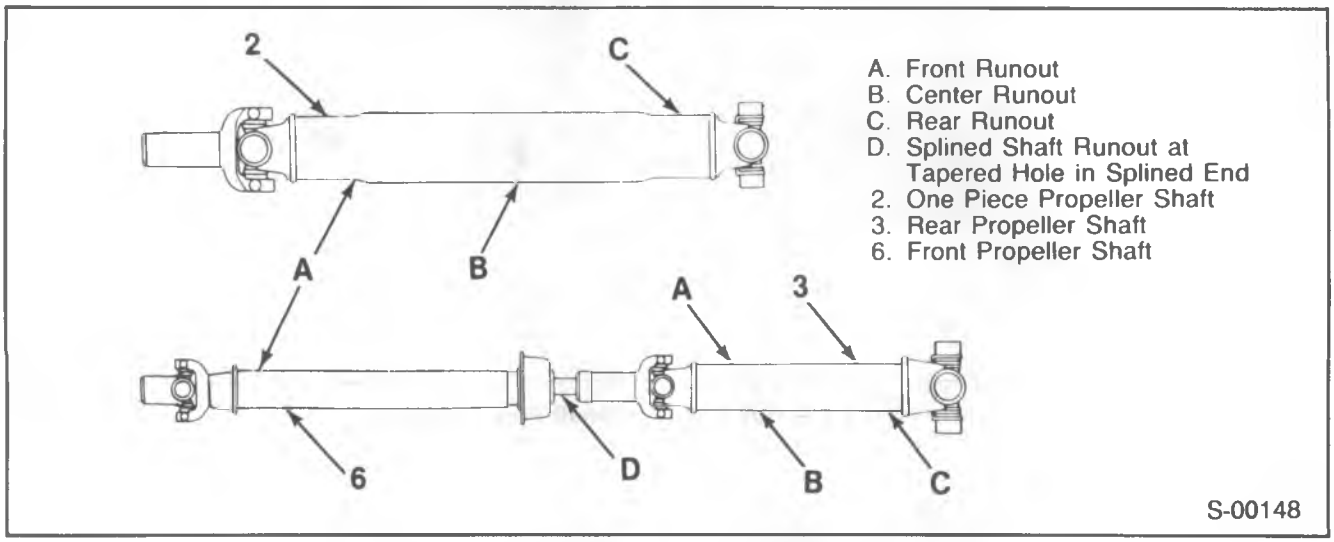

Figure 12—Checking Propeller Shaft Runout

PROPELLER SHAFT BALANCE CHECK

- Raise the vehicle on a twin post hoist so the wheels can spin.

Remove or Disconnect

1. Tire and wheel assemblies and the brake drums.
   - **DO NOT APPLY THE BRAKE WITH THE DRUMS REMOVED.**

Inspect

- Propeller shaft, universal joints and attachments for mud, undercoating or loose fasteners.

Clean

- Propeller shaft, universal joints and attachments.

Tighten

- Any loose attachments or fasteners.

Important

- Run the vehicle in gear at the speed where the disturbance peaks; observe the intensity of the disturbance as indicated by the Reed Tachometer. The greater the disturbance, the greater the amount of amplitude that will be seen on the Reed Tachometer. Refer to "Reed Tachometer" in this section.
- Stop the engine.

2. Propeller shaft.
   - Rotate the propeller shaft 180 degrees from the original position.

Install or Connect

1. Propeller shaft.
   - Determine the position which gives the lowest amplitude reading on the Reed Tachometer.
2. Rear drums, wheels and tire assemblies.
   - Determine the position which gives the best driveline response by road testing the vehicle for a final check of the propeller shaft balance.
   - For unacceptable balance, refer to "Propeller Shaft Balancing."

PROPELLER SHAFT BALANCING

Hose Clamp Method (Figures 13 and 14)

1. Place vehicle on a twin post hoist so that the rear of the vehicle is supported on the rear axle housing and the rear wheels are free to rotate. Remove both rear wheel assemblies and reinstall wheel lug nuts with flat sides next to drums.
2. Mark and number propeller shaft at four((4) points 90 degrees apart at rear of propeller shaft just forward of balance weights (figure 13).
3. Install two (2) hose clamps on the rear of the propeller shaft and slide them rearward until the clamps stop at the nearest balance weight welded to the tube. Align both clamps at any one of the four marks made on shaft in Step 2 and tighten.
4. Run the vehicle through the speed range to 50-55 mph (81-89 km/h). Note amount of imbalance felt at front of axle housing or as indicated by a reed tachometer.

CAUTION: Never run vehicle higher than 55 mph (89 km/h). All persons should stay clear of universal joints and balance weight areas to avoid possible injury. Do not run on hoist for extended periods due to the danger of overheating the transmission or engine.

5. Loosen clamps and rotate clamp heads 90 degrees to the next mark on the propeller shaft. Tighten clamps and repeat Step 4.
6. Repeat Step 5 until vehicle has been run with clamp heads located at all four marks on shaft.
7. Position clamps at point of least imbalance. Rotate the clamp heads away from each other 45 degrees (one on each side of the position), (figure 14). Run the vehicle and note if imbalance has improved.

   In some cases it may be necessary to use one clamp or possibly three clamps in order to obtain a good balance. Replace propeller shaft if three hose clamps do not improve the imbalance.
8. Continue to rotate the clamps apart in smaller angular increments until the imbalance is at its minimum.
9. Reinstall wheel assemblies and road test the vehicle for final check of balance. A minimal vibration felt in the vehicle on the hoist may not show up during a road test.

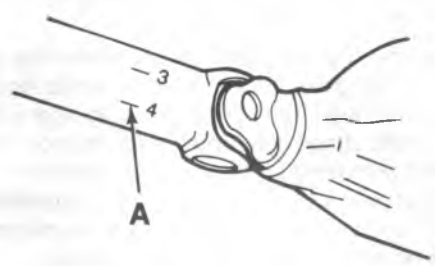

A. REFERENCE MARKS

S-00226

Figure 13—Propeller Shaft Reference Marks

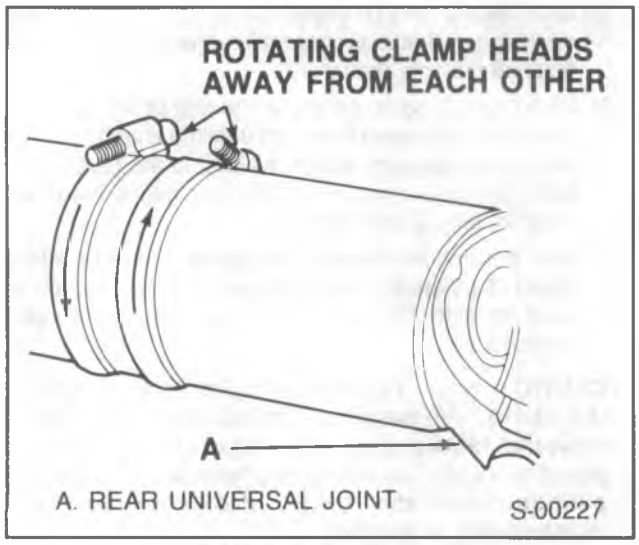

Figure 14—Rotating Hose Clamp

STROBE LIGHT METHOD (Figures 15 and 16)

If a wheel balancer of the strobe light type is available, the use of such a unit will facilitate the balancing of the propeller shaft. The balance pick-up unit should be placed directly under the nose of the rear axle carrier and as far forward as possible.

1. Place the vehicle on a twin post hoist so the rear of the vehicle is supported on the rear axle housing and the rear wheels are free to rotate. Lower rear hoist and allow axle to rest on jackstands. The groove in the rear hoist fixture could clamp hoist the axle and destroy the sensitivity of the operation. Remove both rear wheel assemblies and reinstall wheel lug nuts with flat sides next to the drums.
2. Mark and number propeller shaft at four (4) points 90 degrees apart at rear of propeller shaft just forward of balance weights, as shown.
3. Place the strobe light wheel balancer pick-up under the nose of the carrier (figure 15).
4. Run vehicle in gear at the speed where the disturbance is at its peak, as indicated by driver input and by use of a Reed Tachometer holding at a constant speed. Point strobe light up at the spinning propeller shaft and note position of one of the reference numbers. Shut off engine and position the propeller shaft so the reference numbers will be in the same position as was noted while the shaft was rotating.

   When strobe light flashed, the heaviest point of the propeller shaft was at the bottom (6 o'clock). To balance the propeller shaft, it would be necessary to apply the balancing weights (hose clamps) 180 degrees away from the heaviest point or at the top of the propeller shaft (12 o'clock).
5. Install two screw-type hose clamps on the propeller shaft as close to the rear as possible. Position both clamp heads 180 degrees from the heaviest point of propeller shaft as indicated by strobe light. Tighten clamps.

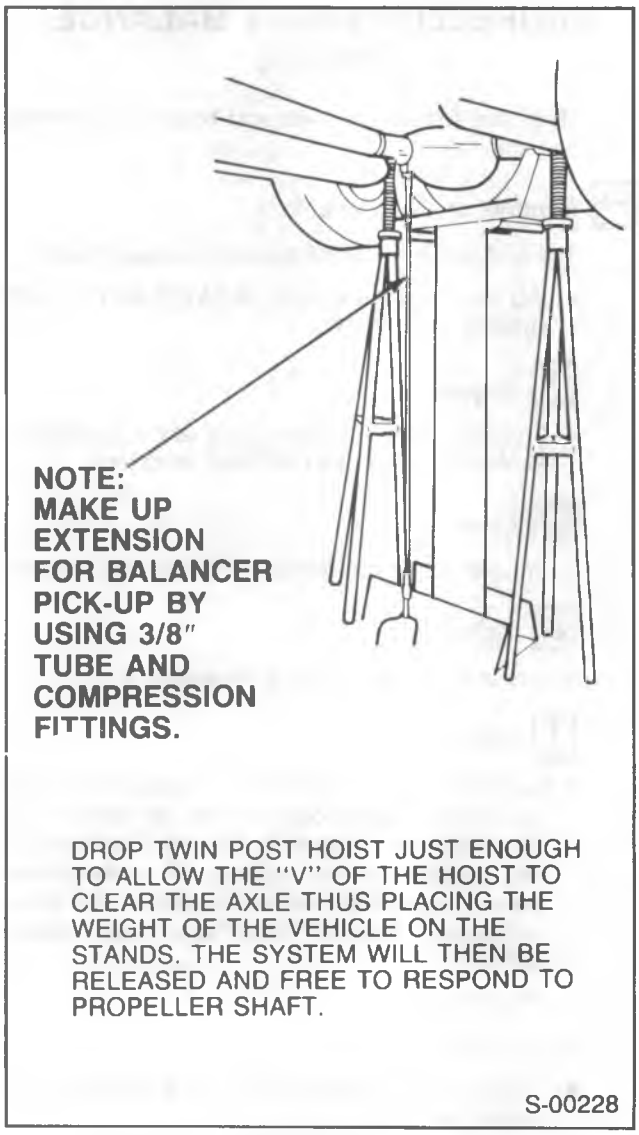

Figure 15—Pick-Up Unit Replacement

6. Run vehicle through the speed range, if disturbance is gone, nothing further need be done on the hoist. If the disturbance is not gone and the strobe light shows the clamp heads at the bottom (6 o'clock) of the propeller shaft, go to Step 7. If the strobe light shows the two clamp heads at the top of the propeller shaft, add one more hose clamp and recheck. If the strobe light shows the three clamp heads at the top of the propeller shaft, remove the propeller shaft and reindex it 180 degrees on the rear axle pinion companion flange. Recheck with no clamps. Repeat balance starting with Step 5. If the propeller shaft still needs more than three hose clamps at the same clock position, replace it if the clamps are also 180 degrees from their original position after the propeller shaft was reindexed 180 degrees, the rear axle pinion companion flange is out of balance and must be replaced. DO NOT use more than three hose clamps to balance the propeller shaft. If the strobe light shows the hose clamps at the bottom of the propeller shaft, but the disturbance still exists, go to Step 7.

7. Rotate two of the hose clamps equally away from each other toward the top (one on each side of the position) in small increments until the best balance is achieved (figure 16).

   In some cases it may be necessary to use one clamp or possibly three clamps in order to obtain a good balance.

   Replace the propeller shaft if three hose clamps do not correct the problem.

8. Install wheels and road test vehicle for final check of balance.

   Vibration felt in the vehicle on the hoist may not show up during a road test.

PROPELLER SHAFT PHASING

The propeller shaft is designed and built with the yoke lugs (ears) in line with each other. This design produces the smoothest running shaft possible, and is called phasing. (Figure 17).

Vibration can be caused by an out of phase propeller shaft. The propeller shaft will absorb vibrations from speeding up and slowing down each time the universal joint goes around. A total cancellation of vibration produces a smooth flow of power in the driveline.

DRIVELINE ANGLES

When two shafts intersect at any common universal joint, the bend that is formed is called the working angle. (figure 18). The larger the working angle, the larger the amount of acceleration and deceleration of the universal joint. For every revolution of the propeller shaft there are two accelerations and deceleration of the universal joints. This speeding up and slowing down of the universal joint must be cancelled out to produce a smooth power flow. This is done through Phasing and proper universal joint working angles.

MEASURING DRIVELINE ANGLES

Driveline angles can be measured using an inclinometer. The vehicle should be supported at curb weight with a full tank of gasoline. The J 23498 inclinometer is installed on the propeller shaft bearing cap. A J 24479 magnetic base can be used on the propeller shaft tube (figure 19).

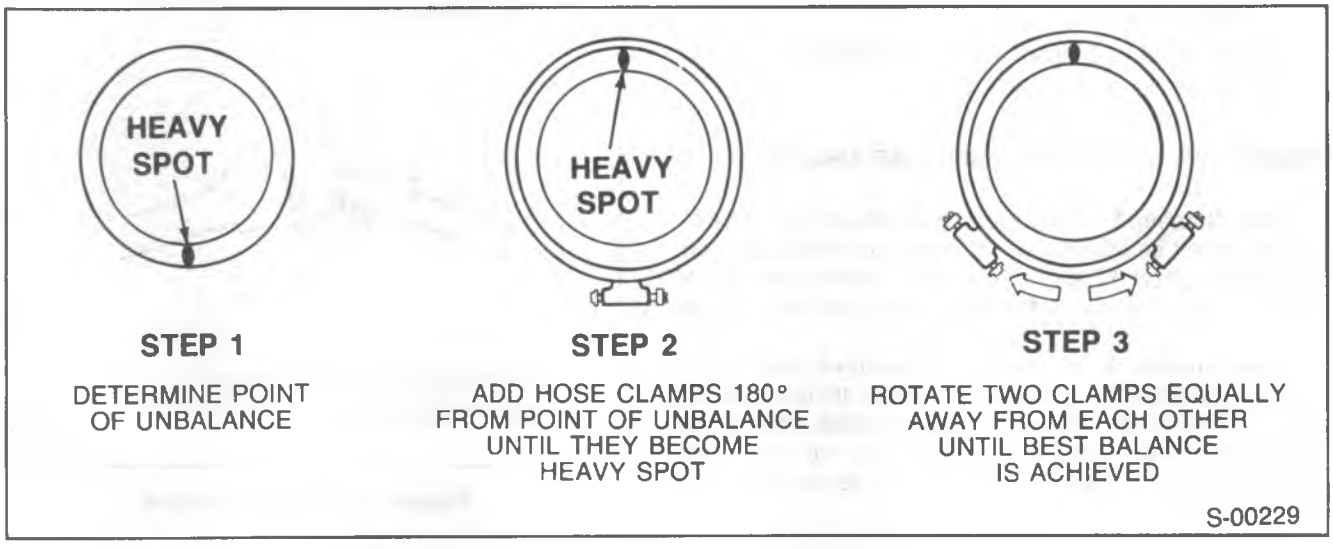

Figure 16—Positioning Hose Clamps to Achieve Best Balance

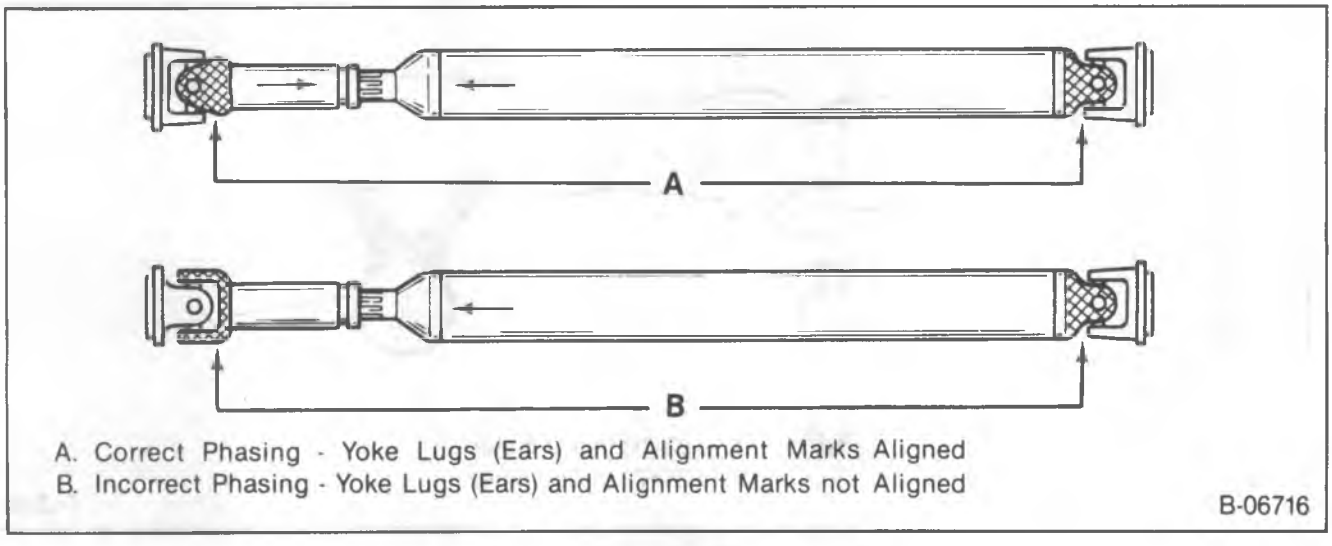

Figure 17—Phasing

ANGLE AT REAR UNIVERSAL JOINT

1. Place inclinometer J 23498 on rear propeller shaft bearing cap (figure 20). Center bubble in sight glass and record measurement. Bearing cap must be straight up and down and free of dirt or other foreign material to obtain an accurate measurement.
2. Rotate propeller shaft 90 degrees and place inclinometer on rear drive yoke bearing cap, (figure 21). Center bubble in sight glass and record measurement.
3. Subtract small figure from larger figure to obtain the rear universal joint angle.

ANGLE AT FRONT UNIVERSAL JOINT

1. Place inclinometer on front propeller shaft bearing cap, (figure 22). Center bubble in sight and record measurement.
2. Rotate propeller shaft 90 degrees and place inclinometer on front slip spline yoke bearing cap, (figure 23). Center bubble on sight glass and record measurement.
3. Subtract smaller figure from larger figure to obtain the front universal joint angle.

RULES FOR MEASURING DRIVELINE ANGLES

Rule Number 1 — The working angles of each pair of U-joints must be within one-half degree of being equal on shafts that turn at 3,200 rpm or higher, or within one degree of being equal on shafts that turn at speeds below 3,200 rpm.

Rule Number 2 — (Involves a two drive shaft, three U-joint system.) With a three-joint system there is always an odd joint that cannot be paired with another joint. Since the U-joint between the transmission and the front shaft does not have a mate to cancel out its acceleration and deceleration, this front shaft should be within one-half degree of the transmission angle for high-speed shaft and within one degree for low-speed shafts. If the rear-end pinion angle is not equal to either the engine/transmission angle or front shaft angle, it should be at an angle between those two. There can be one-half degree difference between the center and rear U-joint working angles provided neither of the working angles exceeds 4 degrees on high-speed shafts, or 5 degrees on low-speed shafts.

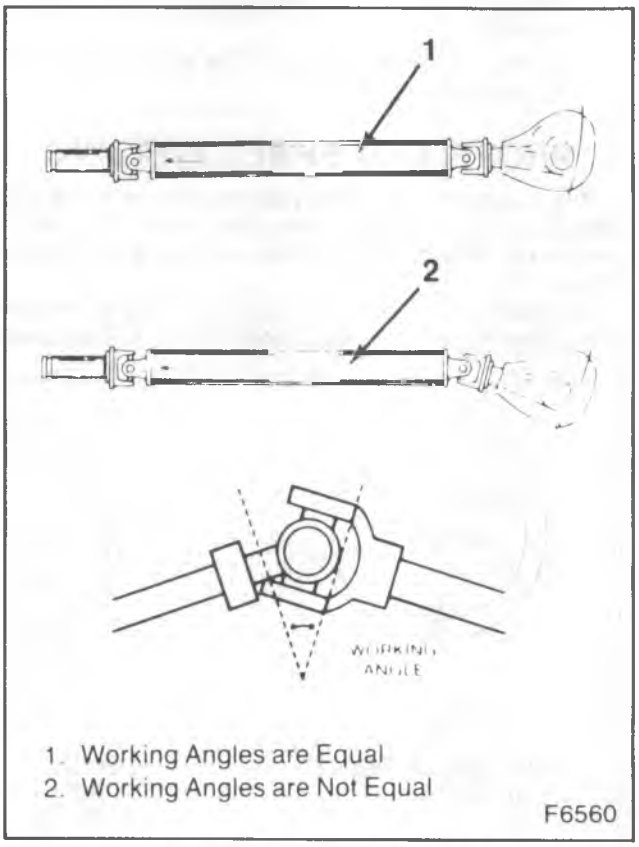

Figure 18—Working Angles

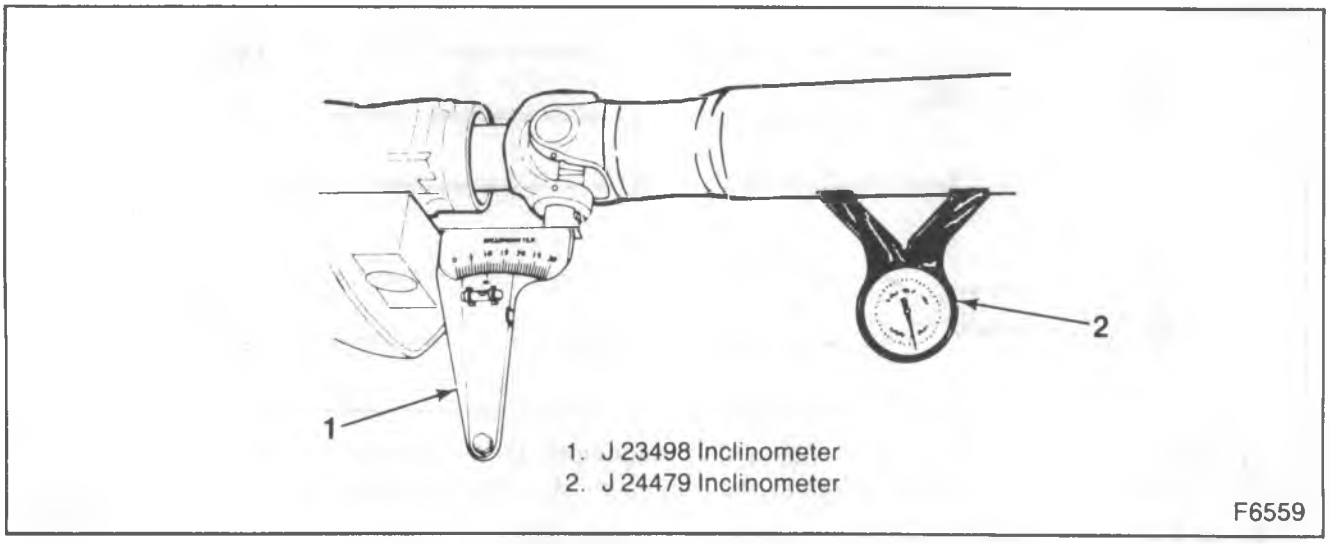

Figure 19—Measuring Driveline Angles

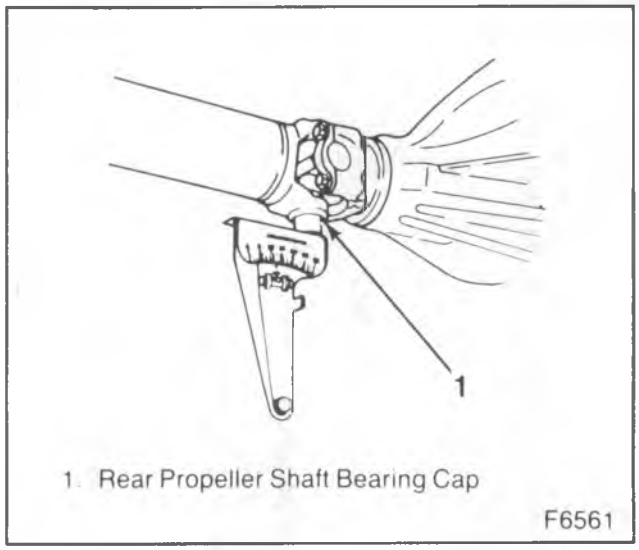

Figure 20—Measuring Rear U-Joint Working Angle

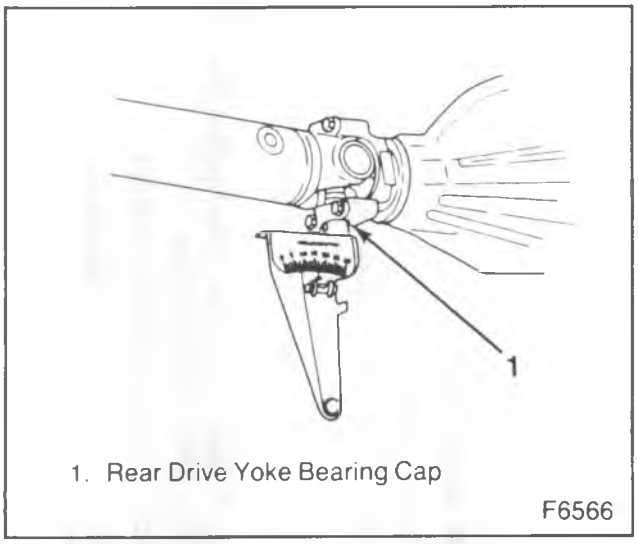

Figure 21—Measuring Rear U-Joint Working Angle

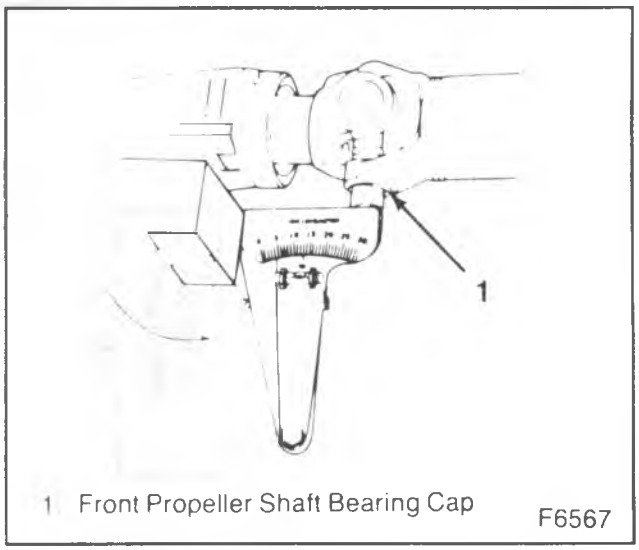

Figure 22—Measuring Front U-Joint Working Angle

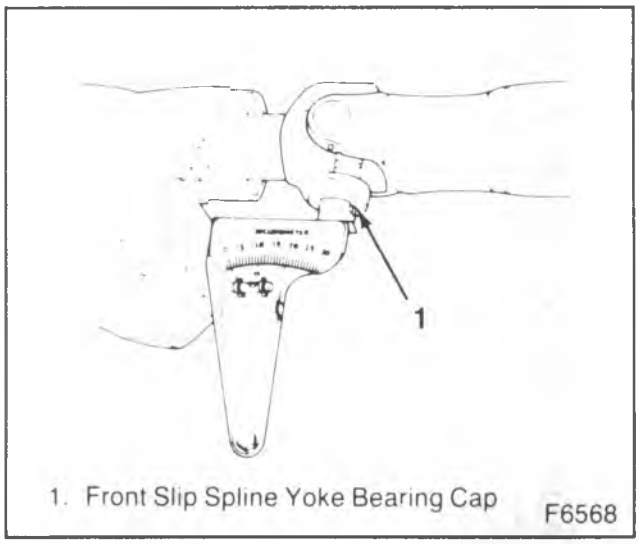

Figure 23—Measuring Front U-Joint Working Angle

NOISE AND VIBRATION INDEX CHART

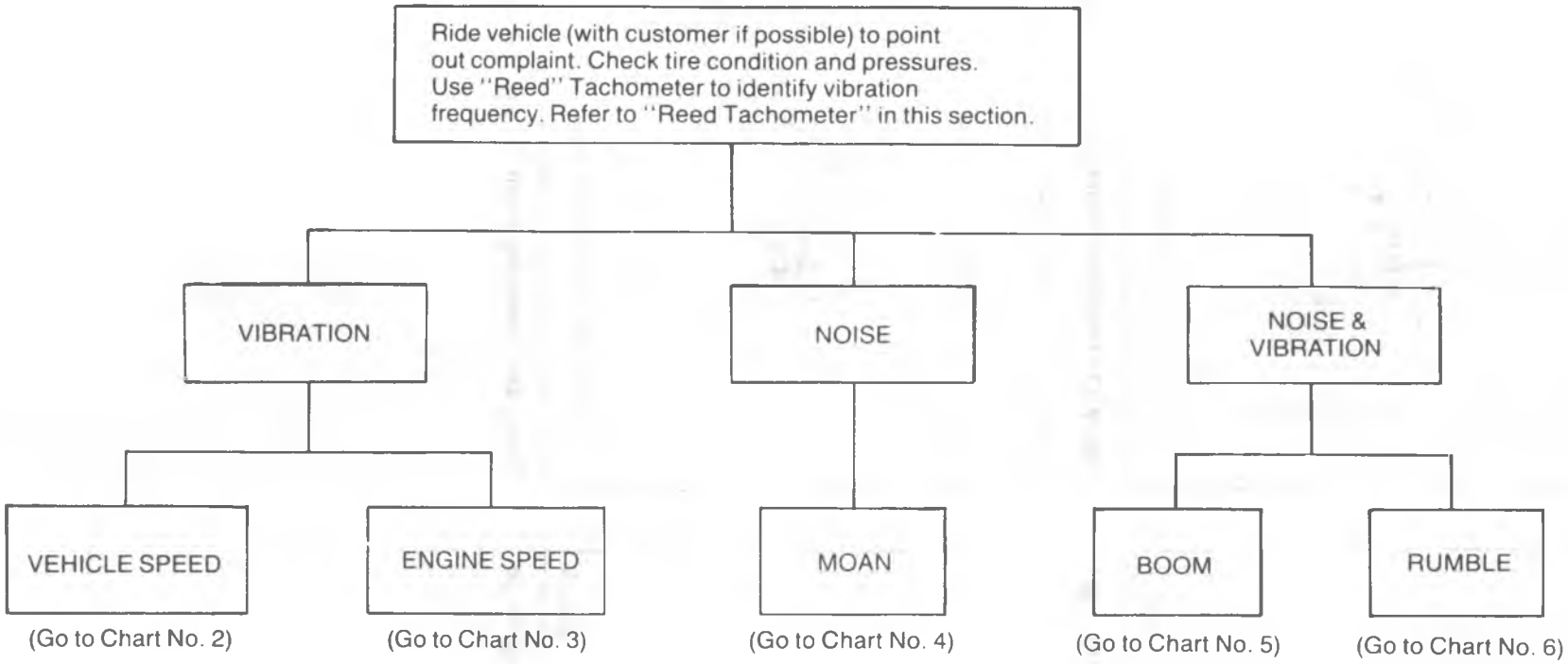

VEHICLE SPEED — Speedometer (vehicle speed) related.

ENGINE SPEED — Tachometer (engine speed) related.

MOAN — A low frequency noise which sounds like exhaust noise, is engine rpm and/or engine torque sensitive. Most customers will complain of noise — maybe a vibration or buzz in floor.

BOOM — A drum sound which occurs on impact with hole or seams in the road then dies out, could have a vibration along with the drumming sound.

RUMBLE* A steady drumming sound and vibration which is vehicle speed sensitive and continues as long as the vehicle speed is maintained, regardless of engine speed.

*NOTE: "Load sensitive rumble" — may only be noted with certain vehicle loads and speed conditions.

"Height (jounce) sensitive rumble" — Noise and vibration will vary in intensity and degree as vehicle height change takes place with road terrain change.

F6772

Figure 24—Vibration Diagnosis Chart #1

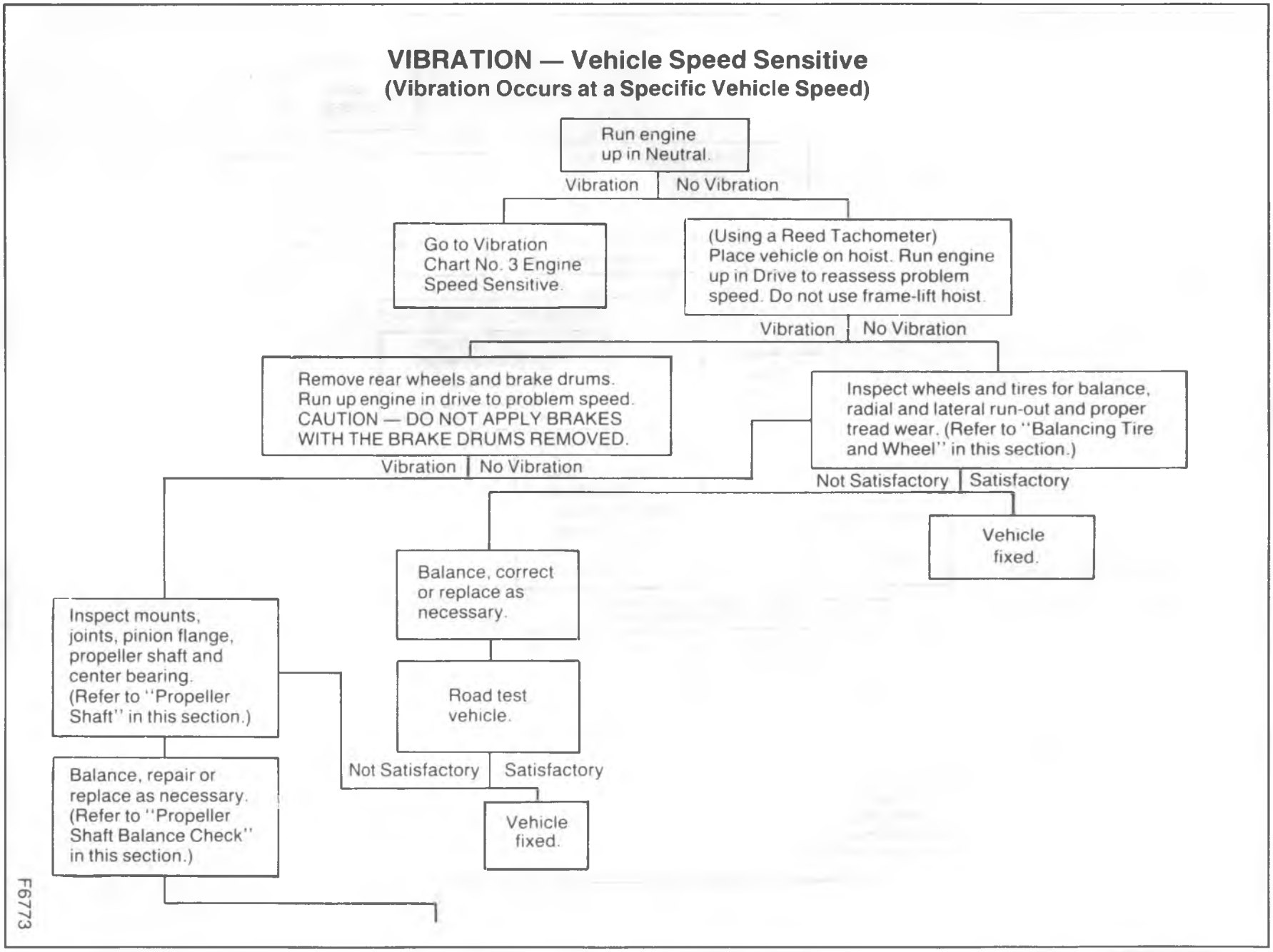

Figure 25—Vibration Diagnosis Chart #2

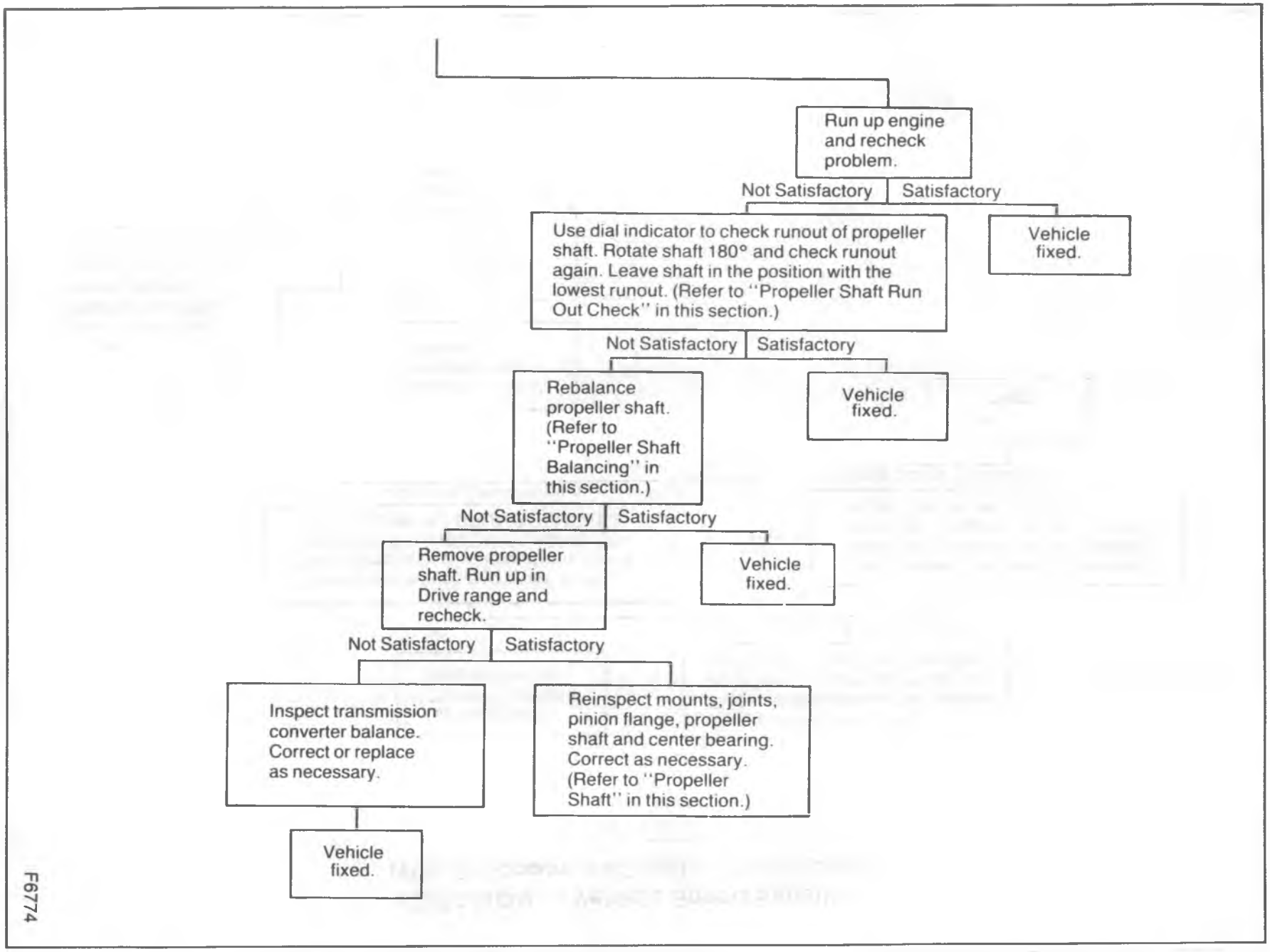

Figure 26—Vibration Diagnosis Chart #2 Continued

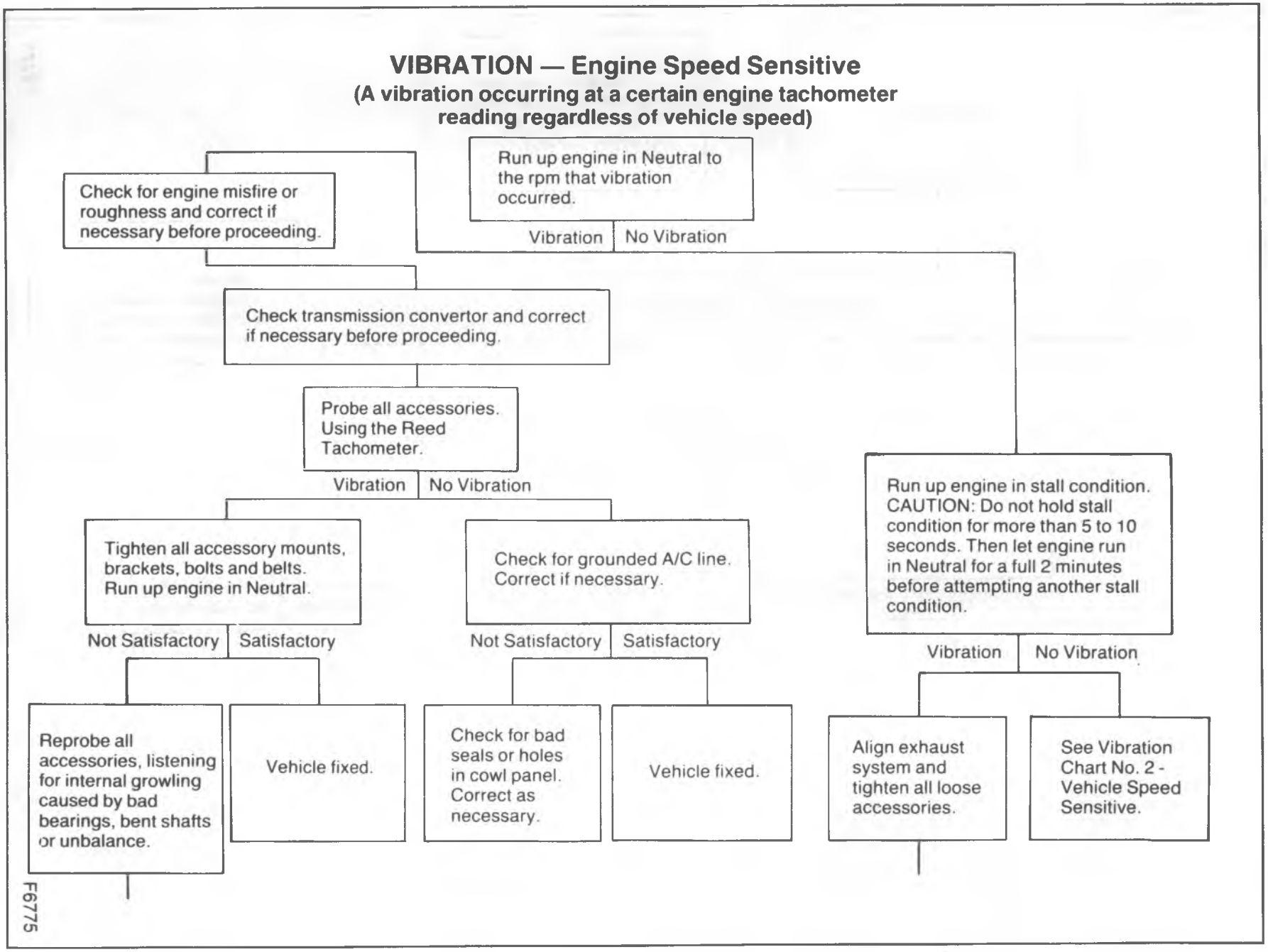

Figure 27—Vibration Diagnosis Chart #3

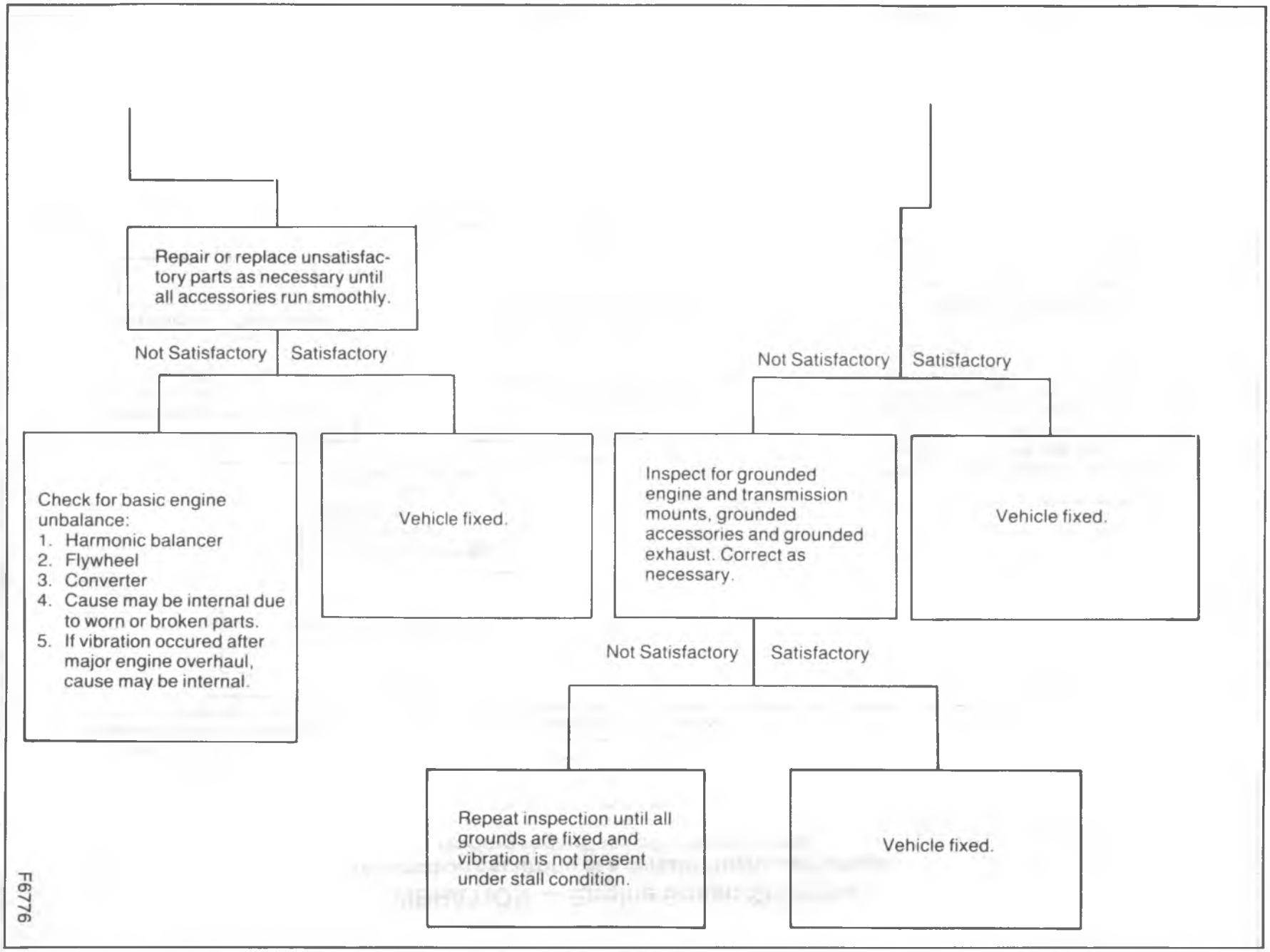

Figure 28—Vibration Diagnosis Chart #3 Continued

MOAN

(Low Frequency Noise Which Sounds Like Exhaust Noise, is Engine RPM and/or Engine Torque Sensitive — Sometimes Accompanied by Vibration or Buzz in Floor)

Visually and physically inspect and correct:

1. Loose air cleaner wing nut.
2. Loose accessory drive belts.
3. All accessory mounting brackets and bolts for tightness.
4. Grounded A/C lines.
5. Grounded engine and transmission mounts.
6. Grounded exhaust system.

F6777

Figure 29—Vibration Diagnosis Chart #4

BOOM — Noise and Vibration
(A drum sound which occurs on impact with holes or seams in the road surface)

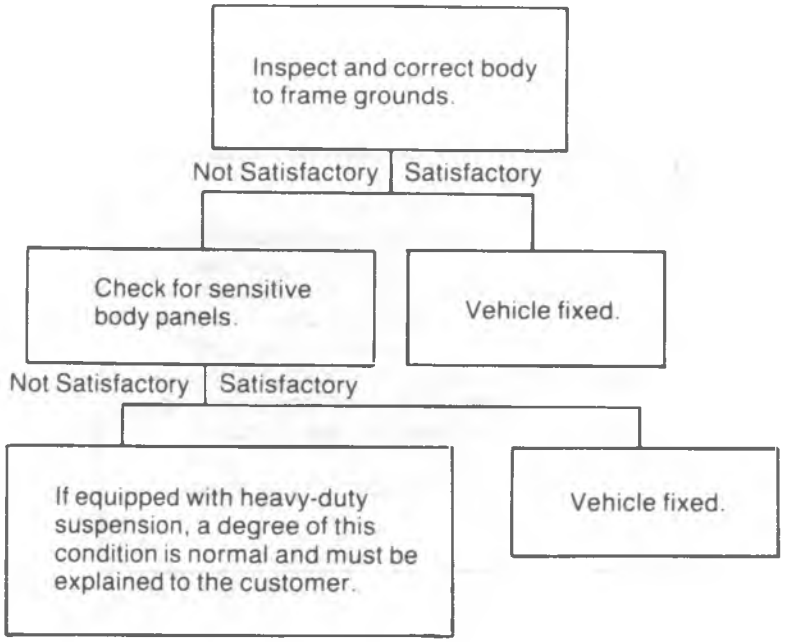

F6778

Figure 30—Vibration Diagnosis Chart #5

RUMBLE — Noise and Vibration

(A steady drumming sound which is vehicle speed sensitive and continues as long as vehicle speed is maintained)

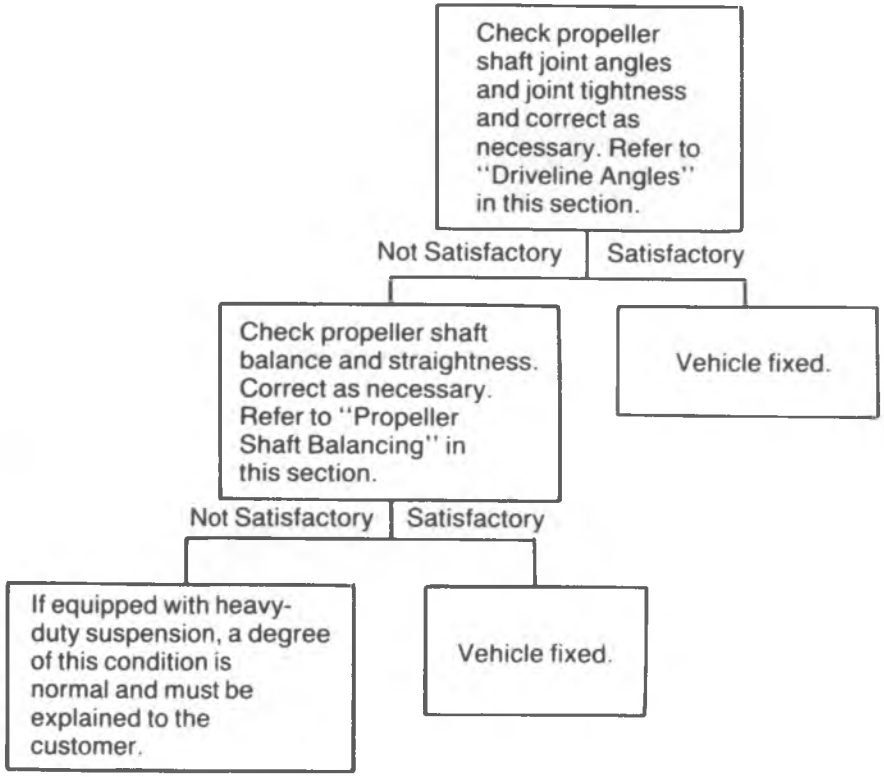

NOTE: Rumble may be vehicle load sensitive or vehicle height sensitive.
Refer to "Vibration Categories" in this section.

F6779

Figure 31—Vibration Diagnosis Chart #6

SECTION 1

HEATING AND AIR CONDITIONING

CONTENTS

SUBJECT	PAGE
Heating and Ventilation	1A-1
Air Conditioning	1B-1

SECTION 1A

HEATING AND VENTILATION

NOTICE: When fasteners are removed, always reinstall them at the same location from which they were removed. If a fastener needs to be replaced, use the correct part number fastener for that application. If the correct part number fastener is not available, a fastener of equal size and strength (or stronger) may be used. Fasteners that are not reused, and those requiring thread locking compound will be called out. The correct torque value must be used when installing fasteners that require it. If the above conditions are not followed, parts or system damage could result.

CONTENTS

SUBJECT	PAGE
R/V Series Heaters Description	1A- 2
Blower and Air Inlet Assembly	1A- 2
Heater Distributor Assembly	1A- 2
Diagnosis	1A- 3
Insufficient Heat Diagnosis	1A- 3
Heater Circuit Diagnosis	1A- 6
Diagnosis of the Heater System	1A- 7
R/V Series Heater On-Vehicle Service	1A- 8
Blower Motor Replacement	1A- 8
Heater Hose Routing	1A- 9
Heater Distributor Case and Core Replacement	1A- 9
Control Assembly Replacement	1A-11
Control Cable Replacement	1A-11
Cable Adjustment	1A-11
Blower Switch Replacement	1A-11
Resistor Replacement	1A-13
Vent Replacement	1A-13
R/V Series Auxiliary Heater Description	1A-14
R/V Series Auxiliary Heater On-Vehicle Service	1A-14
Blower Motor Replacement	1A-14
Heater Core Replacement	1A-14
Resistor Replacement	1A-14
Auxiliary Blower Switch Replacement	1A-14
Coolant-Control Valve Replacement	1A-16

R/V SERIES HEATER DESCRIPTION

Heating components are attached to the right side of the cowl. The blower and air inlet assembly and water hoses are located on the forward side of the cowl panel while the heater core and distributor duct are on the passenger side.

The heater system is an air-mix type system in which outside air is heated and then mixed in varying amounts with cooler outside air to attain the desired air temperature. The system consists of (1) a blower and air inlet assembly, (2) a heater distributor assembly and (3) a heater control assembly.

BLOWER AND AIR INLET ASSEMBLY

The blower and air inlet assembly draws outside air through the outside air inlet grille located forward of the windshield reveal molding and channels the air into the heater distributor assembly. The operation of the blower motor is controlled by the fan switch on the heater control. The motor is connected in series with the fan switch and the blower resistor assembly.

HEATER DISTRIBUTOR ASSEMBLY

The heater distributor assembly houses the heater core and the doors necessary to control mixing and channeling of the air. Since the unit has no water valve, water circulation keeps the core hot at all times. The portion of the air passing through the core receives maximum heat from the core. Air entering the distributor assembly is channeled as follows:

Air entering the distributor can be directed out the purge door opening on the right end of the distributor assembly by the temperature door. If the temperature door is closed, air is directed around the heater core; if it is open or partially open, air is then directed through the heater core and heated. Air is then directed into the passenger compartment through the heater (floor) outlets and/or the defroster (dash) outlets by the defroster door. The temperature of the outlet air is dependent on the ratio of heated to unheated air (controlled by the temperature door).

DIAGNOSIS

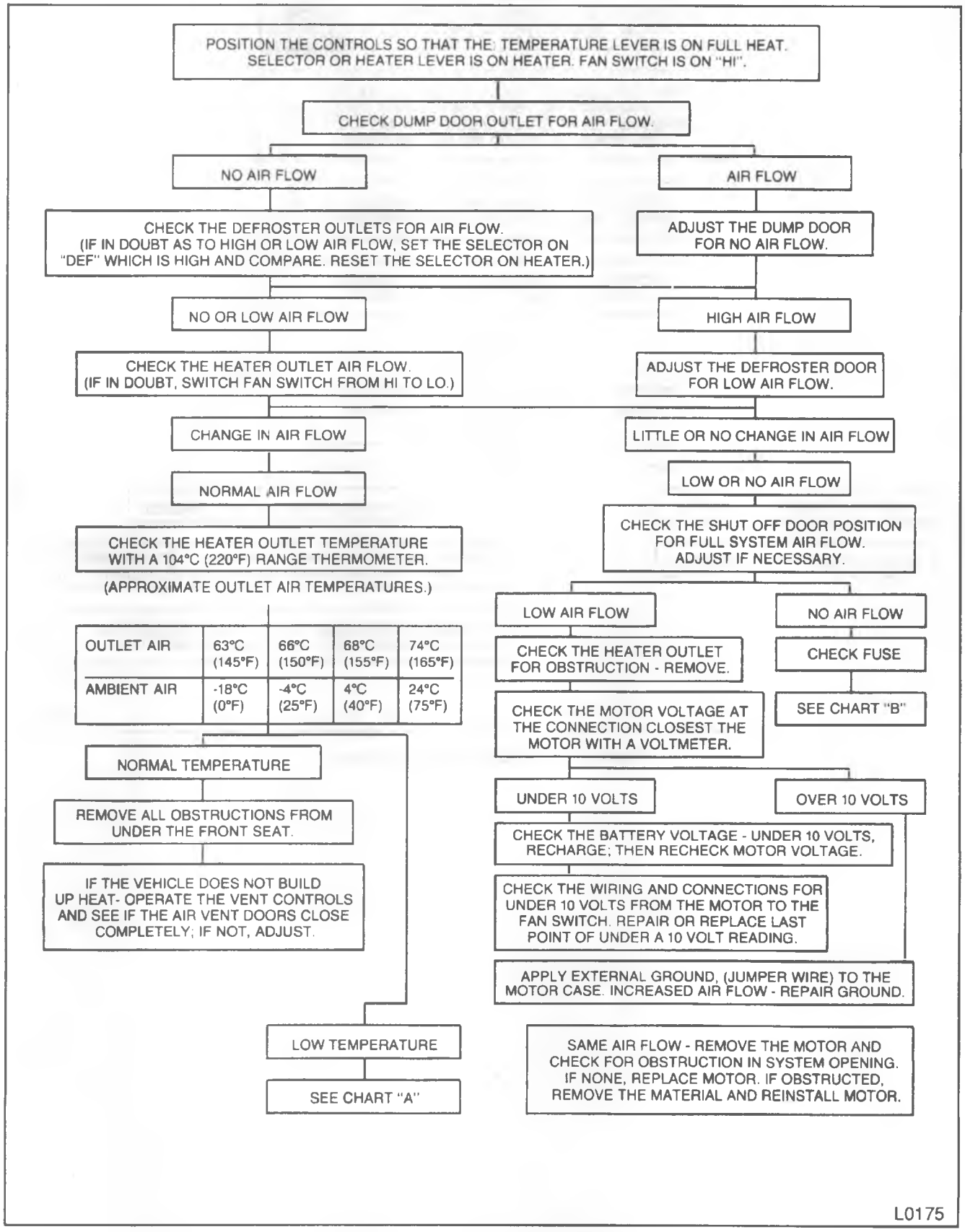

Figure 1—Insufficient Heat Diagnosis

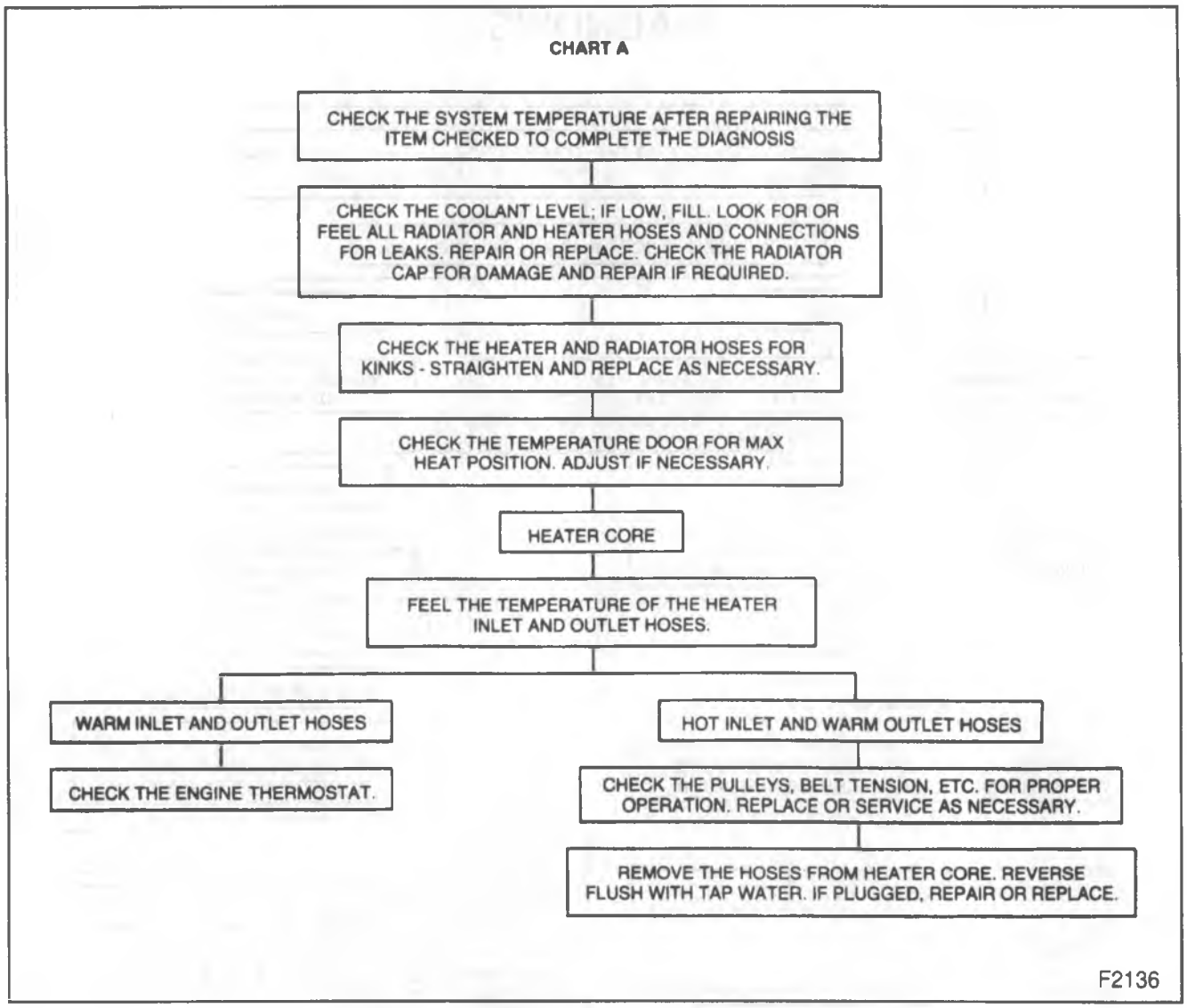

Figure 2—Insufficient Heat Diagnosis

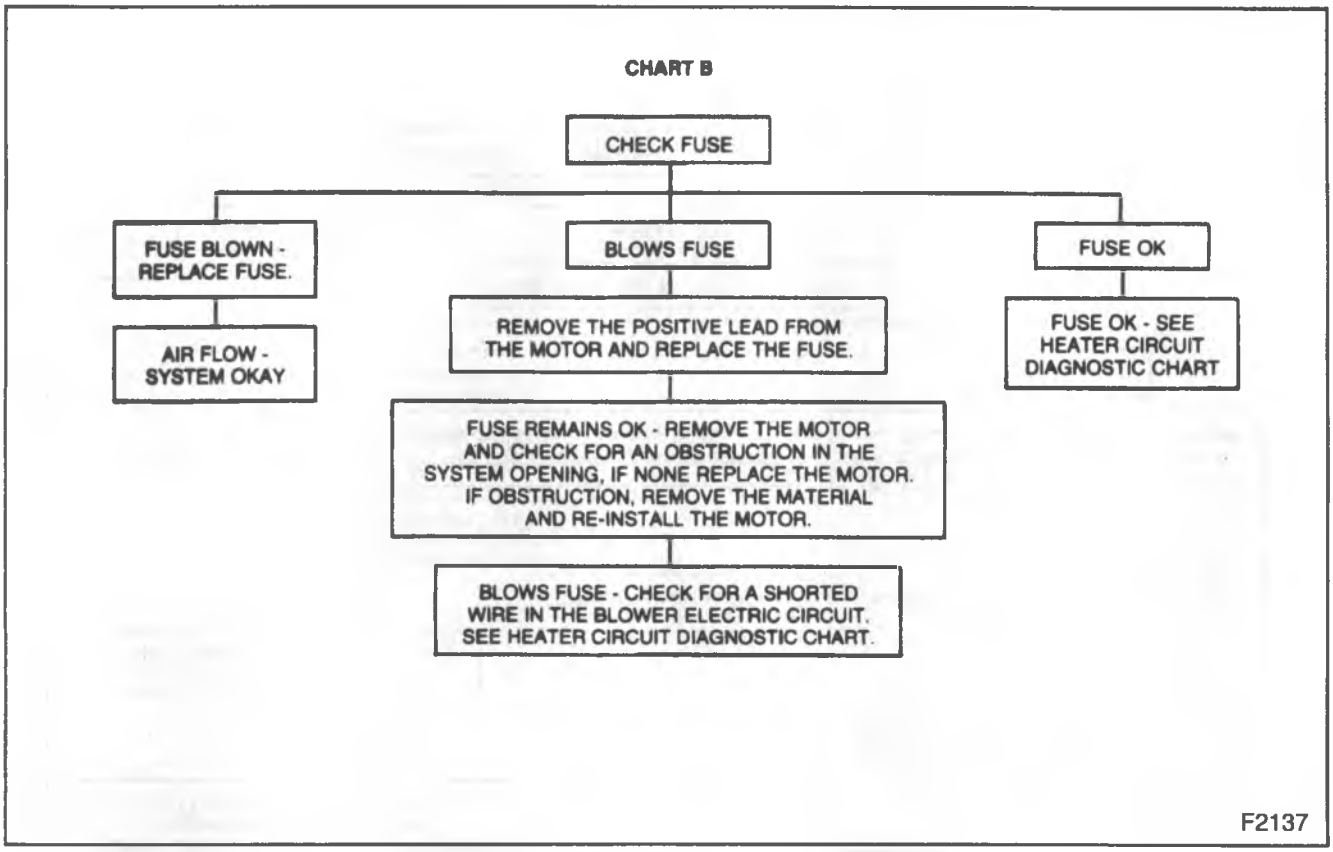

Figure 3—Insufficient Heat Diagnosis

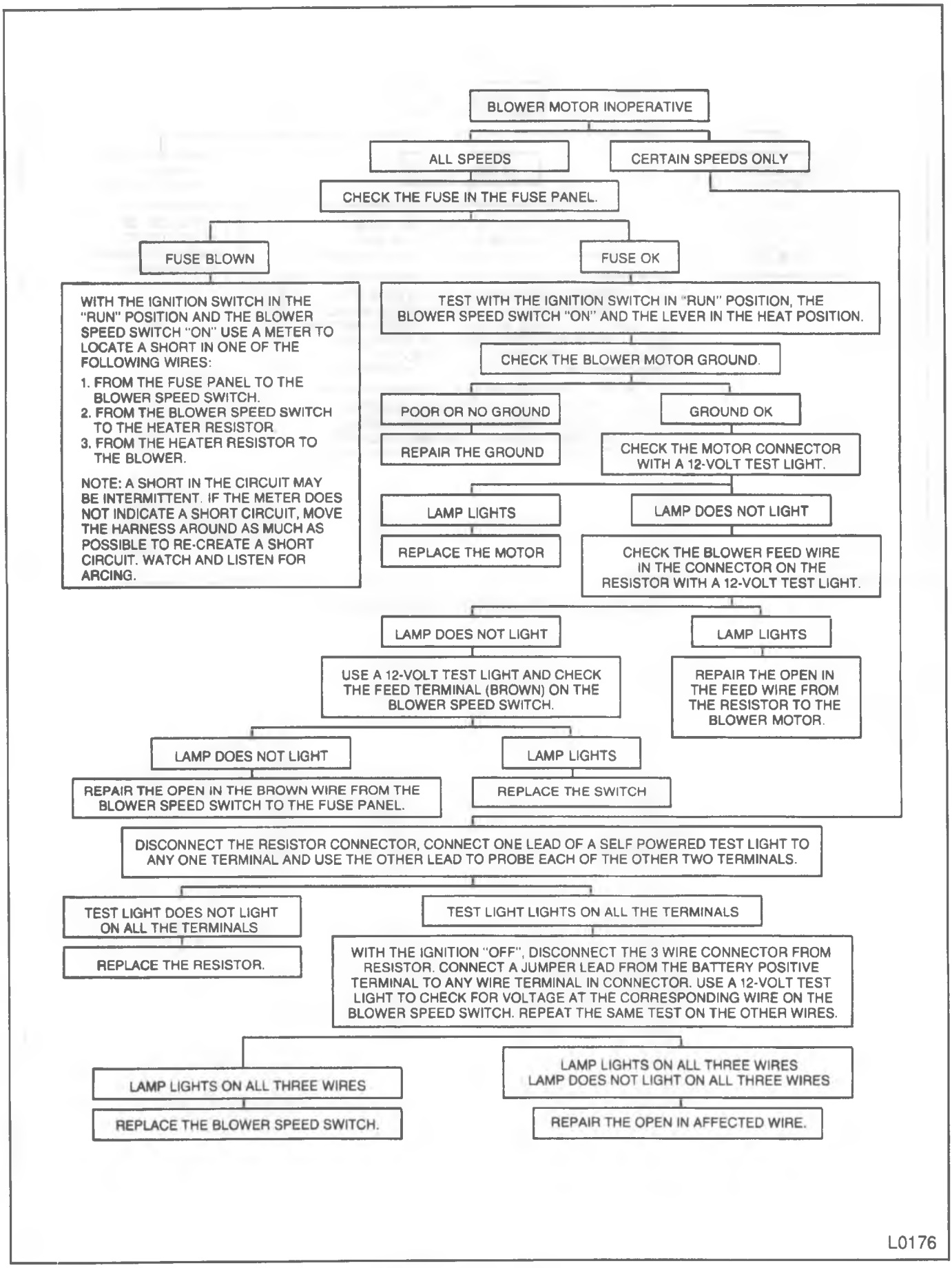

Figure 4—Heater Circuit Diagnosis

DIAGNOSIS OF THE HEATER SYSTEM

PROBLEM	POSSIBLE CAUSE	CORRECTION
Temperature Of Heater Air At The Outlets Is Too Low To Heat Up Passenger Compartment	Refer to "Insufficient Heat Diagnosis."	Refer to "Insufficient Heat Diagnosis."
Temperature Of Heater Air At The Outlets Is Adequate But The Vehicle Will Not Build Up Sufficient Heat	1. Floor side kick pad ventilators partially open. 2. Leaking grommets in dash. 3. Leaking welded seams along the rocker panel and windshield. 4. Leaks through the access holes and screw holes. 5. Leaking rubber molding around the door and windows. 6. Leaks between the sealing edge of blower and the air inlet assembly and cowl, and between the sealing edge of the heater distributor assembly and cowl.	1. Check and adjust. 2. Reseal or replace. 3. Clean and rewash. 4. Reseal or replace. 5. Reseal or replace. 6. Reseal or replace.
Inadequate Defrosting Action	1. Check that the DEFROST lever completely opens the defroster door in the DEF position. 2. Insure that the temperature and air doors open fully. 3. Look for obstructions in the defroster ducts. 4. Check for air leak in the ducting between the defroster outlet on heater assembly and the defroster duct under the instrument panel. 5. Check the position of the bottom of the nozzle to the heater locating tab. 6. Check the position of the defroster nozzle openings relative to instrument panel openings. Mounting tabs provide positive position if properly installed.	1. Adjust if necessary. 2. Adjust. 3. Remove any obstructions. 4. Seal area as necessary. 5. Adjust. 6. Adjust the defroster nozzle openings.
Inadequate Circulation Of Heated Air Through The Vehicle	1. Check the heater outlet for correct installation. 2. Inspect the floor carpet to insure that the carpet lies flat under the front seat and does not obstruct air flow. Also inspect around the outlet ducts to insure that the carpet is well fastened to floor to prevent cupping of the air flow.	1. Remove and install. 2. Correct as necessary.
Erratic Heater Operation	1. Check the coolant level. 2. Check for kinked heater hoses. 3. Check the operation of all bowden cables and doors. 4. Sediment in the heater lines and radiator causing the engine thermostat to stick open. 5. Partially plugged heater core.	1. Fill to the proper level. 2. Relieve kinks or replace hoses. 3. Adjust as necessary. 4. Flush the system and clean or replace thermostat as necessary. 5. Backflush core as necessary.

D0022

DIAGNOSIS OF THE HEATER SYSTEM (CONT.)

PROBLEM	POSSIBLE CAUSE	CORRECTION
Hard Operating Or Broken Controls	1. Check for loose cable tab screws or mis-adjusted cables. 2. Check for sticking heater system door(s).	1. Correct as required. 2. Lubricate as required using a silicone spray.

GMTB-4202-A

R/V SERIES HEATER ON-VEHICLE SERVICE

BLOWER MOTOR REPLACEMENT

Remove or Disconnect (Figures 5 and 6)

1. Battery ground cable.
2. Blower motor wiring harness at resistor (4) and motor connectors (5) (figure 5).
3. Five motor mounting screws.
4. Motor (13) and fan (15) assembly (figure 6).
   - Gently pry on the blower flange if the sealer acts like an adhesive.
5. Shaft nut (16).
6. Fan (15) from the motor (13).
7. Nut (210) from motor (13).

Install or Connect

1. Nut (210) to the motor (13).
2. Fan (15) to the motor (13).
   - Locate the open end of the wheel away from the blower motor.
3. Shaft nut (16).
4. New bead of permagum sealer to the case mounting flange.
5. Motor (13) and fan (15) assembly to the case (14).
6. Five mounting screws.
7. Blower motor wiring harness.
   - Resistor connector (4).
   - Motor connector (5).
8. Battery ground cable.
   - Check motor (13) for proper operation.

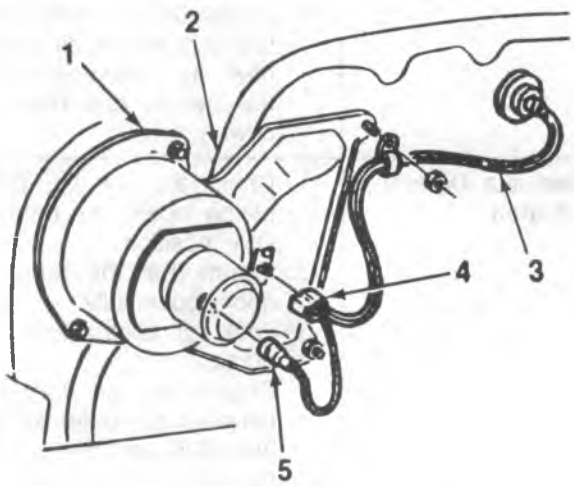

1. Heater/Blower Assembly
2. Dash
3. Blower Wiring
4. Resistor Connector
5. Motor Connector

F2976

Figure 5—Blower Motor Assembly Wiring R/V

HEATER HOSE ROUTING

Heater hoses are mounted from the thermostat housing or inlet manifold and water pump (radiator on some automatic transmission vehicles) to the core inlet and outlet pipes. Hoses are attached at each end with screw-type clamps. (Refer to figures 7, 8, and 9.)

REPLACEMENT

When replacing heater hoses, maintain a 13 mm (1/2-inch) minimum clearance between the hose clip and the upper control arm, a 38 mm (1 1/2-inch) minimum clearance between the hose and the propshaft, and a 32 mm (1 1/4-inch) minimum clearance between the auxiliary heater core lines and the exhaust pipe.

The heater core can be damaged near the tube attachment seams if force is applied to them. If the heater hoses do not come off, cut the hoses forward of the core tubes. Cut the hoses on core tubes to remove.

Important

- Draw hoses tight to prevent sagging or rubbing against other components. Route hoses through all clamps as installed originally.

HEATER DISTRIBUTOR CASE AND CORE REPLACEMENT

Remove or Disconnect (Figures 6 through 12)

1. Battery ground cable.
2. Heater hoses (40 and 41) at the core tubes (20) (figures 6, 7, 8, and 9).
   - Drain the engine coolant into a clean pan.
   - Plug the core tubes to prevent spillage.
3. Screws and nuts (8) from the studs (6) that project into the engine compartment (figures 6 and 10).
4. Instrument panel compartment.
5. Defroster (51) and temperature cables (52) (figure 11).
6. Floor outlet (37).
7. Screw (47) that holds the defroster duct to the heater distributor (figure 12).
8. Heater distributor from the dash panel.
   - Pull the assembly rearward to reach the wiring harness.
9. Wiring harness.
10. Heater case (24).
11. Core retaining clamps (18 and 19).
12. Core (20).

Install or Connect (Figures 6 through 12)

1. Core (20) to the case (24).
2. Core retaining clamps (18 and 19).
3. Heater case (24) to the vehicle.
4. Screws and nuts (8) to the studs (6).
5. Wiring harness.
6. Floor outlet (37).
7. Defroster (51) and temperature cables (52).
8. Instrument panel compartment.
9. Heater hoses (40 and 41) to the core tubes (20).
10. Battery ground cable.

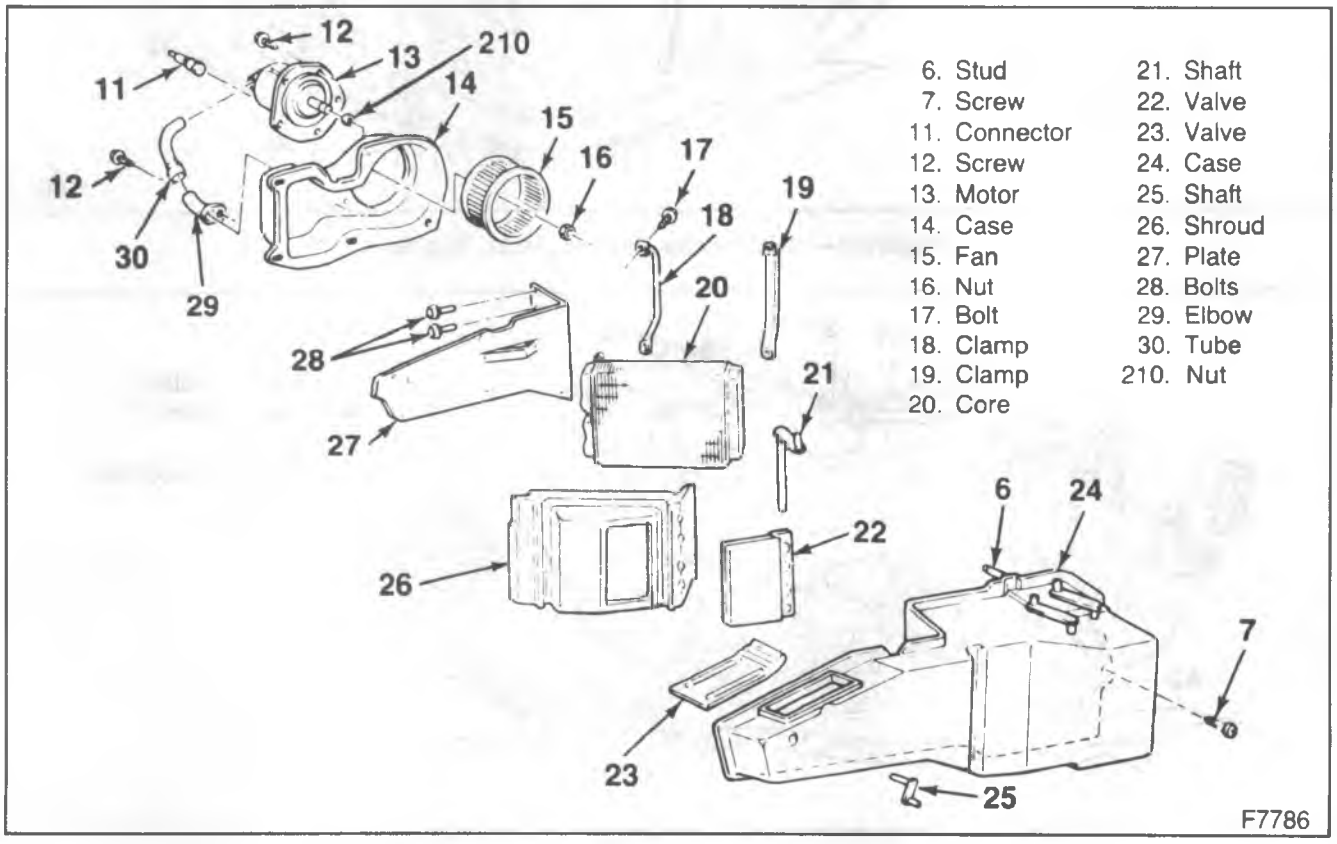

6. Stud	21. Shaft
7. Screw	22. Valve
11. Connector	23. Valve
12. Screw	24. Case
13. Motor	25. Shaft
14. Case	26. Shroud
15. Fan	27. Plate
16. Nut	28. Bolts
17. Bolt	29. Elbow
18. Clamp	30. Tube
19. Clamp	210. Nut
20. Core	

Figure 6—Blower Motor Assembly—Component View—R/V

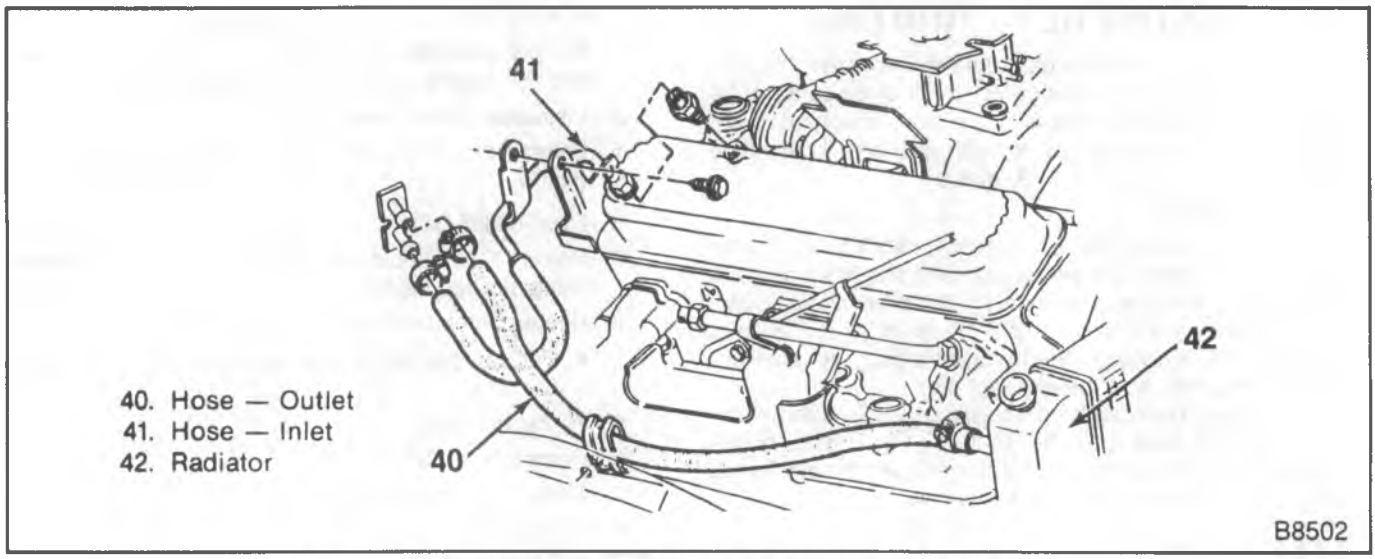

Figure 7—Heater Hose Routing—4.3L, 5.0L and 5.7L Engines

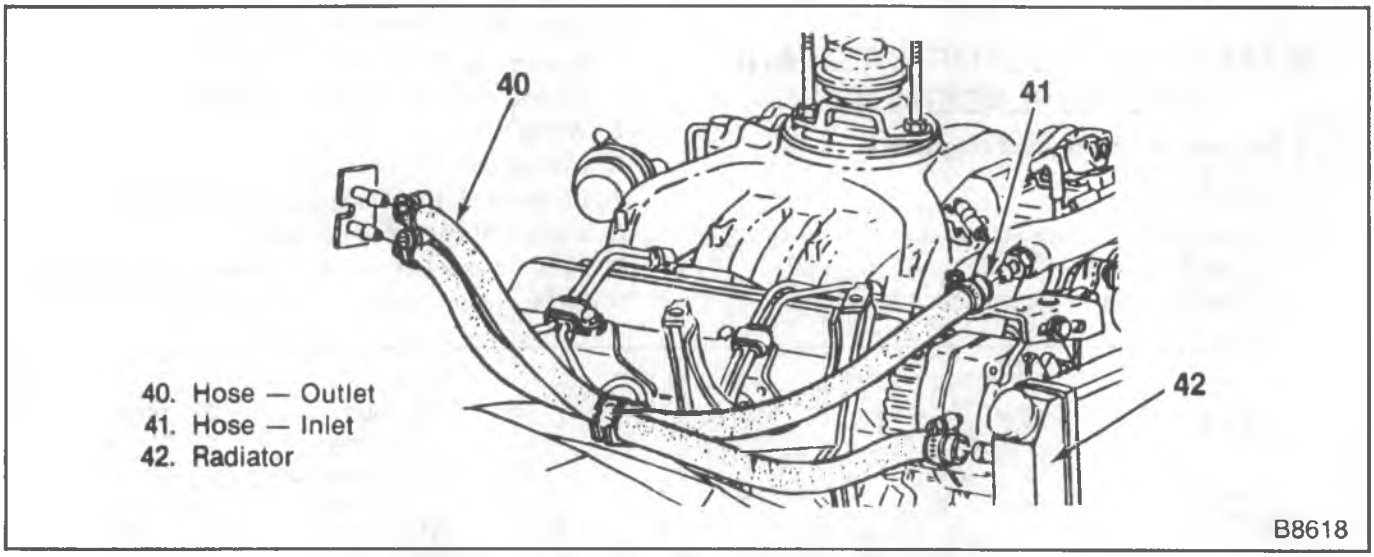

Figure 8—Heater Hose Routing—6.2L Engine

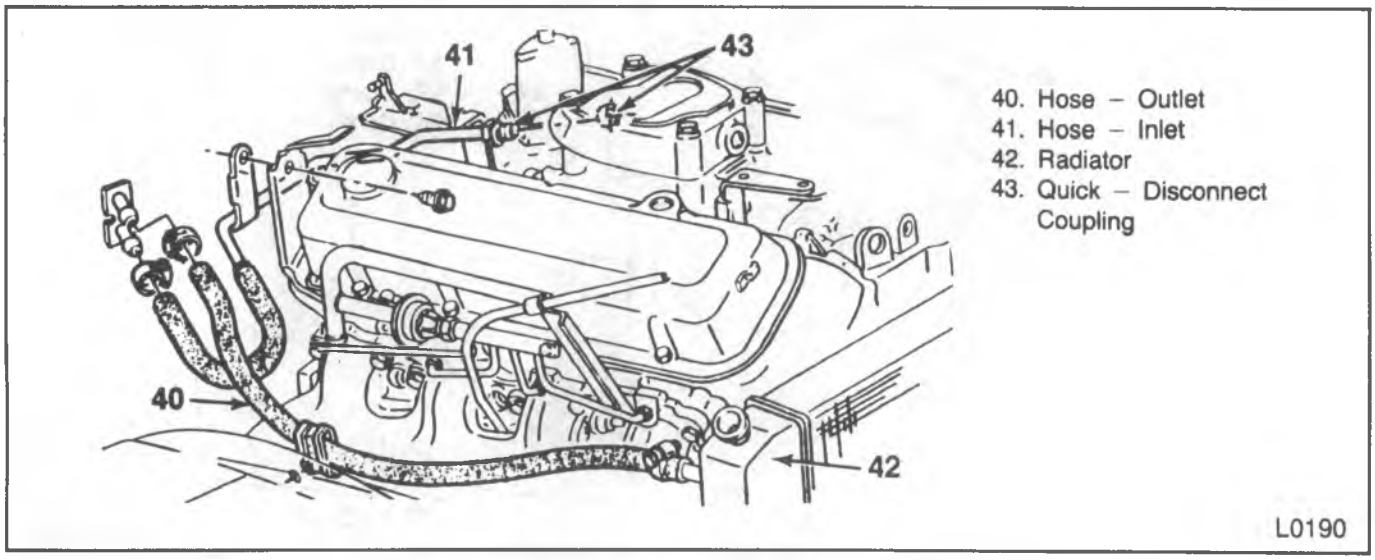

Figure 9—Heater Hose Routing—7.4L Engine

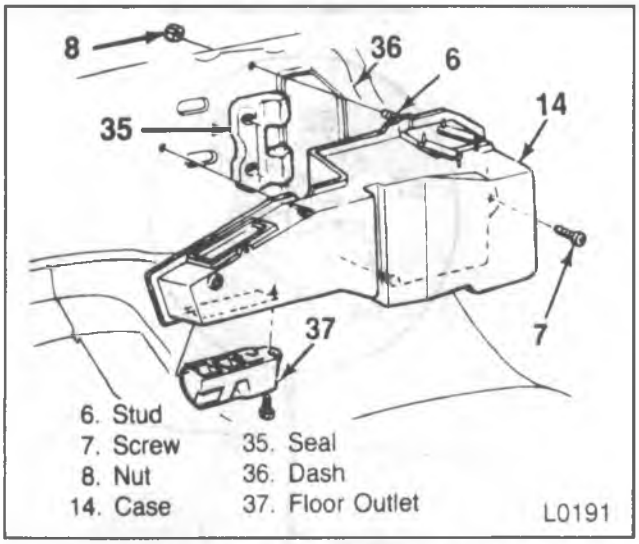

Figure 10—Heater Distributor Assembly

11. Coolant to the radiator.
    - Check for leaks.

CONTROL ASSEMBLY REPLACEMENT

Remove or Disconnect (Figure 11)

1. Battery ground cable.
2. Instrument panel bezel.
3. Defroster (51) and temperature cables (52).
4. Blower switch wiring harness connectors.
5. Assemble through the opening above the control.

Install or Connect (Figure 11)

- If a new unit is being installed, transfer the blower switch to the new unit.

1. Assembly through the opening above the control.
2. Blower switch wiring harness connectors.
3. Defroster (51) and temperature cables (52).
4. Instrument panel bezel.
5. Battery ground cable.

CONTROL CABLE REPLACEMENT

Remove or Disconnect (Figure 11)

1. Battery ground cable.
2. Instrument panel bezel.
3. Control assembly from the instrument panel.
4. Cable retainers (53) and tab attaching screws (54).
   - Pull the control out from the instrument panel for access.
5. Instrument panel compartment.
6. Cable retainers (53) and tab attaching screws (54) at the heater case.
7. Cable from the retaining clip (58).
8. Cable (51 or 52).

Install or Connect (Figure 11)

1. Cable (51 or 52).

Important

- Do not kink the cable. Route the cable as removed. Check the adjustment.

2. Cable to the retaining clip (58) at the heater case (24).
3. Cable retainers (53) and the tab screws (54) at the heater case.
4. Instrument panel compartment.
5. Cable (51 or 52) to the control assembly (50).
6. Cable retainers (53) and tab screws (54).
7. Control assembly (50) to the instrument panel.
8. Instrument panel bezel.
9. Battery ground cable.

CABLE ADJUSTMENT

Remove or Disconnect (Figure 11)

1. Instrument panel compartment.
2. Retainer (53).
3. Screw (54) from cable tab (57).

Important

- Do not pinch or kink the cable as heat control may be affected.

4. Cable (51 or 52) from the heater case (24).

Adjust

- Hold the cable with a pair of pliers and rotate the mounting tab (57) to lengthen or shorten the cable.

Install or Connect (Figure 11)

1. Cable (51 or 52) to the heater case (24).
2. Tab (57) to the clip (58).
3. Screw (54).
4. Instrument panel compartment.

BLOWER SWITCH REPLACEMENT

Remove or Disconnect (Figure 13)

1. Battery ground cable.
2. Instrument panel bezel.
3. Control assembly mounting screws (50).
4. Control assembly (50).
   - Pull the control out from the instrument panel.
5. Blower switch wiring harness.
6. Switch (56).

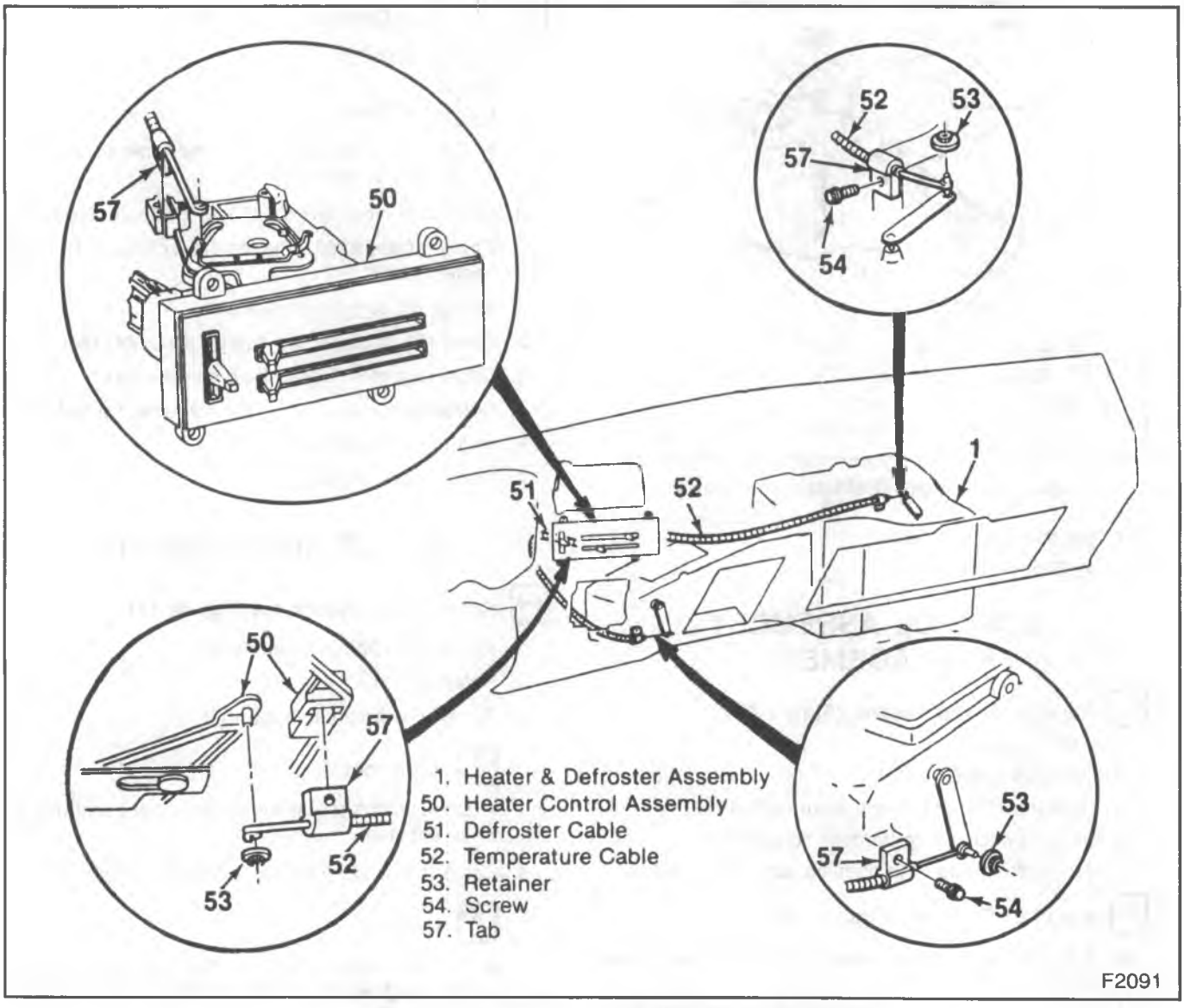

Figure 11—Control Assembly and Cables

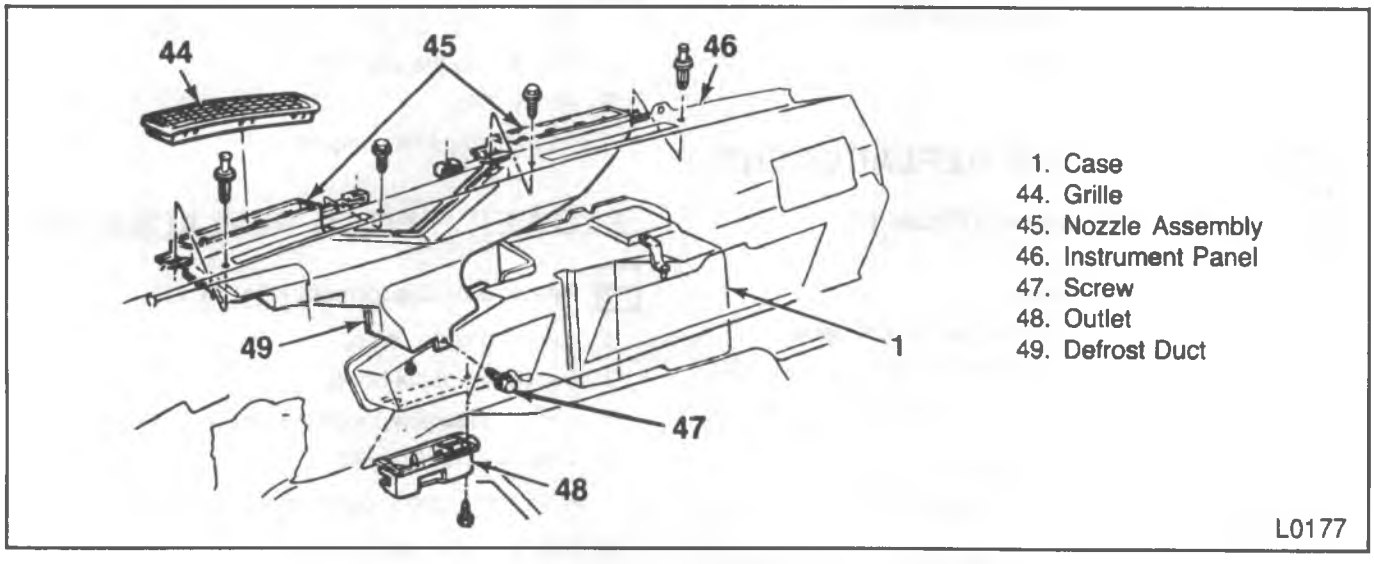

Figure 12—Floor and Defroster Vents

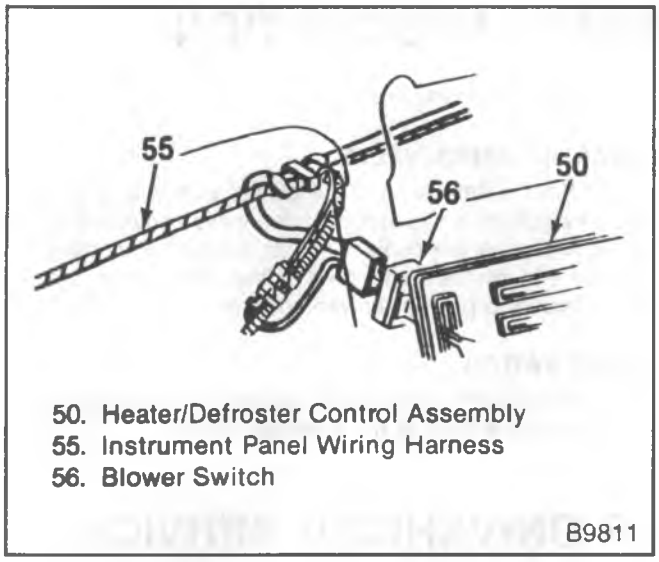

Figure 13—Blower Switch

Install or Connect (Figure 13)

1. Switch (56) to the control assembly (50).
2. Wiring harness to the blower switch (56).
3. Control assembly (50) to the instrument panel.
4. Control assembly mounting screws (50).
5. Instrument panel bezel.
6. Battery ground cable.

RESISTOR REPLACEMENT

Remove or Disconnect (Figures 5 and 14)

1. Battery ground cable.
2. Connector (4).
3. Screws.
4. Resistor (60).

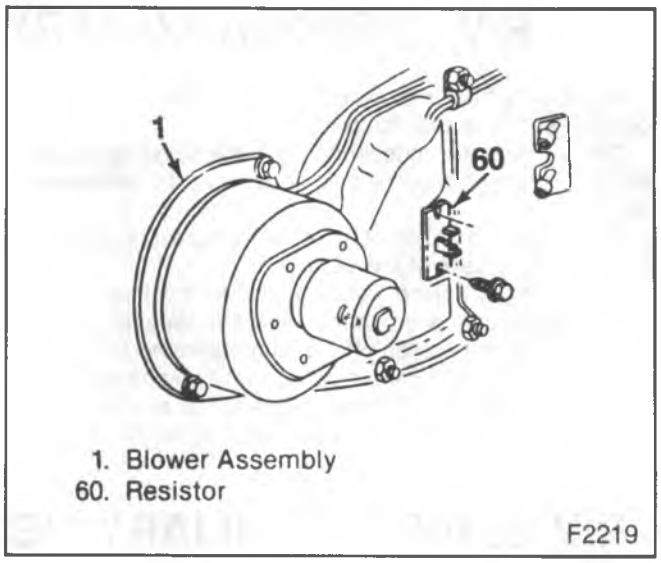

Figure 14—Blower Motor Resistor

Install or Connect (Figures 5 and 14)

1. Resistor (60).
2. Screws.
3. Connector (4).
4. Battery ground cable.

VENT REPLACEMENT

Right and left vents are installed in the kick panels under the instrument panel. Replace the vents by removing the attaching screws (figure 15).

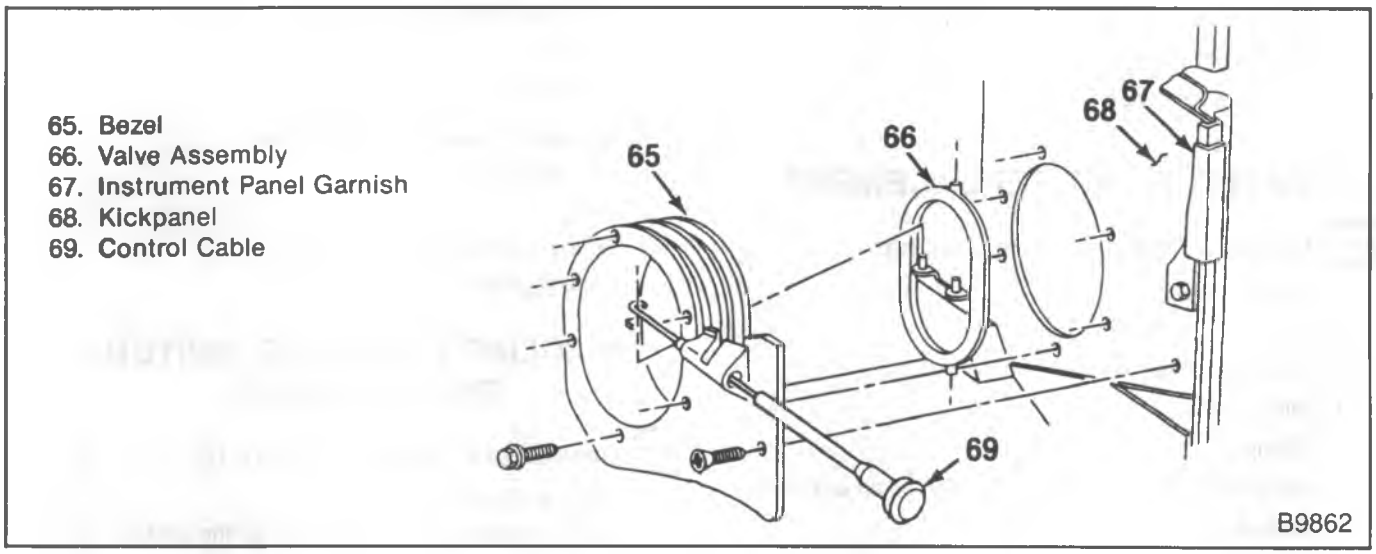

Figure 15—Vent Assembly

R/V SERIES AUXILIARY HEATER DESCRIPTION

An auxiliary heater provides additional heating capacity for the rear of the Suburban model.

This unit operates independently of the standard heater, and is regulated through it own controls at the instrument panel.

This system consists of a separate core and fan unit mounted in the rear of the vehicle.

Heater hoses extend from the unit to the front of the vehicle where they are connected to the standard heater hoses with "tees." An "on-off" vacuum operated valve is installed in the heater core inlet line in the engine compartment. This valve cuts off coolant flow to the auxiliary core during warm weather and eliminates radiant heat (figure 16).

Two control methods are used:

COOLANT-CONTROL VALVE

When heat is desired, and the blower switch is in any position except off, a vacuum operated valve controlled by the switch, opens the coolant line to permit hot coolant circulation through the heater core. In the OFF position the valve is closed to prevent unwanted heat.

BLOWER SWITCH

The three-speed blower switch is located in the instrument panel to the right of the steering column.

R/V SERIES AUXILIARY HEATER ON-VEHICLE SERVICE

BLOWER MOTOR REPLACEMENT

Remove or Disconnect (Figure 16)

1. Battery ground cable.
2. Blower motor wiring harness (91).
3. Clamp (86).
4. Screws (84) and washer (83).
5. Motor (85).
6. Fan blade retaining nut (16) and fan blade (80) from motor (85) (if necessary).

Install or Connect (Figure 16)

1. Fan blade (80) and retaining nut (16) to motor (85) (if removed).
2. Motor (85).
3. Screws (84) and washers (83).
4. Clamp (86).
5. Blower motor wiring harness (91).
6. Battery ground cable.
   - Check for proper operation.

HEATER CORE REPLACEMENT

Remove or Disconnect (Figure 16)

1. Battery ground cable.
2. Coolant from the radiator.
3. Hoses (93 and 94) from the core (77).
4. Wiring harness (91).
5. Clamp (86).
6. Motor (85), support (81) and fan (80) as an assembly.
7. Screws (79).
8. Upper case (75).
9. Seal (76).
10. Core (77).

Install or Connect (Figure 16)

1. Core (77) to lower case (78).
2. Seal (76).
3. Upper case (75).
4. Screws (79).
5. Motor (85), support (81) and fan (80).
6. Clamp (86).
7. Wiring harness (91).
8. Hoses (93 and 94) to the core (77).
9. Coolant to the radiator.
10. Battery ground cable.
    - Check for leaks.

RESISTOR REPLACEMENT

Remove or Disconnect (Figure 16)

1. Battery ground cable.
2. Wiring harness connector (91).
3. Screws.
4. Resistor (88).

Install or Connect (Figure 16)

1. Resistor (88).
2. Screws.
3. Wiring harness connector (91).
4. Battery ground cable.

AUXILIARY BLOWER SWITCH REPLACEMENT

Remove or Disconnect (Figure 16)

1. Battery ground cable.
2. Wiring harness connector (107) at the switch (104).
3. Screws (102).
4. Bezel (103).
5. Switch (104).

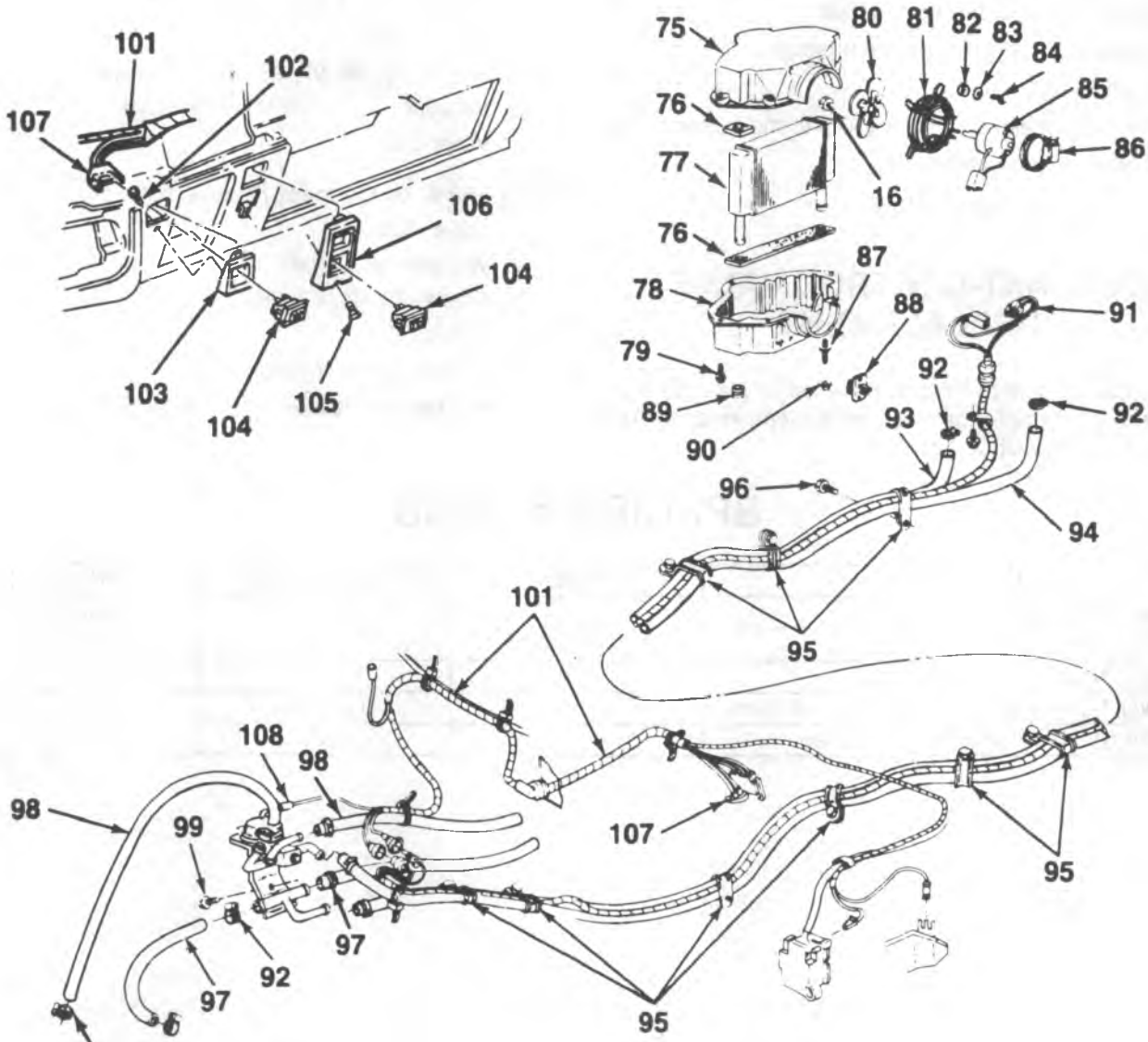

16. Nut
75. Upper Case
76. Seal
77. Core
78. Lower Case
79. Screw
80. Fan
81. Support
82. Grommet
83. Washer
84. Screw
85. Motor
86. Clamp
87. Stud
88. Resistor
89. Seal
90. Nut
91. Harness Connectors
92. Clamp
93. Auxiliary Heater Inlet Rear Hose
94. Auxiliary Heater Outlet Rear
95. Clip
96. Screw
97. Water Heater Outlet Hose
98. Water Heater Inlet Hose
99. Screw
100. Valve
101. Harness
102. Screw
103. Auxiliary Heater Switch (Single Function) Bezel
104. Auxiliary Heater Control Switch
105. Screw
106. Auxiliary Heater/Rear Air Conditioning Control Switch (Dual Function)
107. Connector
108. Vacuum Line

F7794

Figure 16—Auxiliary Heater—Suburban

Install or Connect (Figure 16)

1. Switch (104) to the bezel (103).
2. Bezel (103) to the instrument panel.
3. Screw (102).
4. Wiring harness connector (107) to the switch (104).
5. Battery ground cable.
   - Check for proper operation.

COOLANT-CONTROL VALVE REPLACEMENT

The coolant-control valve is mounted to the right front fender. To diagnose the vacuum system, refer to AIR CONDITIONING (SEC. 1B).

Remove or Disconnect (Figure 16)

1. Coolant from the radiator.
2. Clamps (92).
3. Hoses (93, 94, 97, 98) from the valve.
4. Vacuum hose (108) from the valve.
5. Valve (100).

Install or Connect (Figure 16)

1. Valve (100).
2. Vacuum hose (108).
3. Hoses (93, 94, 97, 98).
4. Clamps (92).
5. Coolant to the radiator.
   - Check for leaks.

SPECIFICATIONS

Component	Volts	Amps. (Cold)	RPM (Cold)
Blower Motor (Main Heater) R/V Series	13.5	6.25 Max.	2550 Min. 2950 Max.
Fuses (Main Heater)—All Series	—	25	—
Blower Motor (Auxiliary Heater)—All Series	13.5	9.6 Max.	2700 Min.
Fuses (Auxiliary Heater)—All Series	—	25	—

TB-3074-2A

SECTION 1B
AIR CONDITIONING

CONTENTS

SUBJECT	PAGE
Description	1B- 2
CCOT A/C System	1B- 2
Rear Interior Roof Mounted Systems (Suburban)	1B- 2
System Components	1B- 2
Periodic Maintenance and Servicing	1B- 4
System Operation – R/V	1B- 4
Functional Test – R/V	1B- 4
Refrigerant-12 Description	1B- 6
System Components, Temperature and Pressure Relationships	1B- 6
Refrigerant and Oil Capacity	1B- 6
Handling Refrigerant-12	1B- 6
Handling Refrigerant Lines and Fittings	1B- 7
Maintaining Chemical Stability	1B- 8
Diagnosis of Refrigerant System	1B- 9
Insufficient Cooling "Quick-Check" Procedure	1B- 9
System Performance Test	1B- 9
Testing the Refrigerant System	1B-10
Leak Testing the Refrigerant System	1B-10
Pressure Sensing Switch	1B-10
Compressor Cut-Out Switches	1B-10
Diagnosis of the Refrigerant Recovery and Recycling System	1B-17
Refrigerant Recovery and Recycling, Adding Oil, Evacuating and Charging Procedures	1B-17
Refrigerant Recovery and Recycling	1B-17
Station (ACR) Setup and Maintenance	1B-18
Diagnosis of Electrical/Vacuum System	1B-22
Operational Test	1B-22
Vacuum System	1B-26
Evacuating and Charging Procedures	1B-27
Refrigerant Oil Distribution	1B-27
Evacuating and Charging	1B-27
Gage Calibration	1B-27
Vacuum System Check	1B-27
Charging Station Method	1B-28
Refrigerant Drum Method	1B-29
Charging the System	1B-29
Accumulator Assembly	1B-29
Diagnosis of Specific Components	1B-30
Compressor	1B-30
Condenser	1B-30
Expansion Valve	1B-30
Evaporator	1B-30
Refrigerant Line Restrictions	1B-30
On-Vehicle Service	1B-30
Filter Installation	1B-30
Compressor Replacement (R/V)	1B-31
A/C System – R/V Series	1B-34
Condenser Replacement	1B-34
Accumulator Replacement	1B-35
Blower Assembly Replacement	1B-35
Blower Assembly Replacement (Diesel Engine)	1B-36
Evaporator Core Replacement (Except Diesel Engines)	1B-36
Evaporator Core Replacement (Diesel Engine)	1B-37
Orifice (Expansion Tube) Replacement	1B-37
Defroster Duct and Heater Core Replacement	1B-37
Actuator – Plenum Side Vent Replacement	1B-38
Plenum Valve Replacement	1B-40

CONTENTS (CONT.)

SUBJECT	PAGE
Control Assembly Replacement	1B-41
Temperature Door Cable Adjustment	1B-41
Blower Switch Replacement	1B-41
Vacuum Tank Replacement	1B-42
Blower Motor Resistor Replacement	1B-43
Blower Motor Relay Replacement	1B-43
Fuse Replacement	1B-43
Vacuum Line Replacement – Engine Compartment	1B-43
Vacuum Line Replacement – Dash	1B-43
Refrigerant-12 Hose Replacement	1B-44
Rear Interior Roof Mounted System – Suburban	1B-46
Rear Duct Replacement	1B-46
Blower Motor Resistor Replacement	1B-46
Blower Motor Assembly Replacement	1B-46
Expansion Valve Replacement	1B-47
Evaporator Core Replacement	1B-50
Blower Motor Switch Replacement	1B-51
Fuse Replacement	1B-51
A/C System – P Models	1B-52
Minor Compressor Repairs	1B-53
HR-6 Compressor	1B-55
Clutch Plate and Hub Assembly Replacement	1B-55
Pulley and Bearing Assembly Replacement	1B-56
Clutch Coil and Housing Assembly Replacement	1B-60
R-4 Compressor	1B-60
Clutch Drive Hub Replacement	1B-60
Clutch Rotor and/or Bearing Replacement – Multi-Rib Type	1B-61
Clutch Coil and/or Pulley Rim Replacement – V-Belt Drive	1B-62
Clutch Coil and/or Pulley Rim Replacement – Multi-Rib Type	1B-63
Specifications	1B-64
Special Tools	1B-65

DESCRIPTION

CCOT A/C SYSTEM

The CCOT (Cycling Clutch Orifice Tube) A/C system performs heating and cooling. Air enters the vehicle and passes through the cooling unit (evaporator) and through (or around) the heating unit. The system is called a "reheat" system. The evaporator cools the air passing through the core when the air conditioning system is in the cooling mode.

On R/V, a pressure sensing switch, located near the top of the accumulator, controls compressor operation. The switch responds to pressure changes to turn the compressor On or Off.

System Operation:

Outside air or recirculated air enters the system and is forced through the system by the blower. As the air passes through the evaporator core, it receives maximum cooling if the air conditioning controls are positioned for cooling.

From the evaporator, the air enters the heater and air conditioner selector duct assembly where, by means of diverter doors, it passes through or bypasses the heater core in proportions necessary to provide the desired outlet temperature. The air enters the vehicle through either floor distributor duct or the instrument panel outlets.

During cooling, the air is cooled by the evaporator to below comfort level when warmed by the heater to the desired temperature. During "heating only" the evaporator does not operate, and ambient air is warmed to the desired level in the same manner.

REAR INTERIOR ROOF MOUNTED SYSTEMS (SUBURBAN)

These systems operate with the front system – they do not operate independently. However, control of the rear blower motor speed is possible when the front system is OFF. Rear air circulation without the refrigerant function is possible by operating the rear blower control switch.

These self-contained units operate on inside (recirculated) air. Air enters the unit and passes through the evaporator core into the passenger compartment through the air distributor duct. A portion of the front system refrigerant is diverted to the rear unit. A three-speed blower switch controls the rear interior roof mounted system.

SYSTEM COMPONENTS

THERMOSTATIC EXPANSION VALVE

Suburban rear interior roof mounted and motor home chassis systems use a thermostatic expansion valve (figure 1).

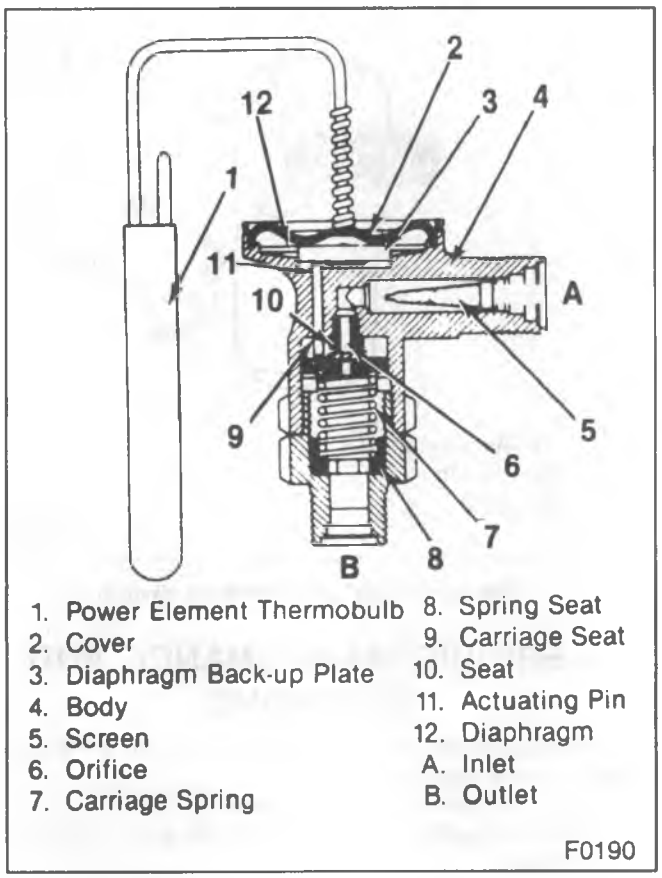

Figure 1 – Thermostatic Expansion Valve

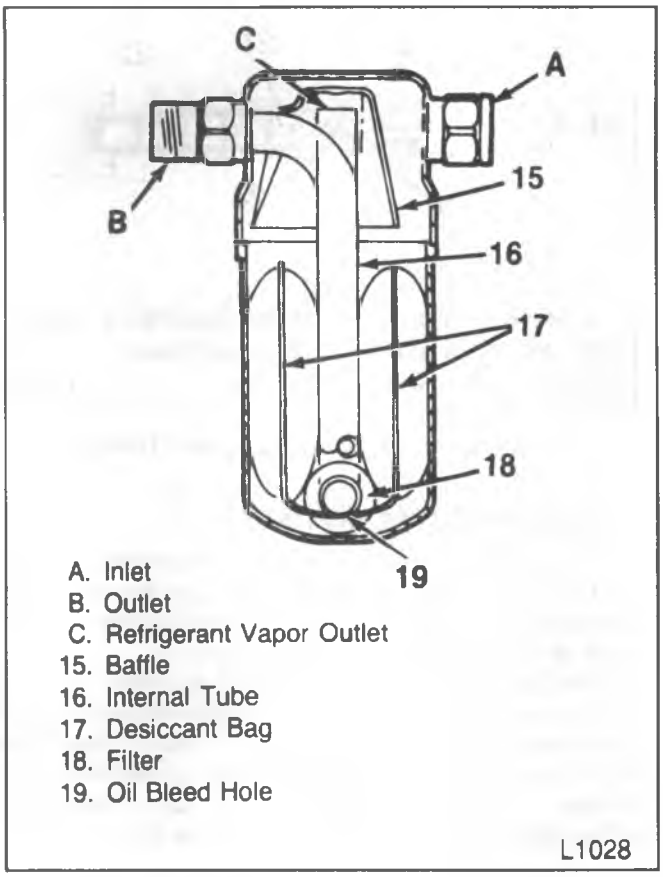

Figure 2 – Accumulator

The valve consists of the power element, body, actuating pins, seat and orifice. At the high pressure liquid inlet, a fine mesh screen prevents dirt, fillings or other foreign matter from entering the valve orifice.

When the valve is connected in the system, high pressure liquid refrigerant enters the valve through the screen from the condenser and passes on to the seat and orifice where it changes into a low pressure liquid.

The low pressure liquid leaves the valve and flows into the evaporator core where it absorbs heat from the evaporator core and changes to a low pressure vapor and leaves the evaporator core. The power element bulb is clamped to the low pressure vapor line just beyond the outlet of the evaporator.

ACCUMULATOR

The accumulator is located at the evaporator outlet. It separates liquid retained from vapor, retains the liquid and releases the vapor to the compressor (figure 2).

Flow from the accumulator to the compressor consists of vapor, entrained liquid and liquid flow through the oil bleed hole.

A bag of desiccant (dehydrating agent), located in the accumulator, collects moisture.

The accumulator with the CCOT system has no sight glass and is not serviceable.

ORIFICE (EXPANSION TUBE)

The orifice tube is a plastic assembly containing a fixed diameter tube with a mesh filter screen at either end. It is located in the evaporator inlet line. The fixed diameter tube creates a restriction to the high pressure liquid refrigerant, metering the flow to the evaporator as a low pressure liquid (figure 3).

When system diagnostics indicates a restricted orifice tube, it may not be necessary to replace it. Metal chips, flakes or slivers found on the screen may be removed with shop air and the orifice may be reused provided:

- Plastic frame is not broken.
- Brass orifice tube is not damaged or plugged.
- Screen material is not torn.
- Screen is not plugged with fine gritty material.

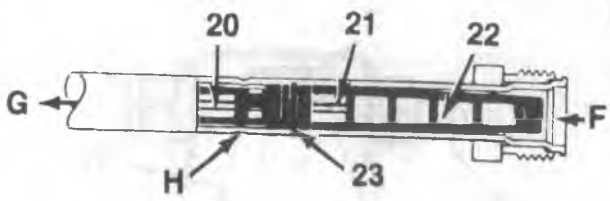

F. Inlet
G. Outlet (To Evaporator)
H. Dent On Tube (Retains the Expansion Tube)
20. Outlet Screen
21. Expansion Tube
22. Inlet Screen
23. Seal
B7208

Figure 3 – Orifice (Expansion Tube)

CYCLING PRESSURE SWITCH

This switch controls evaporator temperature. It cycles the compressor clutch off when the evaporator temperature gets too low. It cycles the compressor back on after evaporator temperature has increased (figure 4).

The cycling pressure switch provides inherent compressor protection so a separate low pressure switch is not necessary. The switch also acts as an ambient switch since at ambient freezing temperatures it will not allow the compressor to engage. Adjusting the set-screw one-half turn left or right will raise or lower the settings 20.7 kPa (3 psi).

Cycling Pressure Switch Setting (Accumulator Readings)

Compressor Cut-Out Pressure Range: 71-81 kPa (21-24 psi)

Compressor Cut-In Pressure Range: 145.2-165.4 kPa (43-49 psi)

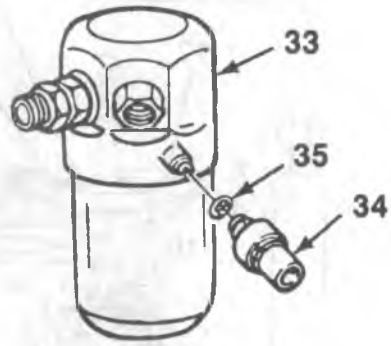

33. Accumulator
34. Switch
35. Seal
F7397

Figure 4 – Cycling Pressure Switch

PERIODIC MAINTENANCE AND SERVICING

Inspect the system once a year, preferably in the spring before warm weather.

Check refrigerant lines for leaks.

Check refrigerant charge; evacuate and recharge as necessary.

SYSTEM OPERATION – R/V

For information on selector switch, select valve and fan switch operating characteristics, refer to figure 5.

FUNCTIONAL TEST – R/V

To check the operation of the control assembly, perform each of these tests as one complete operation. Refer to figure 6.

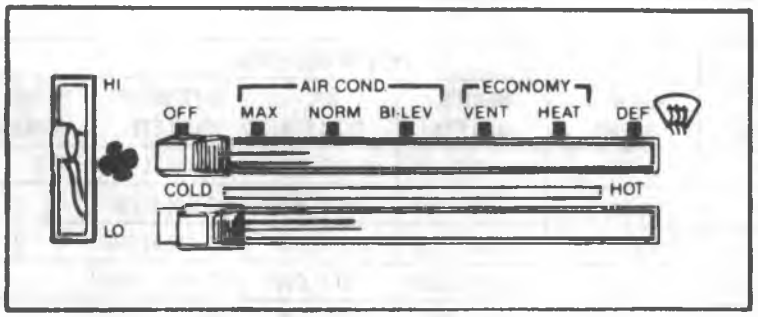

SELECTOR SWITCH OPERATING CHART (ELECTRICAL PORTION OF SWITCH)

CONNECTION	TERMINAL NUMBER	OFF	MAX A/C	NORM A/C	BI-LEV A/C	VENT	HEATER	DEFROST
FAN SWITCH	2	NONE	BATTERY +	BATTERY +	BATTERY +	BATTERY +	BATTERY +	BATTERY +
COMPRESSOR	3	NONE	BATTERY +	BATTERY +	BATTERY +	NONE	NONE	BATTERY +
NOT USED	4	NOT USED						
BATTERY +	5	NONE	BATTERY +	BATTERY +	BATTERY +	BATTERY +	BATTERY +	BATTERY +

SELECT VALUE OPERATING CHART (VACUUM PORTION OF SWITCH)

CONNECTION	PORT	OFF	MAX A/C	NORM A/C	BI-LEV A/C	VENT	HEATER	DEFROST
	1	NOT USED — SEALED IN THE CONNECTOR						
OUTSIDE AIR/ RECIRCULATION	2	NO VACUUM	VACUUM	NO VACUUM	NO VACUUM	NO VACUUM	NO VACUUM	NO VACUUM
HEAT - DEF	3	VACUUM	VACUUM	VACUUM	VACUUM	VACUUM	VACUUM	VENT
INPUT	4	VACUUM	VACUUM	VACUUM	VACUUM	VACUUM	VACUUM	VACUUM
A/C MODE	5	NO VACUUM	VACUUM	VACUUM	NO VACUUM	VACUUM	NO VACUUM	NO VACUUM
	6	NOT USED — SEALED IN THE CONNECTOR						
	7	NOT USED — SEALED IN THE CONNECTOR						
	8	NOT USED — SEALED IN THE CONNECTOR						
BI-LEVEL	9	NO VACUUM	VACUUM	VACUUM	VACUUM	VACUUM	NO VACUUM	NO VACUUM

BLOWER SWITCH

TERMINAL	POSITIONS			
	LO	MEDIUM 1	MEDIUM 2	HI
BATTERY +	NONE	MEDIUM 1	MEDIUM 2	HI
HI	NONE	NONE	NONE	BATTERY +
MEDIUM 1	NONE	BATTERY +	OPTIONAL	NONE
MEDIUM 2	NONE	NONE	BATTERY -	OPTIONAL

L1056

Figure 5—System Operation

R/V Functional Test — Air Conditioning

	CONTROL SETTINGS			SYSTEM RESPONSE				
STEP	MODE CONTROL	TEMPERATURE CONTROL	FAN SWITCH	BLOWER SPEED	HEATER OUTLETS	A/C OUTLETS	DEFROSTER OUTLETS	SEE REMARKS
1	OFF	COLD	OFF	OFF	NO AIR FLOW	NO AIR FLOW	NO AIR FLOW	
2	MAX	COLD	LO	LOW	NO AIR FLOW	AIR FLOW	NO AIR FLOW	A
3	MAX	COLD	LO TO HI	LOW TO HI	NO AIR FLOW	AIR FLOW	NO AIR FLOW	B
4	NORM	COLD	LO TO HI	LO TO HI	NO AIR FLOW	AIR FLOW	NO AIR FLOW	B
5	BI-LEV	COLD	HI	HI	AIR FLOW	AIR FLOW	MIN AIR FLOW	A
6	VENT	COLD	HI	HI	NO AIR FLOW	AIR FLOW	NO AIR FLOW	A
7	HTR	HOT	HI	HI	AIR FLOW	NO AIR FLOW	MIN AIR FLOW	A, D
8		HOT	HI	HI	MIN AIR FLOW	NO AIR FLOW	AIR FLOW	A

REMARKS

A. Detent engagement must be felt in each mode.
B. Blower speed increase must occur from low, medium 1, medium 2, and high.
C. Listen for the reduction of air noise due to recirculation door closing.
D. Check temperature lever for effort.

NOTE Check outlets for:

1. Barrel rotation.
2. Vane operation.
3. Barrel and vanes must hold position in high blower.

Cold/Hot Air Check

1. With the mode lever in maximum, the temperature lever in cold, the blower switch in high, the temperature from the center outlet should drop 20° from the temperature outside the vehicle (in room temperature or warmer conditions).
2. With the mode lever in defrost, the temperature lever in hot, the blower switch in high, the temperature from the defrost outlet should be above the temperature outside the vehicle.

L1050

Figure 6—Functional Test—R/V

REFRIGERANT-12 DESCRIPTION

SYSTEM COMPONENTS, TEMPERATURE AND PRESSURE RELATIONSHIPS

To review system components and Refrigerant-12 flow, refer to figure 7.

To find the pressure and temperature relationship between Refrigerant-12 and atmosphere pressure, refer to figure 8.

REFRIGERANT AND OIL CAPACITY

The refrigerant system requires refrigerant and oil in quantities listed.

HANDLING REFRIGERANT-12

Air conditioning systems contain Refrigerant-12, a chemical which requires special handling to avoid personal injury.

Always wear goggles and wrap a clean cloth around fittings, valves and connections when operating the system. Work in a ventilated area and do not weld or steam clean near air conditioning lines or components.

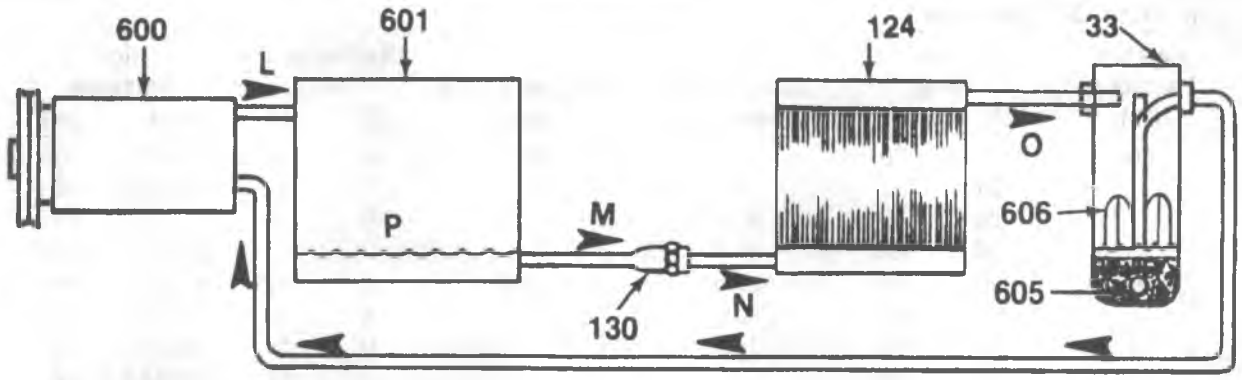

L. "High Pressure Vapor" leaving compressor.
M. "High Pressure Liquid" vapor is cooled down by condenser air flow and leaves as high pressure liquid.
N. "Low Pressure Liquid" - Orifice meters the liquid R-12 into evaporator, reducing its pressure and warm blower air across evaporator core causes boiling off of liquid into vapor.
O. "Low Pressure Vapor" - leaves evaporator as low pressure vapor and returns with the small amount of "Low Pressure Vapor/Low Pressure Liquid".
P. "Low Pressure Vapor/Low Pressure Liquid" - Low Pressure liquid that didn't boil off completely back to the compressor to be compressed again.

33. Accumulator
124. Evaporator
130. Expansion Tube (Orifice)
600. Compressor
601. Condenser
605. Oil Bleed Hole
606. Dessicant Bag

L0260

Figure 7 – System Components

Refrigerant-12	**Front (C60) System**
R/V Models	1.463 Kg (3 lbs., 0 ozs.)
	Rear Interior (C69) System
R/V Models	2.381 Kg (4 lbs., 8 ozs.)
525 Viscosity Oil	**Front (C60) System**
R/V (With R-4)	177.4 ml (6 ozs.)
R/V (With HR-6)	236.6 ml (8 ozs.)
	Rear Interior (C69) System
R/V (With R-4)	266.1 ml (9 ozs.)
R/V (With HR-6)	236.6 ml (8 ozs.)

GMTB-3216-2A

Refrigerant-12 drums are shipped with a metal screw cap that protects the valve and safety plug from damage. Replace the cap after each use.

Do not carry a container of Refrigerant-12 in the passenger compartment of a vehicle. Never subject any container to high temperatures. Do not breath the smoke or fumes produced by burning Refrigerant-12.

If Refrigerant-12 touches exposed flesh or contacts eyes do the following:

- Treat area as if it were frost bitten or frozen.
- Call a doctor or eye specialist and obtain treatment.
- DO NOT RUB THE EYE. Splash the area with cold water to raise temperature above the freezing point.
- Use an antiseptic oil to provide a protective film over the eyeball to reduce the possibility of infection.

HANDLING REFRIGERANT LINES AND FITTINGS

Tighten tubing connections to the specified torque (figure 9). Insufficient or excessive torque causes loose joints or deformed joint parts. Either condition can cause refrigerant leakage.

- All metal tubing lines should be free of dents or kinks to prevent loss of system capacity due to a line restriction.

In Front Of Condenser								
Relative Humidity (%)	Air Temp. C°	Air Temp. F°	Evaporator Pressure	Engine Speed (rpm)	Discharge Air Temp. C°	Discharge Air Temp. F°	High Pressure kPa	High Pressure psi
20	21	70	29.5	2000	4	40	1034.25	150
	27	80	29.5		7	44	1310.05	190
	32	90	30.0		9	48	1689.27	245
	38	100	31.0		14	57	2102.97	305
30	21	70	29.5	2000	6	42	1034.25	150
	27	80	30.0		8	47	1413.47	205
	32	90	31.0		11	51	1827.17	265
	38	100	32.0		16	61	2240.87	325
40	21	70	29.5	2000	7	45	1137.67	165
	27	80	30.0		9	49	1432.42	215
	32	90	32.0		13	55	1930.60	280
	38	100	39.0		18	65	2378.77	345
50	21	70	30.0	2000	8	47	1241.10	180
	27	80	32.0		12	53	1620.32	235
	32	90	34.0		15	59	2034.02	295
	38	100	40.0		21	69	2413.25	350
60	21	70	30.0	2000	9	48	1241.10	180
	27	80	33.0		13	56	1654.80	240
	32	90	36.0		17	63	2068.50	300
	38	100	43.0		23	73	2482.20	360
70	21	70	30.0	2000	10	50	1275.57	185
	27	80	34.0		14	58	1689.27	245
	32	90	38.0		18	65	2102.97	305
	38	100	44.0		24	75	2516.67	365
80	21	70	30.0	2000	10	50	1310.05	190
	27	80	34.0		15	59	1723.75	250
	32	90	39.0		19	67	2137.45	310
90	21	70	30.0	2000	10	50	1379.00	200
	27	80	36.0		17	62	1827.17	265
	32	90	42.0		22	71	2275.35	330

F0337

Figure 8—Humidity, Temperature and Pressure Chart

- Never bend a flexible hose line to a radius of less than 4 times the diameter of the hose.
- Never place a flexible hose line closer than 65 mm (2 1/2-inches) to the exhaust manifold.
- Inspect flexible hose lines regularly for leaks or brittleness and replace if necessary.
- When disconnecting any fitting in the refrigeration system, discharge the system. However, proceed with caution. Open slowly. Keep face and hands away to prevent injury if there is liquid Refrigerant-12 in the line. Allow any pressure to bleed off as described under "Refrigerant Recovery and Recycling, Adding Oil, Evacuating and Charging Procedures" in this section.
- Cap or tape any line open to atmosphere to prevent dirt and moisture from entering the system.
- Use proper wrenches when making connections on seal (O-ring) fittings. Use two wrenches to prevent distorting the lines or components.
- When connecting the flexible hose connections, hold the swaged fitting, the flare nut and the coupling at the same time using two different wrenches to prevent turning the fitting and damaging the ground seat.
- Use seals (O-rings) in good condition. A burr or piece of dirt may cause a leak.
- Replace the seal when a connection has been broken. When replacing the seal, first dip it in clean 525 viscosity refrigeration oil.
- When making steel-to-aluminum connection, use the torque for aluminum tubing. (Refer to figure 9.)

MAINTAINING CHEMICAL STABILITY

The efficient operation of the air conditioning refrigeration system is dependent upon the chemical stability of Refrigerant-12.

Foreign matter can change the stability of Refrigerant-12 causing corrosion and wear. Do the following:

1. Before disconnecting a refrigerant connection, remove dirt or oil at and near the connection. Cap or plug both sides of the connection.
2. Keep tools clean and dry.

Metal Tube Outside Diameter	Thread and Fitting Size	Steel Tubing Torque		Aluminum or Copper Tubing Torque		Nominal Torque Wrench Span
		N•m	Lb. Ft.	N•m	Lb. Ft.	
1/4	7/16	14-20	10-15	7-8	5-7	5/8
3/8	5/8	41-48	30-36	15-18	11-13	3/4
1/2	3/4	41-48	30-36	20-27	15-20	7/8
5/8	7/8	41-48	30-36	28-37	21-27	11/16
3/4	1 1/16'	41-48	30-36	38-44	28-33	1 1/4

L0206

Figure 9 – Pipe and Hose Connections Torque

3. When adding 525 viscosity refrigerant oil (refer to ADDING OIL in the "Refrigerant Recovery and Recycling, Adding Oil, Evacuating and Charging Procedures" in this section for CCOT A/C systems), the transfer device and container should be clean and dry.
4. Have everything ready before opening a line. Do not leave the A/C system open longer than necessary.
5. After opening, evacuate before recharging with Refrigerant-12 according to Refrigerant Recovery and "Recycling, Adding Oil, Evacuating and Charging Procedures" in this section.
6. Service parts are dehydrated and sealed before shipping. Open just before making connections. Keep at room temperature before uncapping (this prevents moisture from entering the system). If the connections are not made, reseal the parts.

DIAGNOSIS OF REFRIGERANT SYSTEM

NOTICE: When performing air conditioning diagnosis on vehicles equipped with a catalytic converter, warm the engine to a normal operating temperature before attempting to idle the engine for periods greater than five minutes.

INSUFFICIENT COOLING "QUICK-CHECK" PROCEDURE

Use the following "hand-feel" procedure if the system has the proper charge of Refrigerant-12 (providing ambient temperature is above 21°C (70°F).

1. Engine must be warm and at normal idle speed.
2. Hood and body doors open.
3. Selector (mode) lever set at NORM.
4. Temperature LEVER AT cold.
5. Blower on HI.
6. With compressor engaged, "hand-feel" the temperature of the accumulator and the evaporator inlet pipe downstream of the orifice.

- BOTH THE SAME TEMPERATURE AND SOME DEGREE COOLER THAN AMBIENT -- Proper condition: check for other problems (refer to A/C System Diagnostic Procedure).
- INLET PIPE COOLER THAN ACCUMULATOR SURFACE indicates a low refrigerant charge.
  - Add amounts 0.113 kg (4 oz.) of refrigerant UNTIL BOTH feel the same temperature. Allow stabilization time between additions.
  - Then add one 0.397 kg (0.88 lbs.) can additional refrigerant. The 0.397 kg/14 oz. disposable can of Refrigerant-12 is the equivalent to 0.88 lbs.

SYSTEM PERFORMANCE TEST

Tool Required:

J 21213-A Four Jack-Dual Range Temperature Tester

1. Open doors or windows.
2. Position the right lever in the "NORM" mode.
3. Place the left lever in the cold (blue) position.
4. Place the blower switch at "Hi".
5. Install J 21213-A at the instrument panel right outlet (figure 10).
6. Start the engine and run at 2000 rpm.
7. After one minute, the minimum drop in temperature from the right outlet should be:

Condenser Inlet Temerature	21°C (70°F)	27°C (80°F)	32-44°C (90-110°F)
Instrument Panel Right Outlet Temperature (Minimum Drop)	11°C (20°F)	14°C (25°F)	17°C (30°F)

T2164

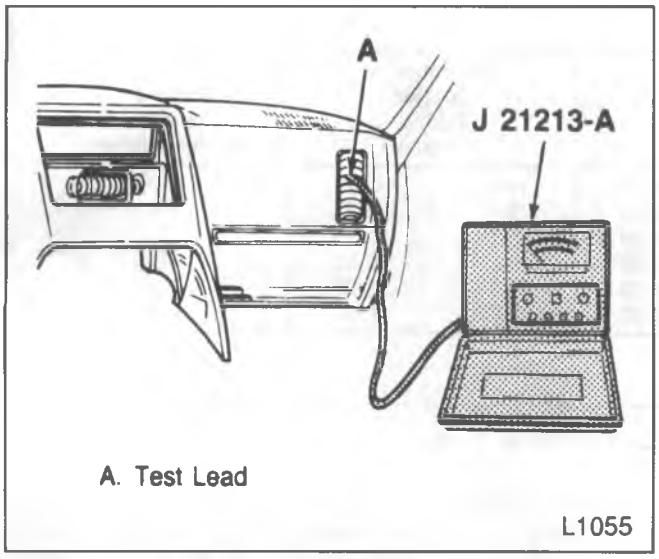

Figure 10—Installing Temperature Tester J 21213-A

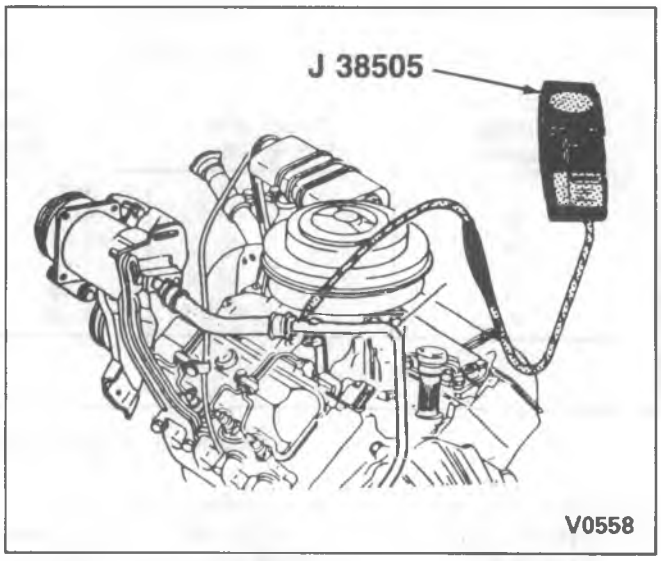

Figure 11—Leak Checking the System

TESTING THE REFRIGERANT SYSTEM

If a malfunction is suspected due to abnormal system pressures, check for the following:

1. Plugging in outer radiator and condenser cores. Check between the condenser and radiator.
2. Restrictions or kinks in evaporator core or condenser core, hoses, tubes, etc.
3. Refrigerant leaks.
4. Leaks or restrictions in air ducts. Air restriction may indicate a plugged (or partially plugged) evaporator core.
5. Compressor clutch slippage.
6. Improper drive belt tension.
7. Plugged accumulator, orifice (expansion tube) or plugged suction inlet screen (A6 Compressor).
8. Moisture in the refrigerant system.

LEAK TESTING THE REFRIGERANT SYSTEM

J 38505 — AUTOBALANCE REFRIGERANT LEAK DETECTOR

Electronic circuitry detects refrigerant or halogen gas leaks as small as 1/2 oz. per year. J 38505 features a slide-type on-off switch that also resets the unit in contaminated areas.

Leaks are detected through a change in signal tone and flashing Light Emitting Diode (LED) built into the 45.7 cm (18-inch) flexible probe (figure 11). A 102 cm (40-inch) coiled extension permits detection in hard-to-reach places.

A green LED battery life monitor glows to indicate sufficient operating voltage when the unit is on. Field service is possible with replacement tips, filters and a sensing element which can be cleaned with common solvent.

PRESSURE SENSING SWITCH

A pressure sensing switch located near the top of the accumulator, cycles the compressor clutch. The switch also shuts off the compressor clutch when there is a low refrigerant charge.

The A/C system does not have to be discharged to replace the switch. The pressure switch fitting is equipped with a schrader-type valve.

When replacing the switch, use a new oiled seal (O-ring), and tighten switch to 10 N•m (90 in. lbs.).

Refer to the following trouble shooting charts:

1. Insufficient Cooling Diagnosis (figures 12 through 16).
2. Compressor Diagnosis (figure 17).

COMPRESSOR CUT-OUT SWITCHES

The 7.4 L engine (L19) is equipped with two compressor cut-out switches. If the engine temperature gets too high (usually during idle after high loading conditions), these switches shut off the A/C compressor, reducing the load on the engine and preventing engine overheating.

One switch, a coolant cut-out switch, is located in the thermostat housing. When the coolant in the top tank reaches 124°C (255°F), the switch shuts off the compressor. When the coolant temperature drops below 116°C (240°F), the switch allows the compressor to re-engage.

The second switch, the head pressure cut-out switch, is located in the back of the A/C compressor. This switch senses compressor outlet pressure. When the pressure exceeds 2,827-3,103 kPa (410-450 psi), the compressor is shut off until the pressure drops below 1,448-1,724 kPa (210-250 psi).

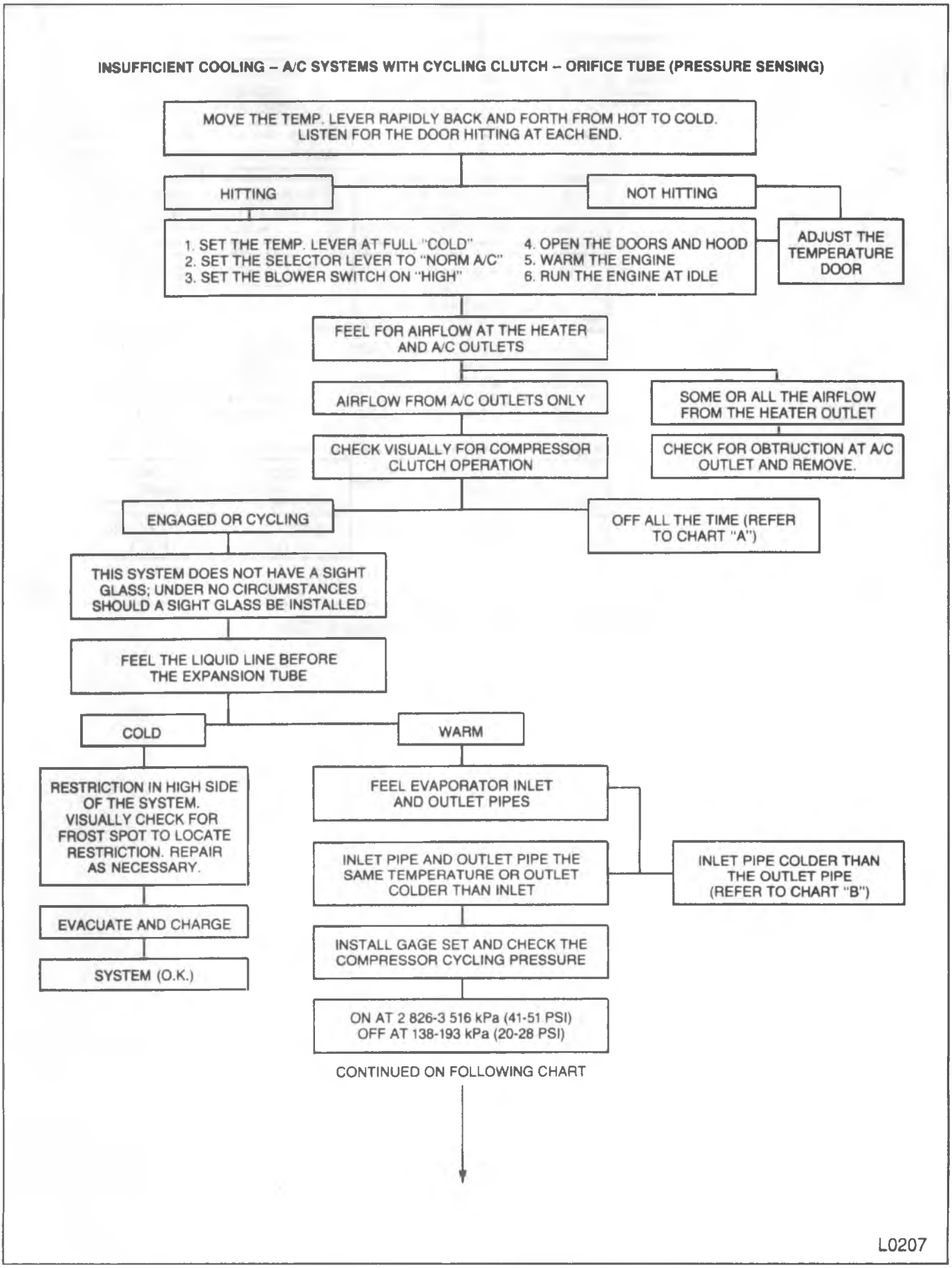

Figure 12—Insufficient Cooling Diagnosis

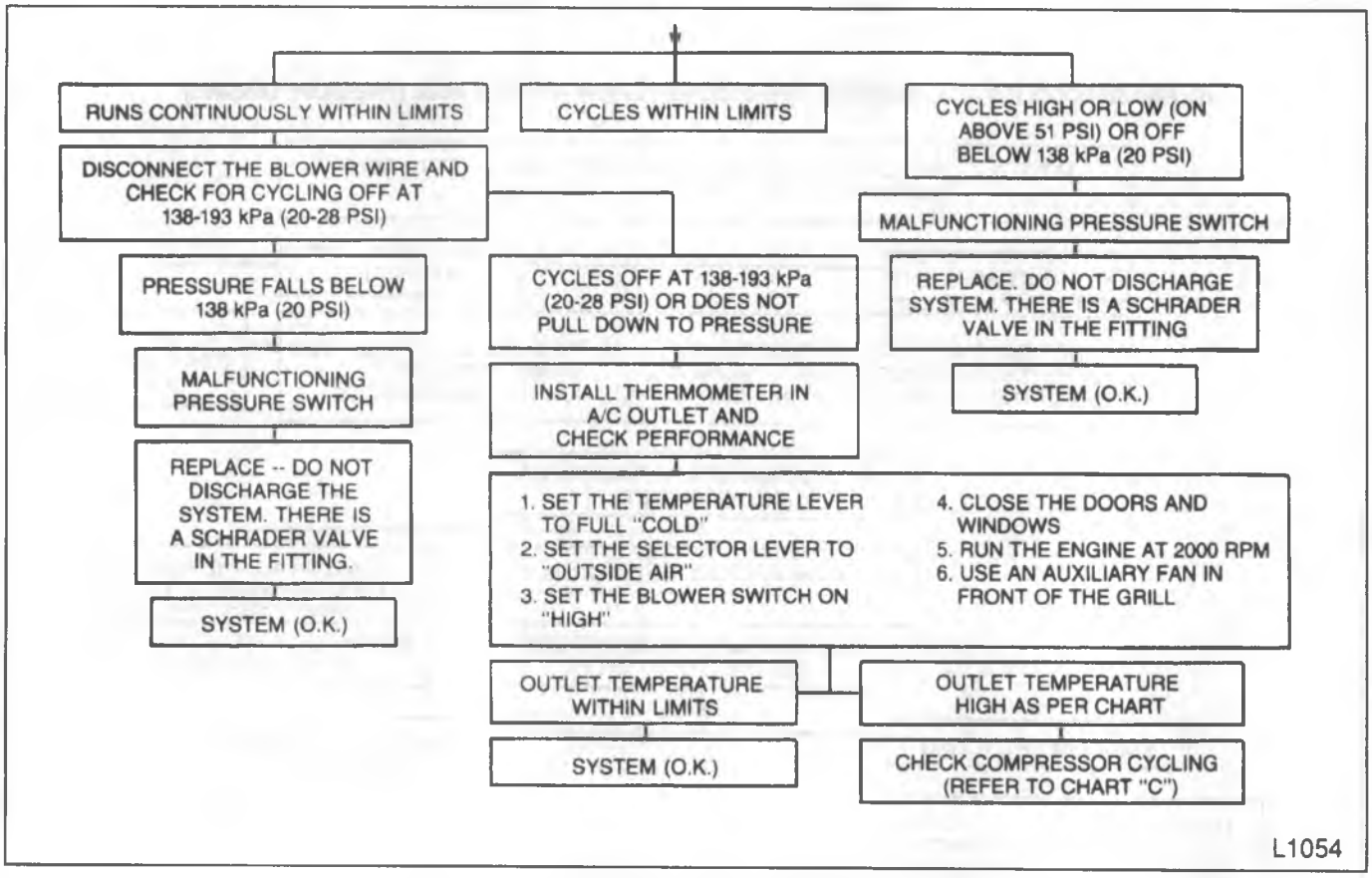

Figure 13 – Insufficient Cooling Diagnosis (Cont.)

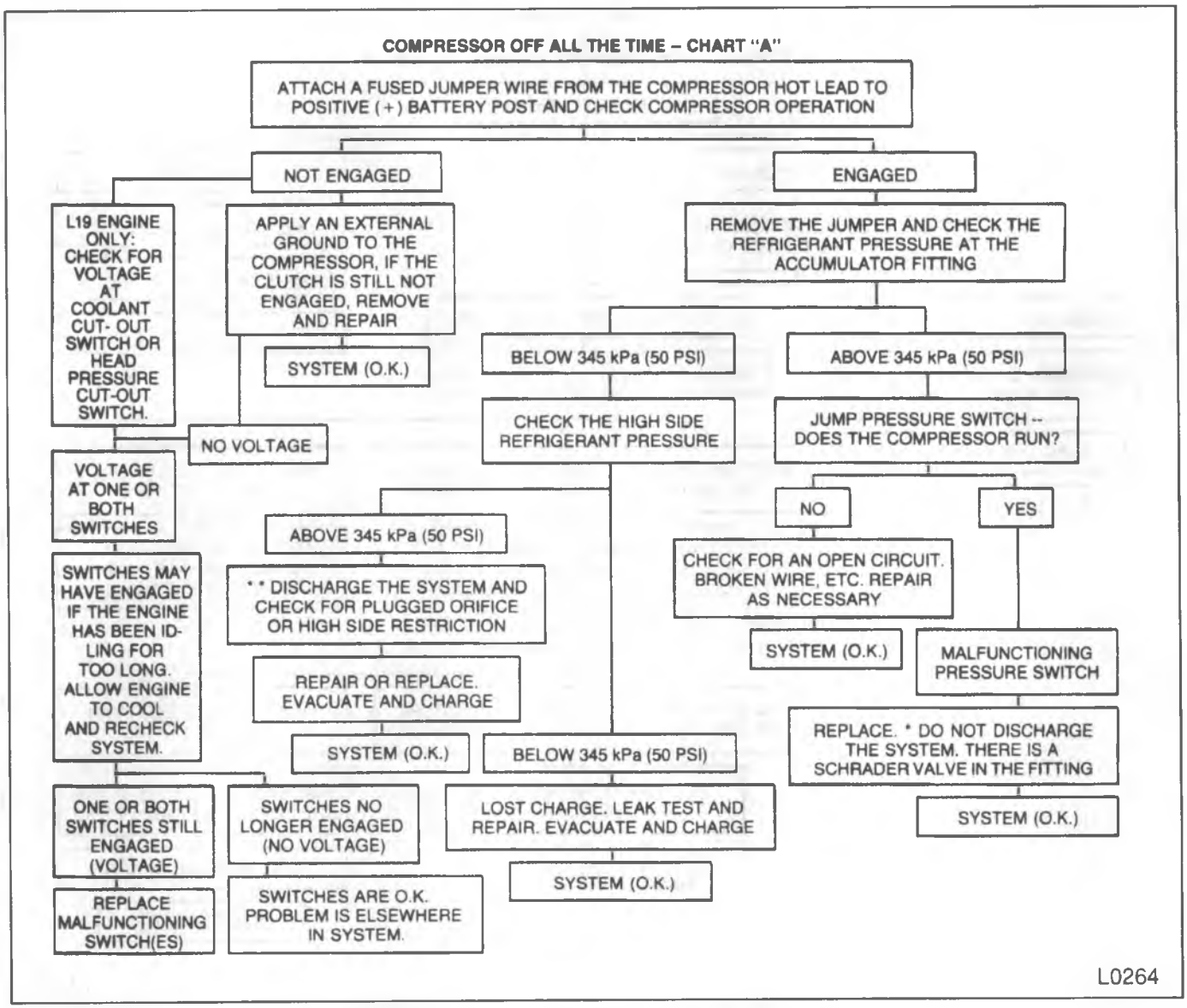

Figure 14 – Insufficient Cooling Diagnosis – Chart A

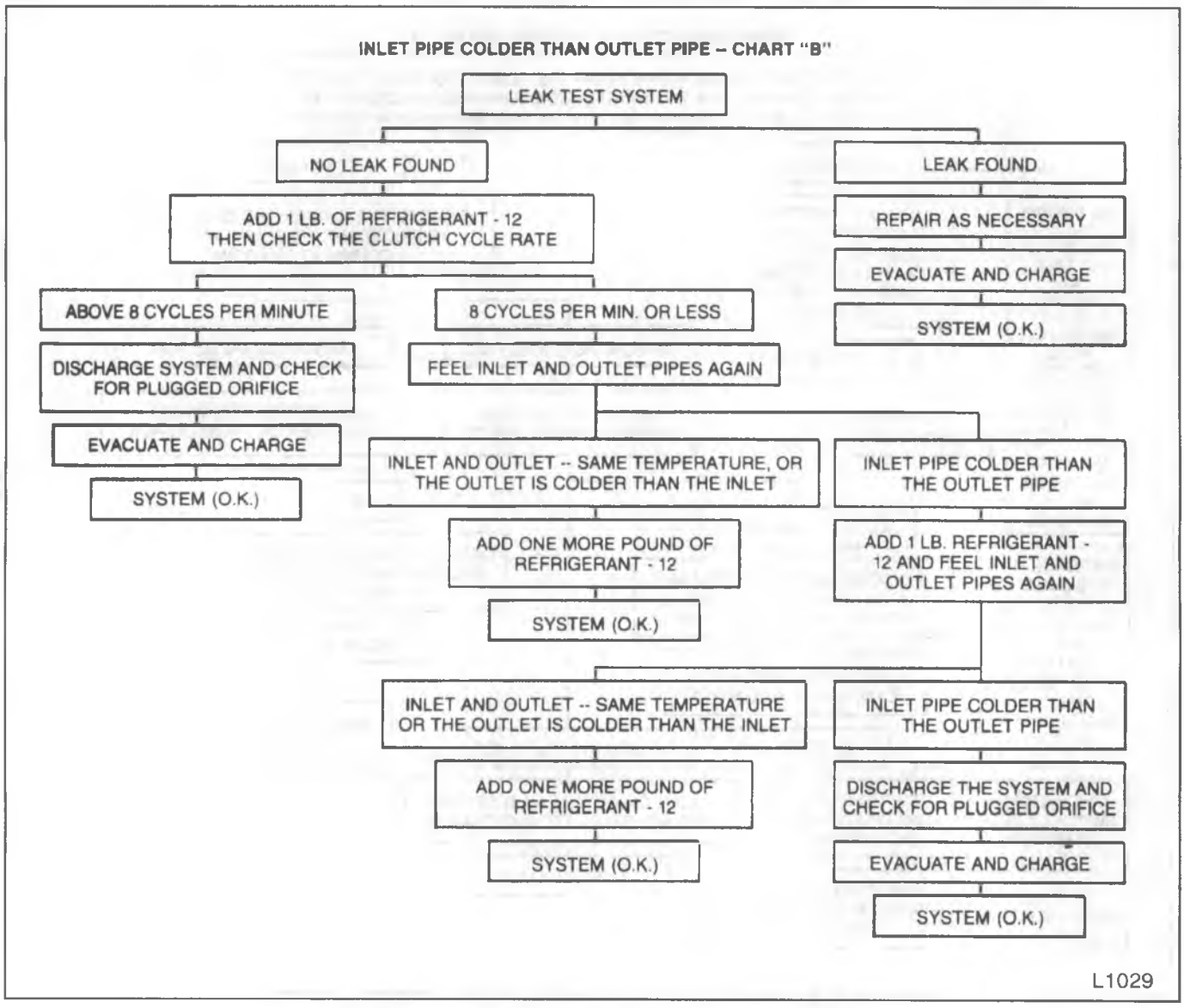

Figure 15 – Insufficient Cooling Diagnosis – Chart B

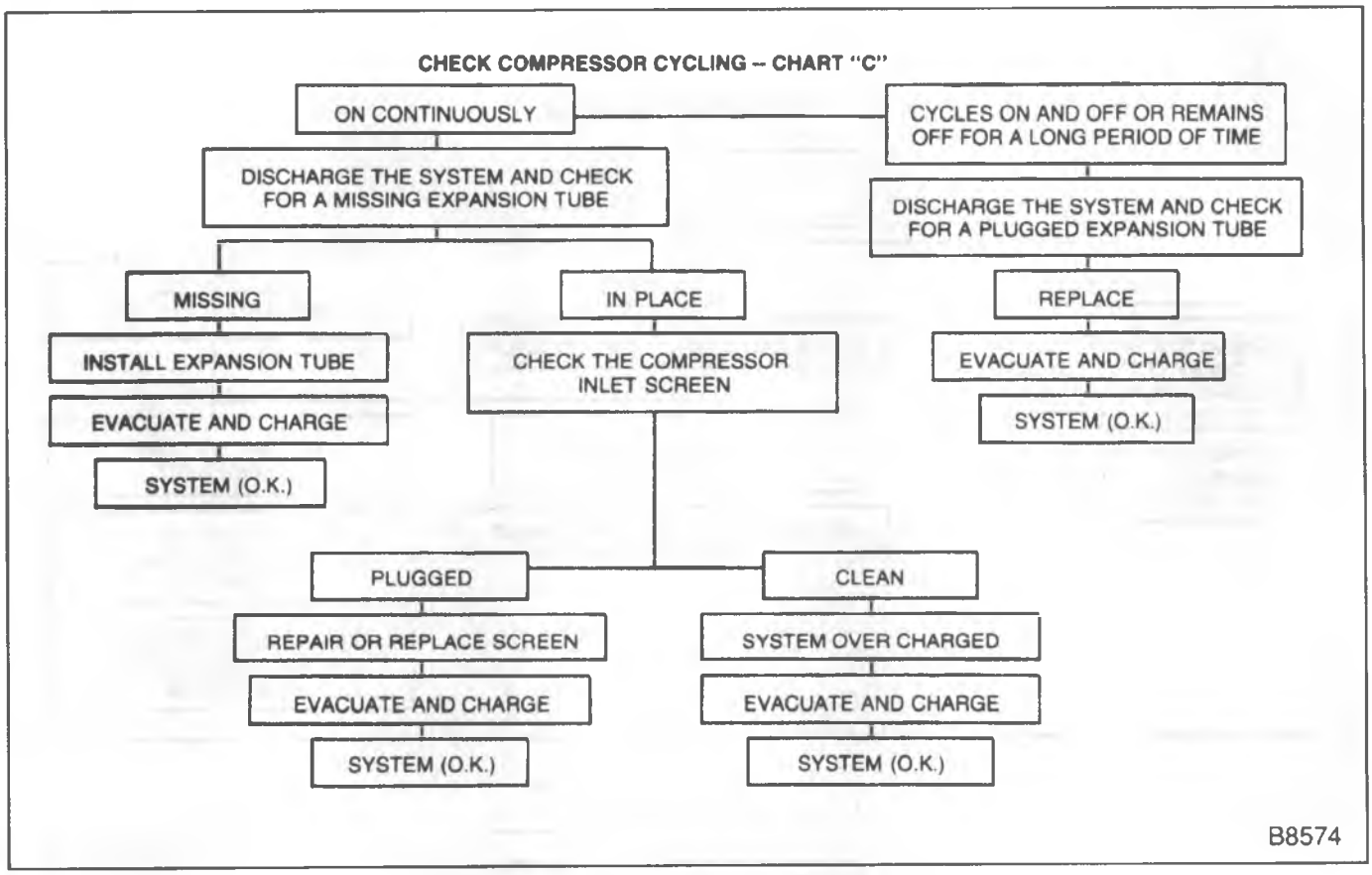

Figure 16 – Insufficient Cooling Diagnosis – Chart C

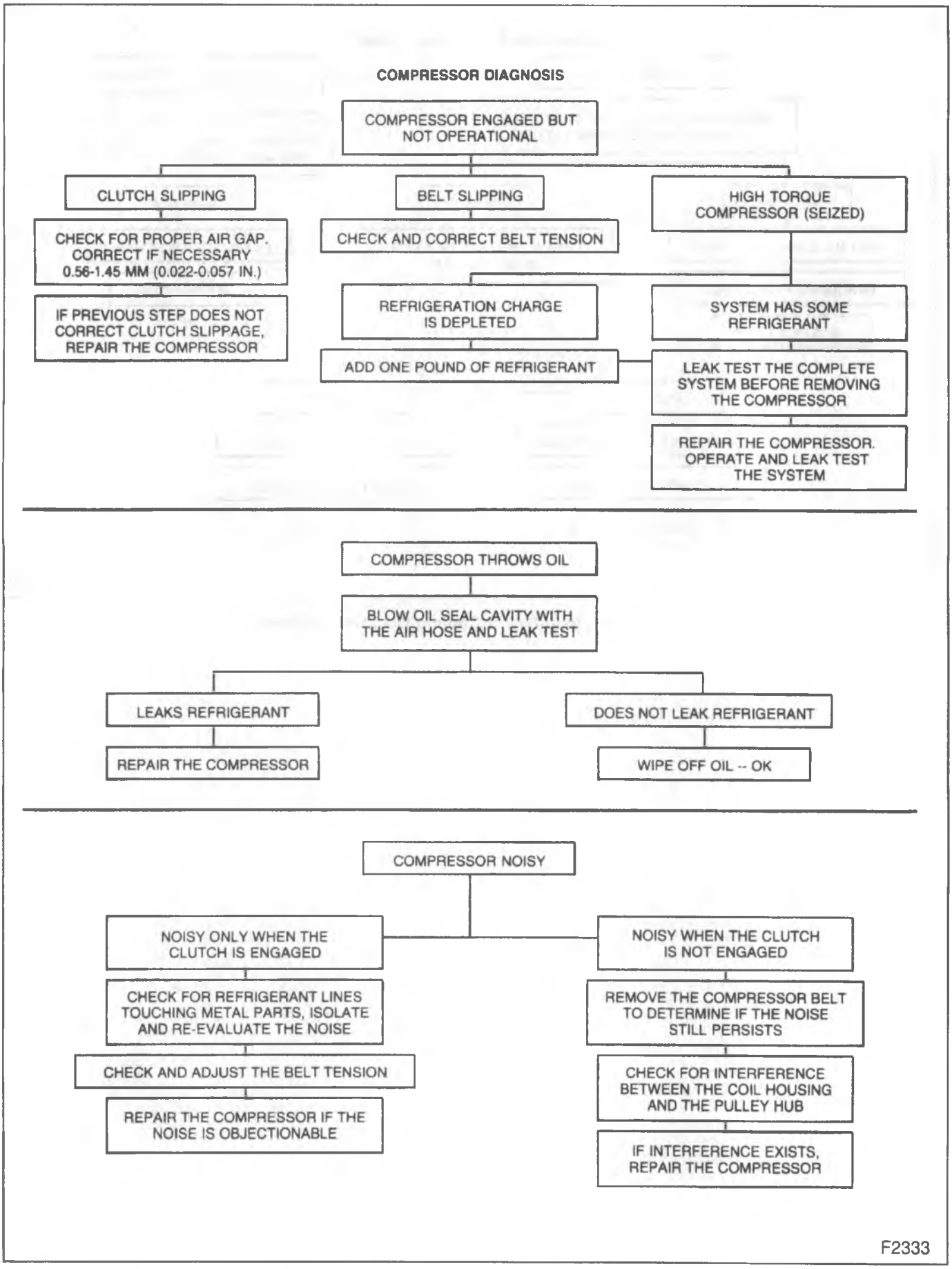

Figure 17 – Compressor Diagnosis

DIAGNOSIS OF THE REFRIGERANT RECOVERY AND RECYCLING SYSTEM

PROBLEM	POSSIBLE CAUSE	CORRECTION
High Pressure Light Comes On and Compressor Stops	• Valve at tank is closed. • Tank is completely full of refrigerant.	• Open valve. • Remove and replace tank. • Check weight platform calibration or consult factory.
Compressor Continues Operation After 17 in. Vacuum Has Been Reached.	• Faulty vacuum switch.	• Replace switch.
Compressor Starts But Does Not Run	• High compressor temperature. • Faulty thermal overload. • Faulty compressor. • Compressor oil quantity low.	• Allow compressor to cool down. • Consult factory. • Remove and replace compressor. • Fill compressor with fresh oil.
Dot in Center of Moisture Indicator Does Not Change Color	• Wet filter drier core. • Faulty moisture indicator.	• Remove and replace filter drier core. • Remove and replace moisture indicator.
Compressor Does Not Pull System to the 17 in. Vacuum Level	• Compressor oil quantity low. • Leak in system. • Faulty compressor.	• Fill compressor with fresh refrigeration oil. • Repair leak. • Remove and replace compressor.
Refrigerant Does Not Circulate	• Liquid valve on tank closed. • Vapor valve on tank closed. • Pump decoupled. • Faulty refrigerant pump.	• Open valve. • Open valve. • Turn pump off then restart. • Remove and replace pump.

D0202

REFRIGERANT RECOVERY AND RECYCLING, ADDING OIL, EVACUATING AND CHARGING PROCEDURES

REFRIGERANT RECOVERY AND RECYCLING

The Air Conditioning Refrigerant Recovery and Recycling Station (J 38100-B) is designed to be compatible with charging station J 23500-01 or its equivalent. The recovery and recycling operations are performed separately with the capability to recycle 13.6 kg (30 lbs.) in one operation. Two 13.6 kg (30 lbs.) capacity reuseable tanks are included with the station.

NOTICE: The Air Conditioning Refrigerant Recovery and Recycling Station meets UL® standards for moisture and contamination removal. Recovery systems which cannot meet these standards are not approved for warranty repairs. Reuse of moisture or particulate contaminated refrigerant will result in premature compressor and other component failure.

CAUTION: Always wear goggles and wrap a clean cloth around fittings and/or connections when doing work that involves opening the refrigeration system. If liquid refrigerant comes into contact with the skin or eyes, injury may result.

- Before removing and replacing any of the air conditioning refrigeration lines or components, the refrigerant must be completely recovered.
- Always use service valve and pressure gage sets during evacuation and charging procedures.
- Do not charge while compressor system is hot.
- Always check the A/C system for pressure with a manifold gage set to determine if refrigerant is present in the system. Performing recovery on an A/C system which is open to the atmosphere as a result of a leak, would allow the recovery station to pull only air into the tank.

CAUTION: Never remove a gage line from its adapter when the line is connected to the A/C system. Always remove the line adapter from the service fitting to disconnect a line. Do not remove the charging hose at the gage set while attached to the service low-side fitting. This will result in complete discharge of the system due to the depressed Schrader-type valve in the service low-side fitting and may cause personal injury due to escaping refrigerant.

STATION (ACR) SETUP AND MAINTENANCE

FILTER DRIER INSTALLATION

Important

- USE ONLY AUTHORIZED FILTER DRIER CORES. Use of any other cores will give unsatisfactory results and will void the warranty.

1. Remove the screws holding the filter cap to the shell. Inside you will find a filter drier core bracket (attached to the cap), and a piece of cardboard separating the bracket and the filter cap. Refer to figure 18.
2. Clean all internal parts with a lint free towel.
3. Discard the cardboard separator.
4. Remove the filter drier core from the sealed can. Do not remove the filter from the can until you are ready to install it in the system.
5. If the filter cap gasket is damaged, replace it. Replacement gaskets are included with each filter drier core.
6. Center the spring on the filter cap and place the upper bracket on the spring with the center boss of the bracket fitting into the coil and the edges of the plate facing up.
7. Position the filter drier core on the upper bracket. Position the screened lower bracket on the filter drier core and install the rods. Tighten the tie rods until they stop.
8. Install the filter drier core assembly into the filter drier shell. Replace the bolts and tighten in a star pattern to a torque of 20 N•m (15 ft. lbs.).
9. When the core has been installed and the filter drier reassembled, attach the blue hose to the vacuum pump and run the pump for approximately 10 minutes to remove all air.
10. Turn off the vacuum pump and disconnect the hose.

RECOVERY TANK INSTALLATION

CAUTION: Use authorized refillable refrigerant tanks only. Use of non-refillable tanks could cause personal injury and will void the warranty. Non-refillable tanks will affect weight platform calibration and will result in overfilled tanks. Overfilling could cause the safety valve to "pop-off" releasing a large quantity of refrigerant. If liquid refrigerant comes into contact with the skin or eyes, personal injury may result.

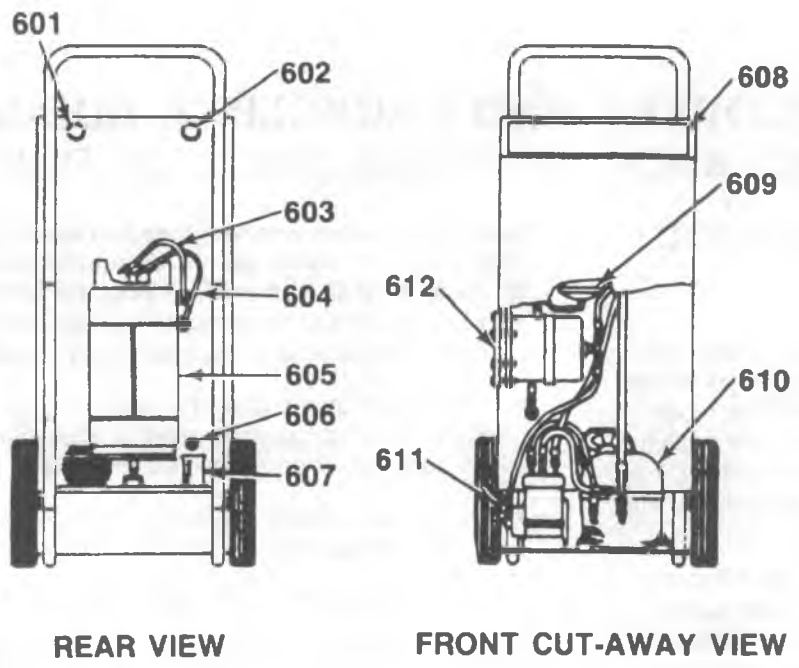

601. Accumulator Pressurizing Valve
602. Oil Drain Valve
603. Red Hose (Vapor)
604. Blue Hose (Liquid)
605. Tank
606. Oil Drain
607. Oil Drain Measured Container
608. Control Panel
609. Accumulator Oil Separator
610. Compressor
611. Filter Drier
612. Refrigerant Pump

F8701

Figure 18—ACR Component Locations

1. The recovery tank is supplied with 68.95-103.4 kPa (10-15 psi) of dry nitrogen to keep it clean and dry during shipment. Bleed this pressure from the tank before attaching the tank to the station by removing the sealing cap and opening either valve. A new tank without the precharge of dry nitrogen indicates a leak and should be immediately returned for replacement. (See Manufacturers Instruction Manual).
2. Place the tank on the scale platform at the rear of the station. Place the bottom lip of the tank around the outside diameter of the stand-off welded to the platform. This will center the tank automatically. Loosely fasten the strap around the tank in order to prevent the tank from tipping over.
3. Attach the red hose from the back of the station to a vacuum pump. Attach the blue hose from the back of the station to the "Liquid" port of the tank.
4. Open the "Liquid" valve on the tank. Turn on the vacuum pump. Pull a vacuum on the tank and station for approximately 10 minutes to remove all unwanted air from the tank and from the station.
5. After a vacuum has been pulled, turn off the vacuum pump and disconnect the hose from the vacuum pump. Attach the red hose to the "Vapor" port on the tank and open the "Vapor" valve.
6. Perform this service only when putting new tanks into service.

WEIGHT PLATFORM CALIBRATION

The weight platform should be checked for accuracy at least once a month. This calibration will assure that the compressor will shut off when the tank is full. Refer to figure 19.

CAUTION: Use of non-refillable tanks will affect platform calibration and will result in over filling of non-refillable tanks. Overfilling could cause the safety valve to "pop-off" releasing a large quantity of refrigerant. If liquid refrigerant comes into contact with the skin or eyes, personal injury may result.

1. Place a known 45 lb. weight centered on the platform. The switch should just trip or be very close to tripping with this amount of weight.
2. If the switch is tripped, the mechanism is in calibration. If the switch does not trip, place a 2 lb. weight on top of the 45 lb. weight. This weight should definitely trip the switch. If the switch is tripped, the mechanism is in calibration. If the switch did not trip, the mechanism must be recalibrated.
3. To recalibrate, remove the 2 lb. weight and loosen the lock nut of the trip screw. Turn the trip screw until the switch just trips. Remove the 45 lb. weight.
4. To check, place the 45 lb. weight on the platform and repeat step No. 2. Repeat step No. 3 as required. Tighten lock nut of the trip screw when calibration is complete.

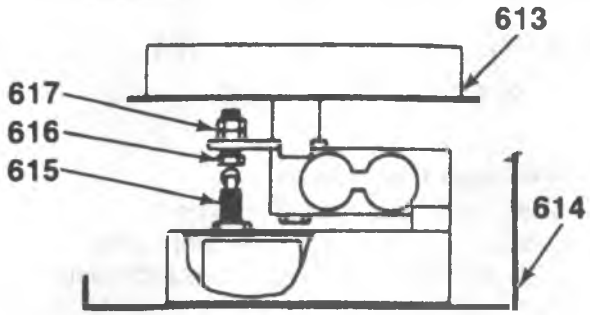

613. Platform Assembly
614. Station Back Panel
615. Trip Switch
616. Adjusting Screw
617. Locknut

F8702

Figure 19—Weight Platform Calibration

CONTROL PANEL

The control panel contains the switches and monitors as follows: (Refer to figure 20).

- Main Power Switch — supplies electrical power to the control panel.
- Compressor Start Switch — energizes compressor.
- Compressor On Light — lights when compressor is energized.
- High Pressure Light — lights when there is pressure above 1827 kPa (265 psi) in the system.
- Recovery Full Tank Light — lights when recovery tank is full.
- Recycling System Start Switch — energizes recycling pump.
- Recycling Pump On Light — lights when recycling pump is energized.
- Moisture Indicator — tells when refrigerant is wet or dry, or when filter core needs to be replaced, if no color change occurs in 2 hours of recycling.

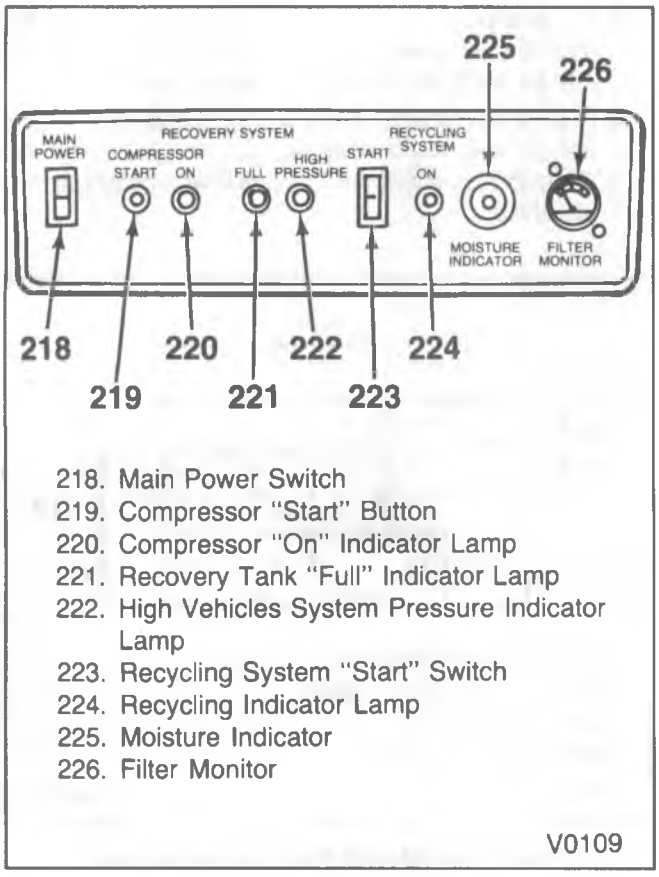

Figure 20—Control Panel

FILTER DRIER CORE REPLACEMENT

Guidelines for replacing the filter drier core:

- For proper contamination removal, replace the filter drier core after recycling a maximum of 300 pounds of refrigerant.
- If the moisture indicator does not change to green after two hours of filtering time, the filter drier core is saturated with moisture and should be changed.
- If the filter drier core becomes clogged with particulates, the filter monitor needle will register in the red zone; this also means the filter core should be changed.

CAUTION: Steps 2 and 3 are critical to avoid possible hazardous release of refrigerant. If liquid refrigerant comes into contact with the skin or eyes, injury may result.

NOTICE: Use only authorized filter drier cores. Use of any other cores will give unsatisfactory results and will void the warranty.

1. Close the "Liquid" valve on the tank. Refer to figure 21.
2. Attach the blue hose to the recovery inlet of the station.
3. Start the compressor and recover all refrigerant remaining in the station into the storage tank. The compressor will automatically shut off when recovery is complete.
4. Remove the bolts holding the filter cap to the shell. The filter drier core and bracket are attached to the filter cap.
5. Remove the tie rods from the filter cap and remove the filter drier core from the brackets.
6. Clean all internal parts.
7. Remove the filter drier core from the sealed can. Do not remove the filter from the can until you are ready to install it in the system.
8. If the filter cap gasket is damaged, replace it. Replacement gaskets are included with each filter drier core.
9. Center the spring on the filter cap and place the upper bracket on the spring with the center boss of the bracket fitting into the coil and the edges of the plate facing up.
10. Position the filter drier core on the upper bracket. Position the screened lower bracket on the filter drier core and install the tie rods. Tighten the tie rods until they stop.
11. Install the filter drier core assembly into the filter drier shell. Replace the bolts and tighten evenly, in a star pattern, to a torque of 20 N•m (15 ft. lbs.).
12. When the core has been replaced and the filter drier reassembled, attach the blue hose to the vacuum pump and start the vacuum pump. Run the pump for approximately 10 minutes to remove all air.
13. Turn off the vacuum pump and disconnect the hose.
14. Reattach the blue hose to the "Liquid" port of the tank and open the "Liquid" valve on the tank. You are now ready to continue recyling with your station.

REFRIGERANT RECOVERY

The refrigerant system must be discharged using an Air Conditioning Refrigerant and Recycling System J 38100-B. After repairing the malfunction the refrigerant system can then be evacuated and charged using air conditioning service charging station J 23500-01 or equivalent, or the manifold and gage set J 23575-01 and refrigerant.

Evacuation lines from the recovery system and the charging lines from the charging station or manifold and gage sets require the use of adapters to connect to the A/C system low-side service fitting. A straight adapter J 5420 and a 90° adapter J 9459 are available.

NOTICE: Failure to check for residual oil from the previous recovery can result in adding extra oil to the current vehicle being serviced. This will result in reduced performance and possible compressor damage.

1. Start the vehicle and run with the A/C on for 2 minutes then attach a manifold gage set to the A/C system and attach the recovery station inlet hose to the center fitting of the manifold gage set. Refer to figure 21.

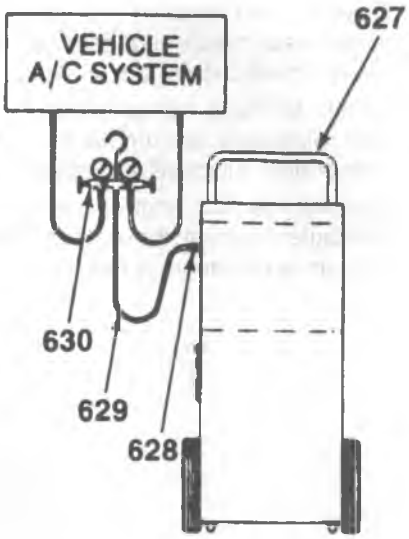

627. Refrigerant Recovery and Recycling Station
628. Station Left
629. Yellow Hose
630. Manifold Gage Set

F8704

Figure 21 – ACR Hook Up

2. Open both valves of the manifold gage set. Make certain the refrigerant tank "Vapor" valve and the " Liquid" valve are open.
3. Plug the station into a suitable AC power outlet and turn on the "Main Power" switch.
4. Depress the "Compressor Start" switch. The amber " Compressor On" light will come on and the compressor will start. The compressor will shut off automatically when recovery is complete. Wait 2 minutes and check for pressure rise. If pressure rise occurs depress "compressor start" switch and allow to repeat the recovery.
5. To drain the accumulator of refrigerant system oil, open the "Accumulator Pressurizing" valve for 15 seconds to allow some compressor discharge pressure back into the accumulator. Open the oil drain valve slowly and drain the accumulator. When the oil stops draining, close the oil drain valve. Do not allow the accumulator to completely depressurize.
6. Although refrigerant can be filtered and recylced at any time, it is recommended to recycle when the tank is full for greatest efficiency. Two tanks are provided so you can fill one, recycle it, and use it for charging systems while filling the second tank.

   When the recovery tank is full, the "Trip Switch" at the bottom of the weight platform will de-energize the compressor and the "Tank Full" light will come on. Close both valves, remove the tank from the platform, and replace with another refillable tank or recycle the first tank. If the first tank isn't immediately recycled take precautions to prevent its use in A/C systems BEFORE it is recycled. Additional tanks part number 17105 are available, see the "Replacement Parts" section of your operator's manual.

REFRIGERANT RECYCLING

1. Plug the station into a suitable AC power outlet and turn on the main power switch.
2. Open both valves on the recovery tank.
   - For efficiency, recycle full tanks of refrigerant.
3. Turn the "Recycle Start" switch to on. The amber " Recycle On" light will come on and the refrigerant pump will start.
4. Refrigerant will be seen going through the "Moisture Indicator" at start up. If there is sufficient supply of refrigerant, the bubbles will clear after a few seconds. When the bubbles clear from the "Moisture Indicator", the refrigerant is operating at maximum efficiency.
5. Allow the station to operate until the dot in the center of the "Moisture Indicator" turns green. The "Moisture Indicator Dot" should change to the shade indicated on the reference decal. Always run the recycling system a minimum of 30 minutes. If the "Moisture Indicator" starts out yellow, it could take as long as two hours to turn green, depending on the moisture content of the refrigerant.
6. Shut off the station when recycling is complete. This is not an automatic function.

   Guidelines for replacing the filter drier core:
   - For proper contaminant removal, replace the filter drier core after recycling a maximum of 136 kg (300 lbs.) of refigerant.
   - If the moisture indicator does not change to green after two hours of filtering time, the filter drier core is saturated with moisture and should be changed.
   - If the filter drier core becomes clogged with particulates, the filter monitor needle will register in the red zone; this also means the filter core should be changed.
   - If any of the recovered refrigerant being recycled is from a system with a hermetic motor burnout, run the recycling system for a minimum of 24 hours. Check the A/C system oil from the accumulator with an acid test kit to determine the acid quantity of the oil.

Operating Hints

1. When using the recovery station in conjunction with a charging station, attach the center port hose of the manifold gage set to the inlet port of the ACR station. Then follow the normal operating procedures for the recovery/recycling station.
2. When using the ACR station in conjunction with an automatic charging station, attach the exhaust hose to the inlet of the ACR station. On automatic A/C service stations, a hole has been added to the rear of the cabinet for convenient access to the exhaust hose. On older style stations, you must open the front doors of the cabinet to reach the exhaust hose.
3. Air is automatically vented from the recovery tank during recyling. This feature eliminates the need to "purge" hoses before recovering the refrigerant.

DIAGNOSIS OF ELECTRICAL/VACUUM SYSTEM

When diagnosing problems in the electrical and vacuum systems, refer to "System Operation" and "Functional Test." For electrical wiring and vacuum diagrams, refer to figures 22 through 25.

Ports on rotary vacuum valves are illustrated to provide simplicity in following vacuum schematic lines, but are numbered in consecutive order on the actual valve.

OPERATIONAL TEST

To determine if the electrical, vacuum and refrigeration systems are operating efficiently, do the following:

1. Operate the blower at four speeds and check the compressor clutch engagement. This indicates that the electrical circuits are working.
2. Check the hand felt temperature of the evaporator inlet pipe and accumulator surface. The same temperature indicates a properly charged system.
3. Operate the A/C control selector (mode) lever to distribute air from the outlets. This will check the vacuum and diaphram function.

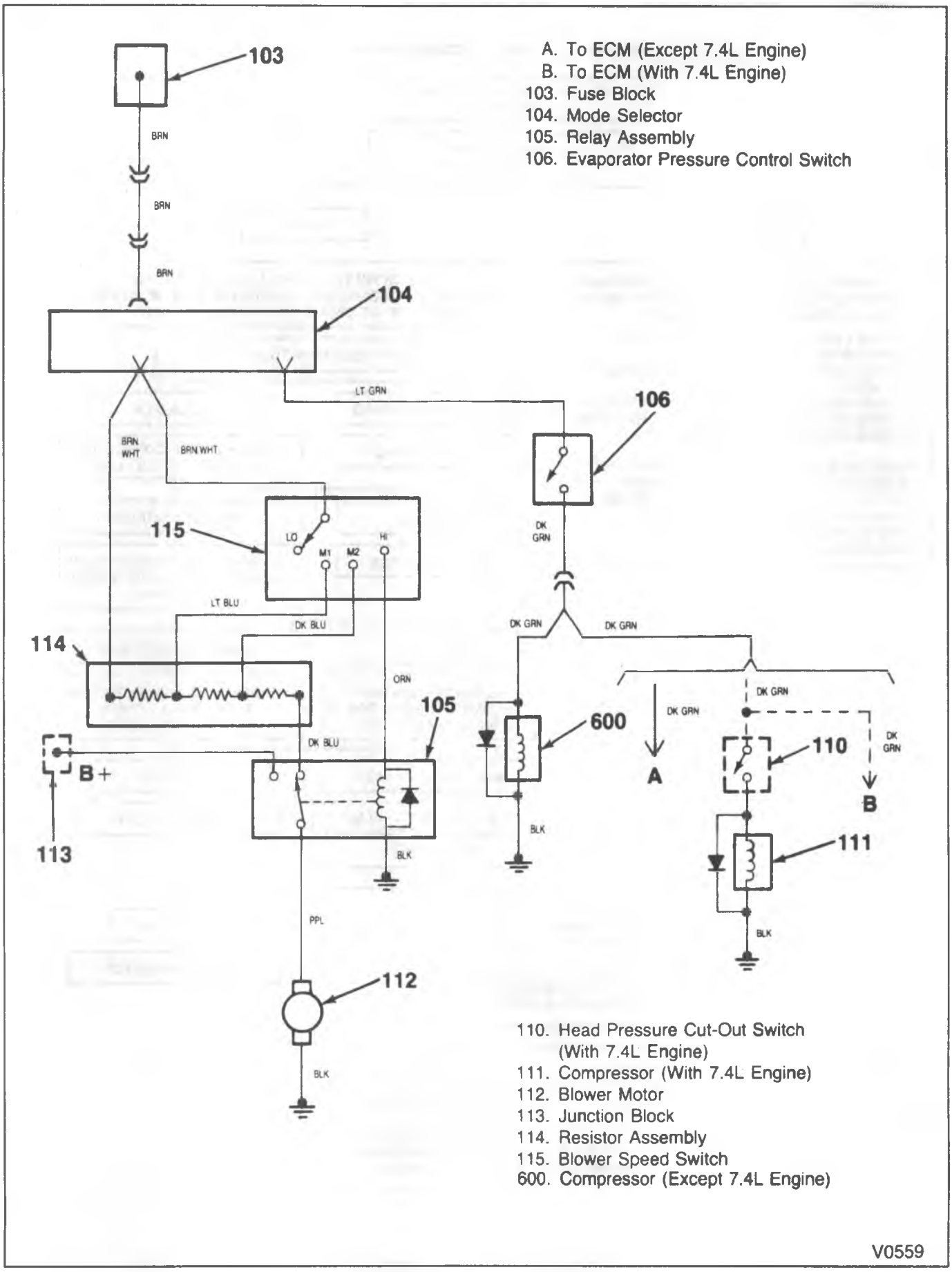

Figure 22—A/C Electrical System Diagram — Typical

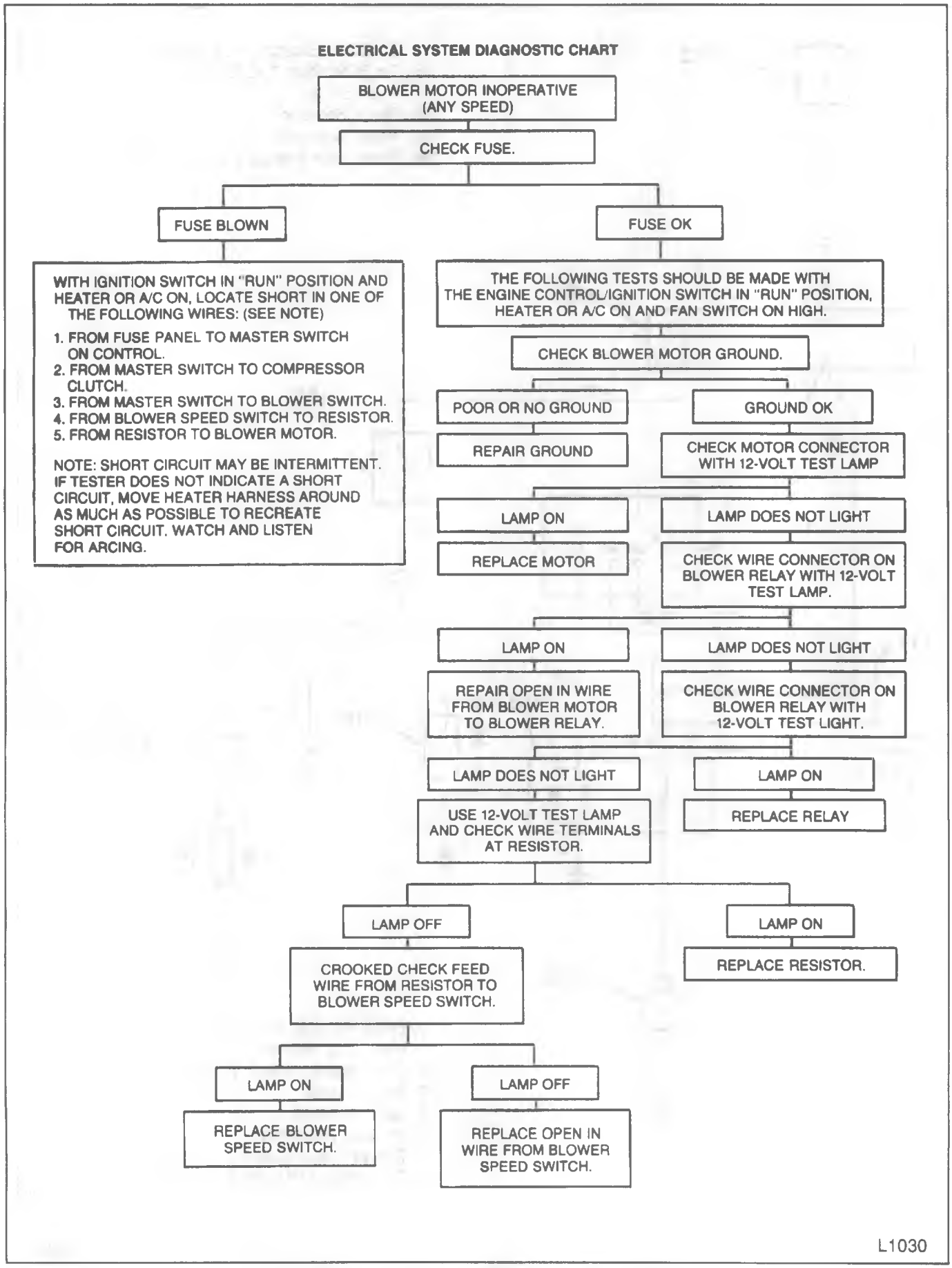

Figure 23 – Electrical System Diagnostic Chart

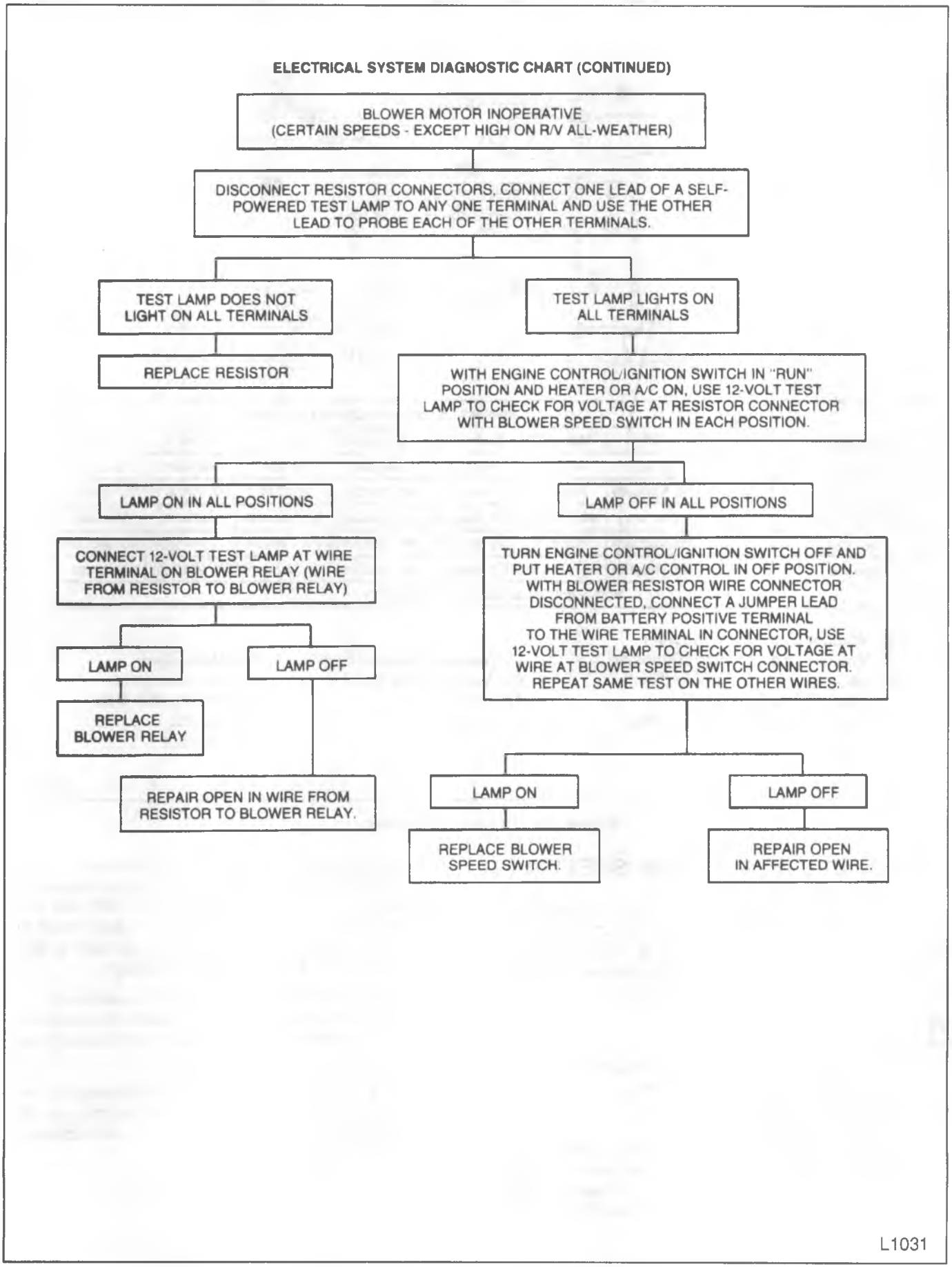

Figure 24—Electrical System Diagnostic Chart

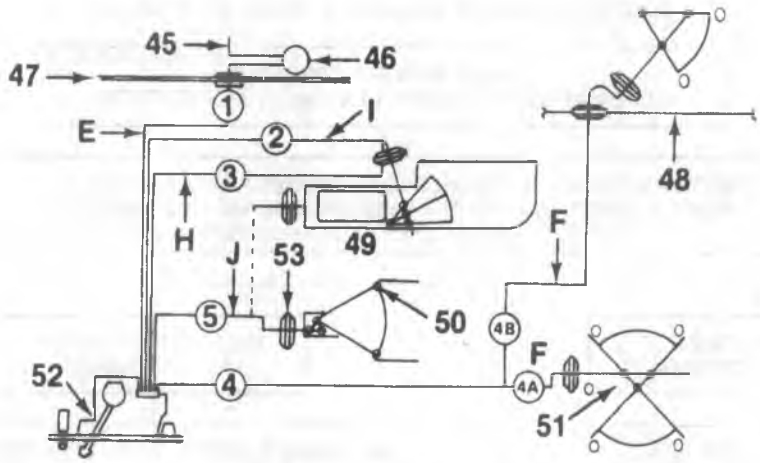

Connection	Port No.	Select Lever Valve Operation Chart						
		Off	Max A/C	Norm A/C	Bi-Level	Vent	Heat	Defrost
Source	1	Vacuum	Vacuum	Vacuum	Vacuum	Vacuum	Vacuum	Vacuum
A/C Mode	2	No Vacuum	Vacuum	Vacuum	No Vacuum	Vacuum	No Vacuum	No Vacuum
Heater/Mode	3	Vacuum	No Vacuum	No Vacuum	No Vacuum	No Vacuum	Vacuum	Vacuum
OSA/REC	4	No Vacuum	Vacuum	No Vacuum	No Vacuum	No Vacuum	No Vacuum	No Vacuum
Defroster	5	No Vacuum	No Vacuum	No Vacuum	No Vacuum	No Vacuum	No Vacuum	Vacuum
Port 6 not used (sealed in connector)								

E. Vacuum Line - Gray (Source)
F. Vacuum Line - Orange (Defroster)
H. Vacuum Line - Dark Blue (Heat)
I. Vacuum Line - Tan (A/C)
J. Vacuum Line - Black (Defroster)

45. Vacuum Source - Engine
46. Vacuum Tank (Gas)
47. Cowl
48. Plenum Valve

49. Mode Door
50. Defroster Door
51. Recirculator Door
52. Control
53. Actuator

L0257

Figure 25—Vacuum Schematic

DIAGNOSIS OF VACUUM SYSTEM

Start the engine and allow it to idle. Move the selector lever to each position and refer to the vacuum diagrams and operational charts for airflow, air door functioning and vacuum circuits. If air flow is not out of the proper outlet at each selector lever position do the following:

Inspect

1. The hose connections at the vacuum actuators, control head valve and vacuum tank.
2. The vacuum source circuit:
   - Install a vacuum tee and gage (with restrictor) at the vacuum tank outlet. Idle the engine and read the vacuum (a normal vacuum is equivalent to manifold vacuum) at all selector lever positions.
   - Vacuum less than normal at all positions.
     Remove the tee and connect the vacuum gage line to the tank—read the vacuum. If still low, the problem lies in the feed circuit, the feed circuit to the tank or in the tank itself. If vacuum is now normal, the problem lies down-stream.
   - Vacuum less than normal at some positions.
     If vacuum was low at one or several of the selector level positions, a leak is indicated in these circuits.
   - Vacuum normal at all positions.
     If vacuum was normal and even at all positions, the malfunction may be caused by improperly connected or plugged lines or a malfunctioning vacuum valve or valves.

3. Specific vacuum circuit:
   - Place the selector lever in the malfunctioning position and check for vacuum at the pertinent vacuum actuators.
   - If vacuum exists at the actuator but the door does not move, the actuator is malfunctioning or the door is jammed.
   - If low or no vacuum exists at the actuator, determine whether the cause is the vacuum harness or the vacuum valve.
   - Check the vacuum harness first.
4. Vacuum harness circuit:
   - Disconnect the vacuum harness at the control head.
   - The black line should show engine vacuum: if not, trace back through connector to vacuum tank.
   - To check any individual circuit, place the selector lever at the involved circuit position and check for vacuum presence.

EVACUATING AND CHARGING PROCEDURES

Before opening any refrigerant hose or component, read the information provided in:

- Refrigerant-12 Operating Characteristics.
- Evacuating, Adding Oil and Charging Procedures.

Remove sealing caps from subassemblies before making connections for final assembly. Use a small amount of clean 525 viscosity refrigerant oil on all tube and hose joints.

Use new seal (O-ring) dipped in the clean 525 viscosity refrigerant oil when assembling joints. The oil will aid in assembly and help provide a leak-proof joint.

When tightening joints, use a second wrench to hold the stationary part of the connection.

Tighten all tubing connections to specification (figure 9). Insufficient or excessive torque can loose joints or deformed joint parts. Either condition can cause leakage.

REFRIGERANT OIL DISTRIBUTION

- R-4 COMPRESSOR — 177.4 ml (6 ounces). Add new oil during the following component replacement and conditions:

1. With no excessive oil leakage:
   - Compressor — Remove, drain oil, measure, and replace the same amount of new oil plus 29.6 ml (1 ounce).
   - Evaporator — Add 88.7 ml (3 ounces).
   - Condenser — Add 29.6 ml (1 ounce).
   - Accumulator — R-4 Compressor — Remove, drain oil, measure, replace the same amount of new oil plus 59.1 ml (2 ounces) to compensate for that retained by the original accumulator desiccant.
2. With signs of excessive oil leakage:

R-4 COMPRESSOR

Remove the accumulator. Drain, measure and record quantity of oil in accumulator. It is not necessary to remove and drain the R-4 compressor because the compressor only retains a minimum quantity of oil.

- If less than 88.7 ml (3 ounces), add 88.7 ml (3 ounces) of new oil to system.
- If more than 88.7 ml (3 ounces), add the same amount of new oil as drained.
- If a new accumulator is installed to system, add 59.1 ml (2 ounces) additional oil to compensate for that retained by the original accumulator desiccant.

EVACUATING AND CHARGING

Before charging, evacuate the system if Refrigerant-12 is lost or if the system has been opened.

Evacuation and charging is a combined procedure. Purge all gage lines with Refrigerant-12 before charging.

There are two standard Refrigerant-12 evacuate and charge procedures:

- J 23500-01 Charging Station Method
- Drum Method

NOTICE: Do not use alcohol to remove moisture from the system. Alcohol can damage components.

GAGE CALIBRATION

Before evacuation, check the low pressure gage for proper calibration and the vacuum system for proper operation. With the gage is connected from the refrigeration system, be sure that the pointer is centered on "0." Tap the gage to be sure the pointer is not sticking. If necessary, calibrate as follows:

- Remove the cover from the gage.
- Holding the gage pointer adjusting screw with one hand, carefully force the pointer in the proper direction to position the pointer at the "0" position. Tap the gage to be sure the pointer is not sticking. Replacing the gage cover.

VACUUM SYSTEM CHECK

Before connecting the vacuum pump to the A/C system, run the pump connected to the low pressure gage to determine the vacuum pump capability. If the vacuum system is unable to reach 711.2-736.6 mm (28 to 29 inches) or more vacuum, check for leaks. If no leaks are found, check the vacuum pump.

This specification can be reached only at or near seal level. For each 304.8 m (1,000 ft.) above sea level, lower the specification by 3.37 kpa (1" Hg.). For example, at 1524 m (5,000 ft.) elevation, only 77.67-84.42 kPa (23"-24" Hg.) vacuum is required.

Note that when a vacuum pump is used in either of the two methods, it must be able to reach these specifications (94.5-97.9 kPa, 28"-29" Hg., or as adjusted for altitude).

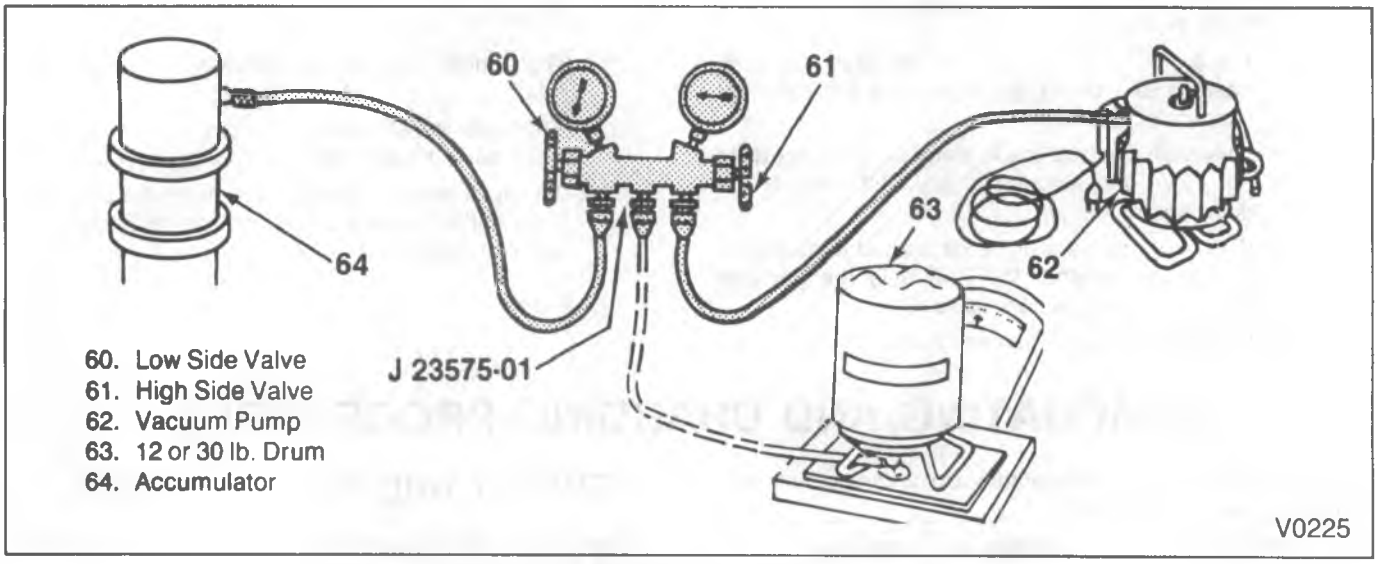

Figure 26 – Charging the System

CHARGING STATION METHOD

Follow the J 23500-01 Charging Station instructions. Use with the following exceptions:

1. Do not connect the high pressure line to the air conditioning system.
2. Keep the high pressure valve on the charging station closed.
3. Perform the evacuate and charge procedure through the accumulator low side pressure service fitting.
4. Following these procedures will prevent high side pressure from damaging the charging station if an error is made during the sequence.

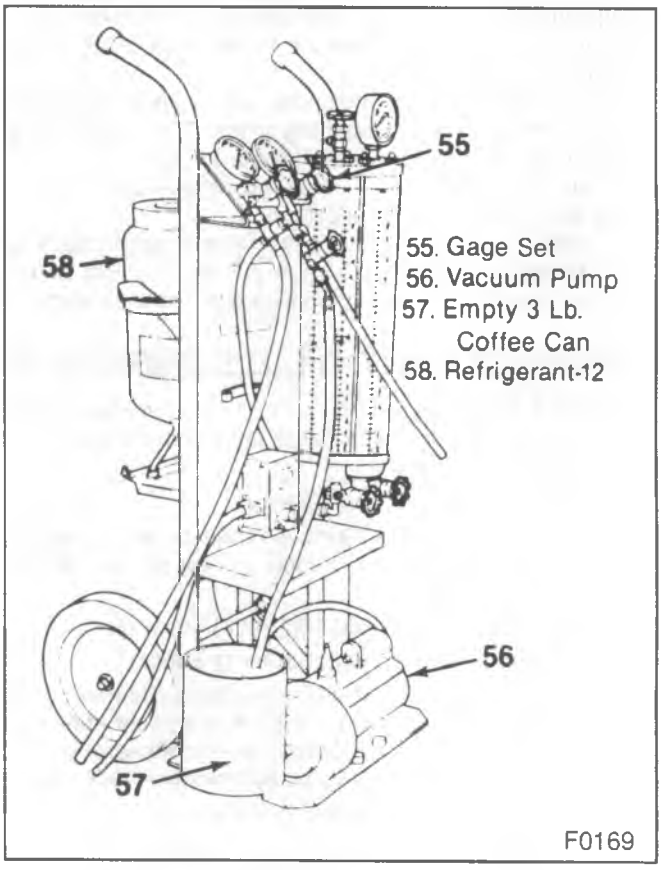

Figure 27 – J 23500-01 Charging Station

REFRIGERANT DRUM METHOD

Tool Required:

- J 23390 Refrigerant Dispensing Valve

1. Use J 23390 for a 5.443 kg (12 lb.) can. A 13.608 kg (30 lb.) can has a built-in opener-valve. Place the drum on a scale and note weight before charging. During charging, watch the scale to determine the amount used.

Important

- Close the outlet valve on the opener (clockwise) before installing the opener to the R-12 container.
- To evacuate the A/C system install J 23575-01 Manifold Gage Set and Vacuum Pump.
- SLOWLY open high and low side gage valves and begin vacuum pump operation. Pump the system until the low side gage reaches 711.2-736.6 mm (28 to 29 inches of mercury [vacuum]) or more.
- The evacuation procedure will specify 711.2-736.6 mm (28 to 29 inches) of mercury at sea level. For each 304.8 m (1,000 ft.) above sea level, lower the specification by one inch of vacuum. At 1524 m (5,000 feet) elevation only 2-609.6 mm (23 to 24 inches) of vacuum is required.
- If the prescribed mercury (vacuum) cannot be reached, close the vacuum control valve, shut off the pump and look for a leak at the connections or the pump.

2. When the gage reaches the prescribed vacuum, the system is evacuated. Close the high side gage set valve and turn OFF the vacuum pump.
3. Watch the low side gage to be sure vacuum holds for five minutes. If the vacuum holds, disconnect the vacuum hose at the gage set and then proceed to charging.
4. If the vacuum does not hold for five minutes charge the system with 0.227 kg. (8 ounces) Refrigerant-12 and leak check. Recover the system again and repair any leaks. Repeat the evacuation procedure.

CHARGING THE SYSTEM

1. Start the engine, run with the choke open (if applicable) and the fast idle speed reduced to normal idle. Set the A/C control lever on OFF.
2. With the drum or 0.397 kg (14 ounce) can(s) inverted, open source valve(s) and allow 0.454 kg (1 pound) or 0.397 kg (14 ounce) can of liquid Refrigerant-12 to enter the system through low side service fitting on accumulator.
3. When one 0.454 kg (1 pound) or one 0.397 kg (14 ounce) can of liquid Refrigerant-12 enters the system, engage the compressor by setting the A/C control lever to NORM and blower speed on HI to draw in the remainder of the charge.

   To speed up the operation, use a fan to pass air over the condenser. If the condenser temperature remains below the charging cylinder temperature, Refrigerant-12 will enter the system faster.
4. Shut off the source valve and run the engine for 30 seconds to clear lines and gages.
5. With the engine running, remove the charging low side hose adapter from the accumulator service fitting. Unscrew rapidly to prevent Refrigerant-12 from escaping.

CAUTION: Never remove a gage line from its adapter when the line is connected to the A/C system. Always remove the line adapter from the service fitting to disconnect a line. Do NOT remove the charging hose at the gage set while it is attached to the accumulator. This will discharge the system because of the depressed schrader valve in service low side fitting. Also, the escaping Refrigerant-12 may cause personal injury.

6. Replace the protective cap on the accumulator fitting.
7. Turn the engine off.
8. Leak test the system with a J 38505 Leak Detector.
9. Start the engine.
10. with the system charged and leak-checked, operate the system and test for pressures as outlined under " System Components Temperature and Pressure Relationship" (figure 8).

ACCUMULATOR ASSEMBLY

The accumulator assembly has a service replacement which includes two seals (O-rings) for the inlet and outlet connections. The desiccant is NOT serviced separately — it is part of the sealed accumulator assembly. Refer to CCOT Refrigerant Oil and Distribution for presence of refrigerant oil and service conditions when removing the accumulator from the vehicle to measure the oil.

Replace the accumulator assembly when:

1. A physical perforation produces a leak.
2. The (orifice) screen experiences continued or repeated plugging.
3. An evaporator fails because of internal corrosion.

It is not necessary to replace the accumulator assembly when:

1. A dent is found in the outer shell of the accumulator.
2. A vehicle is involved in a collision and there is no perforation to the accumulator. Cap or place a plastic bag around an open refrigerant line.

DIAGNOSIS OF SPECIFIC COMPONENTS

COMPRESSOR

Compressor defects can appear as noise, seizures, leakage or low discharge pressures.

NOTICE: Resonant compressor noises are normal; however, irregular noise or rattles may indicate broken parts or wear. To check seizure, de-energize the magnetic clutch and rotate the drive plate. If rotation is impossible, the compressor is seized.

To check for a leak, refer to "Leak Testing The Refrigerant System." A worn or damaged internal seal, a restriction or an insufficient refrigerant charge can cause a low discharge pressure. Check before servicing.

CONDENSER

A condenser may leak or be restricted. A restriction will cause excessive compressor discharge pressure. If a partial restriction is present, ice or frost will form downstream of the restriction as the refrigerant expands after passing through the restriction.

Airflow restrictions through the condenser or radiator can cause high discharge pressures. During normal condenser operation, the outlet pipe will be cooler than the inlet pipe.

EXPANSION VALVE

There are five expansion valve malfunctions: valve stuck open, valve stuck closed, broken power element, a restricted screen and an improperly located or installed power element bulb. To correct the first three conditions, replace the valve; to correct the last two, replace the valve inlet screen and properly install a power element bulb.

Operating the system will indicate valve trouble.

1. Valve stuck open
   - Noisy compressor.
   - No cooling – freeze up.
2. Valve stuck closed, broken power element or plugged screen.
   - Very low suction pressure.
   - No cooling.
3. Poorly located power element bulb.
   - Normal pressure.
   - Poor cooling.

DIAGNOSIS FOR MALFUNCTIONING VALVE

Use the following procedure to identify a malfunctioning valve.

1. Operate the system at normal idle. If the valve is malfunctioning, the low pressure readings (evaporator pressure) will be above specifications (figure 8).
2. The loss of system performance is not as evident when the compressor head pressure is below 1379 kPa (200psi). Increase the system head pressure by partially blocking the condenser. Disconnect the blower lead wire and operate the system to determine if the evaporator pressure can be obtained.

EVAPORATOR

An inadequate supply of cool air can cause the evaporator to malfunction. Check for a plugged core, a cracked case or a leaking seal.

REFRIGERANT LINE RESTRICTIONS

There are three types of refrigerant line restrictions:

1. Suction Line – A restriction will cause low pressure at the compressor, low discharge pressure and little or no cooling.
2. Discharge Line – A restriction will cause the pressure relief valve to open.
3. Liquid Line – A restriction will be caused by low discharge and suction pressure, and insufficient cooling.

ON-VEHICLE SERVICE

FILTER INSTALLATION

- Discharge the system of Refrigerant-12. Refer to " Evacuating, Adding Oil and Charging Procedures."

1. Locate an area of refrigerant liquid line between the condenser and the orifice tube.
2. Cut out a section of liquid line one inch less than the length of the filter with a tubing cutter.
3. Wedge a small cloth ball into both ends of the cut to prevent debris from entering the system.
4. File away the external burr.
5. Cut out the internal burr.
6. Remove the cloth balls and any debris from the line ends.
7. Place the nut over the condenser end of the liquid line (figure 28).
8. Install the ferrule with the small end toward the nut (figure 28).
9. Remove the seal (O-ring) from the inlet side of the filter (if equipped). Lubricate the seal with clean refrigerant oil and insert the tube into the compression fitting until it bottoms out when tightened.

Tighten

- Nut. Refer to figure 9.

10. Place the nut over the orifice end of the liquid line (figure 28).
11. Install the ferrule with the small end toward the nut (figure 28).
12. Remove the seal (O-ring) from the outlet side of the filter (if equipped). Lubricate the seal with refrigerant oil and insert the tube into the compression fitting of the filter until it bottoms out when tightened.

Tighten

- Nut. Refer to figure 9.

13. Reform the line. Do not crush or deform, as this may cause a restriction.
14. If the filter is installed in a location where it may touch another component, wrap the filter in closed cell foam rubber to protect it from being damaged.
    - Charge the system and leak test. Refer to "Refrigerant Recovery and Recycling, Adding Oil, Evacuating and Charging Procedures" in this section.

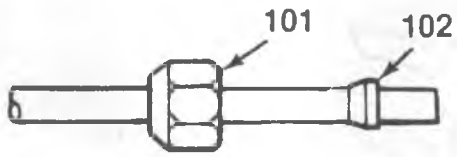

101. Nut
102. Ferrule

F5214

Figure 28—In-Line Filter Installation

COMPRESSOR REPLACEMENT (R/V)

Remove or Disconnect (Figures 29 through 32)

1. Battery negative cable.
2. Compressor belt.
3. Refrigerant from the system.
4. Hose plate attaching bolt (2) and washer.
5. Hose plate.
    - Cap or plug open connections.
6. Electrical lead to the clutch actuating coil.
7. Mounting bracket bolts and nuts.
8. Compressor.
    - Drain and measure the oil.
    - Check for contamination.

Install or Connect (Figures 29 through 32)

1. Oil to the compressor.

Important

- Replace with fresh oil. If the system was serviced, install a full, fresh charge of refrigerant oil. Refer to chart on page 1B-7.

2. Compressor.
    - Position to the mounting bracket.
3. Mounting bracket nuts and bolts.

NOTICE: See "Notice" on page 1B-1 of this section.

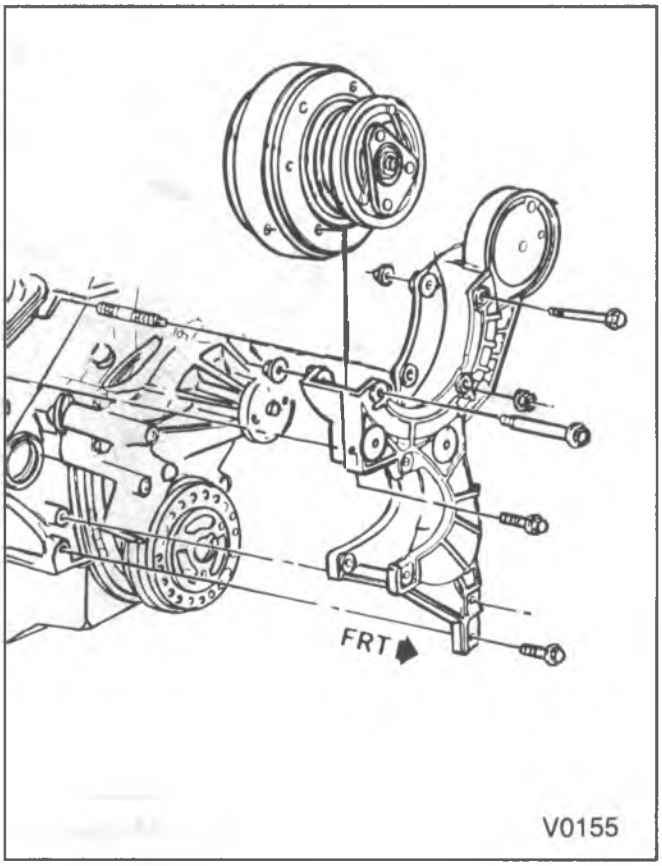

V0155

Figure 29—R/V Compressor Installation—5.7L Engine

4. Hose plate connector to the rear of the compressor.

Important

- Use new seals (O-rings) coated with clean refrigerant oil.

Tighten

- Bolt to 33 N•m (24 lb. ft.).

5. Electrical lead to the coil.
6. Compressor belt.
7. Battery negative cable.

Adjust

- Belt. Refer to ENGINE COOLING (SEC. 6B1).

8. Evacuate, charge and check the system.

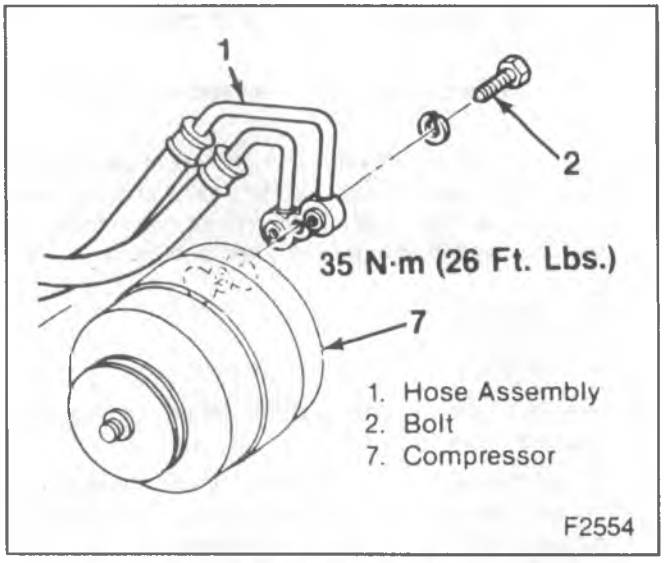

Figure 30 – Hose Plate and Bolt Removal

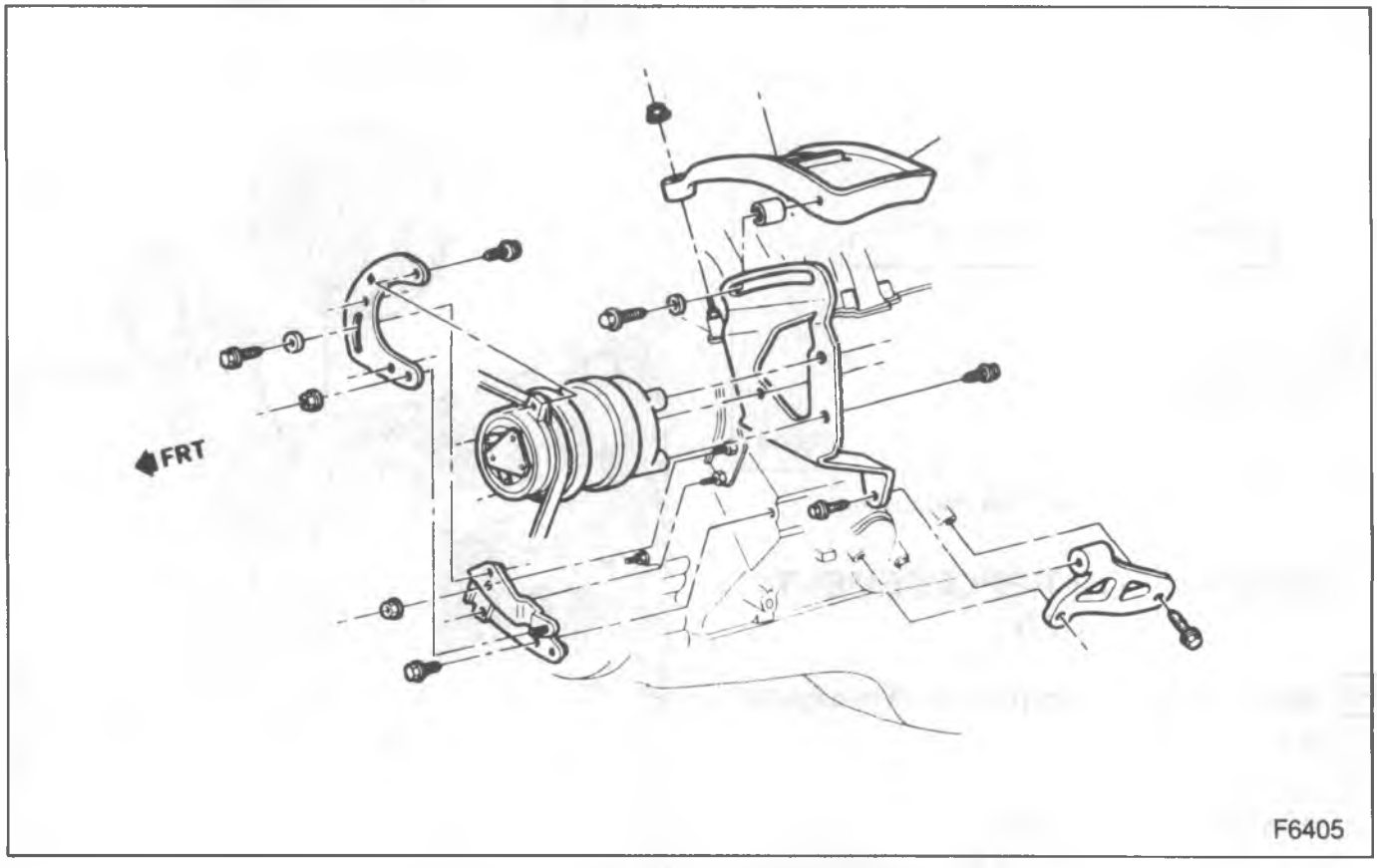

Figure 31 – R/V Compressor Installation (6.2L Engine)

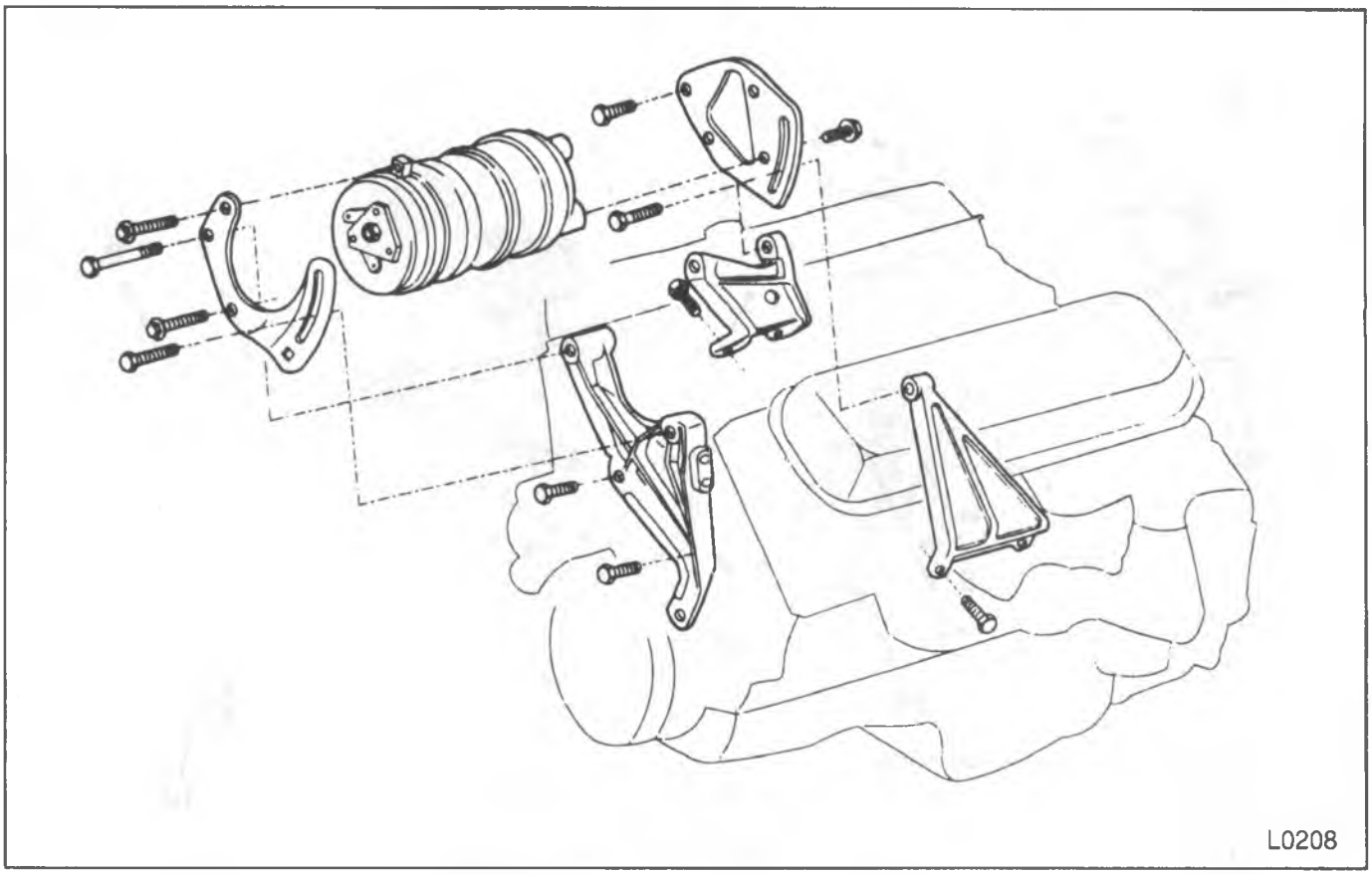

Figure 32 – R/V Compressor Installation – 7.4L Engine

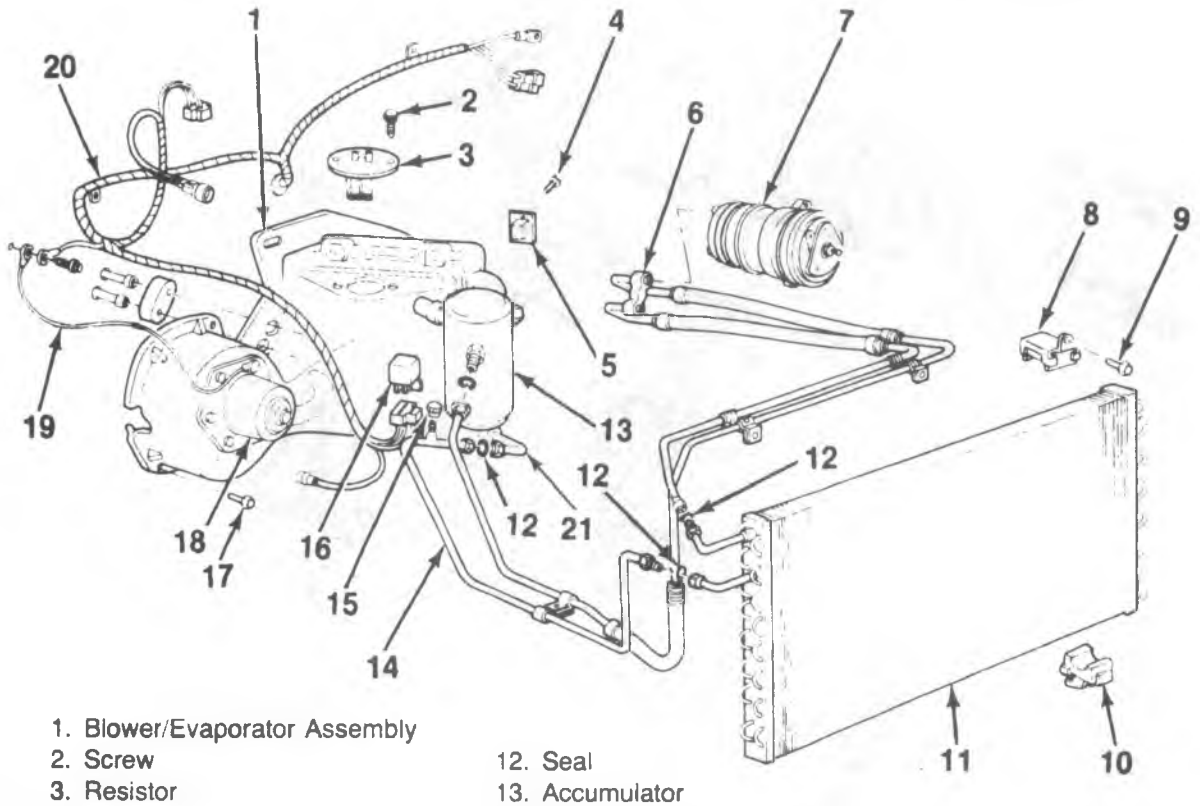

1. Blower/Evaporator Assembly
2. Screw
3. Resistor
4. Screw
5. Auxiliary Resistor
6. Hose Connector
7. Compressor
8. Upper Retainer
9. Screw
10. Lower Retainer
11. Condenser
12. Seal
13. Accumulator
14. Refrigerant Line
15. Cap
16. Relay
17. Bolt
18. Blower Motor And Fan Assembly
19. Ground Wire
20. Wiring Harness
21. Evaporator Inlet

L1033

Figure 33—Air Conditioning System Component View—R/V

A/C SYSTEM — R/V SERIES

CONDENSER REPLACEMENT

Remove or Disconnect (Figures 30 though 34)

1. Negative battery cable.
2. Discharge A/C system.
3. Fan.
4. Fan shroud.
5. Radiator mounting bolts.
   - Position radiator rearward.
6. Condenser refrigerant lines (figure 30).

Important

- Cap or plug all open connections.

7. Condenser to radiator support screws (figure 31).
8. Condenser assembly.

Install or Connect (Figures 30 through 34)

1. New condenser.

Important

- Add 30 ml (1 ounce) of clean refrigerant oil to a new condenser.

2. Condenser to radiator support screws.
3. Condenser refrigerant lines.
4. Radiator mounting bolts.
5. Fan shroud.
6. Fan.
7. Charge A/C system.
8. Negative battery cable.

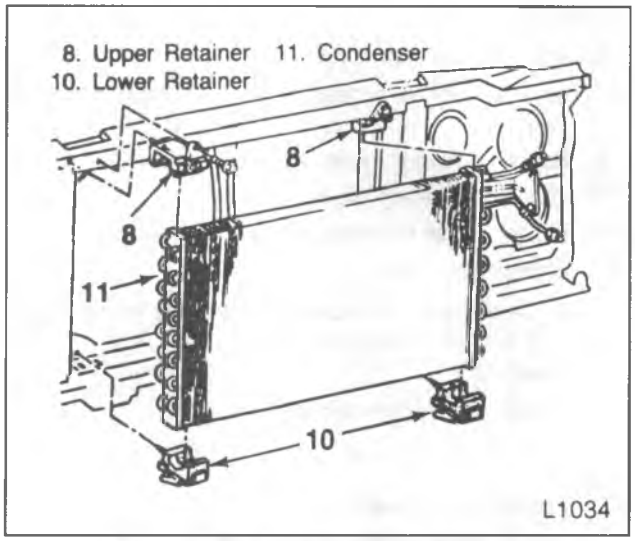

Figure 34 – Condenser Replacement

ACCUMULATOR REPLACEMENT

Remove or Disconnect (Figures 33 and 34)

1. Battery ground cable.
2. Cycling pressure switch.
3. Refrigerant from the system.
4. Refrigerant lines.

Important

- Cap or plug open connections.

5. Bracket screws.
6. Accumulator (13).

Important

- Drain excess refrigerant oil into a clean container. Measure and add new oil.

Install or Connect (Figures 33 and 34)

1. New accumulator.

Important

- Add 59.1 ml (two ounces) of clean refrigerant oil, PLUS an amount equal to that drained.

2. Bracket screws.
3. Inlet and outlet lines.
4. Cycling pressure switch.
5. Battery ground cable.
   - Evacuate, charge and check the system.

BLOWER ASSEMBLY REPLACEMENT

Remove or Disconnect (Figures 33 through 36)

1. Battery ground cable.
2. Insulator (figure 36).
3. Blower motor lead and ground wires (134).
4. Blower motor cooling tube (133).
5. Case attaching screws.

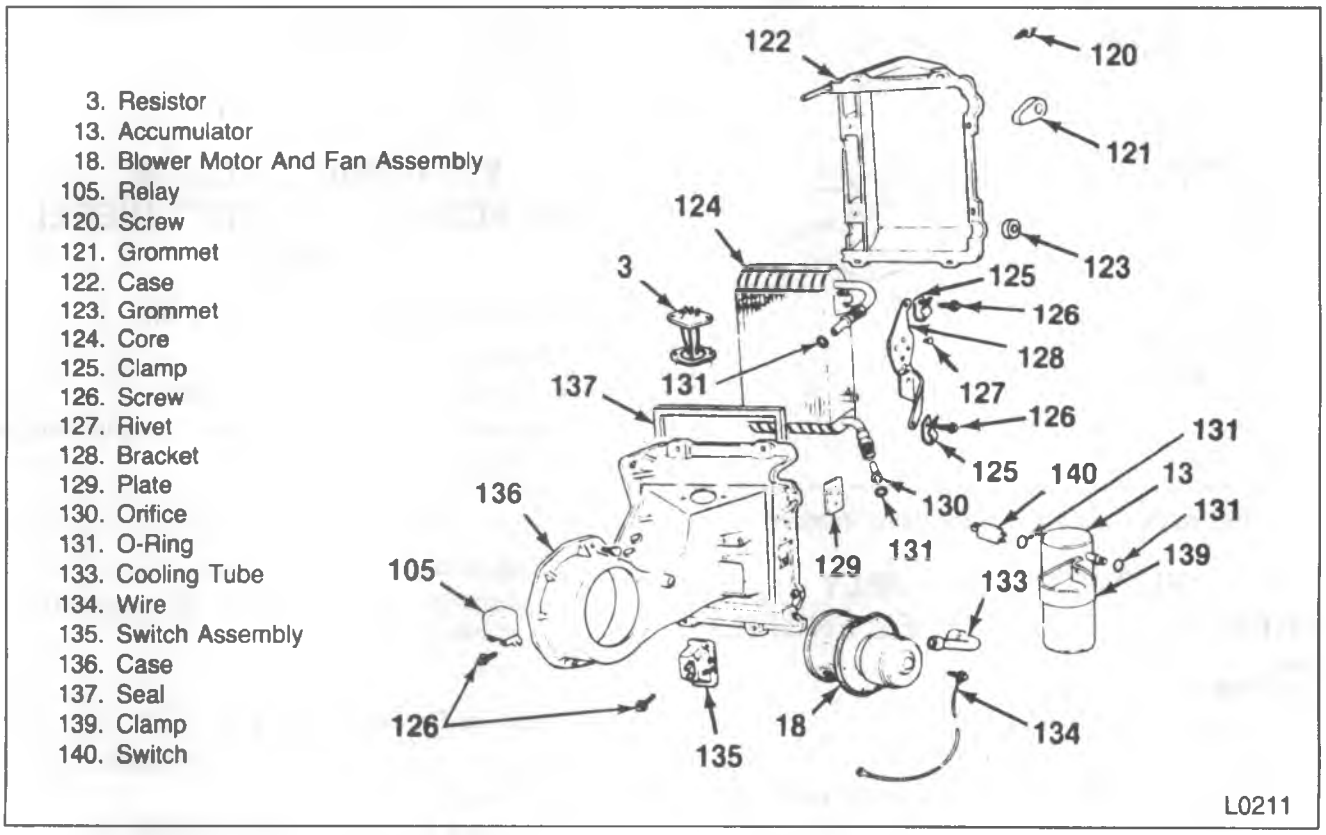

Figure 35 – Evaporator and Blower Assembly

6. Blower assembly.
   - Carefully pry the blower flange away from the case if the sealer acts as an adhesive.
7. Shaft nut.
8. Blower wheel from motor shaft.
   - Remove shaft nut.

Install or Connect (Figures 33 through 36)

1. Blower wheel to the motor shaft.
2. Shaft nut.
3. Blower assembly.
   - Use a new bead of permagum sealer on the flange.
4. Blower motor cooling tube (133).
5. Blower motor lead and ground wires (134).
6. Insulator (figure 36).
7. Battery ground cable.

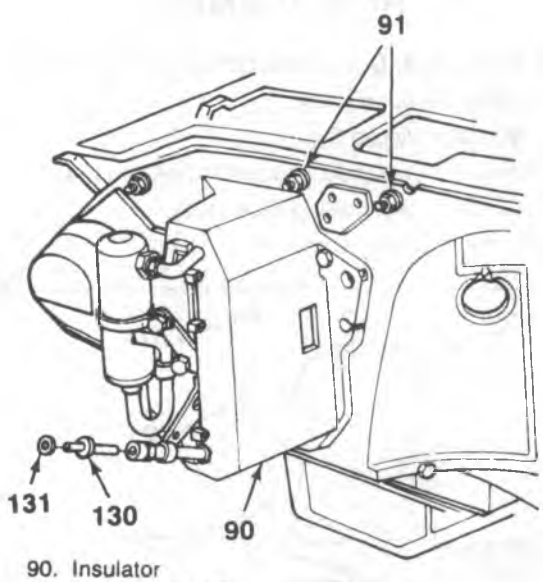

90. Insulator
91. Studs with Nuts
130. Expansion Tube
131. O-ring

F6406

Figure 36—Dash Panel Insulator Removal

BLOWER ASSEMBLY REPLACEMENT (DIESEL ENGINE)

Remove or Disconnect

1. Blower motor resistor.
2. Motor relay.
3. Drain coolant. Refer to MAINTENANCE AND LUBRICATION (SEC. 0B).
4. Heater hoses from heater core.
5. Fuel filter.
6. Top insulator mounting nuts.
7. Inner fender to access bottom insulator mounting nuts.
8. Bottom insulator mounting nuts.
9. Insulator covering blower motor.
10. Blower motor mounting screws.
11. Blower assembly.
    - Carefully pry the blower flange away from the case if the sealer acts as an adhesive.
12. Shaft nut.
13. Blower wheel from motor shaft.
    - Remove shaft nut.

Install or Connect

1. Blower wheel to the motor shaft.
2. Shaft nut.
3. Blower assembly.
   - Use a new bead of permagum sealer on the flange.
4. Blower motor mounting screws.
5. Insulator covering blower motor.
6. Bottom insulator mounting nuts.
7. Inner fender.
8. Top insulator mounting nuts.
9. Fuel filter.
10. Heater hoses.
11. Refill coolant. Refer to MAINTENANCE AND LUBRICATION (SEC. 0B).
12. Motor relay.
13. Blower motor resistor.

EVAPORATOR CORE REPLACEMENT (EXCEPT DIESEL ENGINES)

Remove or Disconnect (Figure 34)

1. Battery ground cable.
   - Recover the R-12 from the system.
2. Nuts from the selector duct studs projecting through the dash panel.
3. Evaporator case cover (122).
4. Inlet and outlet lines.
   - Cap or plug open connections.
5. Expansion tube. Refer to "Orifice (Expansion Tube) Replacement" in this section.
6. Evaporator core assembly.

Install or Connect (Figure 34)

- Add 88.7 ml (3 ounces) of clean refrigerant oil.

1. New core.
2. Eight bolts that hold the case together and to the bulkhead.

3. Orifice tube.
4. Liquid (orifice tube) line to evaporator.
5. Liquid line support screw.
6. Accumulator.
7. battery cable.
   - Evacuate, charge and check the system.

EVAPORATOR CORE REPLACEMENT (DIESEL ENGINE)

Remove or Disconnect (Figures 34 and 36)

1. Battery ground cable.
   - Recover the R-12 from the system.
   - Drain the cooling system.
2. Air cleaner and resonator.
3. Accumulator.
   - Cap or plug open lines.
4. Fuel filter from the bulkhead and set to the side.
5. Relay and resistor(s) from case.
6. Heater hoses from heater core.
7. Inner fender well bolts, including the jack assembly, lower the fender slightly.
8. Nuts (two) from studs in the bulkhead at the top of the insulator.
9. One screw in the bottom of the insulator.
10. Liquid line retaining bolt.
11. Liquid (orifice tube) line from evaporator, and orifice tube.
12. Insulator cover from evaporator.
13. Eight bolts holding the evaporator case together, two in the bulkhead and separate the case, remove evaporator.

Install or Connect (Figures 34 and 36)

1. New core.
   - Add 88.7 ml (3 ounces) of clean refrigerant oil.
2. Orifice tube.
3. Eight bolts that hold the case together and to the bulkhead.
4. Insulator cover over the evaporator case.
5. Liquid (orifice tube) line to evaporator, and retaining bolt.
6. Two nuts and one screw that holds the insulator to the bulkhead.
7. Inner tender well bolts and jack assembly.
8. Heater hoses.
9. Relay and resister(s).
10. Fuel filter.
11. Accumulator.
12. Air cleaner and resonator.
13. Battery ground cable.
   - Fill cooling system.
   - Evacuate, charge and check the system.

ORIFICE (EXPANSION TUBE) REPLACEMENT

The expansion tube is located in the evaporator core inlet line.

Remove or Disconnect (Figures 3, 33 and 36)

- Recover the R-12 from the system.
1. Condenser-to-evaporator line at the evaporator inlet (21).
   - Cap or plug the open line.
2. Expansion tube from the evaporator core inlet line.
   - Use needle-nose pliers to remove the orifice (130).
3. Expansion tube seal (O-ring) (12) from the core inlet line.

Install or Connect (Figures 3, 33 and 36)

1. Expansion tube seal (O-ring) (12) to core inlet line (21).
   - Use new seal (O-ring) coated with clean refrigerant oil.
   - Insert the short screen and end of the orifice into the evaporator inlet line.
2. Expansion tube to the evaporator core inlet line.
3. Condenser-to-evaporator line at the evaporator inlet (21).
- Evacuate, charge and check the system.

DEFROSTER DUCT AND HEATER CORE REPLACEMENT

Remove or Disconnect (Figures 37 and 38)

1. Battery ground cable.
   - Drain the radiator.
2. Heater hoses from the core tubes (148) (figure 39).
   - Plug the core tubes to prevent spillage.
3. Instrument panel compartment and door.
4. Center duct from the defroster outlet duct (200) (figure 38).
5. Center lower air distributor (189) and center air outlet (186) ducts.
6. Temperature door cable.
7. Nuts from the three selector duct studs that project into the dash panel.
8. Defroster outlet duct-to-dash panel screw (inside the vehicle).
9. Defroster outlet duct assembly (200).
   - Pull rearward until the core tubes clear the dash panel.
   - Lower the defroster duct assembly to reach the vacuum and electrical harness.
10. Vacuum and electrical harness.
11. Core mounting strap screws (150) and strap (149).
12. Core (148).

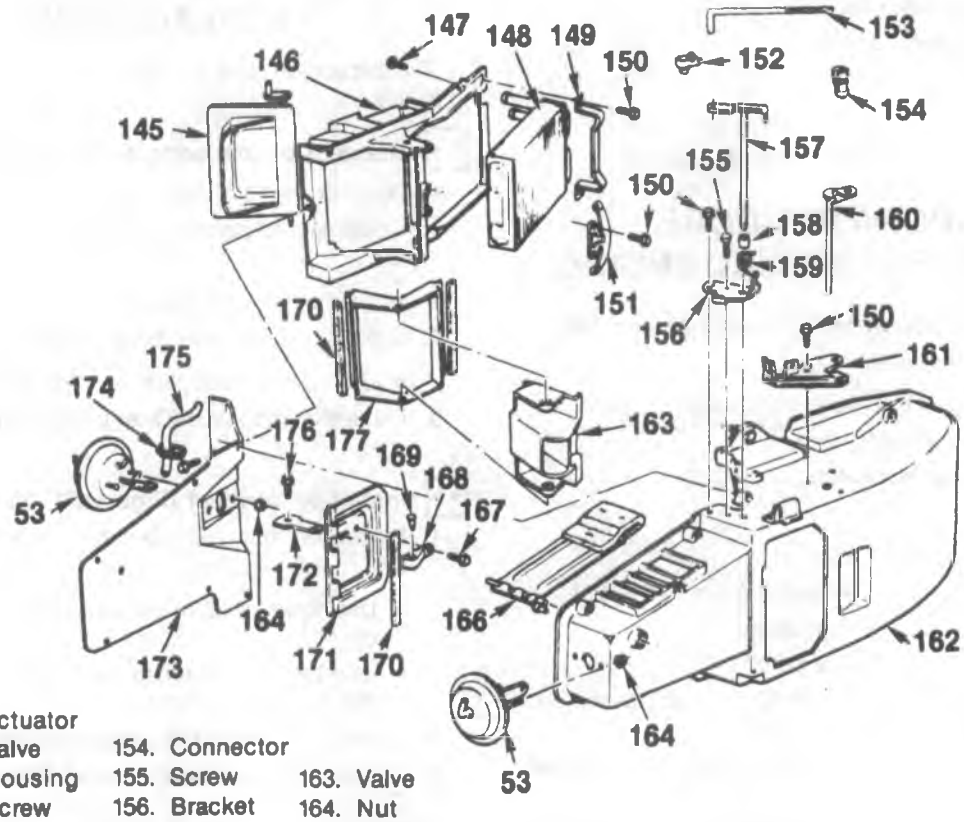

53. Actuator
145. Valve
146. Housing
147. Screw
148. Core
149. Strap
150. Screw
151. Clamp
152. Connector
153. Link
154. Connector
155. Screw
156. Bracket
157. Shaft
158. Spacer
159. Spring
160. Shaft
161. Bracket
162. Case
163. Valve
164. Nut
166. Valve
167. Screw
168. Link
169. Pin
170. Seal
171. Valve
172. Connector
173. Plate
174. Grommet
175. Hose
176. Screw
177. Yoke

L1206

Figure 37 – Air Conditioning and Heater Component View

Install or Connect (Figures 37 and 38)

1. Core (148).
2. Core mounting strap (149) and strap screws (150).
3. Vacuum and electrical harnesses.
4. Defroster outlet duct assembly (200).
5. Temperature door cable.
6. Center lower air distributor (189) and center air outlet (186) ducts.
7. Center lower air distributor duct (189) to defroster outlet duct (200).
8. Instrument panel bar and door.
   - Refer to INSTRUMENT PANEL AND GAGES (SEC. 8C).
9. Heater hoses.
10. Coolant to the radiator.
11. Battery ground cable.

Adjust

Temperature door cable. Refer to "Temperature Door Cable Adjustment" in this section.

ACTUATOR – PLENUM SIDE VENT REPLACEMENT

Remove or Disconnect (Figure 39)

1. Vacuum hose at the actuator.
2. Valve return spring (216) at the actuator end.
3. Actuator bracket mounting screws (215).
4. Cam-to-actuator arm screw (221).
5. Actuator and bracket from the cam (213).
6. Actuator to bracket nuts (214).
7. Actuator (53) from the bracket.

Install or Connect (Figure 39)

1. Actuator (53) to the bracket.
2. Bracket nuts (214).
3. Actuator (211) and bracket to the cam (213).
4. Cam-to-actuator arm screw (221).
5. Actuator bracket mounting screws (215).
6. Valve return spring (216) at the actuator end.
7. Vacuum hose to the actuator.

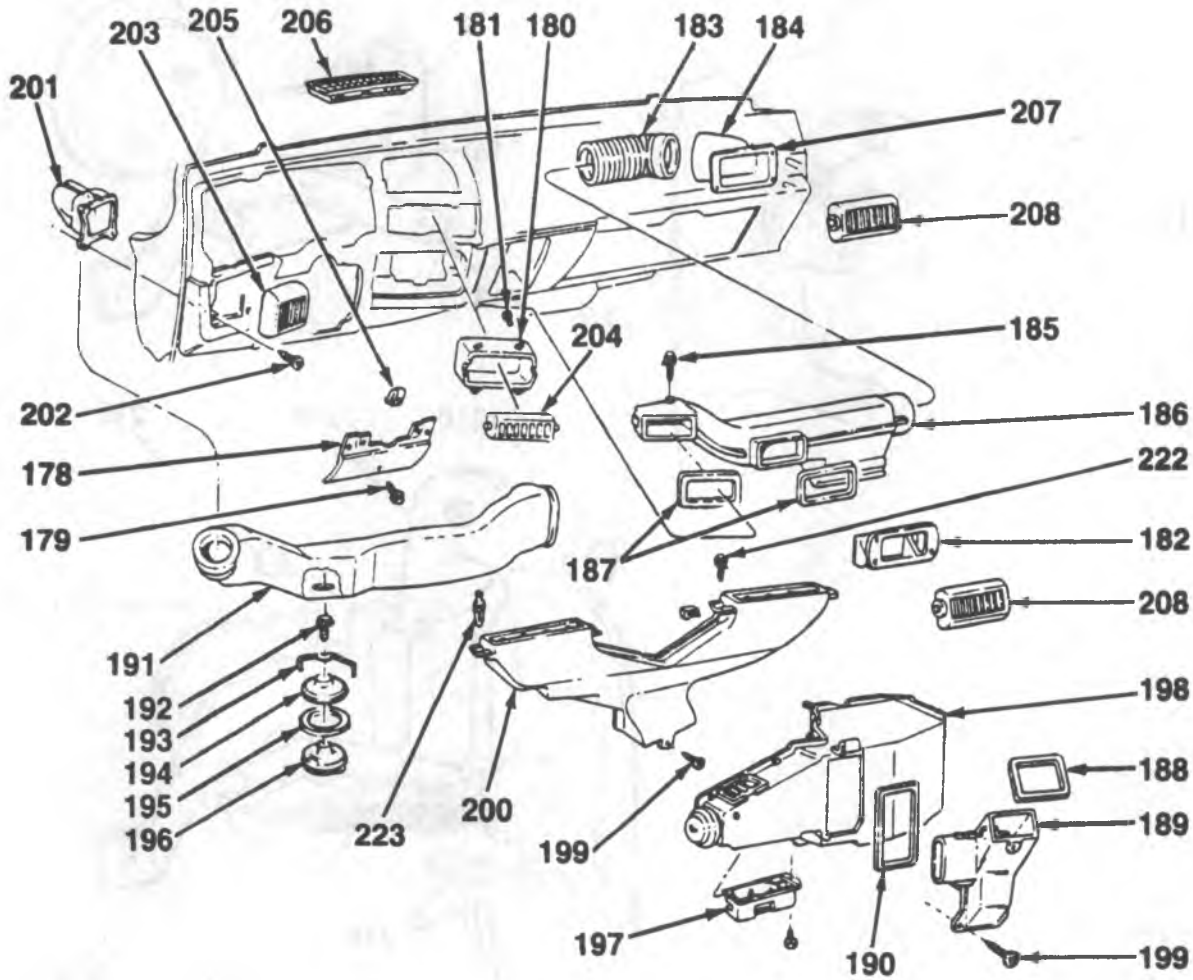

178. Steering Column Lower Cover
179. Screw
180. Center Air Duct Adapter
181. Screw
182. Center Air Outlet Adapter
183. Hose
184. Right Duct Assembly
185. Screw
186. Center Air Outlet Duct Assembly
187. Seal
188. Seal
189. Lower Air Distributor Duct Assembly
190. Seal
191. Left Duct Assembly
192. Screw
193. Retainer
194. Adapter
195. Felt
196. Deflector
197. Heater Air Outlet
198. Heater Case Assembly
199. Bolt
200. Defroster Outlet Duct Assembly
201. Left Outlet Assembly
202. Screw
203. Deflector
204. Deflector
205. U-Nut
206. Defroster Grille
207. Seal
208. Outer Air Deflector
222. Screw
223. Retainer

L1036

Figure 38 – Duct Assembly Component View

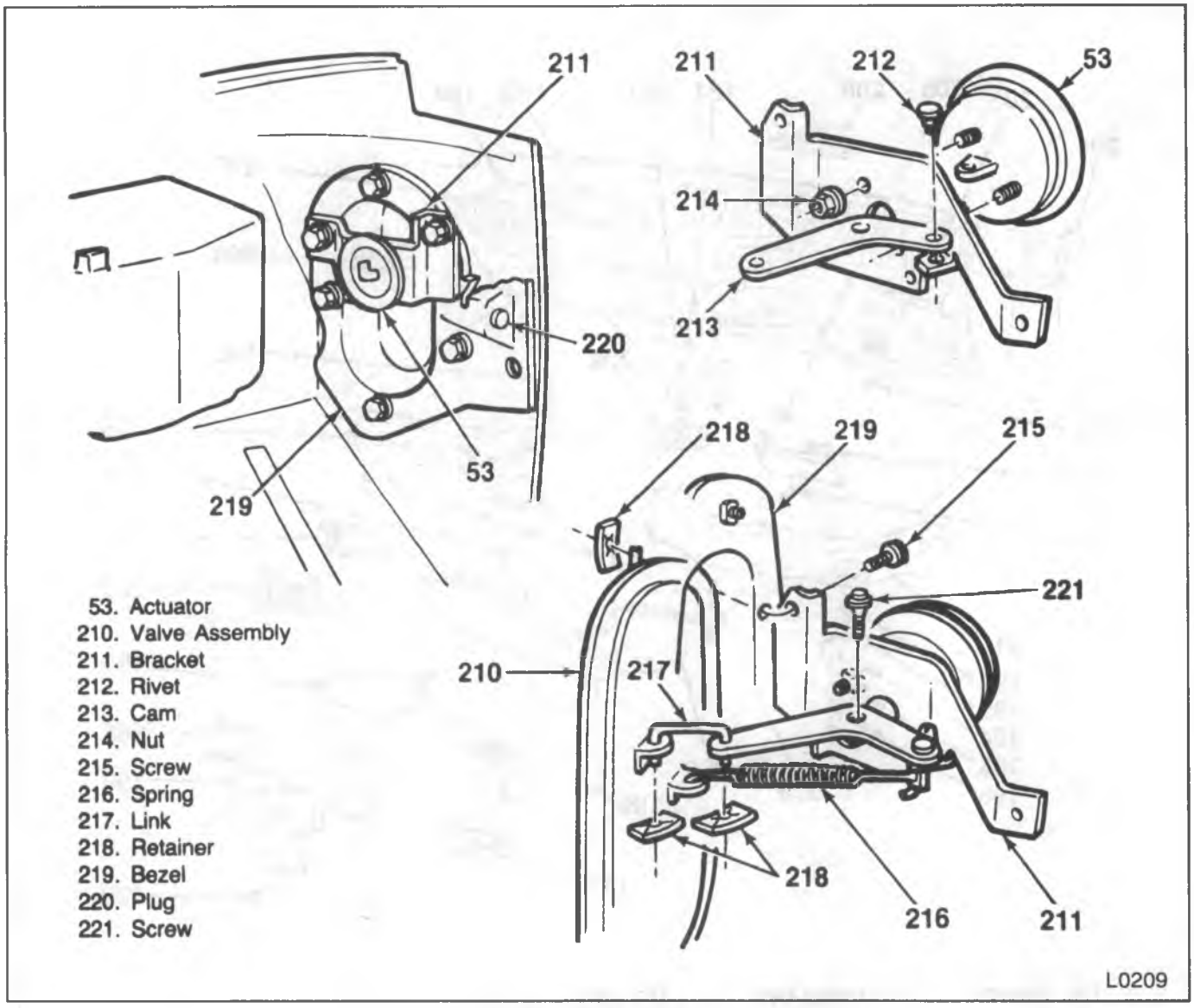

Figure 39 – Actuator – Plenum Side Vent

PLENUM VALVE REPLACEMENT

Remove or Disconnect (Figure 40)

1. Cowl plastic grille.
2. Three cowl-to-valve assembly screws (226).
3. Valve and actuator assembly from the vehicle.
4. Actuator arm pushnut.
5. Actuator-to-valve nuts.

- Separate the valve and actuator.

Install or Connect (Figure 40)

1. Actuator-to-valve nuts.
2. Actuator arm pushnut.
3. Valve and actuator assembly to the vehicle.
4. Three cowl-to-valve assembly screws (226).
5. Cowl plastic grille.

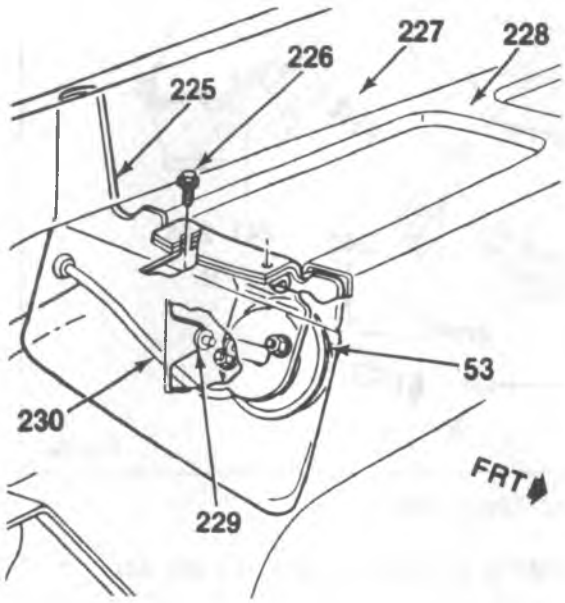

53. Actuator
225. Valve Assembly
226. Screw
227. Windshield Frame
228. Dash And Cowl Panel
229. Retainer And Pin
230. Vacuum Control Hose

L1037

Figure 40 – Plenum Air Inlet Door

CONTROL ASSEMBLY REPLACEMENT

Remove or Disconnect (Figure 41)

1. Battery ground cable.
2. Lower steering column bezel.
3. Instrument panel bezel.
4. Control from the dash.
   - Lower the control to gain access to the back of the control assembly.

Important

- Do not kink the cable.

5. Cable (236).
6. Vacuum harness hose.
7. Electrical harness connector.
8. Control.
9. Switch.

Install or Connect (Figure 41)

1. Fan switch to the new control.
2. Electrical harness.
3. Vacuum harness.
4. Cable (236).
5. Control to dash.
6. Instrument panel bezel.
7. Lower steering column bezel.
8. Battery ground cable.

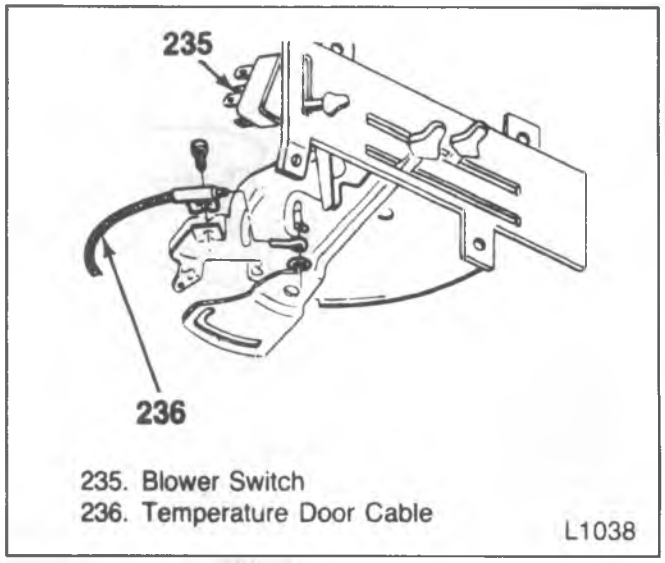

235. Blower Switch
236. Temperature Door Cable

L1038

Figure 41 – Control Assembly Replacement

TEMPERATURE DOOR CABLE ADJUSTMENT

Adjust (Figure 42)

1. Remove instrument panel compartment and door.
2. Loosen the cable attaching bolt (241) at the heater case assembly.
   - Make sure the cable is installed in the bracket on the defroster duct assembly.
3. Place the temperature lever in full COLD position and hold while tightening the cable attaching screw.
4. Install instrument panel compartment and door.

BLOWER SWITCH REPLACEMENT

The blower switch is located on the rear of the control assembly.

Remove or Disconnect (Figure 41)

1. Control assembly. Refer to "Control Assembly Replacement" in this section.
2. Switch-to-control screws.
3. Switch (235).

Install or Connect (Figure 41)

1. Switch (235).
2. Switch-to-control screws.
3. Control assembly. Refer to "Control Assembly

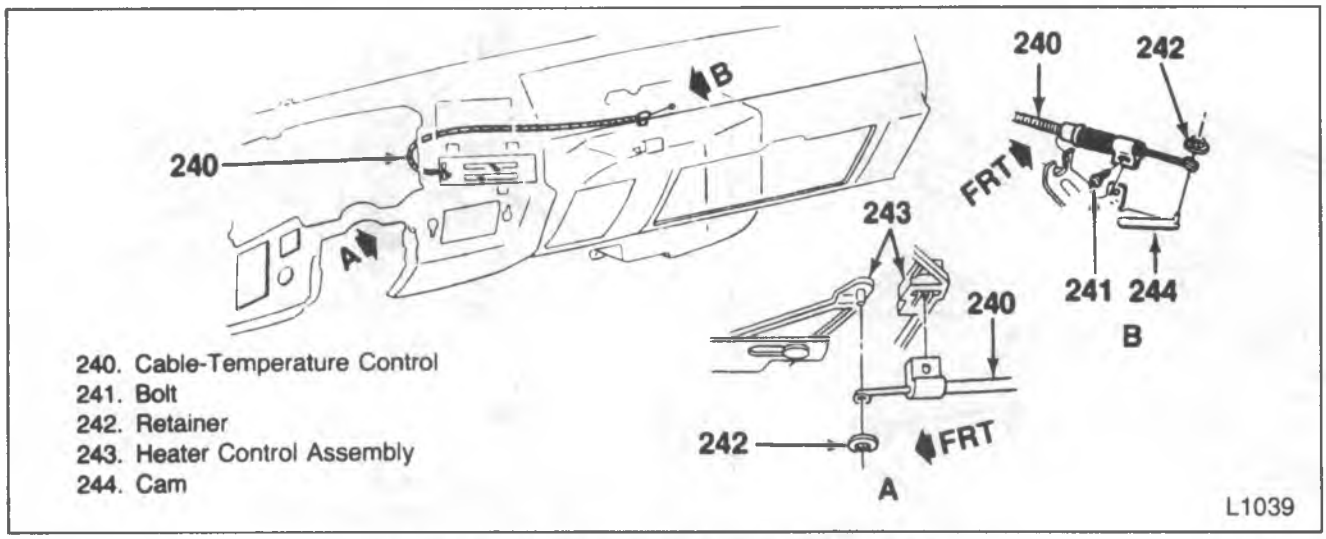

Figure 42 – Temperature Door Cable Adjustment

Replacement" in this section.

VACUUM TANK REPLACEMENT

The vacuum tank is mounted to the cowl behind the left front fender.

Remove or Disconnect (Figures 43 and 44)

1. Vacuum lines at the tank.
2. Tank-to-dash panel screws.
3. Tank.

Install or Connect (Figures 43 and 44)

1. Tank.
2. Tank-to-dash panel screws.
3. Vacuum lines to the tank.

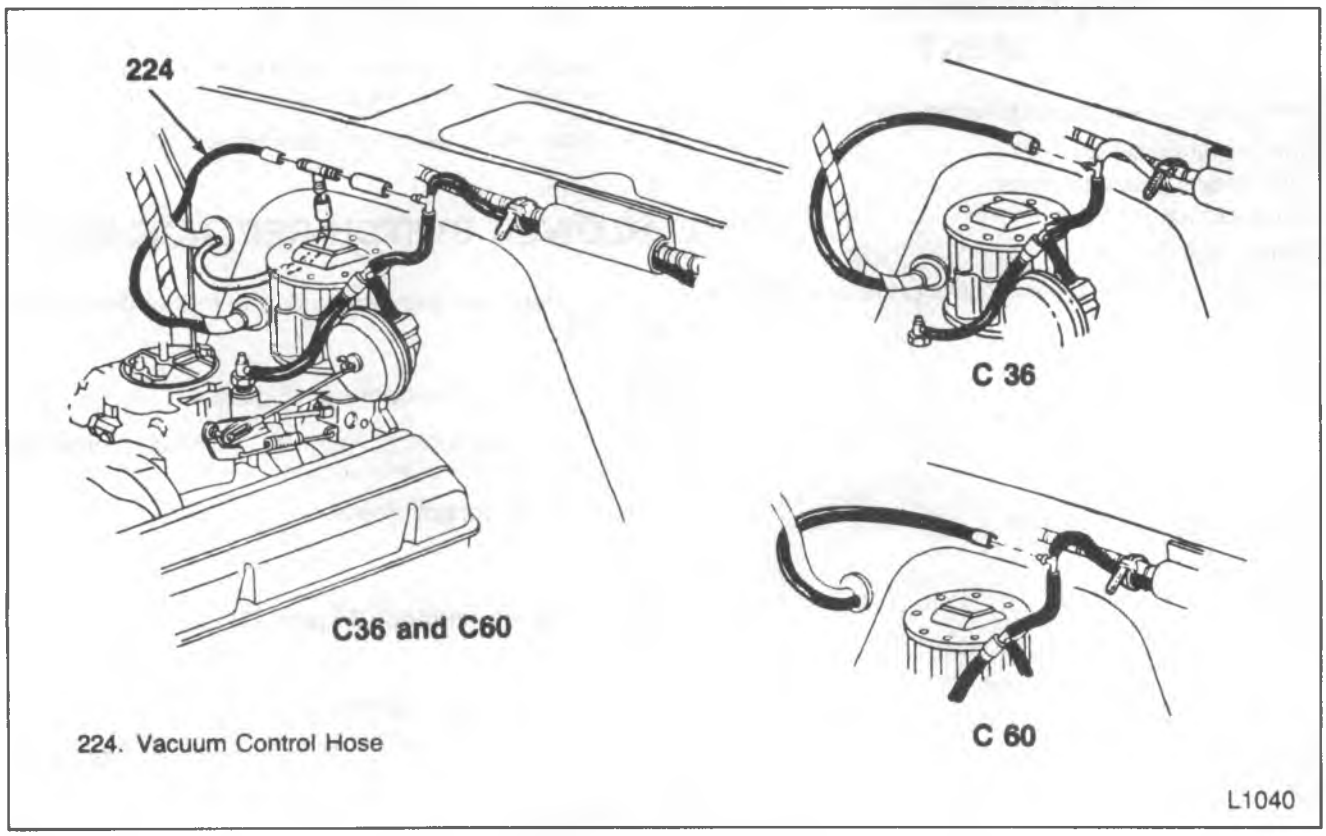

Figure 43 – Vacuum Hose – 5.7L and 7.4L Engine

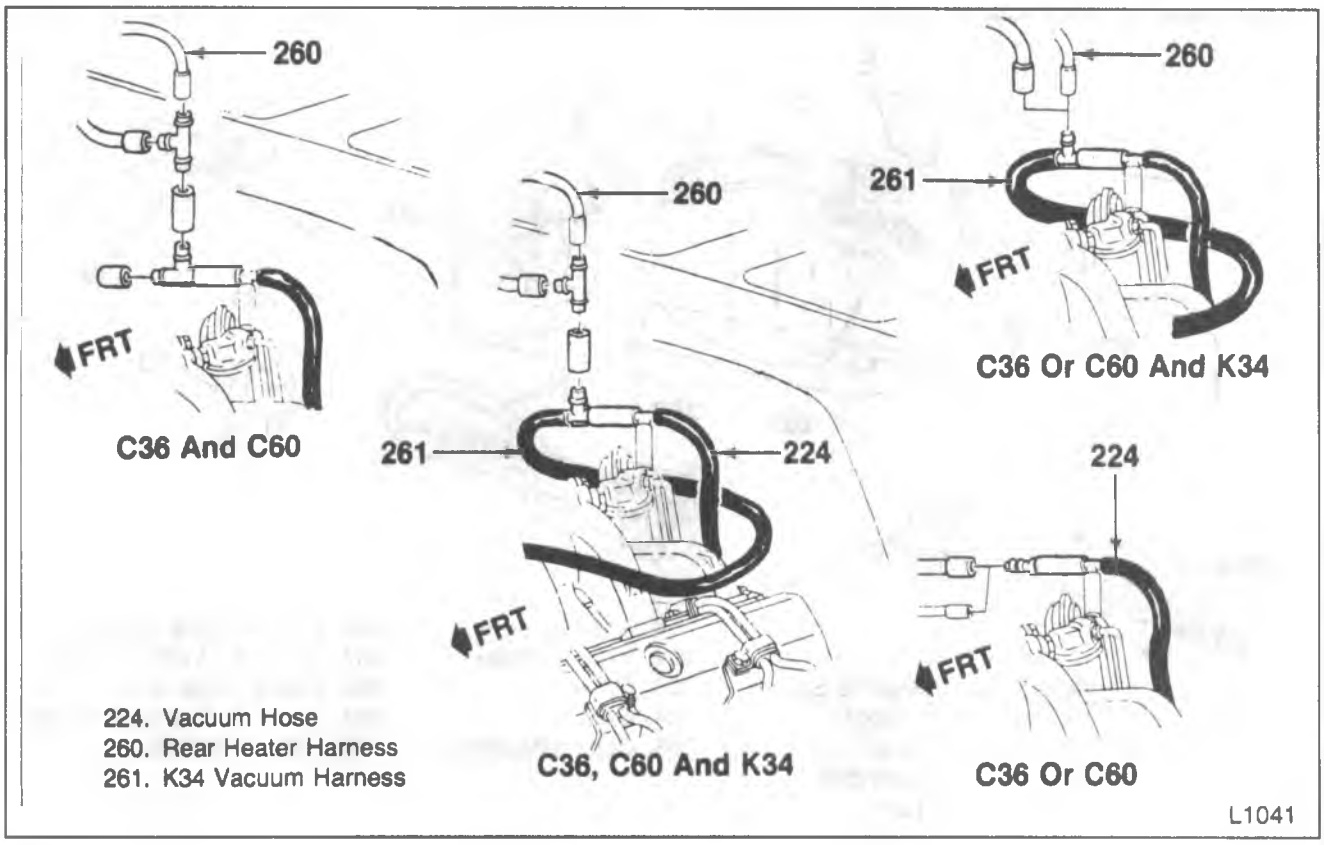

Figure 44 – Vacuum Hose – 6.2L Engine

BLOWER MOTOR RESISTOR REPLACEMENT

The blower motor resistor is located in the blower side of the blower-evaporator case.

Remove or Disconnect (Figure 33)

1. Wiring harness connector from the resistor.
2. Resistor-to-case attaching screws.
3. Resistor (3).

Install or Connect (Figure 33)

1. Resistor (3).
2. Screws.
3. Wiring harness.

BLOWER MOTOR RELAY REPLACEMENT

The blower motor relay is located on the blower side of the blower-evaporator case.

Remove or Disconnect (Figure 33)

1. Wiring harness at the relay.
2. Attaching screws.
3. Relay (16).

Install or Connect (Figure 33)

1. Relay (16).
2. Mounting screws.
3. Wiring harness.

FUSE REPLACEMENT

A 25-amp fuse, located in the fuse block, protects the system except for the blower circuit. The fuse for the blower circuit is located in the electrical wiring between the junction block and the blower relay.

VACUUM LINE REPLACEMENT – ENGINE COMPARTMENT

Rubber vacuum hoses can be repaired by cutting the hose at a leak, inserting a connector and pushing the hoses onto the connector.

If the entire hose needs a replacing, pull the hose from each connector and thread a new hose into place. Follow the routing of the original hose.

For vacuum line routing, refer to figures 43 and 44.

1. 5.7L and 7.4L engines (figure 43).
2. 6.2L engine (figure 44).

VACUUM LINE REPLACEMENT – DASH

These lines are molded to a connector which is attached to a vacuum control switch on the control assembly.

Repair a leaking vacuum hose by cutting the hose at the leak, inserting a connector and pushing the hoses onto the connector.

If an entire hose needs replacing, cut the hose off at the connector and attach the hose to the control assembly vacuum switch.

To find the dash vacuum harness and actuator installation, refer to figure 45.

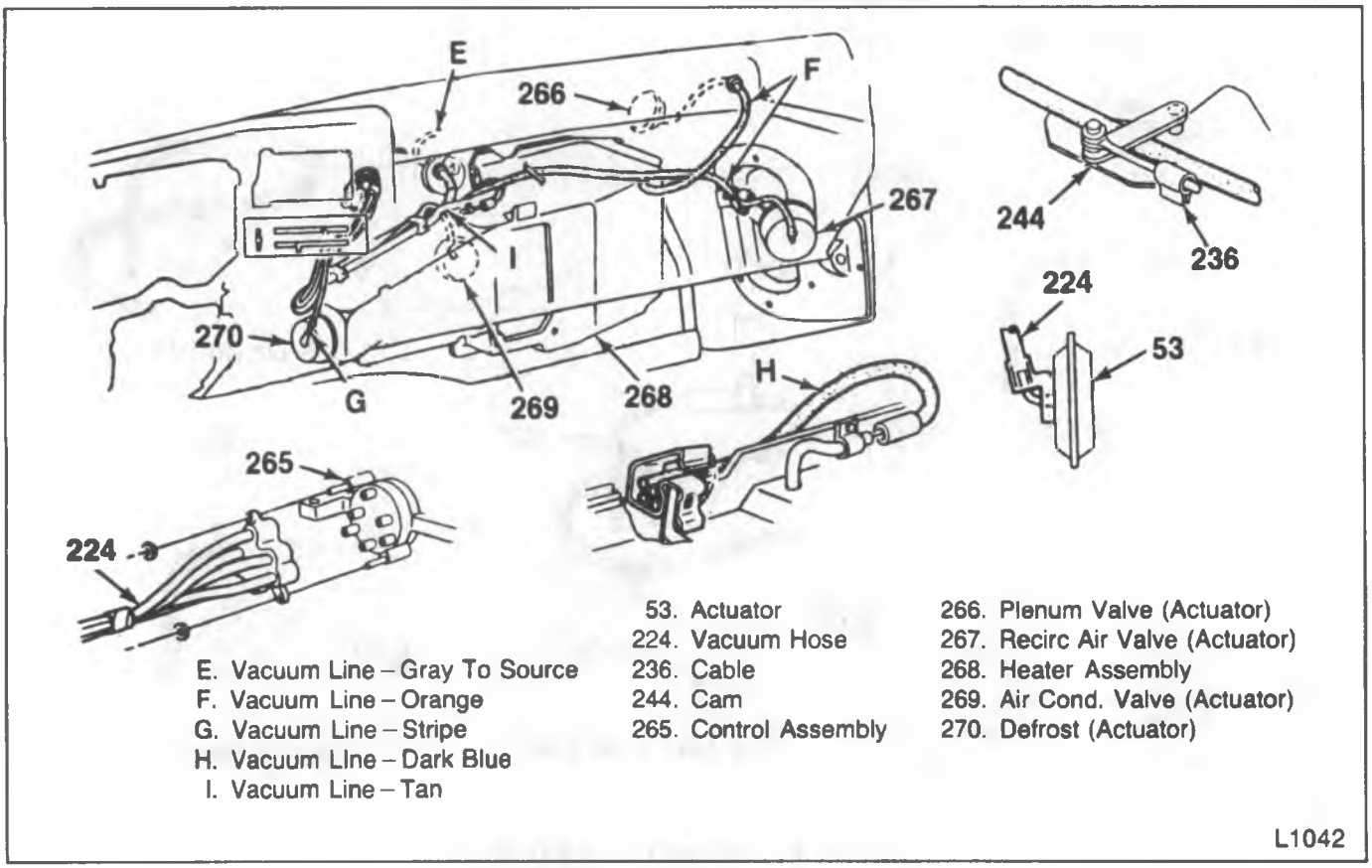

Figure 45 – Vacuum Control Hose – Dash

REFRIGERANT-12 HOSE REPLACEMENT

Refrigerant hoses are replaced as a unit. The hose assembly must be removed from the compressor and the condenser.

New seals (O-rings) must be installed on the replacement hose assembly. For installation, refer to figures 46 through 48.

Remove or Disconnect (Figures 46 through 48)

1. Recover the R-12 from the system.
2. Hose plate and bolt from the rear of the compressor (7).
3. Hose connections (97) at the condenser (11) and the accumulator (13).
   - Cap or plug all open connections.

Install or Connect (Figures 46 through 48)

1. Hose connections (97) at the accumulator (11).

   Tighten

   - Fittings to 24 N•m (18 ft. lbs.).
2. Hose connection (97) at the accumulator (13).

   Tighten

   - Fittings to 41 N•m (18 ft. lbs.).
3. Hose plate and bolt to the rear of the compressor (7).

   Tighten

   - Bolt to 34 N•m (25 ft. lbs.).
4. Refrigerant to the system.
   - Leak test the system.

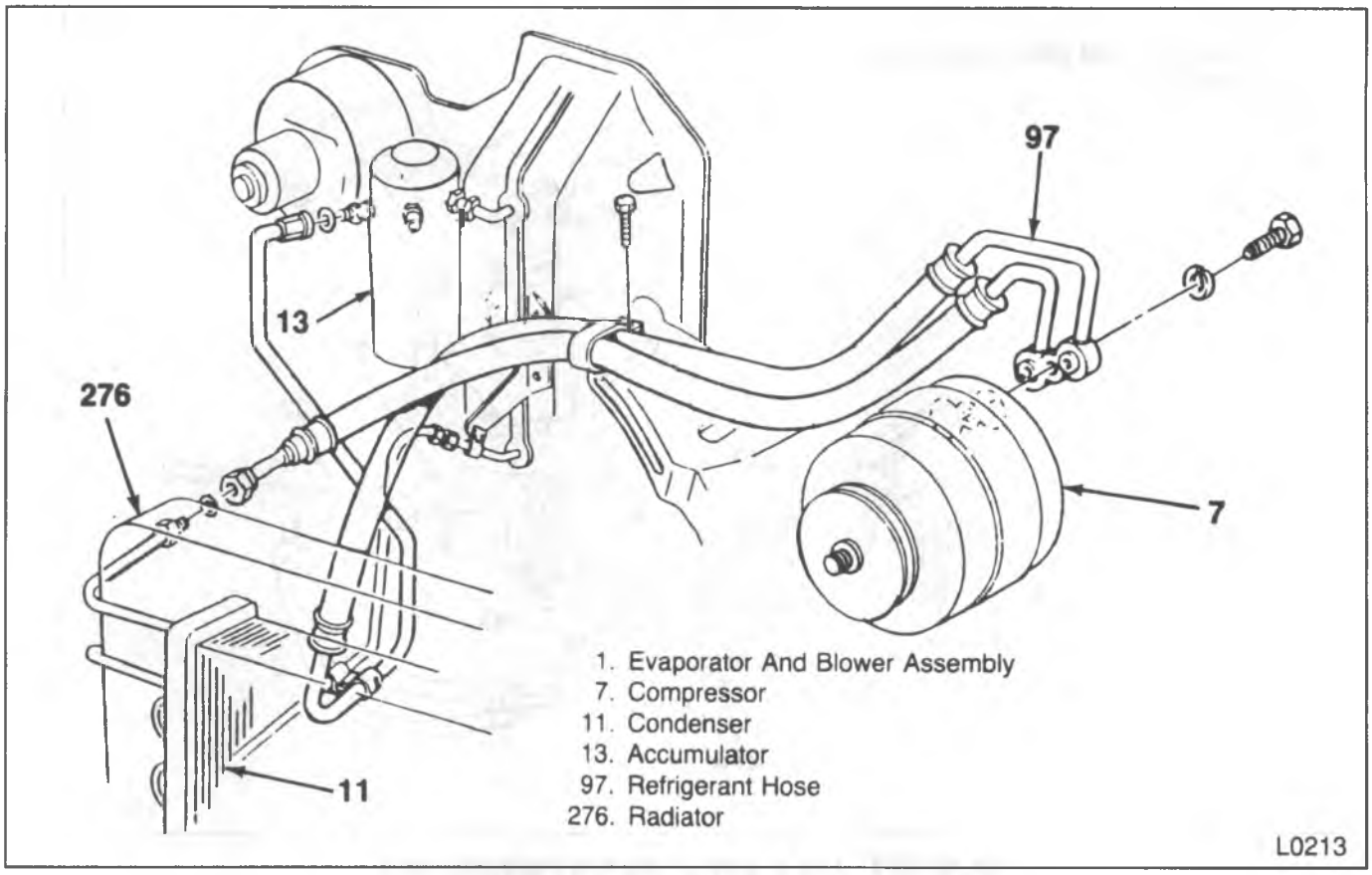

Figure 46 – R/V – 5.7L Refrigerant Hose Assembly

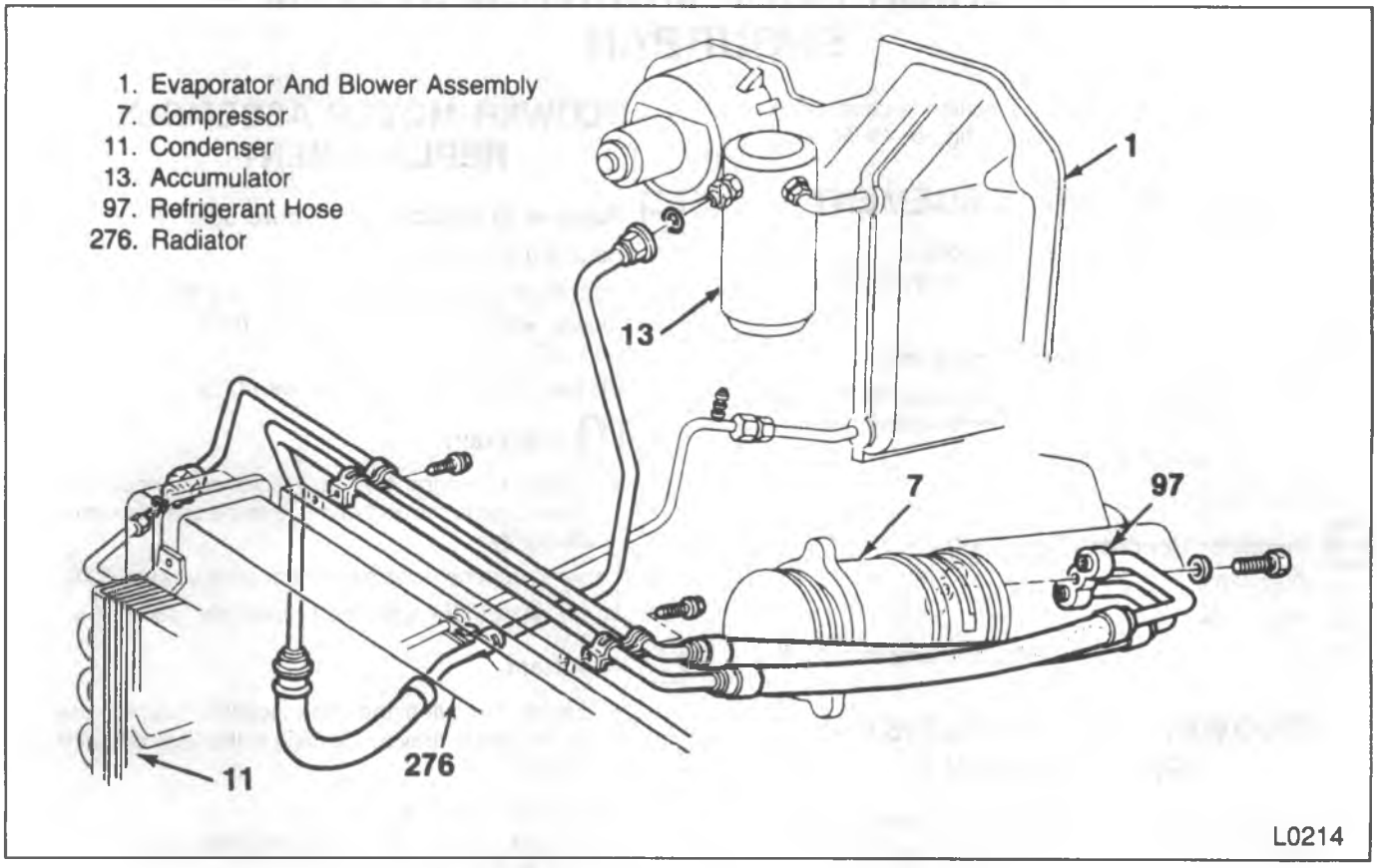

Figure 47 – R/V – 6.2L Engine Refrigerant Hose Assembly

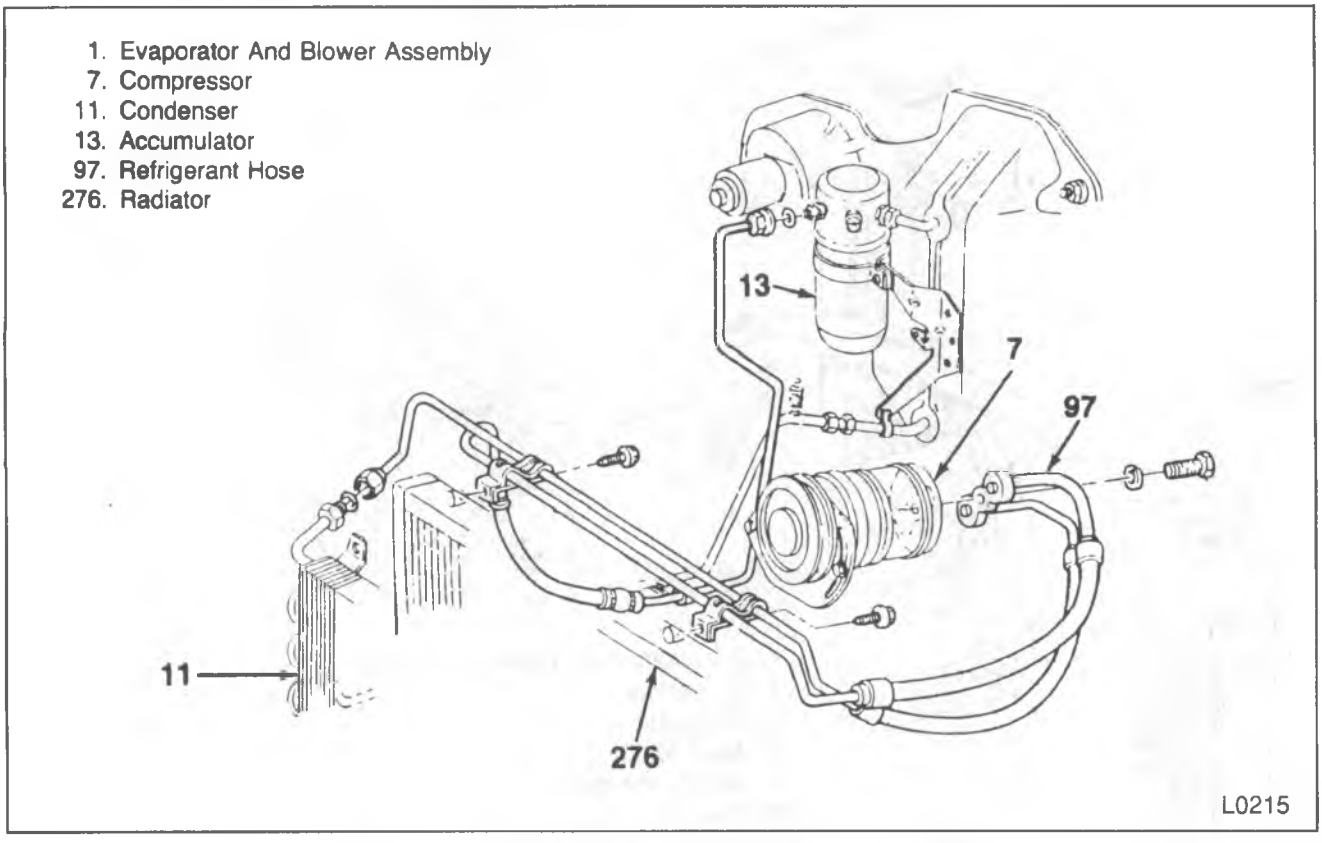

Figure 48—R/V—7.4L Engine Refrigerant Hose Assembly

REAR INTERIOR ROOF MOUNTED SYSTEM — SUBURBAN

The rear interior roof mounted system is used with the front air conditioning system. Refer to figures 49, 50 and 51.

REAR DUCT REPLACEMENT

This duct covers the blower-evaporator assembly located at the rear of the vehicle. It has two adjustable air outlets (figure 49).

Remove or Disconnect (Figure 49)

1. Screws (302) and washers (301) securing the duct to the roof panel and rear header brackets (308).
2. Drain tube from the rear duct.
3. Duct (303).

Install or Connect (Figure 49)

1. Duct (303).
2. Drain tube.
3. Screws (302), washers (301) and brackets (308).

BLOWER MOTOR RESISTOR REPLACEMENT

The blower motor resistor is located on the cover side of the blower-evaporator. To remove, refer to "Blower Motor Assembly Replacement" in this section.

BLOWER MOTOR ASSEMBLY REPLACEMENT

Remove or Disconnect (Figure 50)

1. Battery ground cable.
2. Rear duct (303) as outlined previously (figure 49).
3. Blower motor ground strap screw (328) and ground wire (331).
4. Blower motor harness connector (332).

Important

- Before removing the case screws, support the lower case to prevent damage to the case or motor assembly.

5. Lower to upper blower-evaporator case screws (334).
6. Lower case (336) and motor assembly (330).

Important

- Before removing the case screws, support the lower case to prevent damage to the case or motor assembly.

7. Motor retaining strap.
8. Motor and wheels (330) from the lower case.
9. Wheels from the motor shaft.

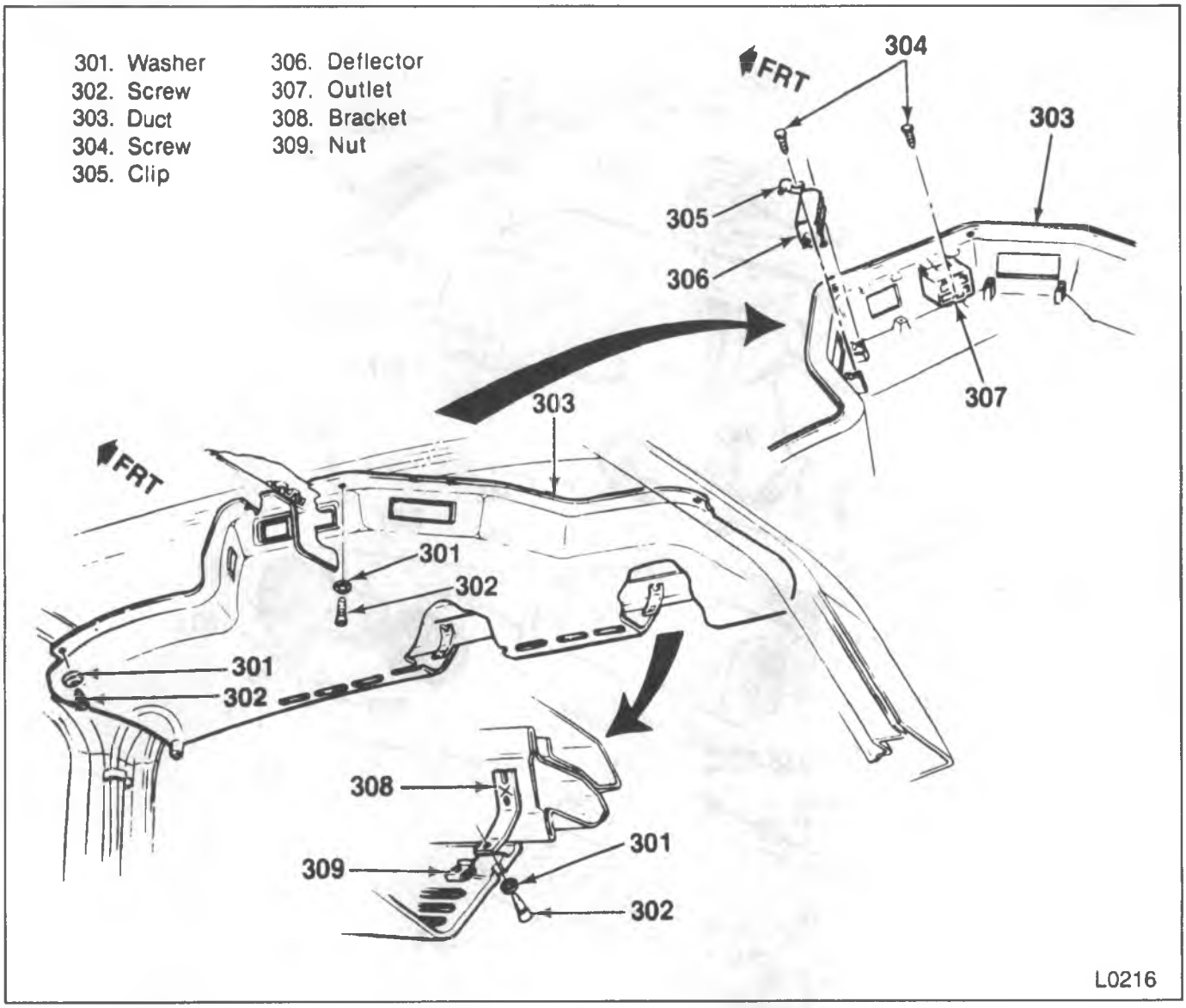

Figure 49 – Rear Interior Roof Mounted System – Duct

Install or Connect (Figure 50)

1. Wheels to the motor shaft (330).
   - Place the tension springs on the wheel hubs.
2. Motor and wheels to the case.
   - Align the wheels to prevent contact with the case.
3. Motor retaining strap and foam.
4. Lower case (336) and motor assembly (330) in the vehicle.
5. Lower to upper case screws (334).
   - Turn the blower wheels to prevent rubbing against the case.
6. Center ground wire (331) and screw (328).
7. Blower harness connector (332).
8. Rear duct (303) as outlined previously (figure 49).
9. Battery ground cable.

EXPANSION VALVE REPLACEMENT

This system incorporates an expansion valve which does not utilize an external equalizer line.

Remove or Disconnect (Figures 50 through 53)

1. Battery ground cable.
   - Purge the system of refrigerant.
2. Rear duct (303).
3. Blower motor harness connector (332).
4. Ground wire (331).
5. Lower to upper blower-evaporator case screws (334).

Important

- Blower removing the case screws, support the lower case and motor assemblies to prevent damage to the case or motor assembly.

6. Lower case (336) with motor assembly (330).

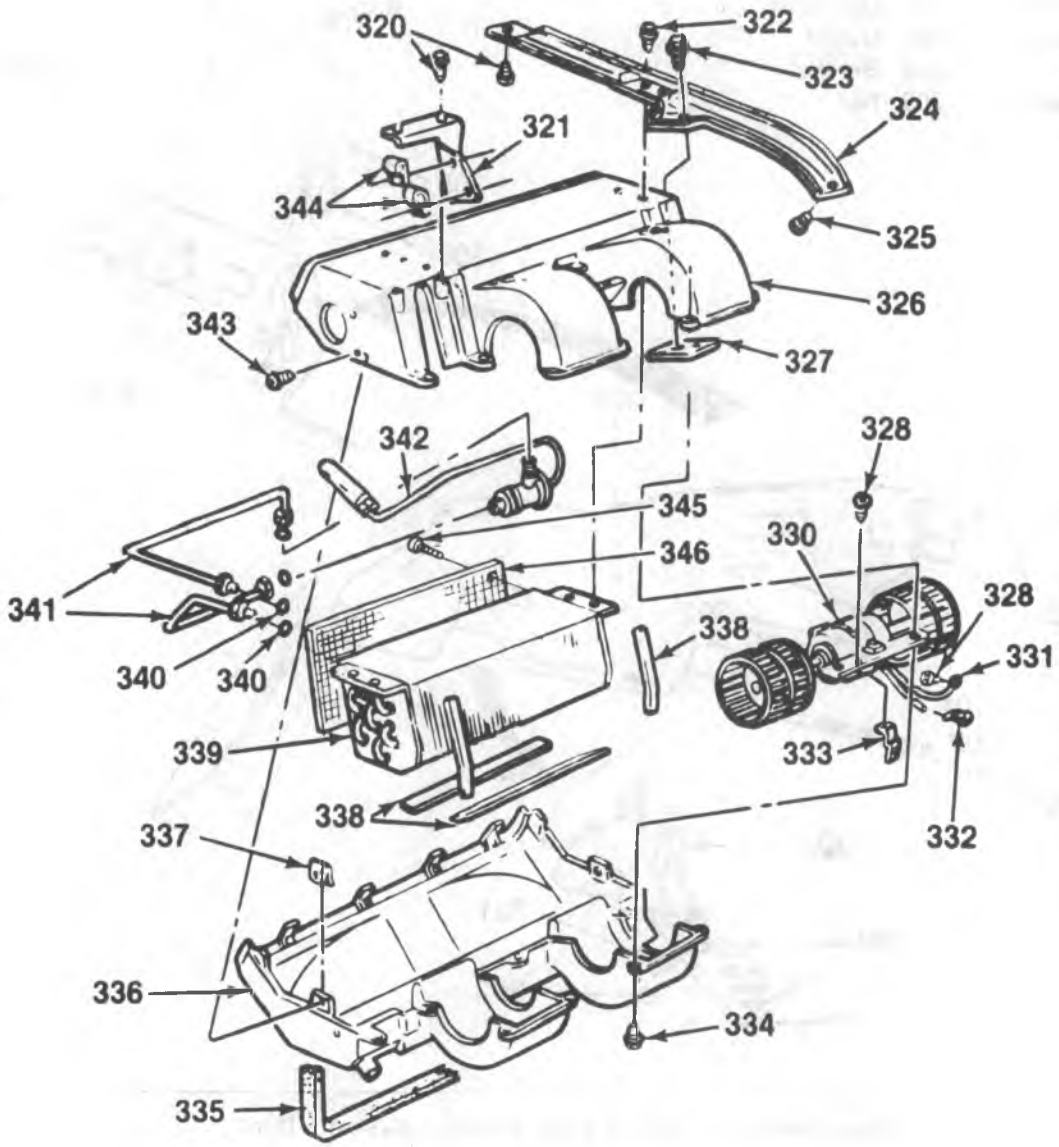

320. Screw
321. Bracket
322. Screw
323. Screw
324. Support
325. Screw
326. Upper Case
327. Plate
328. Screw
330. Motor Asm.
331. Ground Wire Eyelet
332. Harness Connector
333. Bracket
334. Screw
335. Seal
336. Lower Case
337. Clip
338. Seal
339. Core
340. Seal (O-Ring)
341. Refrigerant Lines
342. Expansion Valve
343. Screw
344. Clamps
345. Pin
346. Screen
347. Bulb Clamps

L1043

Figure 50 – Rear Interior Roof Mounted Evaporator and Blower – Component View

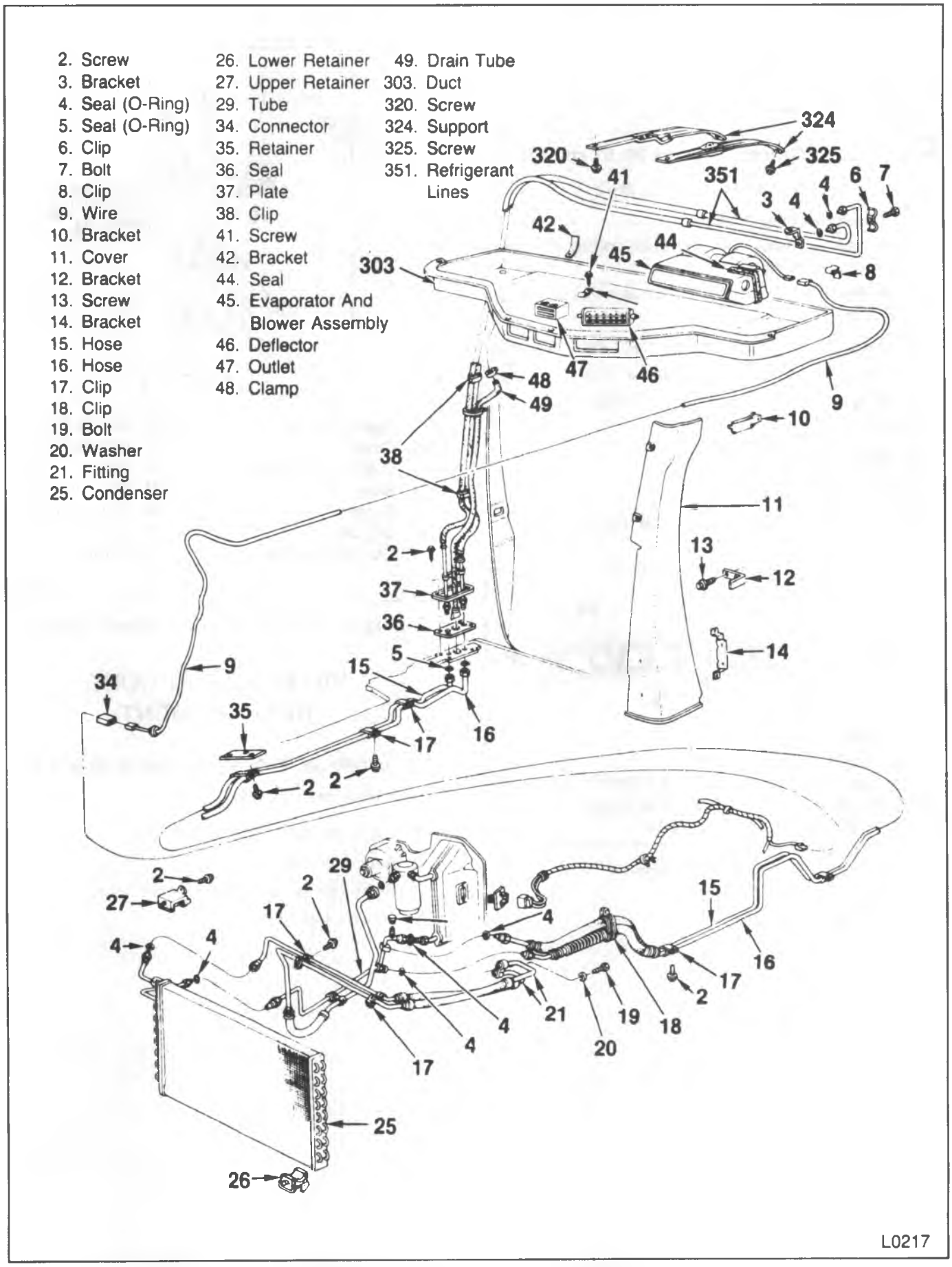

Figure 51—Rear Interior Roof Mounted Evaporator Hoses—Component View

7. Expansion valve sensing bulb clamps (347).
8. Valve inlet and outlet lines (341).
   - Cap or plug open lines.
9. Expansion valve assembly (342).

Install or Connect (Figures 50, 51 and 53)

1. New expansion valve assembly (342).
   - Remove caps or plug.
   - Use new seals (O-rings) (340) coated with clean refrigerant oil.
   - Attach the sensing bulb and sensing bulb clamps (347).
2. Lower case (336) and blower motor assembly (330).
3. Lower case-to-upper case screws (334).
4. Blower motor harness connector (332).
5. Ground wires (331).
6. Rear duct (303).
7. Battery ground cable.

- Evacuate charge and check the system.

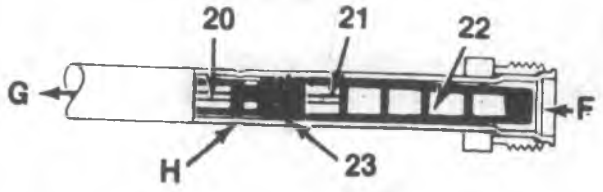

F. Inlet
G. Outlet (To Evaporator)
H. Dent On Tube (Retains the Expansion Tube)
20. Outlet Screen
21. Expansion Tube
22. Inlet Screen
23. Seal
B7208

Figure 52 – Orifice (Expansion Tube)

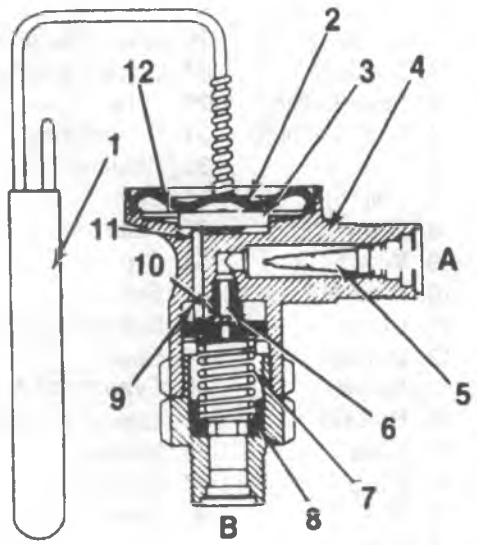

1. Power Element Thermobulb
2. Cover
3. Diaphragm Back-up Plate
4. Body
5. Screen
6. Orifice
7. Carriage Spring
8. Spring Seat
9. Carriage Seat
10. Seat
11. Actuating Pin
12. Diaphragm
A. Inlet
B. Outlet

F0190

Figure 53 – Thermostatic Expansion Valve

EVAPORATOR CORE REPLACEMENT

Remove or Disconnect (Figures 50 and 51)

1. Battery ground cable.

- Purge the system of refrigerant.

2. Rear duct (303).
3. Blower motor harness connector.
4. Ground wire (331).

5. Refrigerant lines at the rear of the blower evaporator assembly (351).
   - Cap or plug the open connections.
6. Blower-evaporator support-to-roof rail screws (320 and 325).
7. Blower and evaporator core (339).
   - Place the blower-evaporator upside down on a work bench.
8. Lower case assembly (336).
9. Upper case (326) and supports (324) from the evaporator core.
10. Expansion valve inlet and outlet lines (341).
    - Cap or plug open connections.
11. Expansion valve sensing bulb from the evaporator outlet line.
12. Valve (342).
13. Plastic pins (345) that hold the screen (346) to the core.
14. Screen (346).

Install or Connect (Figures 50 and 51)

1. Wire screen (346) to the front of the core.
2. Plastic pins (345).
3. Expansion valve inlet and outlet lines (341).
   - Use new seals (O-rings) (340) coated with clean refrigeration oil.
4. Sensing bulb to the evaporator outlet line.

- Bulb must make good contact with the line.
- Add 88.7 ml (3 ounces) of clean refrigerant oil to new core.

5. Upper case (326) and supports (324) to the core.
6. Lower core case (336) and blower assembly.
7. Blower-evaporator assembly to the roof.
8. Support-to-roof rails screws (320 and 325).
9. Refrigerant lines (351) to the rear of the blower-evaporator unit.
   - Use new seals (O-rings) (4) coated with clean refrigeration oil.
10. Blower lead harness connector (332).
11. Ground wire (331).
12. Rear duct (303).
13. Battery ground cable.
    - Evacuate, charge and check the system.

BLOWER MOTOR SWITCH REPLACEMENT

The auxiliary heater and air conditioning blower switches are located to the right of the steering wheel.

Remove or Disconnect (Figure 54)

1. Battery ground cable.
2. Switch retaining screws (280).
3. Wiring harness.
4. Switch (348) from bezel (282).

Install or Connect (Figure 54)

1. Switch (348) into bezel (282).
2. Wiring harness.
3. Switch retaining screws (280).
4. Battery ground cable.

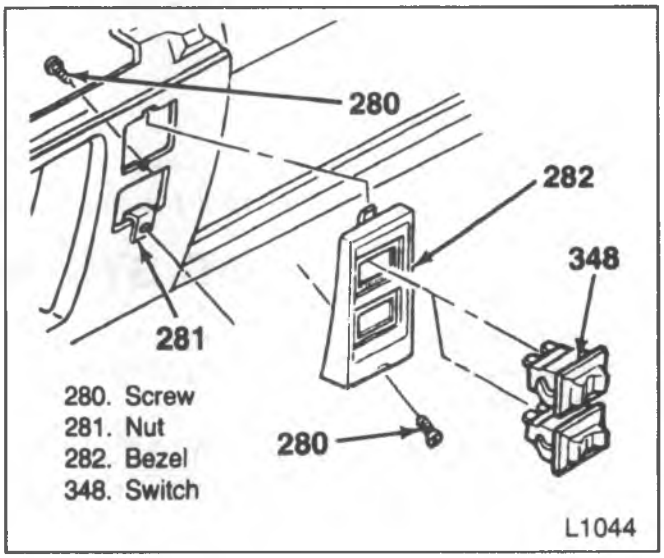

Figure 54 – Blower Switch Replacement

FUSE REPLACEMENT

A 25-amp fuse at the fuse box protects this system. A 20-amp fuse, located between the junction block and the rear blower motor switch, protects the rear blower high speed circuit.

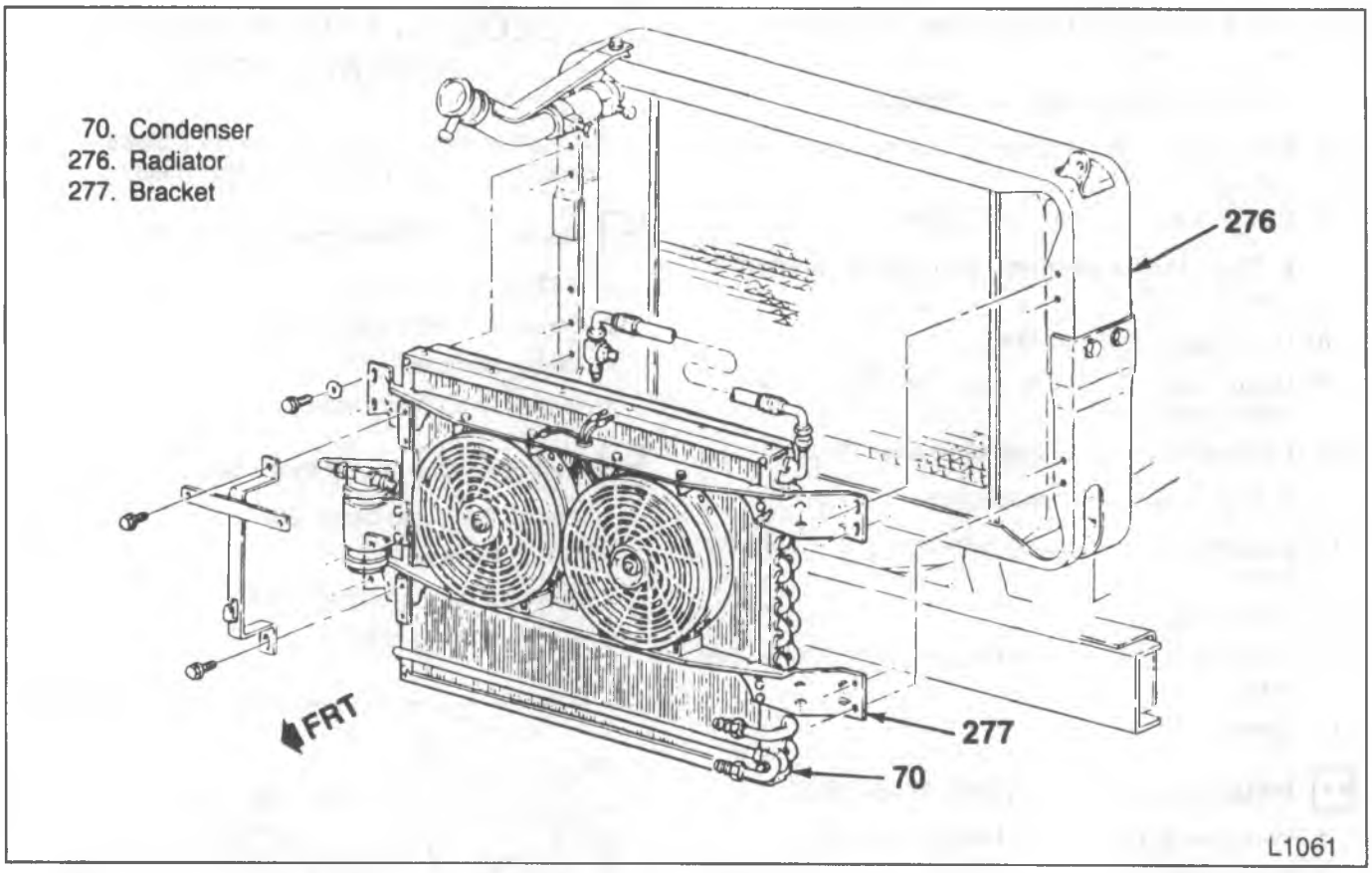

Figure 55 – P-Truck 7.4L Engine Condenser Installation (Motorhome Chassis)

A/C SYSTEM – P TRUCK

The compressor and condenser are installed on the vehicle during assembly. The remaining components are installed by the body manufacturers.

1. Condenser Mounting – refer to figures 55 and 56.
2. Compressor Installation – refer to figure 57 and 58.

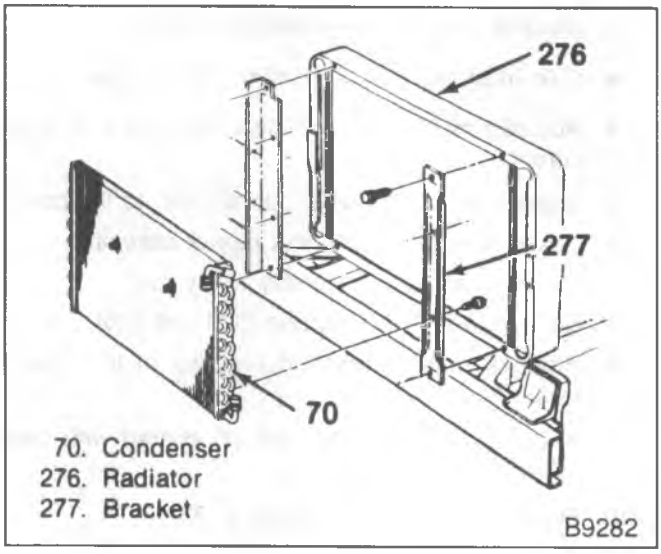

Figure 56 – P Model 5.7L Engine Condenser Installation

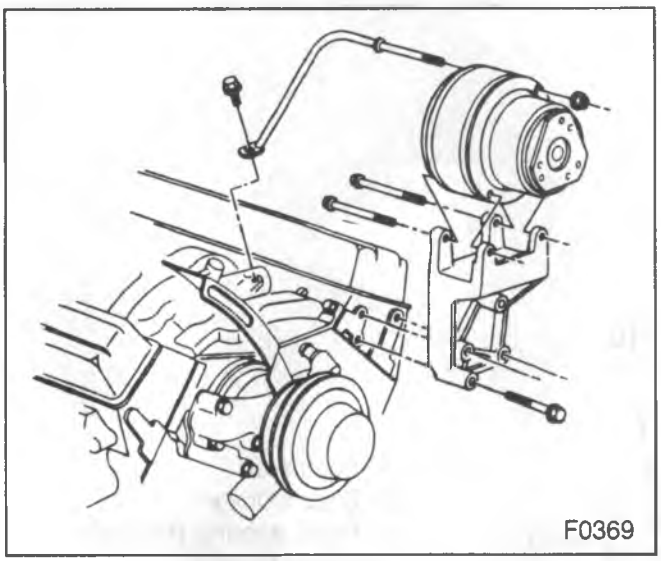

Figure 57 – P Model 5.7L Engine Compressor Installation

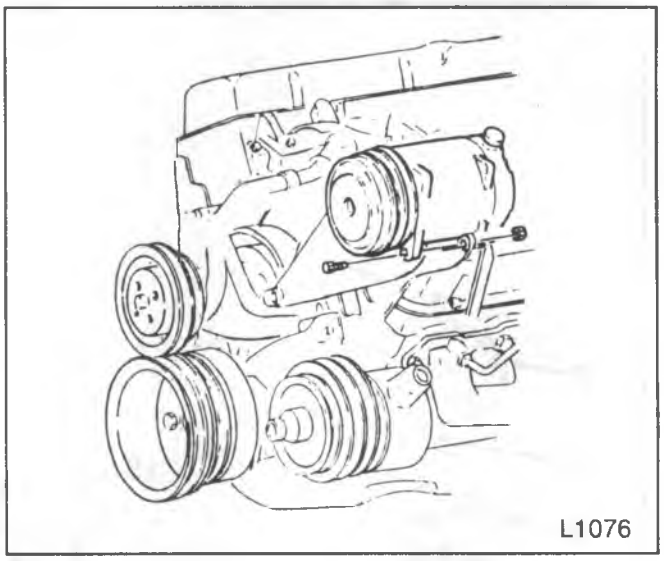

Figure 58 – P Model 7.4L Engine Compressor Installation

MINOR COMPRESSOR REPAIRS

Repairs to the clutch plate and hub, pulley and bearing, and coil and housing are considered "Minor" because they may be performed without purging the system.

Servicing the shaft seal and pressure relief valve are covered in the Unit Repair Manual because the system must be purged of Refrigerant-12.

Illustrations used in describing these operations show the compressor removed from the vehicle to illustrate the various operations.

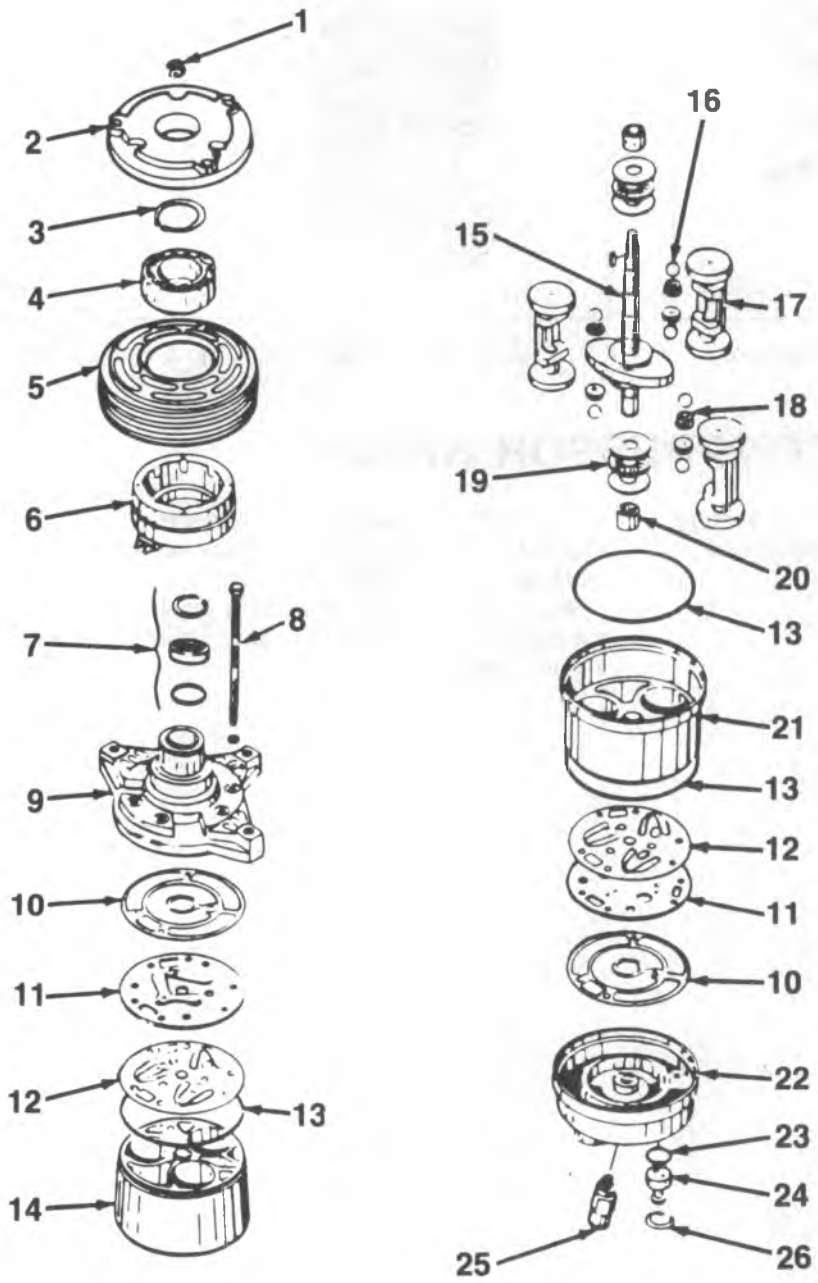

1. Shaft Nut
2. Clutch Driver
3. Rotor Bearing Retainer
4. Pulley Bearing
5. Pulley
6. Clutch Coil Assembly
7. Shaft Seal Parts
8. Through Bolts (6)
9. Front Head
10. Head Gasket
11. Valve Plate
12. Suction Reed
13. Cylinder O-Ring
14. Front Cylinder
15. Shaft and Axial Plate
16. Piston Ball (6)
17. Piston (3)
18. Shoe (6)
19. Thrust Bearing and Races
20. Main Bearing Rear Cylinder
21. Rear Cylinder
22. Rear Head
23. Switch O-Ring
24. System Control Switch
25. High Pressure Relief Valve
26. Retainer Ring-Switch

V0502

Figure 59 – Compressor Components (HR-6)

HR-6 COMPRESSOR

CLUTCH PLATE AND HUB ASSEMBLY REPLACEMENT

Remove or Disconnect (Figures 60 and 61)

Tools Required:

J 25030 Clutch Hub Holding Tool

J 33013-B Hub and Clutch Drive Plate Assembly Remover

J 33022 Nut Socket

J 33026-1 Thumb Screw

1. Clamp the holding fixture J 33026 in a vise and attach compressor to holding fixture with thumb screws J 33026-1 (figure 60).
2. Keep the clutch hub and drive plate assembly from turning by using the clutch hub holding tool J 25030. Remove the shaft nut using shaft nut socket J 33022 (figure 60).
3. With center screw forcing tip in place to thrust against the end of the shaft, thread the Clutch Plate and Hub Assembly Installer-Remover J 33013-B, into the hub. Hold the body of the remover with a wrench and turn the center screw into the remover body to remove the clutch plate and hub assembly (figure 61).

NOTICE: Do not drive or pound on the clutch hub or shaft. Internal damage to compressor may result.

4. Remove the shaft key and retain for reassembly.

Install or Connect (Figures 62 and 63)

1. Install the shaft key into the hub key groove (figure 62). Allow the key to project approximately 3.2mm (1/8") out of the keyway. The shaft key is curved slightly to provide an interference fit in the hub key groove.
2. Be sure the frictional surface of the clutch plate and the clutch rotor are clean before installing the clutch plate and hub assembly.
3. Align the shaft key with the shaft key way and place the clutch plate and the hub assembly onto the compressor shaft.
4. Remove the forcing tip on J 33013-B clutch plate and hub assembly installer-remover center screw and reverse the body direction on the center screw, as shown in Figure 63.

NOTICE: The forcing tip on J 33013-B remover-installer center screw must be flat or the end of the shaft/axial plate assembly will be damaged.

5. Install the clutch plate and the hub installer-remover J 33013-B with bearing as shown in figure 63. The body of the J 33013-B installer-remover should be backed off sufficiently to allow the center screw to be threaded onto the end of the compressor shaft.
6. Hold the center screw with a wrench. Tighten the hex portion of the installer-remover J 33013-B body to press the hub onto the shaft. Tighten the body several turns, remove the installer and check to see that the shaft key is still in place in the key way before installing the clutch plate and hub assembly to its final position. The air gap between frictional surfaces of the clutch plate and the clutch rotor should be 0.38-0.64mm (.015-.025").
   - If the center screw is threaded **fully** onto the end of the compressor shaft, or if the body of the installer is held and the center screw is rotated, the key will wedge and will break the clutch hub.
7. Remove installer J 33013-B, check for proper positioning of the shaft key (even or slightly above the clutch hub). Install the shaft nut. Hold the clutch plate and hub assembly with clutch hub holding tool J 25030 and using shaft nut socket J 33022, tighten the nut against the compressor shaft shoulder to 11-22 N•m (8-16 ft. lbs.) torque, using a 0-35 N•m (0-25 ft. lbs.) torque wrench.
8. Spin the pulley rotor by hand to see that the rotor is not rubbing the clutch drive plate.

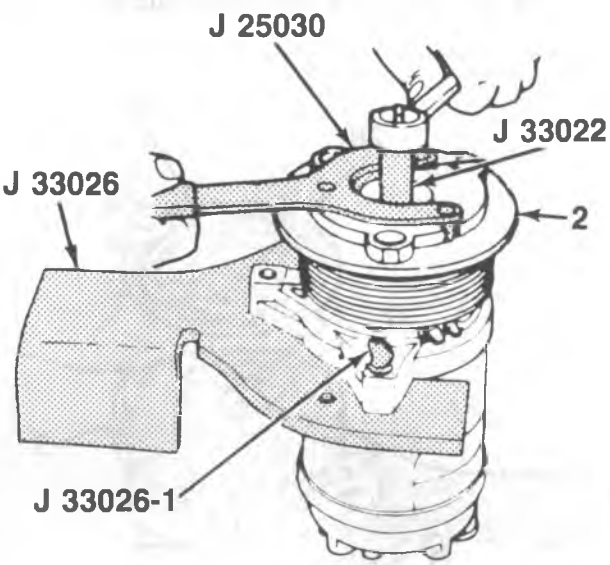

2. Clutch Plate and Hub Assembly

V0503

Figure 60 – Removing the Shaft Nut

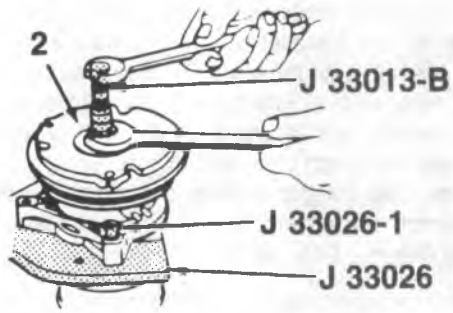

2. Clutch Plate and Hub Assembly

V0504

Figure 61 – Removing the Clutch/Hub Assembly

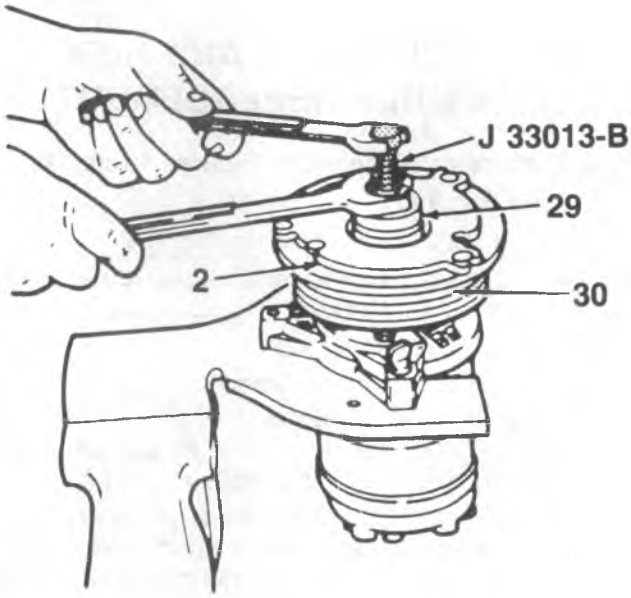

2. Clutch Plate and Hub Assembly
29. Drive Plate Installer Bearing
30. Air Gap (.015"-.025") 0.38-0.64mm

VO506

Figure 63 – Installing the Drive Plate

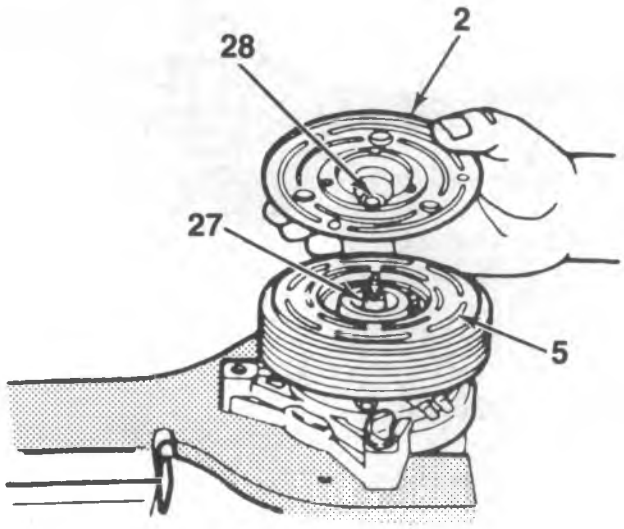

2. Clutch Plate and Hub Assembly
5. Clutch Pulley Rotor
27. Shaft Keyway
28. Shaft Key

V0505

Figure 62 – Aligning the Drive Plate Key

PULLEY AND BEARING ASSEMBLY REPLACEMENT

Remove or Disconnect (Figures 64, 65 and 66)

Tools Required:

- J 6083 Snap Ring Pliers
- J 8433-1 Puller Cross Bar
- J 9398-A Bearing Remover
- J 9481-A Bearing Installer
- J 21352-A Support Block
- J 29886 Driver Handle
- J 33017 Pulley Rotor and Bearing Installer
- J 33019 Bearing Staking Guide and Pin
- J 33020 Pulley Rotor and Bearing Puller
- J 33023 Pulley Rotor and Bearing Puller Guide
- J 33025 Puller Leg

1. Remove the clutch plate and hub assembly as described previously.
2. Remove rotor and bearing assembly retaining ring, using snap ring pliers J 6083 (figure 64).
3. Install pulley rotor and bearing puller guide J 33023-A to the front head (figure 65) and install J 33020 pulley rotor and bearing puller down into the inner circle of slots in the rotor. Turn the J 33020 puller clockwise in the slots to engage the puller tangs with the segments between the slots in the rotor.

4. Hold the J 33020 puller in place and tighten the puller screw against the puller guide to remove the pulley rotor and bearing assembly.
5. To prevent damage to the pulley rotor during bearing removal the rotor hub must be properly supported.

   Remove the forcing screw from J 33020 puller and, with the puller tangs still engaged in the rotor slots, invert the assembly into a solid flat surface or blocks as shown in figure 66.
6. Drive the bearing out of the rotor hub with rotor bearing remover J 9398-A and J 29886 universal handle (figure 66).

It is not necessary to remove the staking in front of the bearing to remove the bearing, however, it will be necessary to file away the old stake metal for proper clearance for the new bearing to be installed into the rotor bore or the bearing may be damaged.

Install or Connect (Figures 64, 65, 67 and 78)

1. Place the pulley rotor on the J 21352-A support block to fully support the rotor hub during bearing installation (figure 67).

NOTICE: Do Not support the rotor by resting the pulley rim on a flat surface during the bearing installation or the rotor face will be bent.

2. Align the new bearing squarely with the hub face bore and using puller and bearing installer J 9481-A with universal handle J 29886, drive the bearing fully into the hub (figure 67). The installer will apply force to the outer race of the bearing, if used as shown.
3. Place bearing staking guide J 33019-1 and bearing staking pin J 33019-2 in the hub bore. Shift the rotor and bearing assembly on the J 21352-A support block to give full support of the hub under the staking pin location. A heavy-duty rubber band may be used to hold the stake pin in the guide and the stake pin should be properly positioned in the guide after each impact on the pin.
4. Using care to prevent personal injury, strike the staking pin with a hammer until a metal stake, similar to the original, is formed **down to** but **not touching** the **bearing.**.

   Noisy bearing operation and reduced bearing life may result if outer bearing race is deformed while staking. The stake metal should not contact the outer race of the bearing. Stake three (3) places 120° apart as shown in figure 68.
5. With the compressor mounted to the J 33026 holding fixture, position the rotor and bearing assembly on the front head (figure 65).
6. Position the J 33017 pulley rotor and bearing installer and J 33023-A puller pilot directly over the inner race of the bearing (figure 65).
7. Position puller crossbar J 8433-1 on the puller pilot J 33023-A and assemble the two J 33026-2 through bolts and washers through the puller bar slots and thread them into the J 33026 holding fixture (figure 65). The thread of the through bolts should engage the full thickness of the holding fixture.
8. Tighten the center screw in the J 8433-1 puller crossbar to force the pulley rotor and bearing assembly onto the compressor front head (figure 65). Should the J 33017 pulley rotor and bearing installer slip off direct in-line contact with the inner race of the bearing, loosen the J 8433-1 center forcing screw and realign the installer and pilot so that the J 33017 installer will properly clear the front head.
9. Install rotor and bearing assembly retainer ring, using snap ring pliers J 6083 (figure 64).
10. Reinstall clutch plate and hub assembly as described previously.

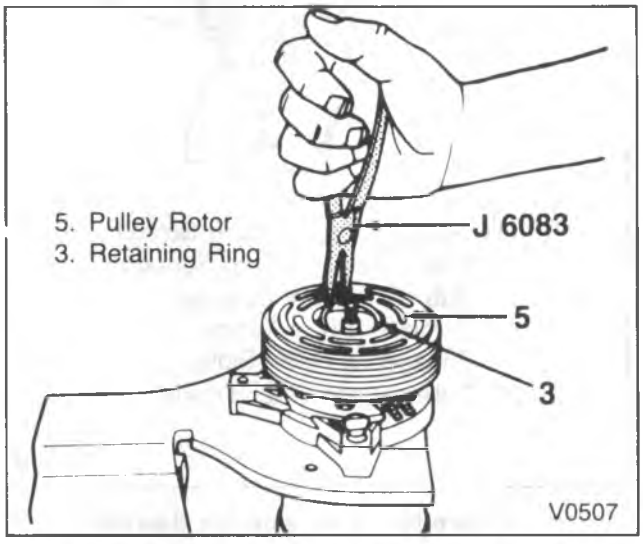

Figure 64 – Removing the Retainer Ring

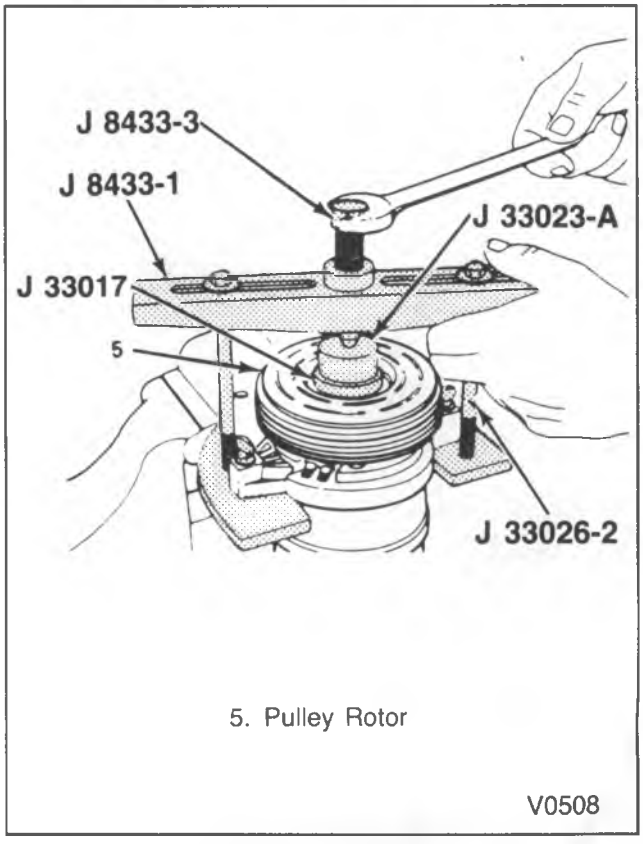

Figure 65 – Removing the Pulley and Bearing

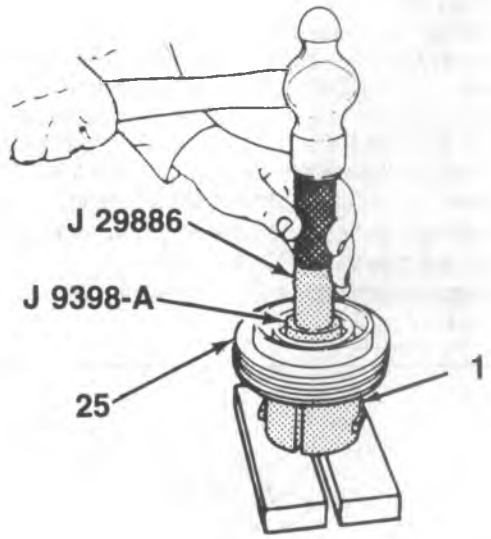

1. J-33020 (Less Forcing Screw) Inverted and Used to Support Hub of Rotor for Bearing Removal. Puller Tangs Engaged in Rotor Slots.
25. Pulley Rotor "Face Down"

V0509

Figure 66 – Removing the Bearing

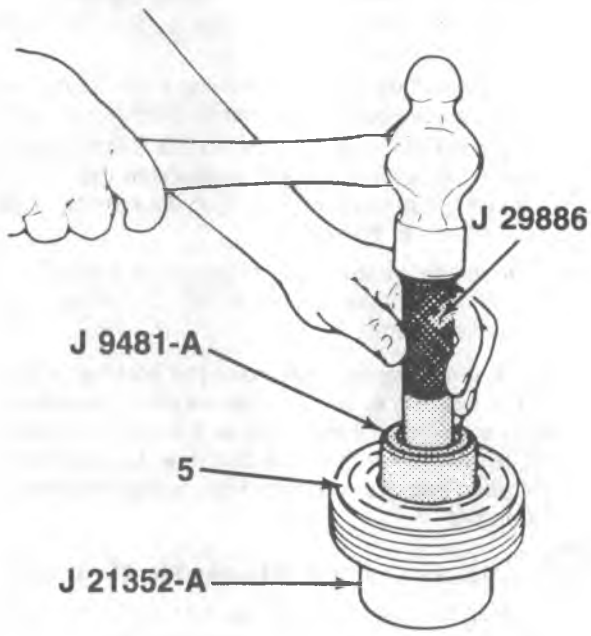

5. Pulley Rotor

V0510

Figure 67 – Installing the Bearing

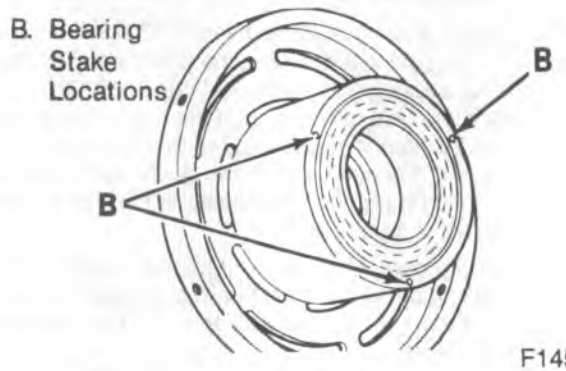

F1451

Figure 68 – Staking the Bearing

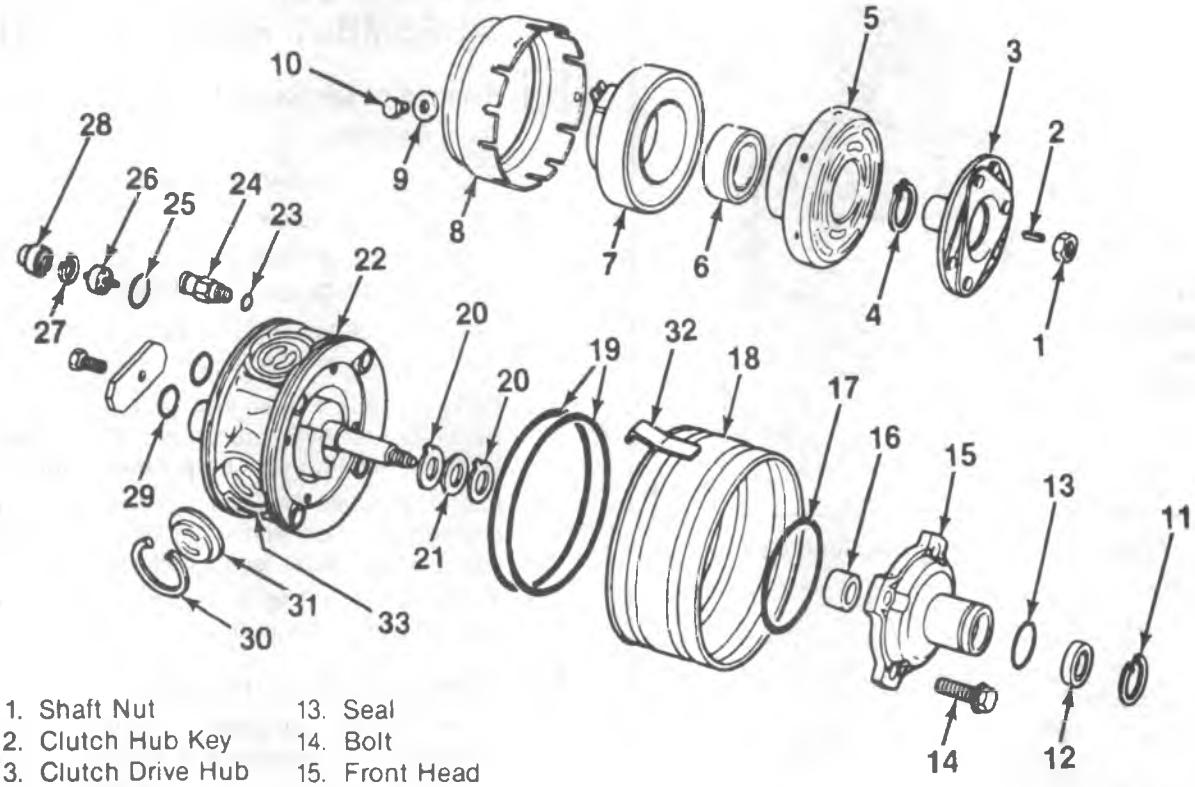

1. Shaft Nut
2. Clutch Hub Key
3. Clutch Drive Hub
4. Retainer Ring
5. Rotor
6. Bearing
7. Coil
8. Pulley
9. Washer
10. Screw
11. Retainer Ring
12. Shaft Seal
13. Seal
14. Bolt
15. Front Head
16. Bearing
17. Seal
18. Shell
19. Seals
20. Thrust Washer
21. Belleville Washer
22. Cylinder Body and Shaft
23. Seal
24. Pressure Relief Valve
25. Seal
26. High Pressure Switch
27. Retainer
28. Cap
29. Seals
30. Retainer
31. Valve Plate
32. Retaining Strap
33. Piston and Reed Assembly

B8291

Figure 69 – Compressor Component View (R-4 Compressor)

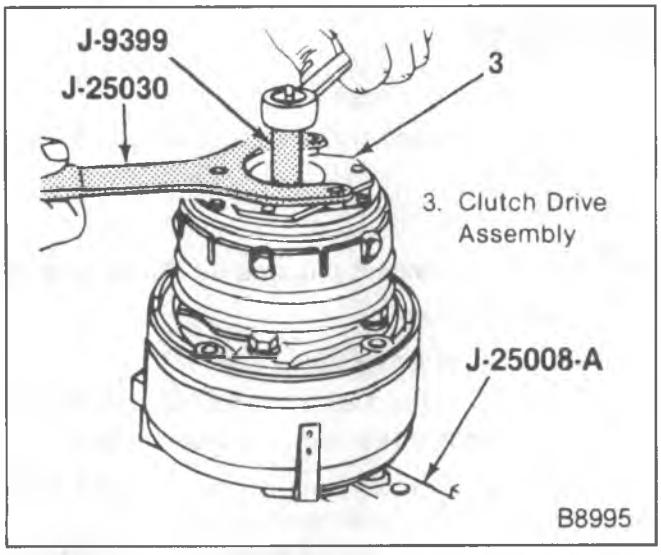

Figure 70 – Replacing the Shaft Nut

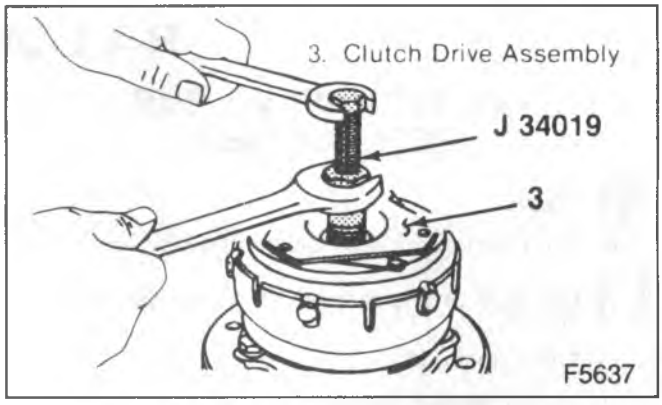

Figure 71 – Clutch Plate and Hub Removal

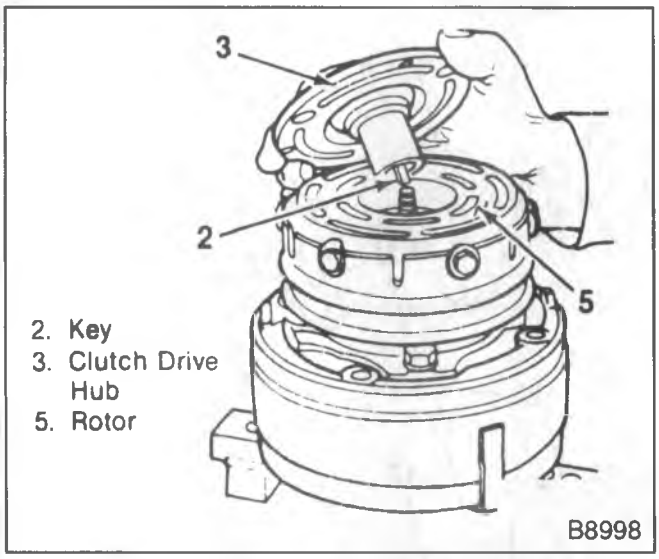

Figure 72—Installing the Shaft Key

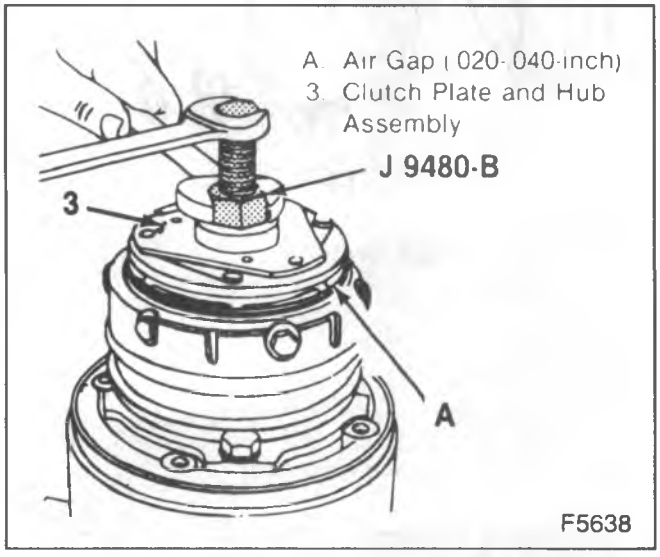

Figure 73—Installing the Clutch Plate and Hub

CLUTCH COIL AND HOUSING ASSEMBLY REPLACEMENT

Remove or Disconnect (Figure 65)

Tools Required:

- J 8433-1 Puller Crossbar
- J 8433-3 Screw
- J 33023-A Puller Pilot
- J 33024 Clutch Coil Installer
- J 33026 Holding Fixture
- J 33026-2 Thru Bolts

1. Perform Steps 1 through 4 of "Clutch Rotor and/or Bearings" removal procedure. **Mark clutch coil terminal location on compressor front head.**
2. Install J 33023-A puller pilot on front head of compressor. Also install J 8433-1 puller crossbar with J 33025 puller legs as shown in figure 65.
3. Tighten J 8433-3 forcing screw against the puller pilot to remove the clutch coil.

Install or Connect (Figure 65)

1. Place the clutch coil assembly on the front head with the terminals positioned at the "marked" location.
2. Place the J 33024 clutch coil installer over the internal opening of the clutch coil housing and align installer with the compressor front head.
3. Center the J 8433-1 puller crossbar in the countersunk center hole of the J 33024 clutch coil installer. Install the J 33026-2 through bolts and washers through the crossbar slots and thread them into the holding fixture J 33026 to full fixture thickness (figure 65).
4. Turn the center forcing screw of the J 8433-1 puller crossbar to force the clutch coil onto the front head. Be sure clutch coil and J 33024 installer stay "in-line" during installation.

R-4 COMPRESSOR

CLUTCH DRIVE HUB REPLACEMENT

Clean

- The compressor with solvent and blow dry with air.

Remove or Disconnect (Figures 69, 70 and 71)

Tools Required:

- J 9399-A Thin Wall Socket
- J 25030 or J 33027 Clutch Hub Holding Tool
- J 34019 or J 9401-B Clutch Plate and Hub Assembly Remover

- Loosen compressor mounting brackets.

1. Belt.

- Reposition the compressor for access, if necessary.
- Hold clutch hub with J 33027 or J 25030.

2. Shaft nut with J 9399-A.
3. Clutch plate and hub assembly with J 34019 or J 9401-B.
4. Shaft key.

Install or Connect (Figures 69, 70, 72 and 73)

Tools Required:

- J 9399-A Thin wall socket
- J 25030 or J 33027 Clutch Hub Holding Tool
- J 9401-B Hub and Drive Plate Installer

- Do not drive or pound on the clutch hub or the shaft. This may cause internal damage.
- Make sure the contact surfaces of the clutch plate and hub are clean.

1. Shaft key.
   - Allow the shaft key to extend 4.8 mm (3/16-inch) out of the key way.
   - The shaft key is curved slightly to give an interference fit in the groove.

Important

2. Clutch drive hub.
   - Install J 9401-B
   - Hold the hex portion of J 9401-B with a wrench and tighten the center screw to press the hub onto the shaft until there is a 0.5-1.0 mm (0.20-0.40-inch) air gap between the frictional surfaces of the clutch plate and the clutch rotor.
   - Remove J 9401-B.
3. Shaft nut with J 9399-A.

Tighten

- Shaft nut to 17 N•m (13 ft. lbs.)
- Hand spin the pulley to check for free rotation.

CLUTCH ROTOR AND/OR BEARING REPLACEMENT – MULTI-RIB TYPE

Remove or Disconnect (Figures 68, 73, 74 and 76)

Tools Required:

J 6083 Snap Ring Pliers
J 8092 Driver Handle
J 9398-A Rotor Bearing Remover
J 9481-A Pulley Bearing and Pulley Installer

1. Rotor (5) and hub (3) assembly (figure 68).
2. Retaining ring (4) with J 6083 (figure 73).
3. Rotor (5) and bearing (6) assembly with J 25031 (figure 96).
   - Hold the arms of J 25031 guide over the shaft (39) end.
   - Install the J 25031 puller over the guide.
   - Engage the arms of J 25031 puller down into the recessed edge of the rotor hub (5).
   - Hold the arms of J 25031 and tighten the screw against the guide.
4. Bearing (6) from the rotor hub (5) with J 9398 and J 8092 (figure 76).
   - Place the rotor hub clutch face up on wooden blocks on a flat surface.
   - Drive the bearing out with J 9398 and J 8092.

Install or Connect (Figures 77 and 79)

Tools Required:

J 6083 Snap Ring Pliers
J 8092 Universal Handle
J 9481-A Pulley and Bearing Installer

1. Bearing to the rotor and hub assembly with J 8029 and J 9481-A (figure 77).
   - Place the pulley rotor and hub assembly face down on a flat surface.
   - Align the bearing to the pulley rotor and hub bore.
   - Using a center punch with a 45 degree angle point, stake 1.1-1.4 mm (0.45-0.55 inch) deep in the places 120 degrees apart (figure 77).
2. Rotor (5) and bearing (6) assembly to the compressor with J 26271-A and J 8092 (figure 79).
   - Position the pulley rotor and bearing assembly to the compressor.
   - Drive with J 26271-A and J 8092.
3. Retainer ring (4) with J 6083.
4. Clutch drive hub (3).

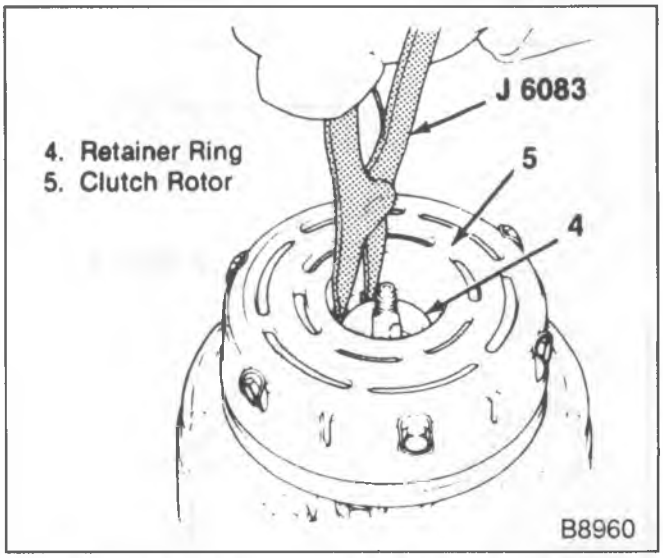

Figure 74—Removing the Retaining Ring

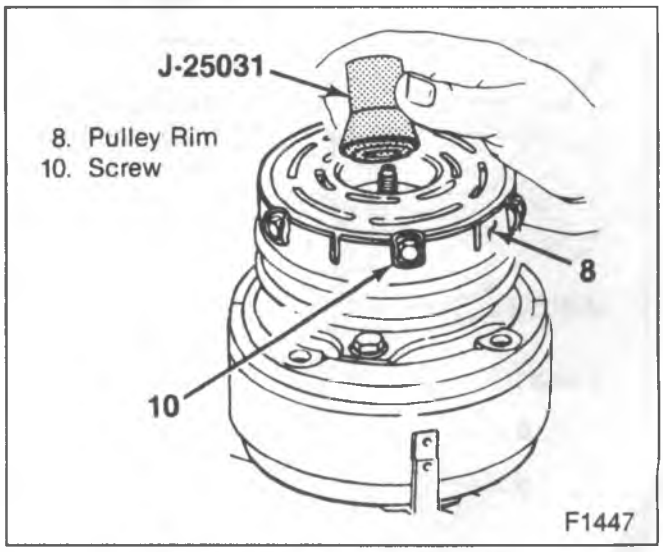

Figure 75—Installing J 25031

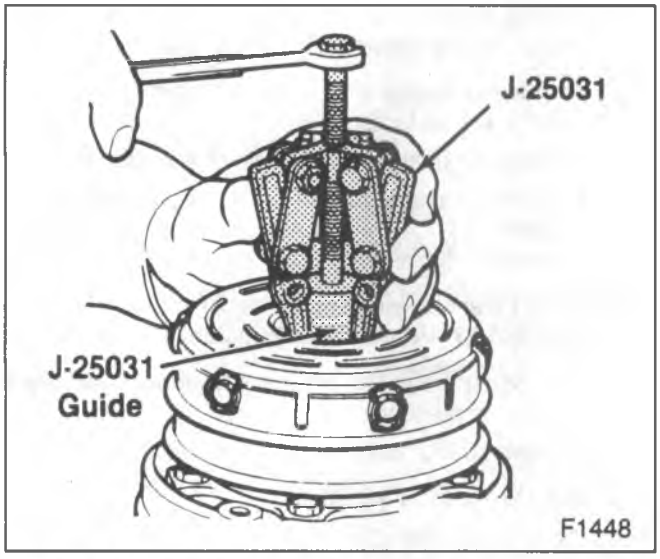

Figure 76 – Removing the Clutch Rotor Assembly

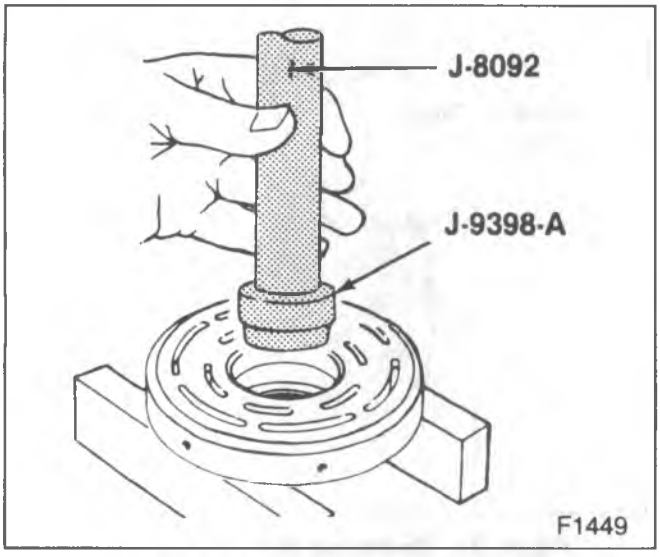

Figure 77 – Removing the Bearing

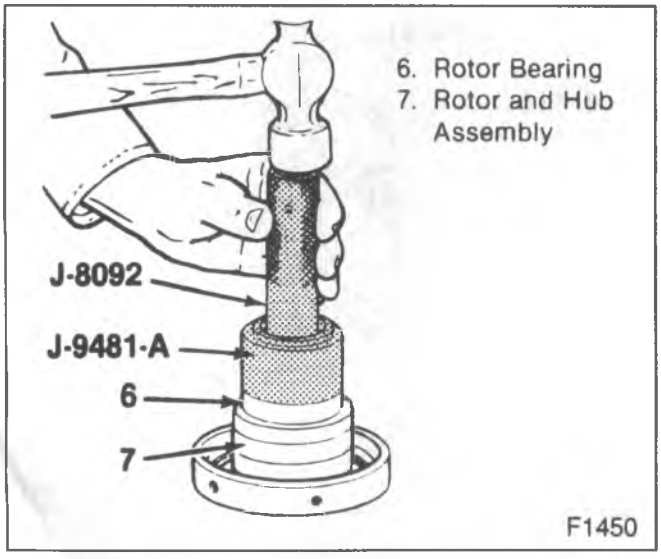

Figure 78 – Installing the Bearing

CLUTCH COIL AND/OR PULLEY RIM REPLACEMENT – V-BELT DRIVE

Remove or Disconnect (Figure 68)

Tool Required:

J 25031 Rotor and Bearing Puller

1. Clutch drive hub (3).
2. Rotor (5) and bearing (6) assembly.
3. Pulley rim mounting screws (9) and washers (10).
4. Pulley rim (11).

Install or Connect (Figures 68, 79 and 80)

Tool Required:

J 26271-A Rotor and Bearing Installer

- Clutch (7), pulley rim (8), clutch rotor (5) and bearing (6) (figure 80).

Important

- Use new screws (10) and washers (9). Apply Loctite 601 or equivalent to the screw threads, but do not tighten.
- Before seating the assembly, place the clutch coil terminals in relation to the compressor. Align the three protrusions on the rear of the clutch coil with the locator holes in the front head.

1. Clutch coil pulley rim (8) and the clutch rotor (5) and bearing (6) to the compressor with J 26271-A and J 8092.
2. Retainer ring (4).
3. Clutch drive hub (3).

Measure

- Clutch plate to clutch rotor gap is 0.5 to 1.0 mm (0.020 to 0.040-inches).

Important

- Hand spin the pulley to check for free rotation.

Tighten

- Pulley rim mounting screws (10) to 11 N•m (100 in. lbs.)
- Bend the washers (9) to secure the screws (10).

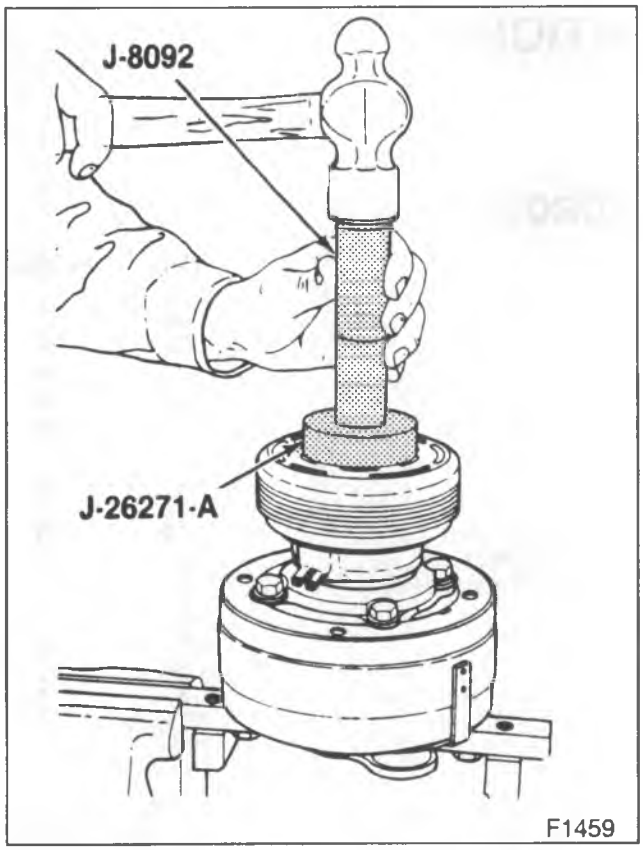

Figure 79 – Installing the Rotor and Bearing (Multi-Rib Type)

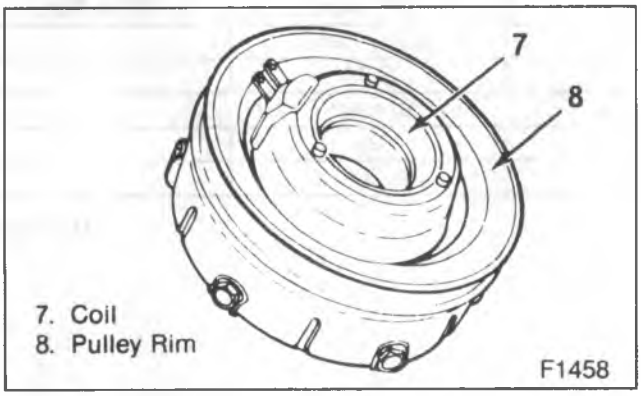

Figure 80 – Clutch Coil, Pulley Rim, Rotor and Bearing Assembly

CLUTCH COIL AND/OR PULLEY RIM REPLACEMENT – MULTI-RIB TYPE

Remove or Disconnect (Figures 68 and 81)

Tools Required:

J 8433 Heavy Duty Pulley Puller
J 24092 Clutch Coil Putter Legs
J 25031 Rotor and Bearing Assembly Remover

1. Clutch drive hub (3).
2. Rotor (5).
   - Mark the location of the clutch coil terminals on the compressor.
3. Clutch coil (7) from the front head (15) (figure 81).
   - Install J 25031 guide to shaft (34).
   - Install J 24092 with J 8433.
   - Turn the screw in J 8433 to remove the clutch coil.

Install or Connect (Figures 68 and 81)

1. Clutch coil (7) to the front head (15).
   - Position the coil terminals as marked during removal.
2. Rotor (5) and bearing (6) to the compressor with J 26271.

Important

- Before seating the assembly, position the clutch coil terminals in the proper location to the compressor.
- Align the three protrusions on the rear of the clutch coil housing with the locator holes in the front head.

3. Retainer ring (4).

Measure

- Clutch plate to clutch rotor air gap is 0.5-1.0 mm (0.020-0.040-inch).

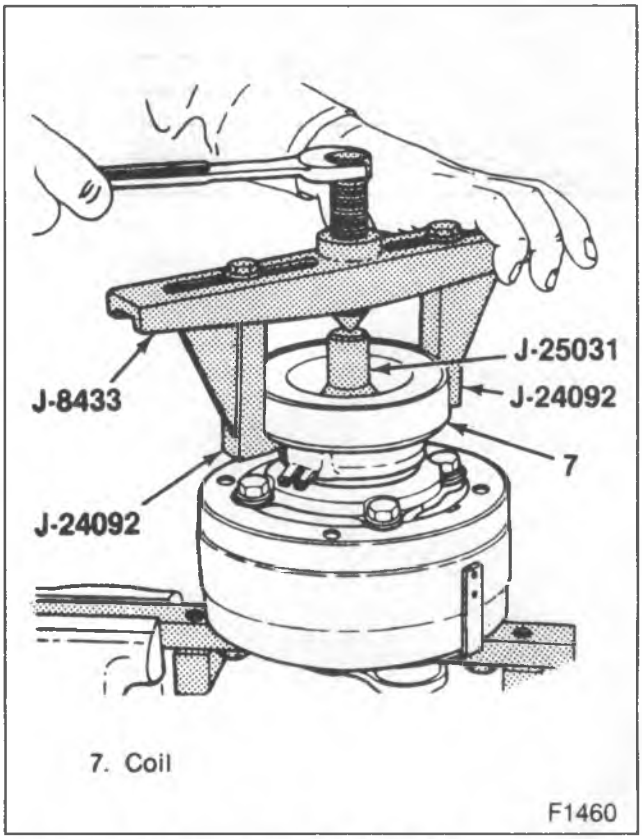

Figure 81 – Removing the Multi-Rib Clutch Coil

SPECIFICATIONS

FASTENER TORQUE

	N•m	Ft. Lbs.
HR-6 Compressor		
Front Support Brace-To-Compressor Bolts	50	37
Front Support Brace-To-Engine Bracket	33	24
Engine Bracket-To-Engine Block Bolts	33	24
Rear Support Brace-To-Compressor Bolts	25	19
All Other HR-6 Mounting Bolts and Nuts	33	24
R-4 Compressor		
Compressor Suction and Discharge Connector Bolt	24	18
Oil Drain Screw	17	13
Cycling Pressure Switch	10	90*
Rear Support Brace-to-Compressor Bolts (R/V 4.3L, 5.0L and 5.7L Engines)	54	40
Inner Bracket Assembly-to-Engine Support Nut (R/V 4.3L, 5.0L and 5.7L Engines)	24	18
Inner Bracket Assembly-to-Compressor Mounting Bolts (R/V 4.3L, 5.0L and 5.7L Engines)	51	38
Support Bracket Bolts	83	61
All Other R-4 Mounting Bolts and Nuts	33	24

GMTB-3043-2A

A/C ELECTRICAL

Component	Volts	Amps. (Cold)	RPM (Cold)
Blower Motor R/V All Weather	12.0	12.8 Max.	3400 Min.
R/V Rear Interior Roof Mounted	12.0	13.7 Max.	3400 Min.
Compressor Clutch Coil at 80°F	—	3.70 Ohms	—
Compressor Clutch Coil at 80°F	12.0	3.33	—
Belt Tension	See Tune-up Chart		
Fuse Block R/V	—	25	—
In-Line R/V	—	20	—

TB-3044-2A

SPECIAL TOOLS

1. 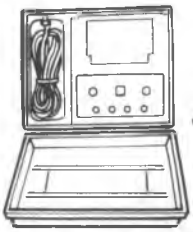 J 21213-A

2. J 5420

3. J 6083

4. 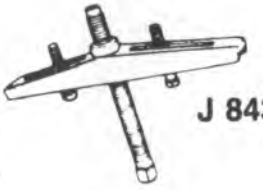 J 8433

5. J 34019

6. 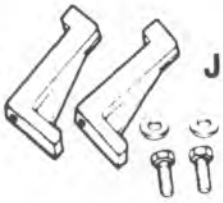 J 24092

7. J 9401-B

8. J 9398-A

9. J 9399

10. J 33026

11. J 9481-A

12. J 9459

13. J 25030

14. J 25031

15. J 38505

16. J 26271-A

17. J 8433-3

18. J 8092

19. J 33017

20. J 33019

21. J 33020

22. J 9481-A

1. Temperature Tester
2. Straight Connector
3. Snap Ring Pliers (#24 Internal)
4. Compressor Pulley Puller
5. Hub and Drive Plate Assembly Remover
6. Pulley Hub Adapter Set (Used with 8433)
7. Hub and Drive Plate Remover/Installer
8. Rotor Bearing Remover
9. 9/16-inch Thin Wall Socket
10. Compressor Holding Fixture
11. Pulley Bearing and Pulley Installer
12. 90° Brass Adapter
13. Clutch Hub Holding Tool
14. Rotor and Bearing Puller with Guide
15. Leak Detector
16. Rotor and Bearing Installer
17. Forcing Screw
18. Driver Handle
19. Pulley and Bearing Assembly Installer
20. Bearing Staking Tool
21. Pulley Puller
22. Pulley Bearing Installer

V0568

SECTION 2

FRAME AND SHEET METAL

CONTENTS

SUBJECT	PAGE
Frame and Bumpers	2A-1
Sheet Metal and Fiberglass	2B-1

SECTION 2A

FRAME AND BUMPERS

***NOTICE:** When fasteners are removed, always reinstall them at the same location from which they were removed. If a fastener needs to be replaced, use the correct part number fastener for that application. If the correct part number fastener is not available, a fastener of equal size and strength (or stronger) may be used. Fasteners that are not reused, and those requiring thread locking compound will be called out. The correct torque value must be used when installing fasteners that require it. If the above conditions are not followed, parts or system damage could result.*

CONTENTS

SUBJECT	PAGE
Description	2A- 2
Frames	2A- 2
Minimizing Frame Service	2A- 2
Checking Frame Alignment	2A- 2
Diagnosis of the Frame	2A- 3
Frame On-Vehicle Service	2A- 5
Straightening Frames	2A- 5
Repairing Cracks	2A- 5
Welding	2A- 6
R/V Model Bumpers On-Vehicle Service	2A- 6
Front Bumper Replacement	2A- 6
Rear Bumper Replacement (Utility Vehicle and Suburban)	2A- 8
Rear Bumper Replacement (Bonus Cab, and Crew Cab)	2A-10
Rear Step Bumper Replacement	2A-12
Rear Bumper License Plate Bracket Replacement	2A-12
Dead Weight Platform Hitch Replacement (Utility Vehicle and Suburban)	2A-13
Weight Distribution Platform Hitch Replacement (Suburban Only)	2A-14
Weight Distribution Platform Hitch Replacement (Utility Vehicle Only)	2A-14
P-Model Bumpers On-Vehicle Service	2A-15
Front Bumper Replacement	2A-15
Front Bumper Replacement (With RPO FS3 Front Axle)	2A-16
Specifications	2A-18

DESCRIPTION

FRAMES

Proper frame alignment is important to assure normal life and functioning of many other parts of the vehicle. If the vehicle has been involved in a fire, collision, or has been overloaded, there is cause to check the frame alignment. If, for any other reason, alignment is suspected it should be checked. A procedure for this is described later in this section under "Checking Frame Alignment."

It is possible that certain conditions make the frame appear to be out of alignment when, in fact, it is not. These conditions are also described under "Checking Frame Alignment."

Terms used later in this section are briefly defined below:

1. SECTION MODULUS — This is a measure of the strength of a frame, based on height, width, thickness and shape of the side rails. It does not account for the strength of the material used in the frame.
2. YIELD STRENGTH — This is a measure of the strength of the material from which the frame is made. It is the maximum load measure in kPa (psi) that can be placed on a material and still have it return to its original shape.
3. RESISTANCE TO BENDING MOMENT (RBM) — This is a single measure of frame strength that accounts for both the section modulus and the strength of the material used. It is the product of section modulus and yield strength.
4. SAG — This refers to a frame or side rail that is bent down from where it should be.
5. BUCKLE — This refers to a frame or side rail that is bent up from where it should be.
6. DIAMOND — This refers to the condition where one entire frame rail is moved forward from, or to the rear of its correct alignment with the other rail.
7. TWIST — This refers to the condition where the entire frame has been twisted. One rail will basically slope up while the other rail will basically slope down.
8. SIDEWAYS — This refers to a side rail that is bent to the side of where it should be.
9. TRACKING — This refers to the alignment of the vehicle axles with each other. A misaligned frame can cause improper tracking. If the vehicle is tracking correctly, all axles will be parallel to each other and perpendicular to the center line of frame.
10. WEB — The vertical part of a channel-type frame rail.

MINIMIZING FRAME SERVICE

Generally, frame service can be minimized or eliminated by minimizing the concentration of stress in small areas of the frame.

1. Vehicles should be used only for those purposes for which they were designed.
   - They should not be overloaded.
   - They should be loaded evenly; localized loads should be avoided.
   - Do not operate the vehicle on extremely rough terrain.
   - Take into account the forces that will be placed on a frame from the operation of equipment such as snow plows when picking a frame for a new vehicle or reinforcing a frame.
2. Follow recommended practices when repairing a frame or when mounting a body or equipment on a frame.
   - Avoid sudden changes in the section modulus.
   - Do not drill holes in the frame rail flanges.
   - Space holes in the web section of a rail at least 13 mm (1/2-inch) from one another.
   - Use existing holes whenever possible.
   - Do not cut holes with a torch.
   - Do not overheat the frame rails.
   - Avoid welding on the flanges.
   - Do not allow four or more holes to exist on the same vertical line of the web.
   - Holes made in a reinforcement should be placed a distance of at least two times the material thickness from the edge of the reinforcement.

CHECKING FRAME ALIGNMENT

The main parts of a frame are the side rails and crossmembers. The rails carry the load and the crossmembers stabilize the rails.

Types of frame misalignment can be divided into five groups. The five groups are sag, buckle, diamond, sideways, and twist. For a brief definition of these terms, refer to "Description" at the beginning of this section.

A misaligned frame rail may have moved forward from, up or down from, or to the side of where it should be. These possibilities must be checked.

The easiest way to check frame alignment is with gages made for this purpose. Detailed instructions are normally supplied with gages at the time of purchase. Therefore, instructions for gage use are not given in this manual.

It is possible to check certain portions of frame alignment without the proper gages. The procedure is described later in this section.

Whether alignment is checked with or without gages, the vehicle must be parked on a level section of floor.

Certain conditions call for preliminary checks before actually checking the frame. Suspension or axle problems may make it appear that the vehicle frame is out of alignment. If an axle has shifted. "Diamond" or "Sideways" may appear to exist when, in fact, they do not. A weak spring may make the vehicle appear to have a twisted frame.

A visual inspection of the top and bottom flanges of each rail may reveal the specific area where sag or buckle exists. In the case of sag, wrinkles may appear on the top of the upper flange; such wrinkles are definite evidence of sag. Wrinkles on the bottom of the lower flange are definite evidence of buckle.

DIAGNOSIS OF THE FRAME

PROBLEM	POSSIBLE CAUSE	CORRECTION
Sag	1. Loads greater than the frame is designed to carry. 2. Uneven load distribution. 3. Abrupt changes in section modulus. (For a brief definition of section modulus, refer to "Description" at the beginning of this section. 4. Improper body, or accessory, mounting: — Holes drilled in the flange of the frame rail. — Too many holes in the web section of the rail. — Holes in the web section which are too close to each other. — Four or more holes in the same vertical line of the rail web. — Welds on the flange, particularly across the flange or along its edge. — Cutting holes in the rail with a torch. — Cutting notches anywhere on the rails. 5. A fire involving the vehicle. 6. A collision involving the vehicle. 7. The use of equipment for which the frame has not been designed or reinforced.	1-7. Straighten and reinforce the frame as described later in this section. Refer to "Straightening Frames."
Buckle	1. The use of equipment such as snow plows for which the frame was not designed. 2. A collision involving the vehicle. 3. A fire involving the vehicle. 4. In addition to these causes, refer to possible causes 3 and 4 under "Sag." These may contribute to "Buckle."	1-4. Straighten and reinforce the frame as described later in this section. Refer to "Straightening Frames."
Sidesway	1. A collision involving the vehicle. 2. A fire involving the vehicle. 3. The use of equipment such as snow plows for which the frame was neither designed nor properly reinforced. 4. In addition to these causes, refer to possible causes 3 and 4 under "Sag." These may be contributing factors.	1-4. Straighten and reinforce the frame as described later in this section. Refer to "Straightening Frames."
Diamond	1. A collision involving the vehicle. 2. Towing another vehicle with a chain attached to one corner of the frame.	1-2. Straighten and reinforce the frame as described later in this section. Refer to "Straightening Frames."
Twist	1. An accident or collision involving the vehicle. 2. Operating the vehicle in very rough terrain.	1-2. Straighten and reinforce the frame as described later in this section. Refer to "Straightening Frames."
Improper Tracking	1. Frame is out of alignment. 2. Front or rear axle has shifted. 3. Incorrect wheel alignment may make the vehicle appear to be tracking incorrectly.	1. Straighten the frame as described later in this section. 2. Realign and secure the axle. 3. Align the wheels. Refer to FRONT END ALIGNMENT (SEC. 3A) of this manual.

GMTB-3123-2A

DIAGNOSIS OF THE FRAME (CONT.)

PROBLEM	POSSIBLE CAUSE	CORRECTION
Cracks In The Web Of The Rails	1. Loose crossmember attaching bolts.	1. Replace, or weld and reinforce rail. Ream bolt holes and replace with larger bolts if necessary. Retighten bolts.
	2. Concentration of stress that may result from many different factors. Refer to "Sag" under "Diagnosis" previously described in this chart. Also refer to "Minimizing Frame Damage" later in this section.	2. Replace, or weld and reinforce the rail. Refer to the appropriate heading, later in this section.

GMTB-4204-A

DETERMINING THE FRAME CENTERLINE (Figure 1)

1. Move the vehicle to a level, well-lighted section of the floor.
2. Make a diagram of the frame on the floor beneath the vehicle as follows:
   a. Using a plumb bob, transfer points 1, 2, 11, 12 from the inside of the web to the floor. Mark the points (figure 1).
   b. Using a plumb bob, transfer the remaining points from the outside of the web to the floor. Mark the points. Be sure to use points from the same place on both the right and left frame rail.
3. Move the vehicle away from the points on the floor.
4. Measure the distance between points 1 and 2. This distance should be 704.85 mm (27.75-inch) for the standard front axle, and 847.25 mm (33.75-inch) if equipped with a 5000# I-Beam Front Axle.
5. Measure the distance between points 11 and 12. This distance should be 847.25 mm (33.75-inch). If both the measurements in steps 4 and 5 were correct, continue the procedure. If the measurements are not correct, refer to "Horizontal Check" step 2, and mark the centerline through the intersection of two sets of diagonals that have equal measurements.

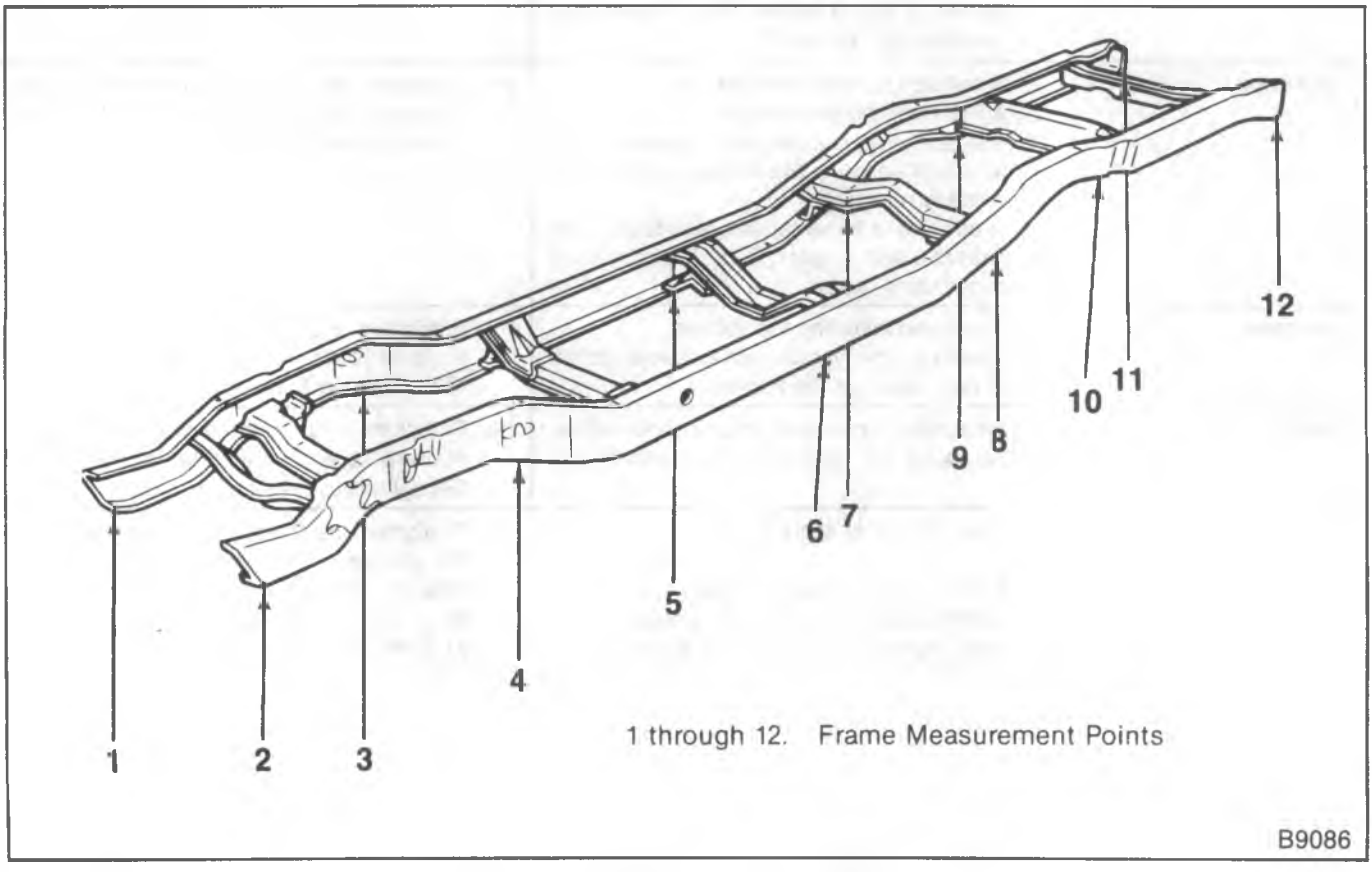

Figure 1—R/V and P-Model Frames

6. Make a mark on the floor exactly halfway between points 1 and 2. Make a similar mark between points 11 and 12.
7. Use a chalk line to mark a line through the points. This is the centerline of the frame.

HORIZONTAL CHECK

1. Measure the distance between the frame rails, and the centerline at points 3-10. Each pair of corresponding points should be an equal distance from the centerline within 3 mm (1/8-inch). Example: Points 3 and 4 should measure equally from the centerline as should points 5 and 6, 7 and 8, and points 9 and 10.
2. Measure diagonally from point 1 to point 6, and from point 2 to point 5. Mark the floor where the diagonals pass the centerline. The diagonals should measure the same distance within 5 mm (3/16-inch), and should cross at the centerline. If the frame is within specifications, the frame within these points is properly aligned.
3. Repeat step 2 on other pairs of diagonals until the entire frame has been checked. Example: Point 3 to point 10 and point 4 to point 9 or point 5 to point 12 and point 6 to point 11, etc.
4. Refer to "Straightening Frames" to repair any damage that is found.

FRAME ON-VEHICLE SERVICE

STRAIGHTENING FRAMES

Frame straightening can be complicated and usually requires special equipment. It should be attempted by competent personnel only.

A complete analysis of the condition of the frame should be made before any steps are taken to straighten it. Analyzing the cause of failure will help determine the correct sequence of steps in the repair. (Refer to "Possible Causes" under "Diagnosis" and "Minimizing Frame Service" previously outlined in this section.) Corrective procedures should be set up to reverse the flow of the damaging forces. In many instances, to reverse the flow of forces, pressure must be applied from different directions at the same time.

Careful use of controlled heat is important. Too much or too little heat, or the improper application of heat, is a major source of trouble. Frame heating should be done with a large sized tip (multi-hole heating tip) and a neutral flame should be used (oxygen adjust opened just enough to remove the feathers or stringers from the blue center at tip of torch). Heat the area that will be stretched as frame is straightened. Heat the area AFTER SUFFICIENT PRESSURE HAS BEEN EXERTED to cause a slight checking, or silvery cracks, to appear on the surface of the metal. Gradually increase the pressure while heating. Do not heat beyond 606°C (1200°F). A red glow indicates that the material is overheated. Overheating will cause distortion and stretching, as well as a change in the characteristics of the metal.

REPAIRING CRACKS

Two common types of cracks are shown in figure 2. The straight crack will normally start from the edge of a flange. It will go across the flange and through the web section of a rail. Finally, it will continue through the other flange. This type of crack may result from high concentrations of stress in small areas of the frame, excessive bending moment, and torsional loading. (Refer to "Minimizing Frame Service", previously outlined in this section.)

Sunburst crack(s) will radiate out from a hole in the web section of a rail or crossmember. They are caused by high loads being applied at a mounting bracket or crossmember which is not securely or properly attached to the rail.

If cracks occur to both the rail and reinforcement at a particular area of the frame, they must be repaired separately. The flanges must react independently to prevent localized stress concentration. Use a copper spacer between the flanges of cracked base rail flanges and reinforcement flanges.

Crossmember mounting flange cracks may be repaired in the same manner as side rail cracks. However, weld bead should be built up to provide a good smooth radius. If a crossmember is greatly damaged replace it.

It may be necessary to align the frame and level the rails before repairing the frame.

1. Remove any equipment that will interfere with access to the crack.
2. Locate the extreme end of the crack and drill a 6 mm (0.25-inch) hole.

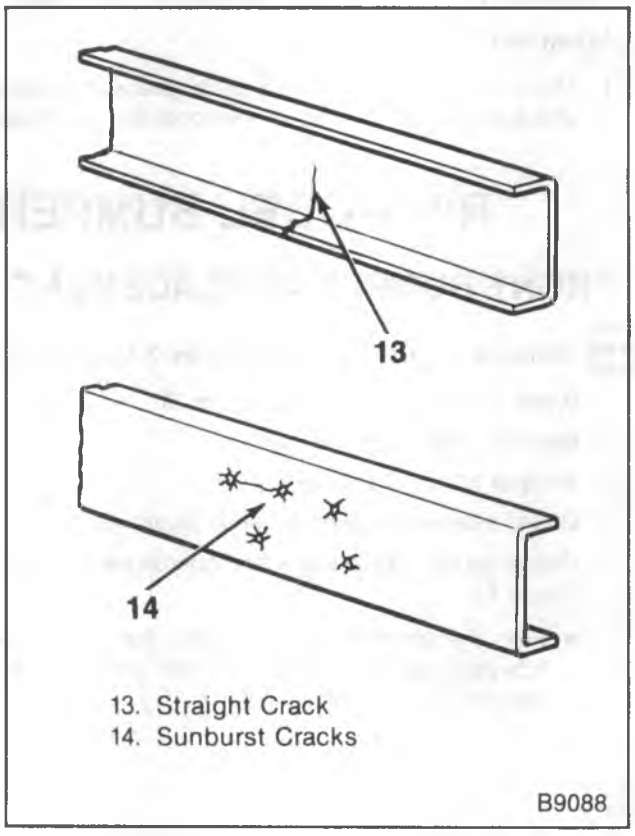

Figure 2—Types of Frame Cracks

3. "V" grind the entire length of the crack from the starting point to the 6 mm (0.25-inch) hole at the extreme end.
4. Open up the bottom of the crack 2 mm (1/16-inch) to allow good penetration of the weld. (A hacksaw blade may be used for this.)
5. Weld with proper electrode and proper welding techniques. Refer to "Welding" outlined later in this section for tips on welding.
6. Grind the weld smooth on both the inside and the outside of the rail or crossmember. Be extremely careful to eliminate weld build-up or notches on the edge of the flange.

WELDING

Improper techniques are the cause of many weld and/or frame failures. The following information points out potential areas of difficulty and provides some general guidelines for successful frame welding.

Most weld failures occur at the end of the weld in areas of the frame that are under high stress. By eliminating the ends of a weld, failures can be reduced; this can be done by making a hole or slot in the part to be attached and then using a fillet weld around a slot or plug weld. Do not leave a notch at the end of a weld.

Over-welding can be harmful, especially if it is in an area of the frame that receives high concentrations of stress.

Small cracks in a crossmember may be welded. (Refer to "Repairing Cracks" previously outlined in this section.)

When welding:

1. The frame is covered with a protective wax coating. Use a wire brush to remove any concentration of wax before welding. When finished, recoat the area with new wax.
2. Do not use oxyacetylene welding equipment.
3. Whenever possible, use smaller diameter electrodes and make several passes; this is preferred to using a large diameter electrode and making fewer passes.
4. Do not use more heat than is necessary to give good penetration.
5. Make sure the weld is free from craters and undercuts.
6. Make sure scale is removed from each successive pass.
7. If repairing a crack, grind the surface of the weld flush with the parent material.
8. When mounting accessories, do not weld across the flanges.
9. When mounting accessories, do not weld within 19 mm (3/4-inch) of a flange.
10. Do not weld up to the edge of a part being welded to a frame. Leave 6 mm (0.25-inch) between the end of the weld and the edge of the part.
11. Do not weld cast brackets to the frame.
12. Do not weld the flanges of cracked reinforcements and base rails together.
13. Do not attach the ground cable to the engine. Connect the welding machine ground cables as close to the working area as possible.
14. Do not disconnect the vehicle battery.
15. Do not get the welding cables near the vehicle wiring. Avoid direct contact between the welding cables and any part of the vehicle.

R/V MODEL BUMPERS ON-VEHICLE SERVICE

FRONT BUMPER REPLACEMENT

Remove or Disconnect (Figures 3 through 6)

1. Brace to bumper nuts (52) (figure 3).
2. Bracket to bumper nuts (53).
3. Bumper from the vehicle.
4. Guard assemblies (where used) (figure 4).
5. Rub strips from the bumper and guards (where used) (figure 6).
   - From the rear of the bumper, press the tangs of the rub strip together, and push the strip from the bumper and/or guard.
6. Bumper bolts (56 and/or 58).
7. Brace bolts and washers from the inside of the frame rail (figure 6).
8. Braces (54).
9. Bracket bolts, washers, and nuts (64, 65 and 66) from the frame.
10. Tow hooks (70) (where used).
11. Brackets (55).

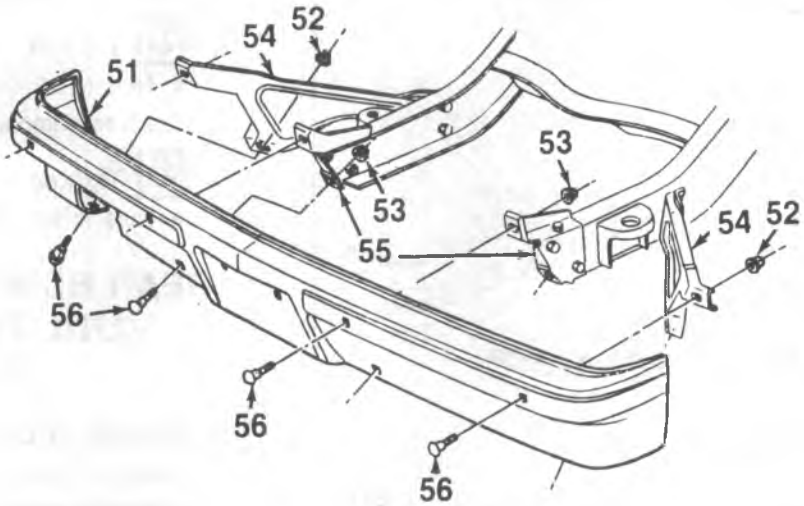

51. Bumper Bar
52. Nut
53. Nut
54. Brace
55. Bracket
56. Bolt

Figure 3—R/V Front Bumper Components

Install or Connect (Figures 3 through 6)

NOTICE: For steps 2, 3, 8 and 9, see "Notice" on page 2A-1 of this section.

1. Brackets and tow hooks (where used) to the frame rails.
   - On vehicles without tow hooks, install the bolts and washers through the brackets and through the outside of the frame rail.
   - On vehicles with tow hooks, install the tow hook bolts and washers from inside the frame rail, then through the brackets and the tow hooks. Install the top bracket bolts and washers through the bracket, and into the top rail flange.
2. Washers and nuts to the bolts.

   Tighten
   - Nuts to 95 N•m (70 ft. lbs.).
3. Brace bolts and washers through the frame rails and into the braces.

   Tighten
   - Bolts to 50 N•m (37 ft. lbs.).
4. Bumper bolts (56) onto the bumper.
5. Rub strips to the bumper and guards (where used).

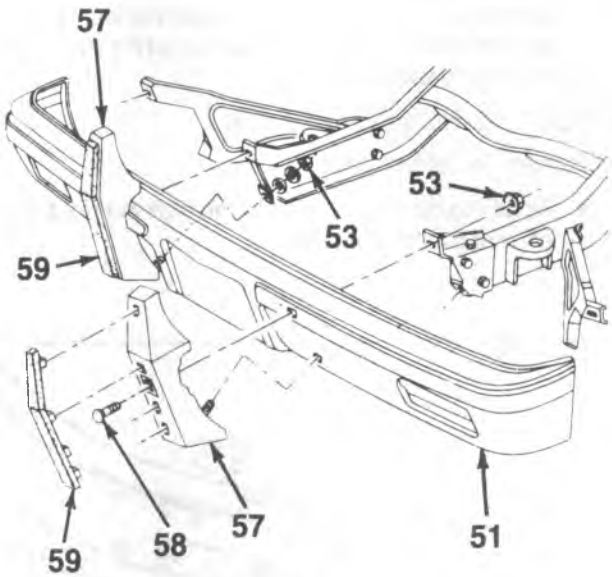

51. Bumper Bar
53. Nut
57. Guard
58. Bolt
59. Rub Strip

Figure 4—R/V Front Bumper Guards

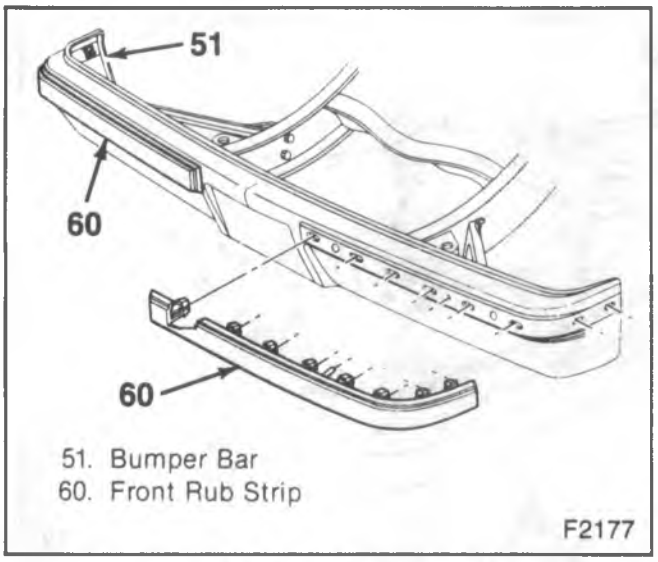

Figure 5—R/V Front Bumper Rub Strip

- Place the tangs of the strips onto the slots in the bumper or guard. Using a rubber mallet, set the tangs in place starting at the center of the strip, and working toward each end.

6. Guard assemblies (where used).
7. Bumper to the vehicle.
   - Install the bumper with bolts through the right and left braces, and brackets.
8. Bracket to bumper nuts (53).

   Tighten
   - Nuts to 90 N•m (66 ft. lbs.).
9. Brace to bumper nuts (52).

   Tighten
   - Nuts to 90 N•m (66 ft. lbs.).

REAR BUMPER REPLACEMENT (UTILITY VEHICLE AND SUBURBAN)

Remove or Disconnect (Figure 7)

1. Brace to bumper nuts (71).
2. Bracket to bumper nuts (74).
3. Rear bumper.
4. Filler panel bolts (figures 9 and 10).
5. Filler panel.
6. Rub strips from the bumper (where used) (figure 10).
   - From the rear of the bumper, press the tangs of the bump strip together, and push the strip from the bumper.
7. Bumper bolts (82).
8. Brace nuts, washers, and bolts (75, 76 and 80).
9. Braces (72).
10. Bracket nuts, washers, and bolts (77, 78 and 79).
11. Brackets (73).

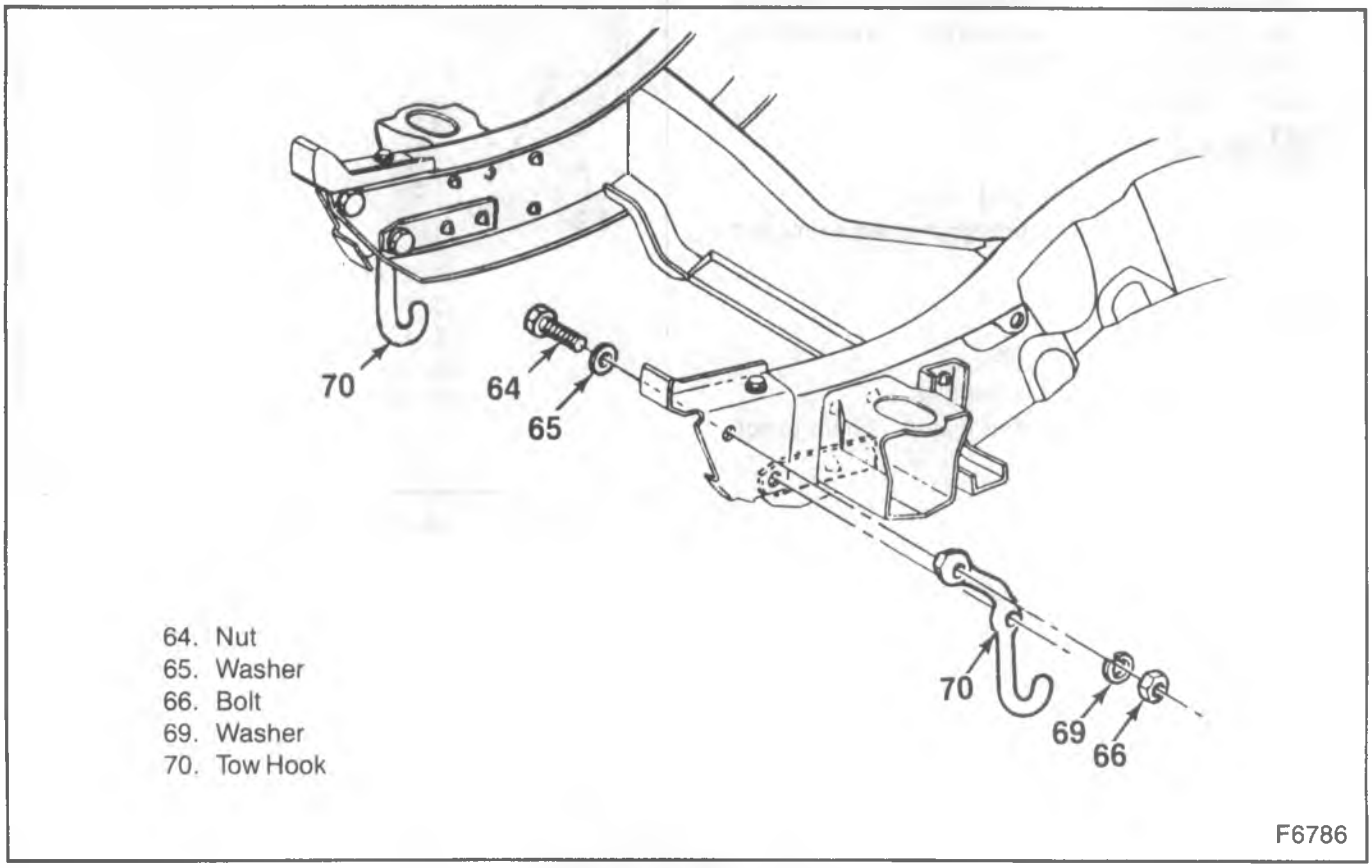

Figure 6—R/V Tow Hooks

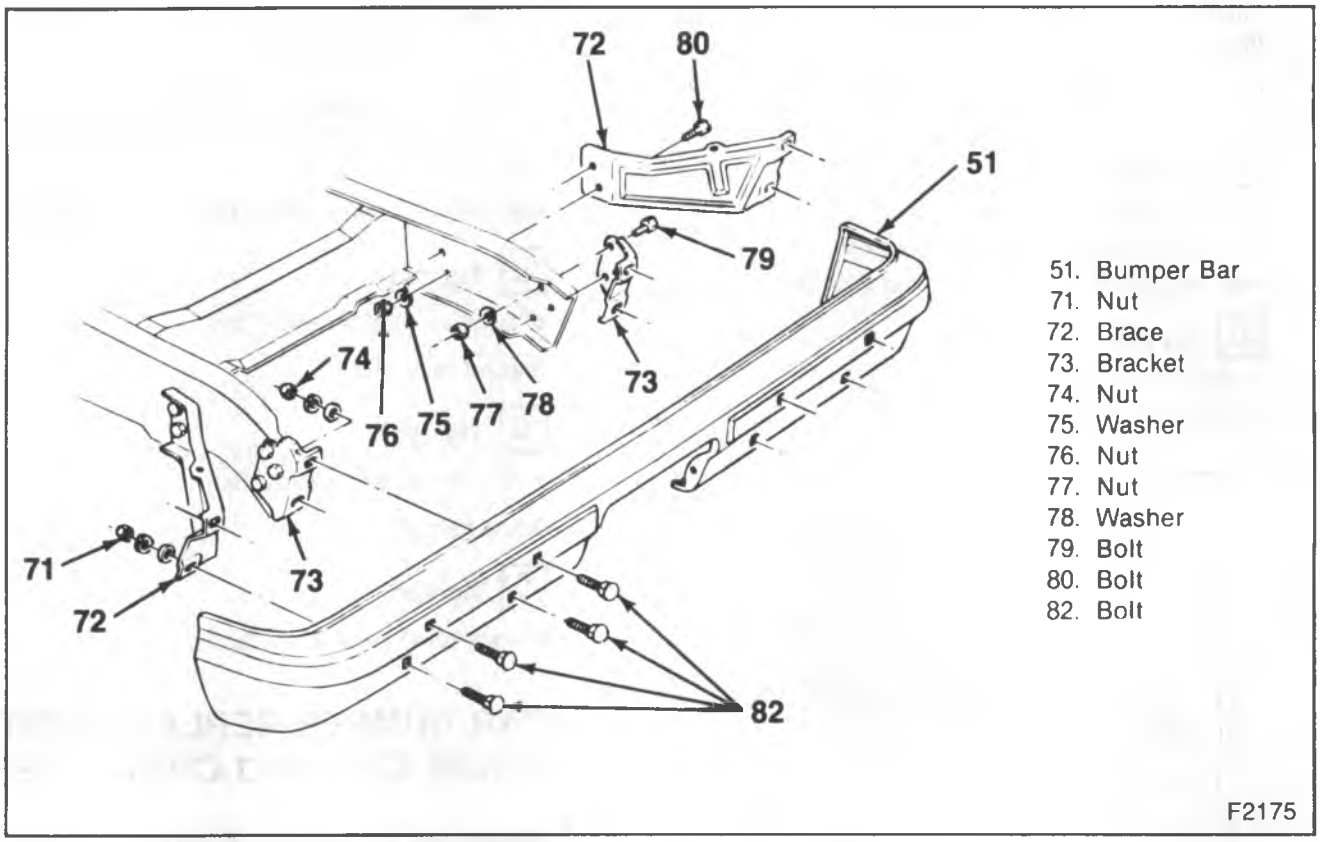

Figure 7—Utility Vehicle and Suburban Rear Bumper Components

Install or Connect (Figures 7 through 10)

NOTICE: For steps 2, 4, 8, 10, 14, 15 and 16 see "Notice" on page 2A-1 of this section.

1. Brackets to the frame rails (73).
2. Bracket bolts, washers, and nuts (77, 78 and 79).

   Tighten

   - Nuts to 95 N•m (70 ft. lbs.)
3. Braces to the frame rails (72).
4. Brace bolts, washers, and nuts (75, 76 and 80).

   Tighten

   - Nuts to 95 N•m (70 ft. lbs.).
5. Bumper bolts to the bumper (82).
6. Rub strips to the bumper (where used).
   - Place the tangs of the strips onto the slots in the bumper guard. Using a rubber mallet, set the tangs in place starting at the center of the strip, working toward each end.

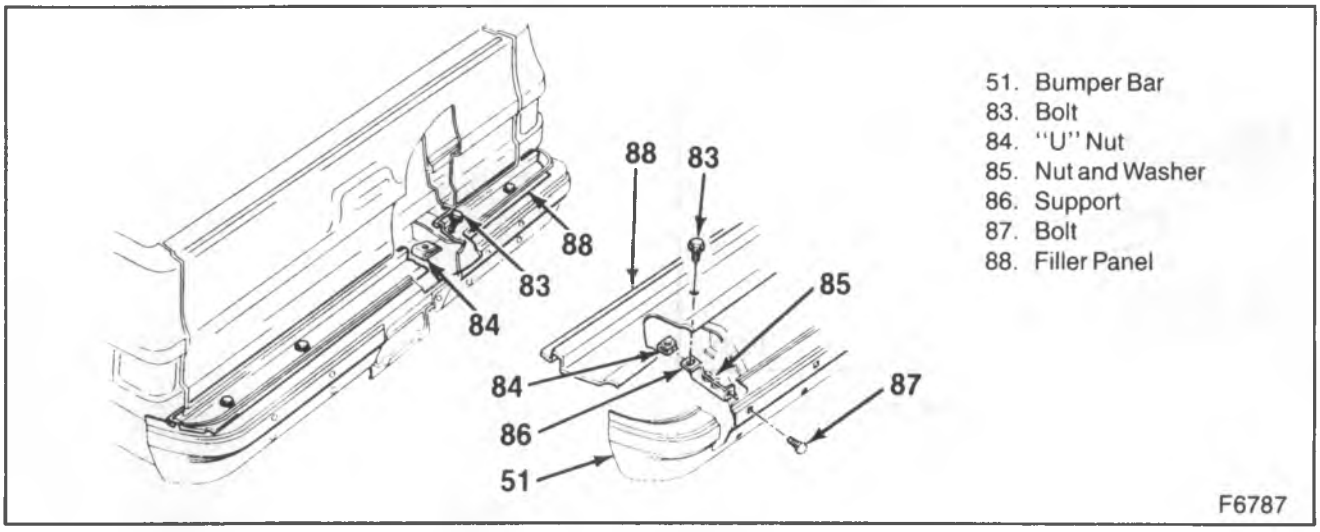

Figure 8—Rear Bumper Filler Strip

7. Filler panel supports (86) (Utility vehicle only) (figure 8).
8. Filler panel bolts through the panel and into the support "U" nuts.

Tighten

- Bolts to 10 N•m (89 in. lbs.).

9. Filler panel (Suburban only) (figure 9).
10. Bolts through the filler panel, and into the platform.

Tighten

- Bolts to 2.8 N•m (25 in. lbs.).

11. Bumper to the vehicle.

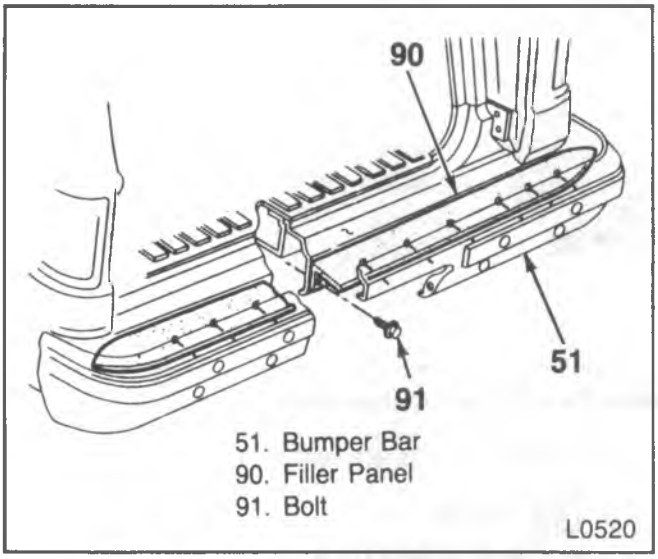

Figure 9—Rear Bumper Center Filler

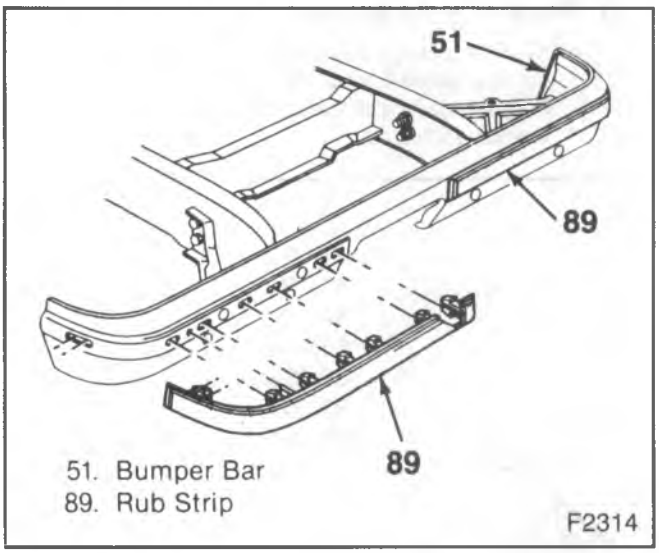

Figure 10—Rear Bumper Rub Strip

12. Bumper bolts (82) into the braces, and brackets.
13. Filler panel (Utility vehicles only).
    - Place the filler panel behind the bumper, and place the supports onto the bumper bolts behind the braces.
14. Filler panel bracket bolts (Utility vehicle only).

Tighten

- Bolts to 10 N•m (89 in. lbs.).

15. Bracket nuts (74).

Tighten

- Nuts to 41 N•m (30 ft. lbs.).

16. Brace nuts (71).

Tighten

- Nuts to 41 N•m (30 ft. lbs.).

REAR BUMPER REPLACEMENT (BONUS CAB AND CREW CAB)

Remove or Disconnect (Figures 11 and 12)

1. Brace nuts (93), spring washers, and washers at the bumper.
2. Bracket nuts (99), spring washers and washers at the bumper.
3. Rear bumper from the vehicle.
4. Bumper bolts (106).
5. Gravel deflector nuts (107) and bolts (81) (where used) (figure 13).
6. Gravel deflectors (105).
7. Brace to frame nuts (100), spring washers (102), and bolts (104).

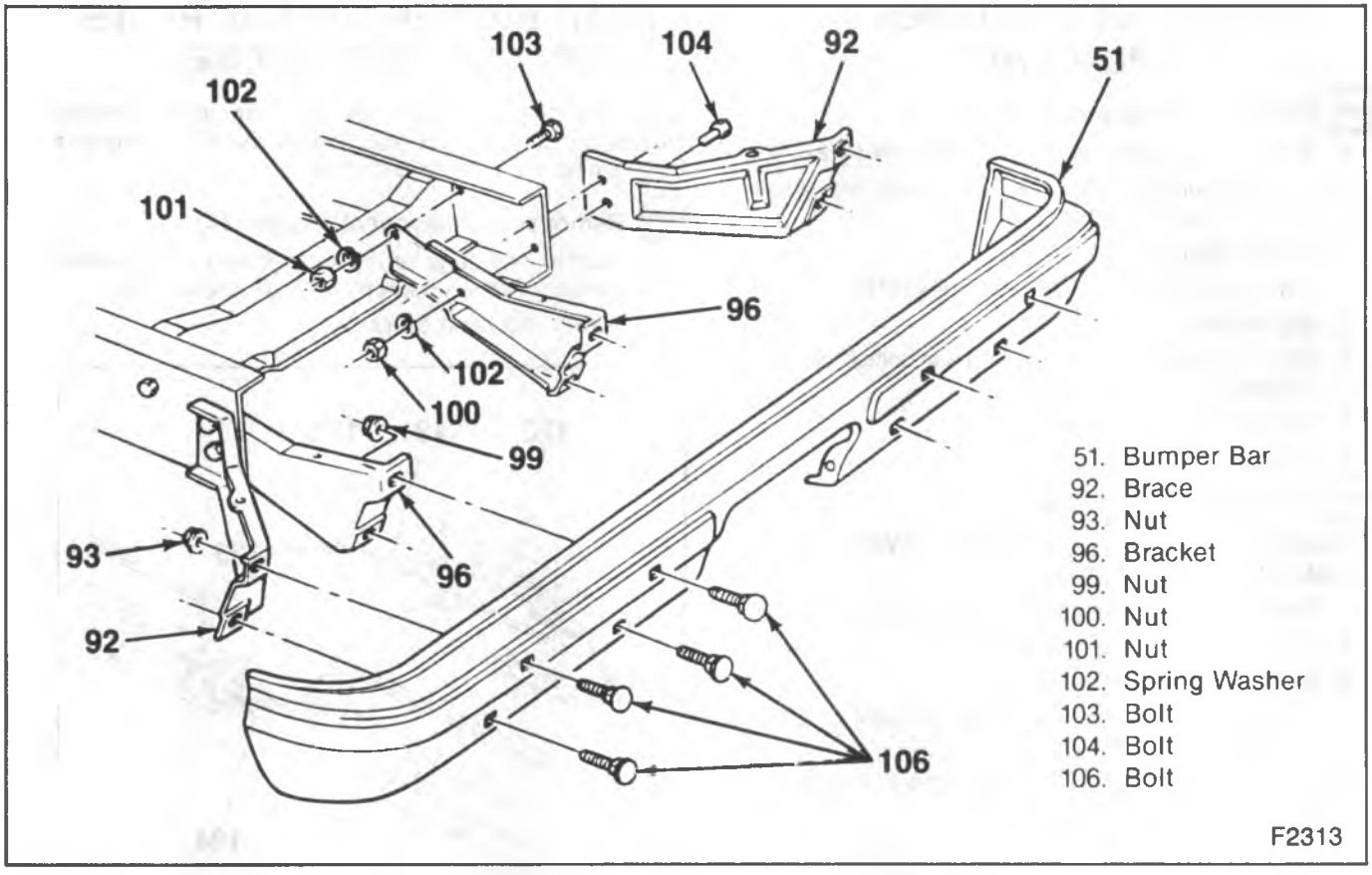

Figure 11—Bonus Cab and Crew Cab Rear Bumper Components

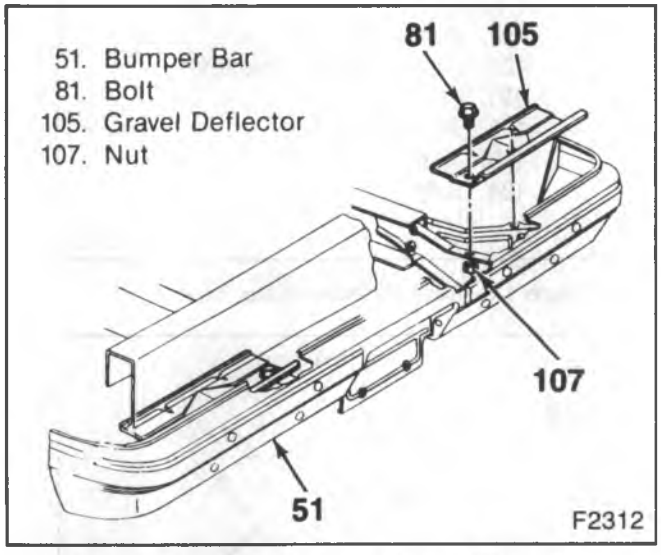

Figure 12—Rear Bumper Gravel Deflector

8. Braces (92).
9. Bracket to frame rail nuts (101), spring washers (102) and bolts (103).
10. Brackets (96).

Install or Connect (Figure 11)

NOTICE: For steps 2, 4, 6, 10 and 11, see "Notice" on page 2A-1 of this section.

1. Brackets to the frame rails.
2. Bolts (103), spring washers (102), and nuts (101).

   Tighten

   - Nuts to 95 N•m (70 ft. lbs.).
3. Braces to the frame rails.
4. Bolts (104), spring washers (102), and nuts (100).

   Tighten

   - Nuts to 95 N•m (70 ft. lbs.).
5. Gravel deflectors (where used) (figure 13).
6. Nuts (107) and bolts (81).

   Tighten

   - Nuts to 10 N•m (89 in. lbs.).
7. Bumper bolts (106) onto the bumper.
8. Rear bumper.
9. Bumper bolts through the brackets and braces.
10. Bracket washers, spring washers, and nuts (99) to the bumper.

    Tighten

    - Nuts to 90 N•m (66 ft. lbs.).
11. Brace washers, spring washers, and nuts (93) to the bumper.

    Tighten

    - Nuts to 90 N•m

REAR STEP BUMPER REPLACEMENT

Remove or Disconnect (Figure 13)

1. Bracket to bumper nuts (111), and bolts (112).
2. Brace to bumper nuts (119), spring washers, washers, and bumper bolts.
3. Bumper from the vehicle.
4. Brace to frame nuts (108) and bolts (110).
5. Braces (54).
6. Bracket reinforcement nuts (115) and bolts (109) (and washers (114) where used).
7. Bracket reinforcements (113).
8. Brackets (55).

Install or Connect (Figure 13)

NOTICE: For steps 4, 6 and 7, see "Notice" on page 2A-1 of this section.

1. Brackets (55) and braces (54) to the frame.
2. Bolts (110) and nuts (108) loosely.
3. Bracket reinforcements (113).
   - The reinforcements are marked as right or left on their inboard sides.
4. Bolts (109) and nuts (115), and washers (114) (where used).

   Tighten
   - Reinforcement nuts to 70 N•m (52 ft. lbs.).
   - Bracket and brace nuts to 70 N•m (52 ft. lbs.).
5. Bumper to the vehicle.
6. Bumper to brace bolts (116), washers, spring washers, and nuts (119).

   Tighten
   - Nuts to 70 N•m (52 ft. lbs.).
7. Bumper to bracket bolts (112) and nuts (111).

   Tighten
   - Nuts to 70 N•m (52 ft. lbs.).

REAR BUMPER LICENSE PLATE BRACKET REPLACEMENT

Suburban models with weight distribution platform hitches should be raised on a hoist to reach the fasteners from behind the bumper and hitch.

Remove or Disconnect (Figure 14)

1. License plate bracket to bumper nuts (123), spring washers (122), washers (121), and bolts (124).
2. Wire to the lamp assembly.

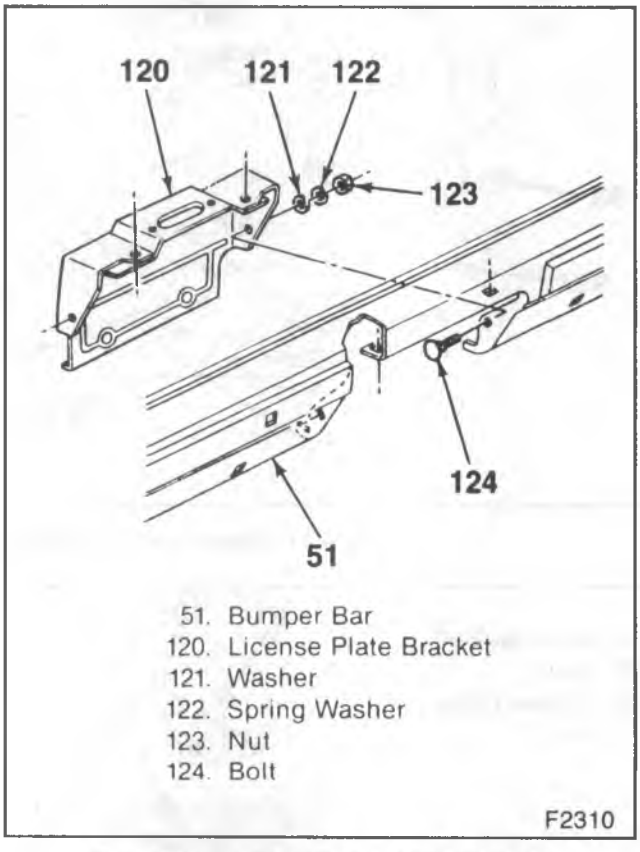

Figure 14—Rear License Plate Bracket

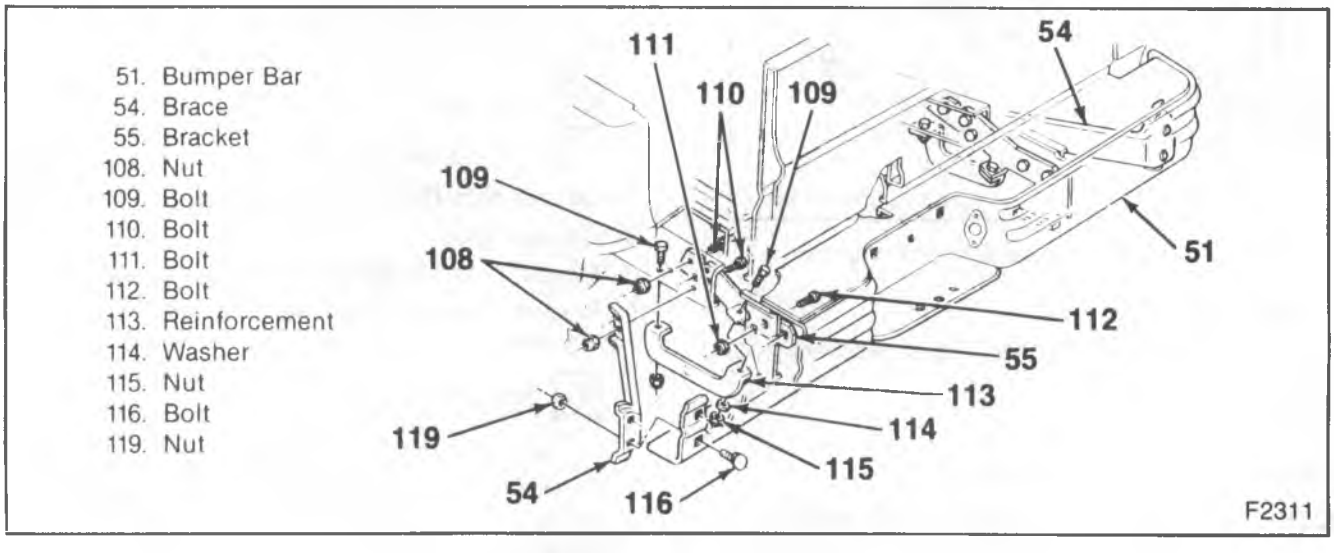

Figure 13—Rear Step Bumper Components

3. License plate bracket (120).
4. Lamp assembly from the bracket.

Install or Connect (Figure 14)

1. Lamp assembly to the bracket.
2. License plate bracket (120).

NOTICE: See "Notice" on page 2A-1 of this section.

3. License plate bracket to the bumper with bolts (124), washers and nuts.

Tighten

- Nuts to 29 N•m (21 ft. lbs.).

4. Wire to the lamp assembly.

DEAD WEIGHT PLATFORM HITCH REPLACEMENT (UTILITY VEHICLE AND SUBURBAN)

Remove or Disconnect (Figures 15 and 16)

1. Bracket assembly nuts, washers, and bolts from the frame.

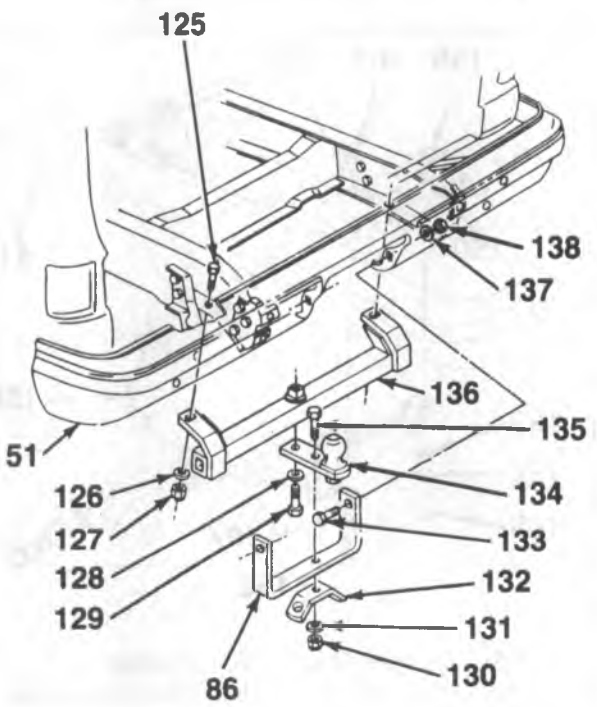

51.	Bumper Bar	131.	Washer
86.	Support	132.	Chain Bracket
125.	Bolt	133.	Bolt
126.	Washer	134.	Bar Assembly
127.	Nut	135.	Bolt
128.	Washer	136.	Bracket Assembly
129.	Bolt	137.	Washer
130.	Nut	138.	Nut

F2309

Figure 15—Suburban Dead Weight Platform Hitch

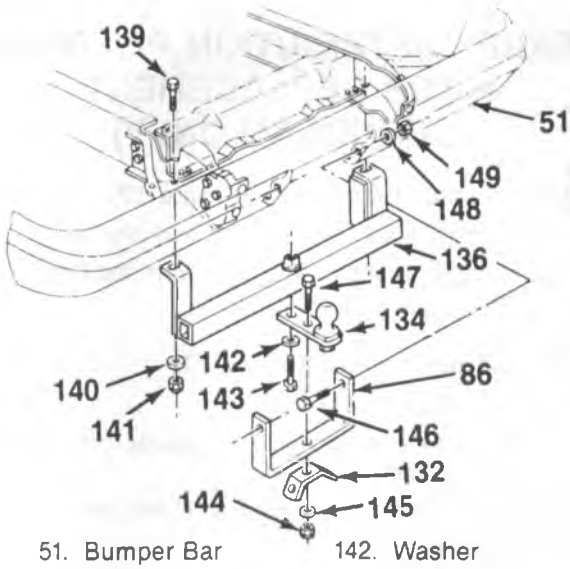

51.	Bumper Bar	142.	Washer
86.	Support	143.	Bolt
132.	Chain Bracket	144.	Nut
134.	Bar Assembly	145.	Washer
136.	Bracket Assembly	146.	Bolt
139.	Bolt	147.	Bolt
140.	Washer	148.	Washer
141.	Nut	149.	Nut

F2308

Figure 16—Utility Vehicle Dead Weight Platform Hitch

2. Support nuts, washers, and bolts from the bumper.
3. Hitch assembly.
4. Chain bracket nut, washer, and bolt.
5. Chain bracket.
6. Support.
7. Bar assembly bolt and washer from the bracket.
8. Bar assembly.

Install or Connect (Figures 15 and 16)

NOTICE: For steps 1 and 5, see "Notice" on page 2A-1 of this section.

1. Bracket assembly to the frame with bolts, washers, and nuts.

Tighten

- Nuts to 70 N•m (52 ft. lbs.).

2. Bar assembly to the support.
   - Place the bolt through the bar assembly, support and the chain bracket. Install the washer and nut loosely.
3. Support assembly bolts through the support and the bumper.
4. Washers and nuts loosely.
5. Bar assembly bolt with washer through the bar and into the bracket assembly.

Tighten

- Bar to bracket bolt to 95 N•m (70 ft. lbs.).
- Bar to support nut to 70 N•m (52 ft. lbs.).
- Support to bumper nuts to 33 N•m (24 ft. lbs.).

WEIGHT DISTRIBUTION PLATFORM HITCH REPLACEMENT (SUBURBAN ONLY)

Remove or Disconnect (Figure 17)

1. Rear bolts, washers, and nuts from the hitch.
2. Front nuts, washers, and bolts from the hitch.
3. Hitch platform from the vehicle.

Install or Connect (Figure 17)

1. Hitch platform to the vehicle.
   - There must be no contact between the platform and the rear bumper.
2. Front bolts, washers, and nuts to the hitch.
   - Assemble loosely.

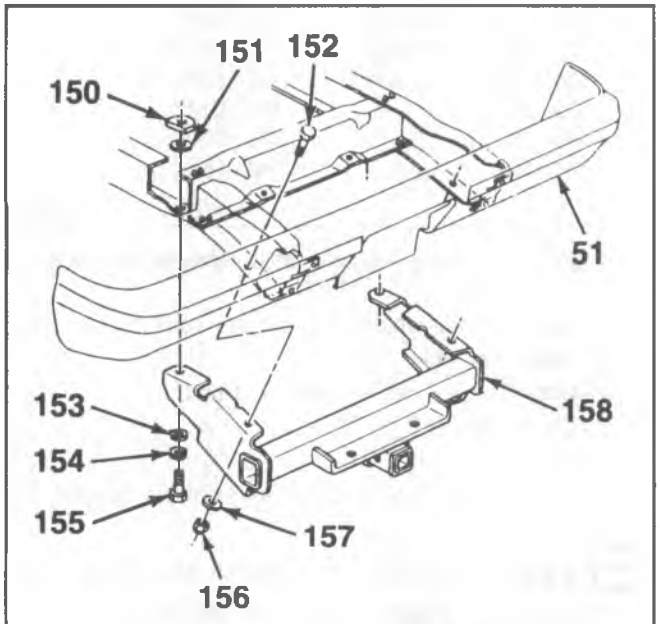

51.	Bumper Bar	154.	Spring Washer
150.	Nut	155.	Bolt
151.	Washer	156.	Nut
152.	Bolt	157.	Washer
153.	Washer	158.	Platform

F2307

Figure 17—Suburban Weight Distribution Platform Hitch Components

NOTICE: See "Notice" on page 2A-1 of this section.

3. Rear nuts, washers, and bolts to the hitch.
   - Install the nuts with the cut-off side outboard.

Tighten

- Rear bolts to 95 N•m (70 ft. lbs.).
- Front nuts to 70 N•m (52 ft. lbs.).

WEIGHT DISTRIBUTION PLATFORM HITCH REPLACEMENT (UTILITY VEHICLE ONLY)

Remove or Disconnect (Figure 18)

1. Rear bolts, washers, and nuts from the hitch.
2. Front bolts, washers, and nuts from the hitch.
3. Hitch platform from the vehicle.

Install or Connect (Figure 18)

1. Hitch platform to the vehicle.
2. Front bolts, washers, and nuts to the hitch.
   - Assemble loosely.

NOTICE: See "Notice" on page 2A-1 of this section.

3. Rear bolts, washers, and nuts to the hitch.

Tighten

- Rear bolts to 73 N•m (54 ft. lbs.).
- Front bolts to 70 N•m (51 ft. lbs.).

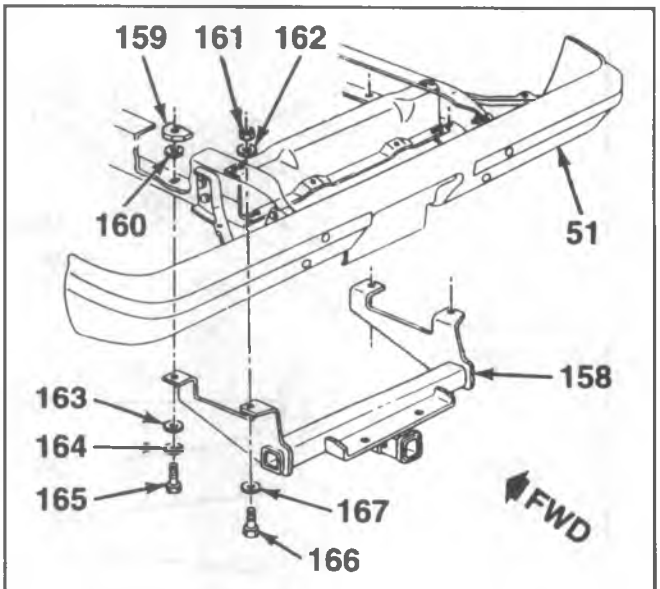

51.	Bumper Bar	163.	Washer
158.	Platform	164.	Spring Washer
159.	Nut	165.	Bolt
160.	Washer	166.	Bolt
161.	Nut	167.	Washer
162.	Washer		

L0521

Figure 18—Utility Vehicle Weight Distribution Platform

P-MODEL BUMPERS ON-VEHICLE SERVICE

FRONT BUMPER REPLACEMENT

Remove or Disconnect (Figures 19 and 20)

1. Brace to frame nuts (203), spring washers (202), washers (200 and 201), and bolts (199).
2. Bracket to frame nuts (206), spring washers (205), washers (204), and bolts (195).
3. Bumper to frame nuts (187), spring washers (186), washers (185), spacers (198) (where used), washers (196), and bolts (197).
4. Bumper from the vehicle.
5. Brace to bumper nuts (192), spring washers (193), washers (194), washers (196), and bolts (197).
6. Braces (54).
7. Bracket to bumper nuts (191), spring washers (190), washers (189), washer (196), and bolts (197).

Install or Connect (Figures 19 and 20)

NOTICE: For steps 4, 5 and 6, see "Notice" on page 2A-1 of this section.

1. Braces to the bumper with bolts (197), washers (196), washers (194), spring washers (193), and nuts (192).
   - Assemble loosely.
2. Bracket to the bumper with bolts (197), washers (196), washers (189), spring washers (190), and nuts (191).
   - Assemble loosely.
3. Bumper to the vehicle.
4. Bumper to frame spacers (198) (where used), spring washers (186), washers (185), bolts (197), washers (196), and nuts (187).

   Tighten
   - Nuts to 47 N•m (35 ft. lbs.)
5. Brackets to the frame rails with bolts (195), washers (204), spring washers (205), and nuts (206).

   Tighten
   - Bracket to frame nuts to 95 N•m (70 ft. lbs.).
   - Bracket to bumper nuts to 47 N•m (35 ft. lbs.).

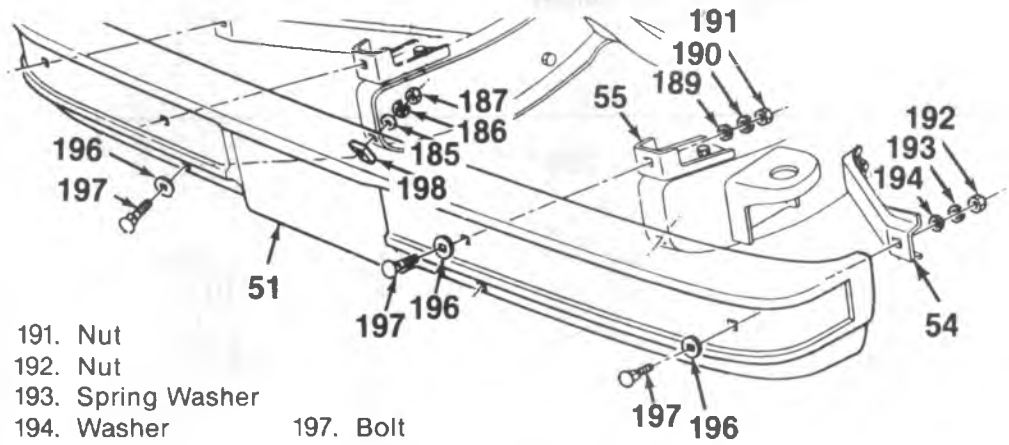

51. Bumper Bar
54. Brace
55. Bracket
185. Washer
186. Spring Washer
187. Nut
189. Washer
190. Spring Washer
191. Nut
192. Nut
193. Spring Washer
194. Washer
196. Washer
197. Bolt
198. Spacer

F2305

Figure 19—P-Model Front Bumper Components

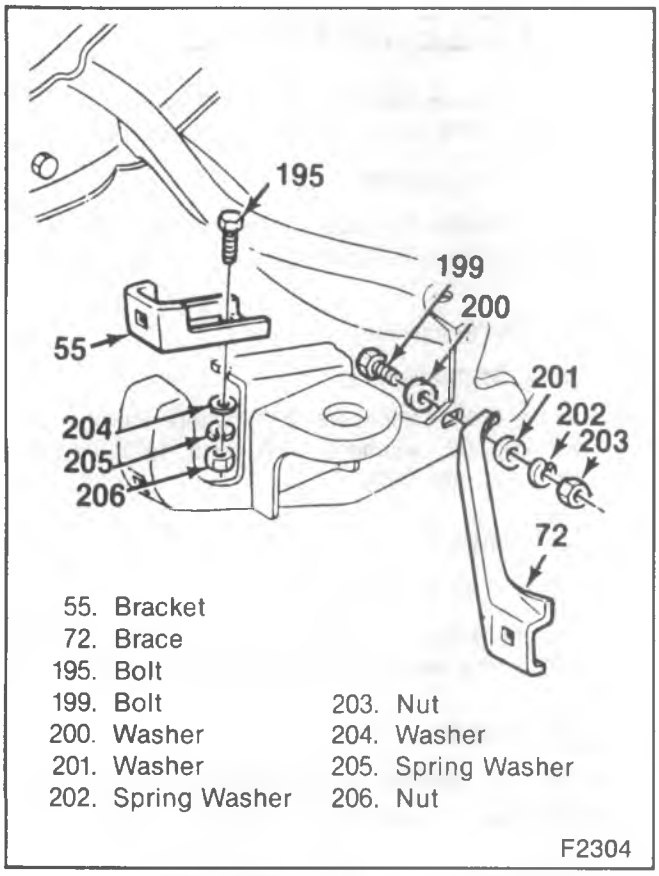

Figure 20—P-Model Front Bumper Braces and Brackets

6. Braces to the frame rails with bolts (199), washers (200 and 201), spring washers (202), and nuts (203).

Tighten

- Brace to frame nuts to 85 N•m (63 ft. lbs.).
- Brace to bumper nuts to 47 N•m (35 ft. lbs.).

FRONT BUMPER REPLACEMENT (WITH RPO FS3 FRONT AXLE)

Remove or Disconnect (Figures 21 and 22)

1. Bracket to frame nuts (207) and washers (208).
2. Brace to frame nuts (222), washers (220 and 221), and bolts (219).
3. Front bumper from the vehicle.
4. Bracket to bumper nuts (218 and 223), spring washers (217 and 224), washers (216 and 225), spacers (198), washers (214), and bolts (215).
5. Brackets (55).
6. Brace to bumper nuts (209), spring washers (210), washers (211 and 212), and bolts (213).
7. Braces (54).

Install or Connect (Figures 21 and 22)

NOTICE: For steps 1, 2, 5 and 6, see "Notice" on page 2A-1 of this section.

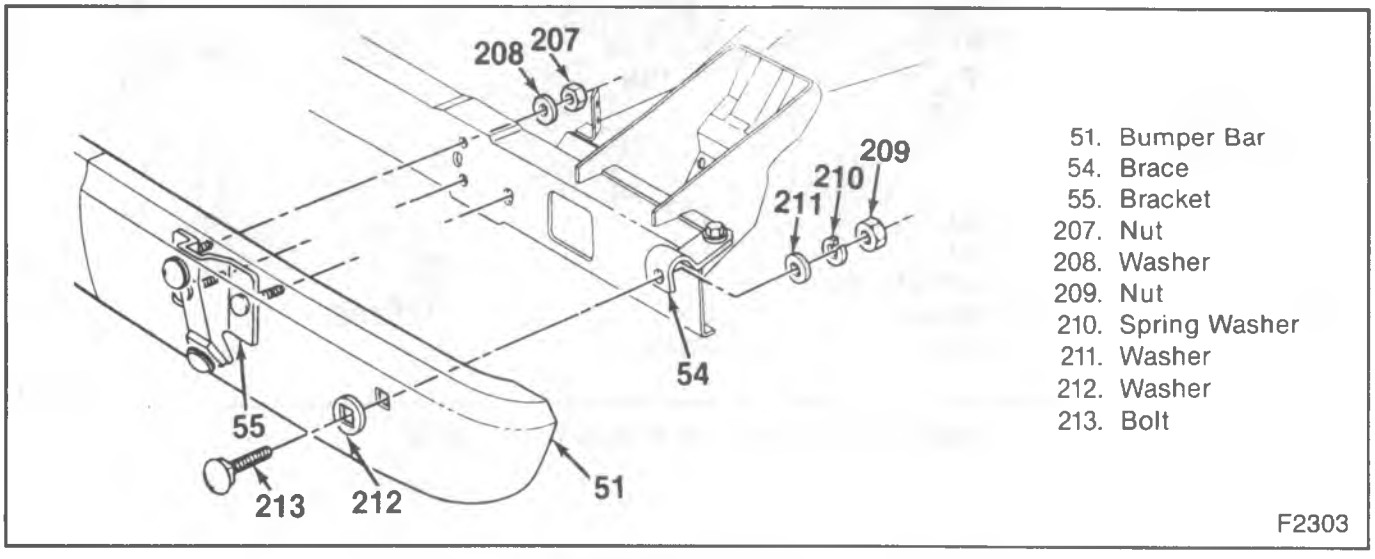

Figure 21—P-Model Front Bumper Components (RPO FS3 Front Axle)

1. Braces to the bumper with bolts (213), washers (211 and 212), spring washers (210), and nuts (209).

   Tighten

   - Nuts to 47 N•m (35 ft. lbs.).
2. Brackets to the bumper with bolts (215), spacers (198), spring washers (217 and 224), washers (216 and 225), and nuts (218 and 223).

   Tighten

   - Nuts to 47 N•m (35 ft. lbs.).
3. Front bumper to the vehicle.
4. Bracket assembly studs into the frame crossmember.
5. Brace to frame bolts (219), washers (220 and 221), and nuts (222).

   Tighten

   - Nuts to 40 N•m (30 ft. lbs.).
6. Bracket to frame washers (208) and nuts (207).

   Tighten

   - Nuts to 64 N•m (47 ft. lbs.).

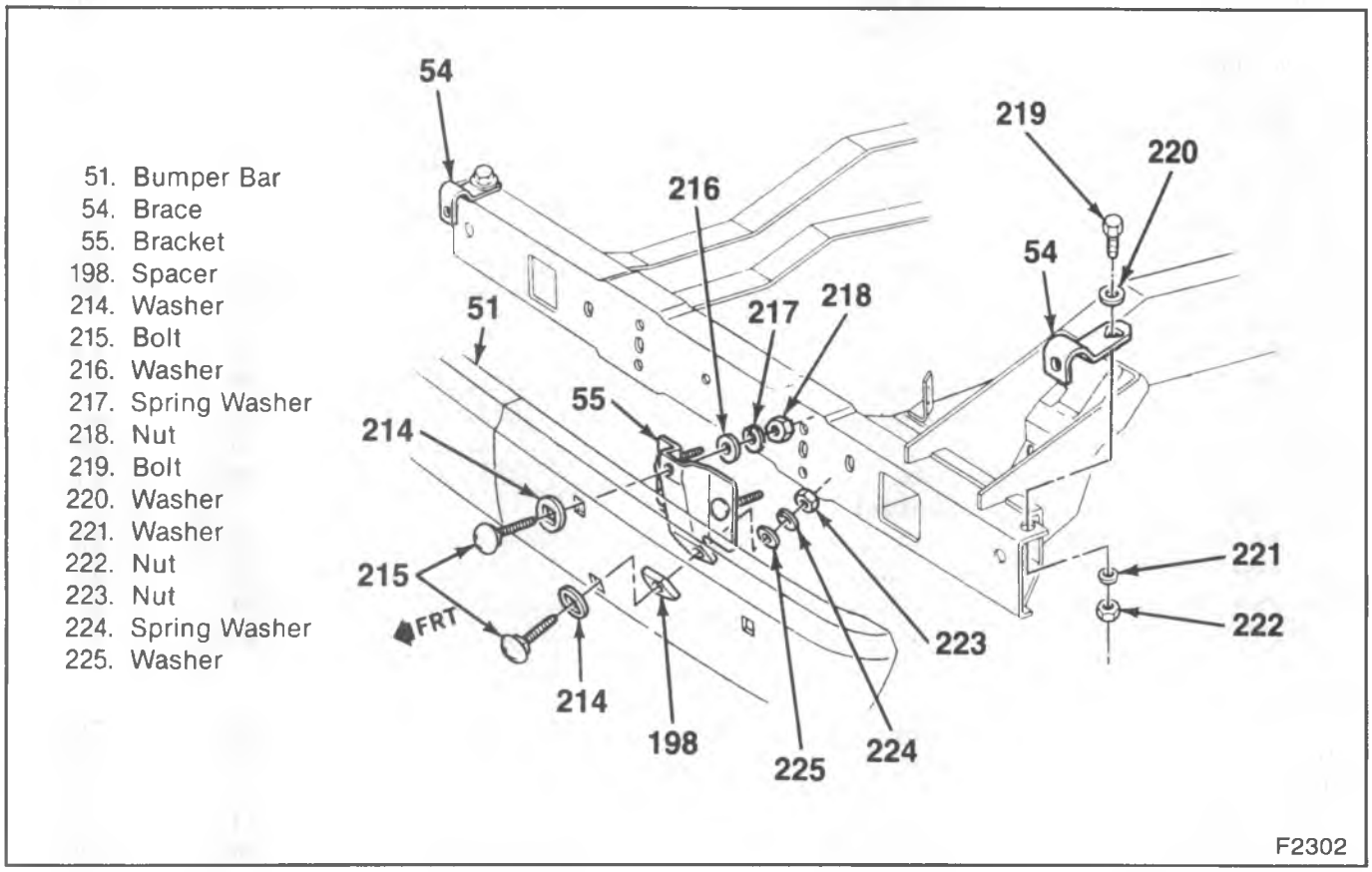

Figure 22—P-Model Front Bumper Braces and Brackets (RPO FS3 Front Axle)

SPECIFICATIONS

BUMPER TORQUE VALUES

Fastener — R/V Models	N·m	Ft. Lbs.
Front Bumper		
Bracket to Frame Rail Nuts	95	70
Brace to Frame Rail Bolts	50	37
Bracket to Bumper Nuts	90	66
Brace to Bumper Nuts	90	66
Rear Bumper (Utility Behicle and Suburban)		
Bracket to Frame Rail Nuts	95	70
Brace to Frame Rail Bolts	95	70
Filler Panel to Support Bolts (Utility Vehicle)	10	89*
Filler Panel to Support Bolts (Suburban)	2.8	25*
Filler Panel Bracket Nuts	41	30
Brace to Bumper Nuts	41	30
Rear Bumper (Bonus Cab, Crew Cab)		
Bracket to Frame Rail Nuts	95	70
Brace to Frame Rail Bolts	95	70
Gravel Deflector Nuts	10	89*
Bumper to Bracket Nuts	90	66
Brace to Bumper Nuts	90	66
Rear Step Bumper		
Bracket Reinforcement Nuts	70	52
Bracket to Brace Nuts	70	52
Bumper to Brace Nuts	70	52
Bumper to Bracket Nuts	70	52
License Plate Bracket to Bumper Nuts	29	21
Trailer Hitch (Utility Vehicle and Suburban)		
Bracket to Frame Nuts	70	52
Bar Assembly to Bracket Bolt	95	70
Bar Assembly to Support Nut	70	52
Support to Bumper Nuts	33	24
Weight Distribution Hitch		
Suburban		
Hitch to Vehicle Rear Bolts	95	70
Hitch to Vehicle Front Bolts	70	52
Utility Vehicle		
Hitch to Vehicle Rear Bolts	73	54
Hitch to Vehicle Front Bolts	70	52
Fastener — P-Models		
Front Bumper		
Bumper to Frame Nuts	47	35
Bracket to Frame Rail Nuts	95	70
Bracket to Bumper Nuts	47	35
Brace to Frame Nuts	85	63
Brace to Bumper Nuts	47	35
Front Bumper (P Model Cab/Chassis)		
Bracket to Frame Nuts	29	21
Brace to Frame Nuts	29	21
Front Bumper (FS3 Front Axle)		
Brace to Bumper Nuts	47	35
Bracket to Bumper Nuts	47	35
Brace to Frame Nuts	40	30
Bracket to Frame Nuts	64	47

*Inch Lbs.

TB-3122-2A

SECTION 2B

SHEET METAL AND FIBERGLASS

NOTICE: When fasteners are removed, always reinstall them at the same location from which they were removed. If a fastener needs to be replaced, use the correct part number fastener for that application. If the correct part number fastener is not available, a fastener of equal size and strength (or stronger) may be used. Fasteners that are not reused, and those requiring thread locking compound will be called out. The correct torque value must be used when installing fasteners that require it. If the above conditions are not followed, parts or system damage could result.

CONTENTS

SUBJECT	PAGE
R/V Models On-Vehicle Service	2B- 1
Hood Replacement	2B- 1
Spring Assembly Replacement	2B- 2
Hood Hinge Replacement	2B- 2
Primary Hood Latch Replacement	2B- 2
Secondary Hood Latch and Spring Replacement	2B- 3
Hood Release Cable Replacement	2B- 4
Hood Ornament Replacement	2B- 4
Cowl Vent Grille Replacement	2B- 5
Grille Replacement	2B- 5
Front Fender Replacement	2B- 6
Wheelhouse Panel Replacement	2B- 7
Rear Fender Replacement	2B- 8
Radiator Support Replacement	2B- 8
Sheet Metal Unit Replacement	2B-10
Sheet Metal Adjustments	2B-11
Noise Shields	2B-11
Body Moldings and Emblems	2B-11
Cab Mount Replacement	2B-21
Anti-Corrosion Treatment	2B-21
Sheet Metal Repair	2B-21
Anti-Chip Coating Replacement	2B-22
Fiberglass Top Replacement	2B-24
Paint	2B-25
Paint Codes	2B-25
Exterior Colors	2B-26
Interior Colors	2B-26
Specifications	2B-27
Special Tools	2B-27

R/V MODELS ON-VEHICLE SERVICE

HOOD REPLACEMENT

Remove or Disconnect (Figure 1)

- Raise and support the hood at front and rear.
- Place protective coverings over the cowl and the fenders.
- Mark the position of the hinge on the hood.

1. Spring assembly to hood bolts (4).
2. Hood hinge to hood bolts (5).
3. Hood from the vehicle.

Install or Connect (Figure 1)

NOTICE: For steps 2 and 3 see "Notice" on page 2B-1 of this section.

1. Hood to the vehicle.
   - Align the hood with the previously made marks.
2. Hood hinge to hood bolts (5).

Tighten

- Bolts to 25 N•m (18 ft. lbs.).

3. Spring assembly to hood bolts (4).

Tighten

- Bolts to 25 N•m (18 ft. lbs.).

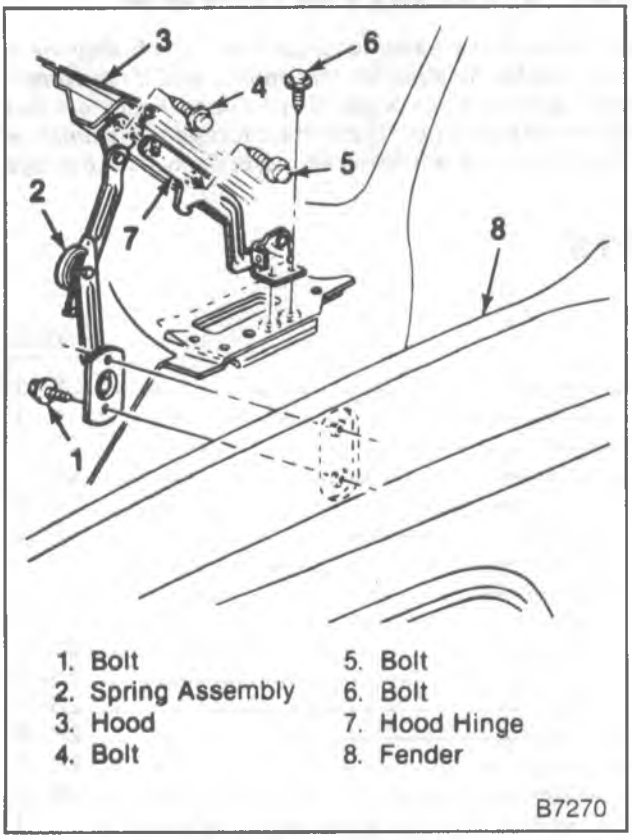

Figure 1—Hood Hinge Components

SPRING ASSEMBLY REPLACEMENT

Remove or Disconnect (Figure 1)

- Raise and support the front of the hood.

1. Spring assembly to hood bolts (4).
2. Spring assembly to fender bolts (1).
3. Spring assembly from the vehicle.

Install or Connect (Figure 1)

1. Spring assembly to the vehicle.

NOTICE: See "Notice" on page 2B-1 of this section.

2. Spring assembly to fender bolts (1).

Tighten

- Bolts to 25 N•m (18 ft. lbs.).

HOOD HINGE REPLACEMENT

Remove or Disconnect (Figure 1)

- Raise and support the hood at front and rear.

1. Cowl vent grille. Refer to "Cowl Vent Grille Replacement."
2. Hinge to hood bolts (5).
3. Hinge to cowl bolts (6).
4. Hinge from the vehicle.

Install or Connect (Figure 1)

NOTICE: For steps 2 and 3, see "Notice" on page 2B-1 of this section.

1. Hinge to the vehicle.
2. Hinge to cowl bolts (6).

Tighten

- Bolts to 43 N•m (32 ft. lbs.).

3. Hinge to hood bolts (5).

Tighten

- Bolts to 25 N•m (18 ft. lbs.).

4. Cowl vent grille. Refer to "Cowl Vent Grille Replacement."

PRIMARY HOOD LATCH REPLACEMENT

Remove or Disconnect (Figure 2)

- Raise the hood.

1. Hood latch release cable from the latch. Refer to "Hood Release Cable Replacement."
2. Bracket to hood latch bolts (9).
3. Hood latch from the vehicle.
4. Bracket to radiator support bolts (10).
5. Bracket from the vehicle.

Adjust

- Front hood bumpers, so that the top of the hood is flush with the fenders.

Install or Connect (Figure 2)

1. Bracket to the radiator support.
2. Bracket to support bolts (10) loosely.
3. Primary hood latch to the bracket.
4. Latch to bracket bolts (9) loosely.
5. Hood latch release cable to the latch.

Adjust

NOTICE: For steps 1 and 2, refer to "Notice" on page 2B-1.

1. Hood latch bracket left and right until the striker in the hood easily engages the primary latch.

- Raise the hood.

Tighten

- Bracket to radiator support bolts to 27 N•m (20 ft. lbs.).

2. Hood latch height so that when the hood is closed, the hood is held securely against the front hood bumpers. Mark this height.

- Raise the hood.

Tighten

- Bracket to hood latch bolts to 27 N•m (20 ft. lbs.).

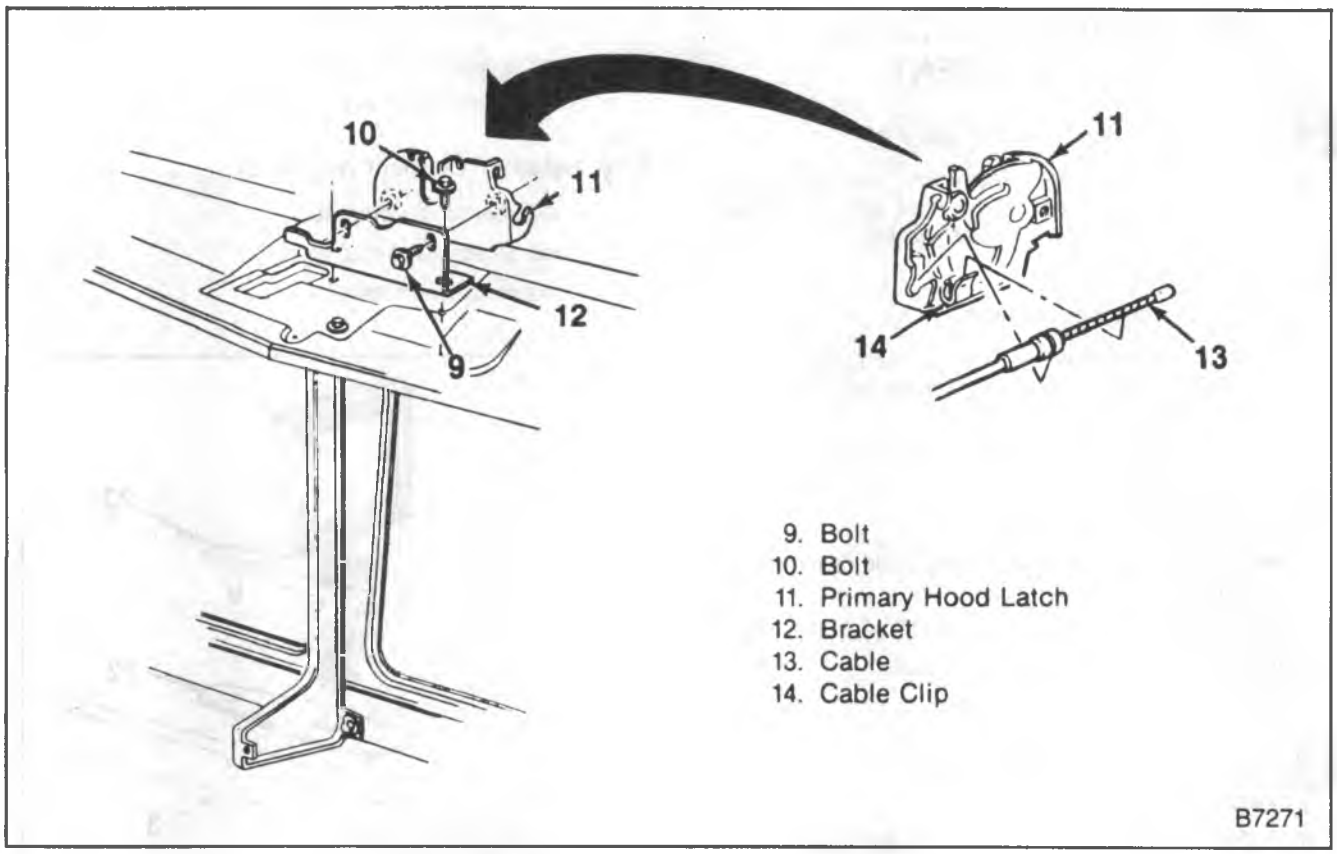

Figure 2—Hood Primary Latch Components

SECONDARY HOOD LATCH AND SPRING REPLACEMENT

Remove or Disconnect (Figure 3)

- Mark the position of the secondary hood latch on the hood.

1. Secondary hood latch to hood bolts (18).
2. Secondary hood latch from the vehicle.
3. Spring from the hood.
   - Twist the spring from the reinforcement.

Install or Connect (Figure 3)

1. Spring to the hood.
   - Twist the spring into the reinforcement.

Install or Connect (Figure 3)

1. Spring to the hood.
   - Twist the spring into the reinforcement.
2. Secondary hood latch to the vehicle.

NOTICE: See "Notice" on page 2B-1 of this section.

3. Secondary hood latch to hood bolts (18).

Tighten

- Bolts to 27 N•m (20 ft. lbs.).

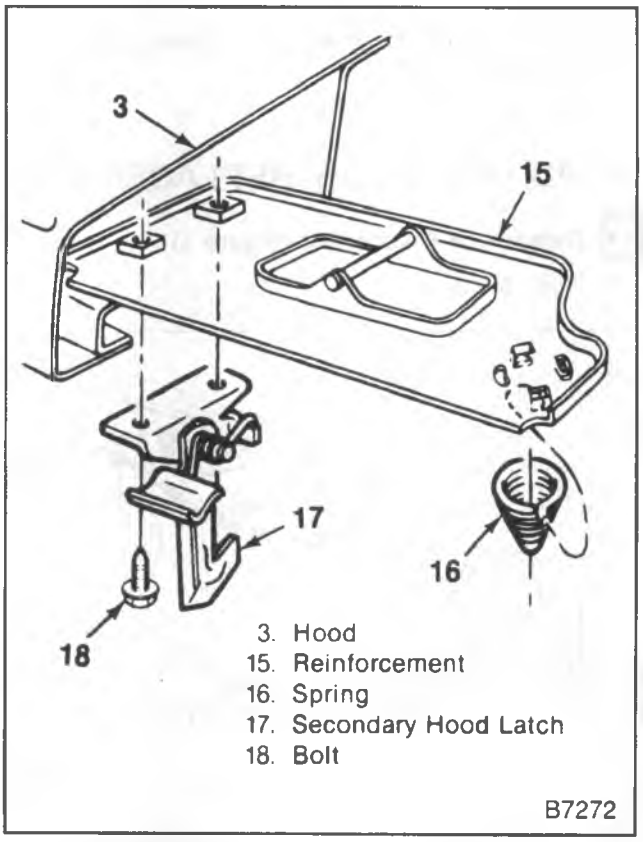

Figure 3—Hood Secondary Latch Components

HOOD RELEASE CABLE REPLACEMENT

Remove or Disconnect (Figure 4)

- If the cable is broken, release the hood by pressing the primary latch tab on the right side of the lock assembly. Use a rod to press the tab.
- Raise the hood.

1. Cable from the primary latch.
   - Insert a screwdriver into the clip, and lift the cable from the lock. Then, carefully pry the cable grommet from the lock flange.
2. Cable from the radiator support, and the wheelhouse retaining strap.
3. Grommet from the cowl.
   - Cut the grommet down to the cable casing on the engine side of the cowl.
   - Push the cable and grommet through the cowl.
4. Cable handle to air vent bezel bolts.
5. Cable from the vehicle.

Install or Connect (Figure 4)

1. New cable to the vehicle.
2. Cable through the driver's side of the cowl.
   - Push the grommet into the driver's side of the cowl.
3. Cable bolts through the cable handle, and into the air vent bezel.
4. Cable through the wheelhouse retaining strap, and the radiator support.
5. Cable to the primary latch.

HOOD ORNAMENT REPLACEMENT

Remove or Disconnect (Figure 5)

- Raise the hood.

1. Hood ornament nuts (21).
2. Hood ornament from the hood.
3. Gasket from the hood.

Install or Connect (Figure 5)

1. Hood seal to the ornament.
2. Hood ornament to the hood.
3. Hood ornament nuts (21).

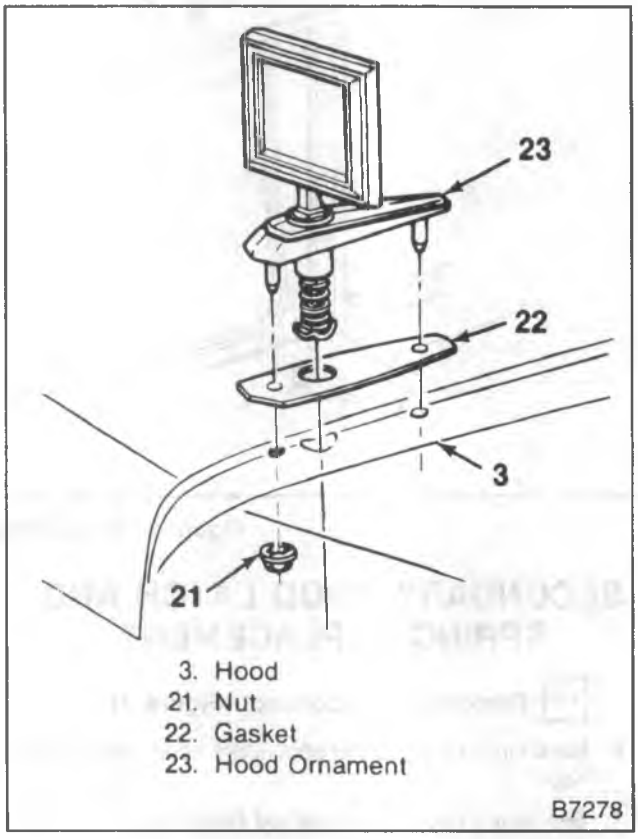

Figure 5 – Hood Ornament Components

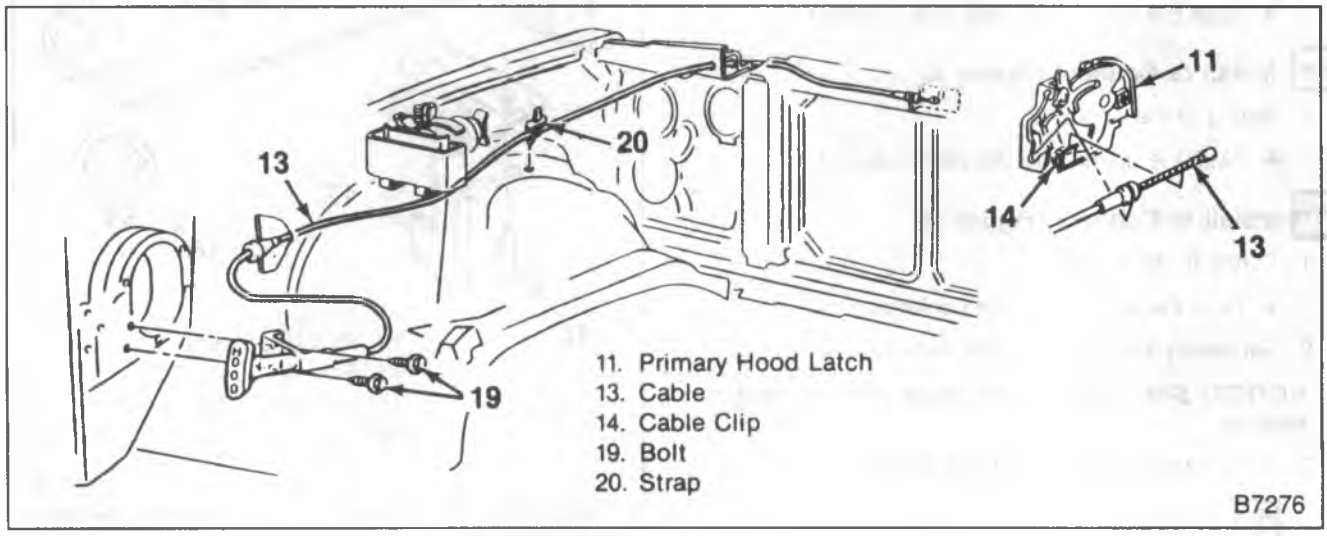

Figure 4 – Hood Release Cable

COWL VENT GRILLE REPLACEMENT

Remove or Disconnect (Figure 6)

1. Hood hinge to body bolts and tilt the hood forward. Refer to "Hood Replacement."
2. Wiper arms.
3. Cowl vent grille panel screws (28).
4. Cowl vent grille plastic fasteners from the windshield frame by pulling the grille forward.
5. Cowl vent grille from the vehicle.

Install or Connect (Figure 6)

1. Cowl vent grille to the vehicle.
2. Cowl vent grille plastic fasteners to the windshield frame by pushing the grille against the body.
3. Cowl vent grille panel screws (28).
4. Wiper arms.
5. Hood hinge to body bolts.

GRILLE REPLACEMENT

Remove or Disconnect (Figure 7)

1. Headlamp bezel screws and bezel.
2. Screws (30) holding the grille to the radiator support.
3. Screws (33) holding the grille to the lower panel.
4. Grille.

Install or Connect (Figure 7)

1. Grille.
2. Grille to the radiator support with screws (30).
3. Screws to lower panel.
4. Headlamp bezels.

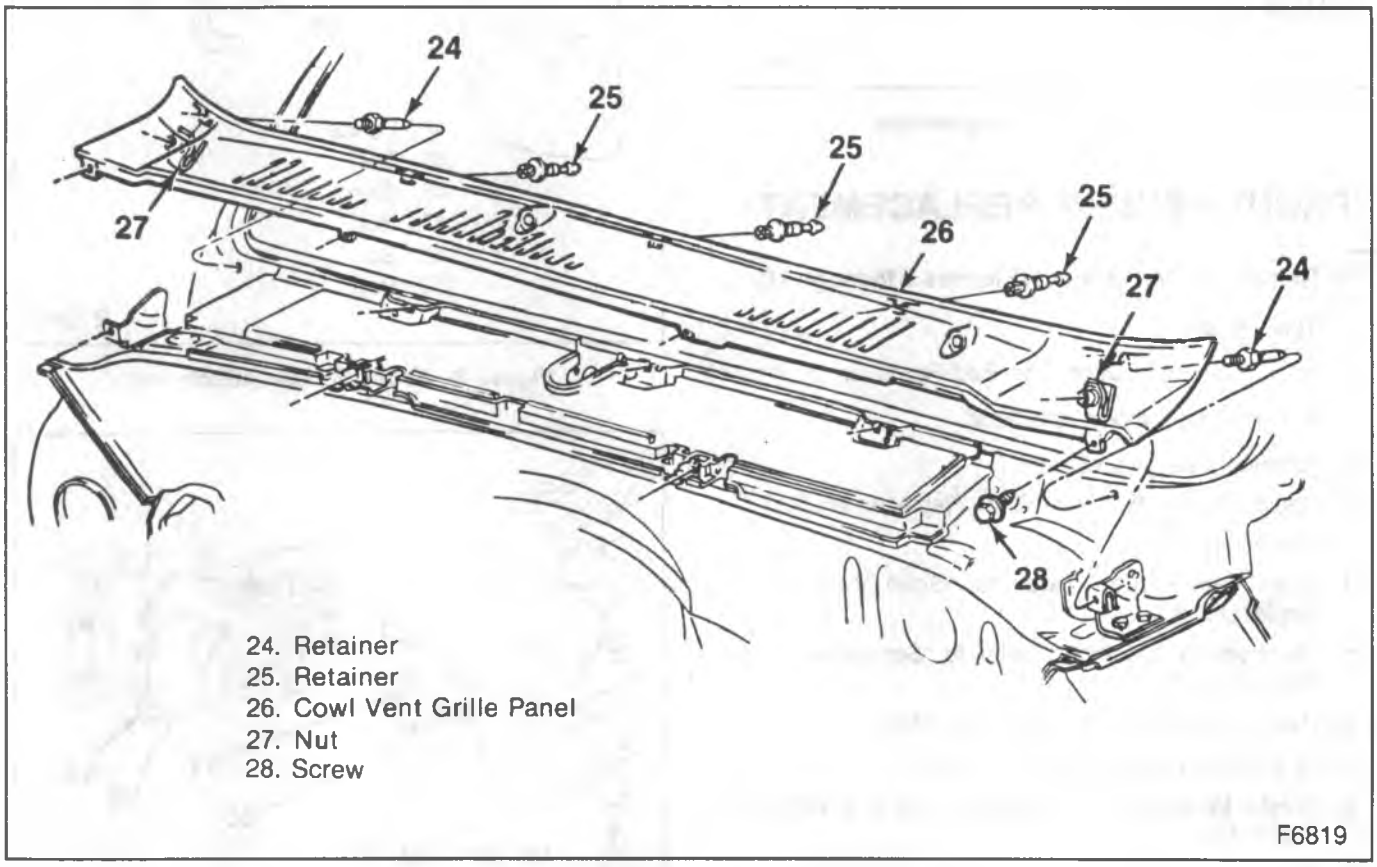

Figure 6—Cowl Vent Grille Components

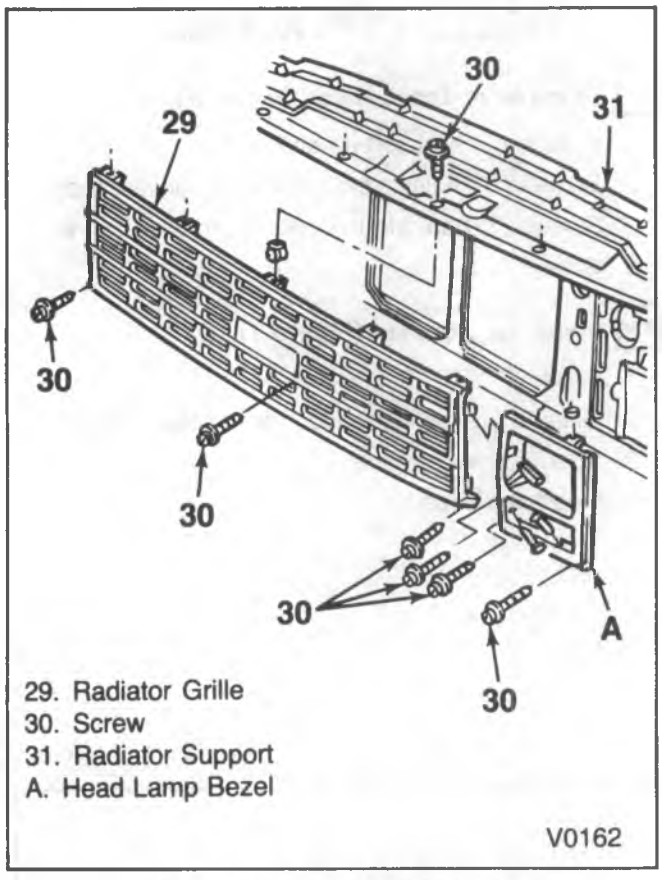

Figure 7—Grille Components

FRONT FENDER REPLACEMENT

Remove or Disconnect (Figures 7 through 10)

Tool Required:

J 24595-B Door Trim Pad Remover

- Raise the support and hood.

1. Headlamp bezel and trim.
2. Radiator grille. Refer to "Grille Replacement."
3. Headlamp.
4. Cowl vent grille. Refer to "Cowl Vent Grille Replacement."
5. Hood spring assembly. Refer to "Spring Assembly Replacement."
6. Radiator support to fender bolts (119).
7. Wheelhouse panel to shield bolts.
8. Shield to underbody retainers using J 24595-B (figure 10).
9. Shield from the vehicle.
10. Wheelhouse panel to fender bolts (50).
11. Lower door pillar to fender bolt (45) and shim(s) (46).
12. Fender to cowl bolt (47) and shim(s) (46).
    - Open the front door.
13. Upper fender to door pillar bolt (48) and shim(s) (46).
14. Fender from the vehicle.
15. Insulator from the fender.

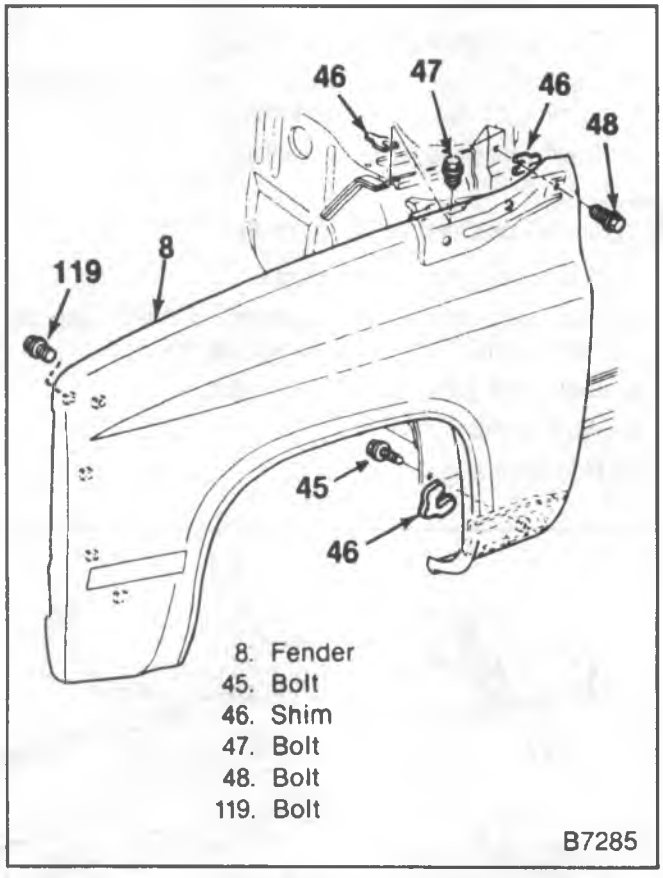

Figure 8—Front Fender Attachment

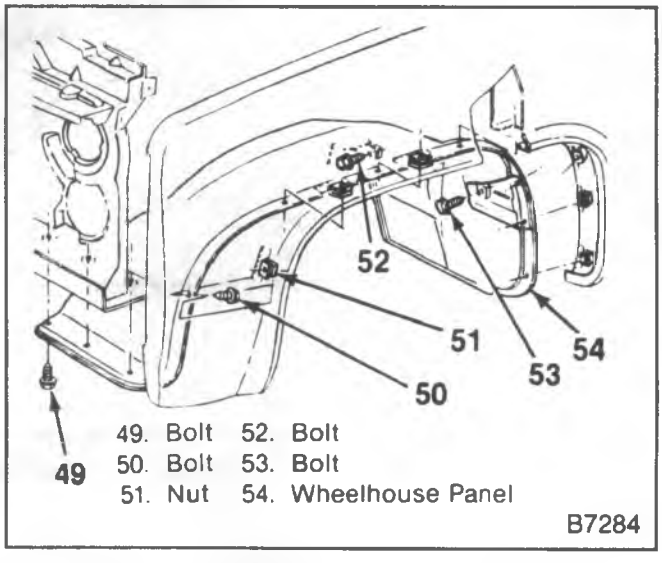

Figure 9—Wheelhouse Panel Attachment

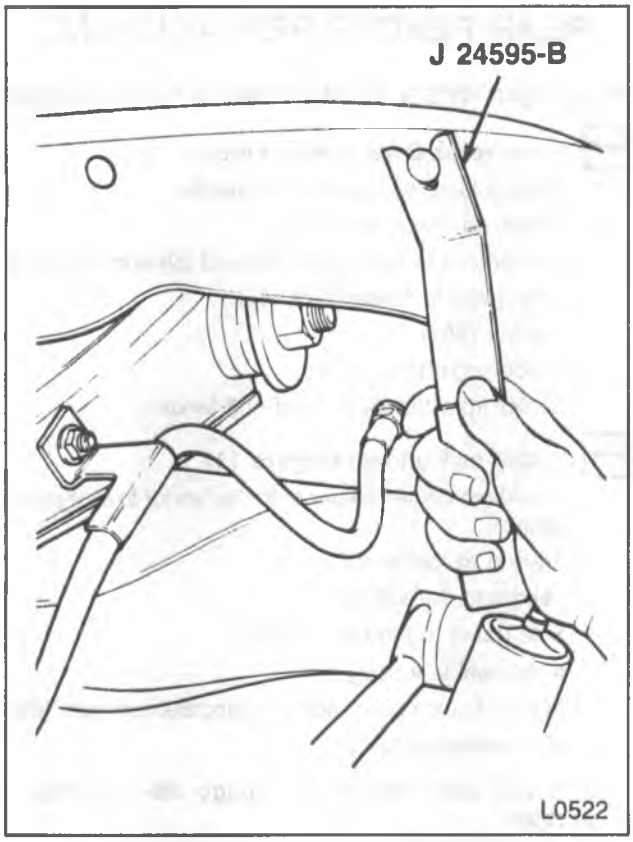

Figure 10—Removing Shield Retainers

Install or Connect (Figures 8 and 9)

NOTICE: For steps 6, 7 and 10, see "Notice" on page 2B-1 of this section.

1. Insulator to the fender.
2. Fender to the vehicle.
3. Upper fender to the door pillar bolt (48) and shim(s) (46) as required.
   - Assemble loosely.
4. Fender to cowl bolt (47) and shim(s) (46) as required.
   - Assembly loosely.
5. Lower door pillar to fender bolt (45) and shim(s) (46) as required.
   - Assemble loosely.
6. Radiator support to fender bolts (119).

   Tighten
   - Bolts to 17 N•m (13 ft. lbs.).
7. Wheelhouse to fender bolts (50).

   Tighten
   - Wheelhouse to fender bolts (50) to 17 N•m (13 ft. lbs.).
   - Lower door pillar to fender bolt to 43 N•m (31 ft. lbs.).
8. Shield to the vehicle.
9. Shield to underbody retainers.
10. Wheelhouse panel to shield bolts.

    Tighten
    - Fender to cowl bolt (47) to 43 N•m (31 ft. lbs.).
    - Upper fender to door pillar bolt to 43 N•m (31 ft. lbs.).
11. Hood spring assembly. Refer to "Spring Assembly Replacement."
12. Cowl vent grille. Refer to "Cowl Vent Grille Replacement."
13. Radiator grille.
14. Headlamp.
15. Headlamp bezel.

WHEELHOUSE PANEL REPLACEMENT

RIGHT PANEL REPLACEMENT

Remove or Disconnect (Figure 9)

1. Jack handle.
2. Lug wrench.
3. Coolant recovery reservoir.
4. Air conditioning line retainers (if equipped).
   - Raise and support the vehicle.
5. Right front wheel.
6. Wheelhouse panel to radiator support bolts (49).
7. Wheelhouse panel to underbody shield bolts.
8. Wheelhouse panel reinforcement to underbody bolts (52) and (53).
9. Wheelhouse panel to fender bolts (50).
10. Wheelhouse panel from the vehicle.
    - Slide the panel forward to clear the lower back side of the fender well.
    - Tilt the wheelhouse panel out of the vehicle.

Install or Connect (Figure 9)

NOTICE: For steps 2, 3 and 5, see "Notice" on page 2B-1 of this section.

1. Wheelhouse panel to the vehicle.
   - Tilt the wheelhouse panel into the vehicle.
   - Slide the panel into position.
2. Wheelhouse panel to fender bolts (50).

   Tighten
   - Bolts to 17 N•m (13 ft. lbs.).
3. Wheelhouse panel reinforcement to underbody bolts (52) and (53).

   Tighten
   - Bolts (52) to 17 N•m (13 ft. lbs.).
   - Bolt (53) to 47 N•m (35 ft. lbs.).
4. Wheelhouse panel to underbody shield bolts.
5. Wheelhouse panel to radiator support bolts (49).

   Tighten
   - Bolts to 17 N•m (13 ft. lbs.).

6. Right front wheel.
   - Lower the vehicle.
7. Air conditioning line retainers (if equipped).
8. Coolant recovery reservoir.
9. Lug wrench.
10. Jack handle.

LEFT PANEL REPLACEMENT

Remove or Disconnect (Figure 9)

1. Jack.
2. Windshield washer fluid reservoir.
3. Wiring harness.
4. Hood release cable.
   - Raise and support the vehicle.
5. Left front wheel.
6. Wheelhouse panel to radiator support bolts (49).
7. Wheelhouse panel to underbody shield bolts.
8. Wheelhouse panel reinforcement to underbody bolts (52) and (53).
9. Wheelhouse panel to fender bolts (50).
10. Wheelhouse panel from the vehicle.
    - Slide the panel forward to clear the lower back side of the fender well.
    - Tilt the wheelhouse panel out of the vehicle.

Install or Connect (Figure 9)

NOTICE: For steps 2, 3 and 5, see "Notice" on page 2B-1 of this section.

1. Wheelhouse panel to the vehicle.
   - Tilt the wheelhouse panel into the vehicle.
   - Slide the panel into position.
2. Wheelhouse panel to fender bolts (50).

   Tighten
   - Bolts to 17 N•m (13 ft. lbs.).
3. Wheelhouse panel reinforcement to underbody bolts (52) and (53).

   Tighten
   - Bolt (52) to 17 N•m (13 ft. lbs.).
   - Bolt (53) to 47 N•m (35 ft. lbs.).
4. Wheelhouse panel to underbody shield bolts.
5. Wheelhouse panel to radiator support bolts (49).

   Tighten
   - Bolts to 17 N•m (13 ft. lbs.).
6. Right front wheel.
   - Lower the vehicle.
7. Hood release cable.
8. Wiring harness.
9. Windshield washer fluid reservoir.
10. Jack.

REAR FENDER REPLACEMENT

DUAL REAR WHEEL MODEL FENDER REPLACEMENT

Remove or Disconnect (Figure 11)

1. Parking lamp wiring from the fender.
2. Fender to brace bolts (71).
3. Fender to side panel bolts (72 and 69) and nuts (68).
4. Side panel to fender nuts (66).
5. Bracket (281).
6. Fender from the vehicle.
7. Sealer from the side panel and fender.

Install or Connect (Figure 11)

1. A medium bodied sealer onto the fender to side panel flange.
2. Bracket to the fender.
3. Fender to the vehicle.
4. Side panel to fender nuts (66).
   - Assemble loosely.
5. Fender to side panel bolts (72 and 69) and nuts (68).
   - Assemble loosely.

NOTICE: See "Notice" on page 2B-1 of this section.

6. Fender to brace bolts (71).

   Tighten
   - All of the nuts and bolts to 17 N•m (13 ft. lbs.).
7. Parking lamp wiring to the fender.

- Clean excess sealant from the fender.

RADIATOR SUPPORT REPLACEMENT

Remove or Disconnect

1. Radiator from the vehicle.
   - Refer to RADIATOR (SEC. 6B2).
2. Air conditioning condenser from the vehicle.
   - Refer to AIR CONDITIONING (SEC. 1B).
3. Battery.
   - Refer to BATTERY (SEC. 6D1).
4. Headlamp and parking lamp wires from the lamps.
5. Headlamp and parking lamp wiring harness from the radiator support.
6. Headlamp bezels.
7. Headlamp assemblies.
8. Ground wires from the radiator support.
9. Fuel vapor canister from the radiator support.
10. Air cleaner inlet from the radiator support.
11. Primary hood latch bracket to the radiator support bolts.
12. Grille from the vehicle.
13. Lower radiator grille panel from the vehicle.

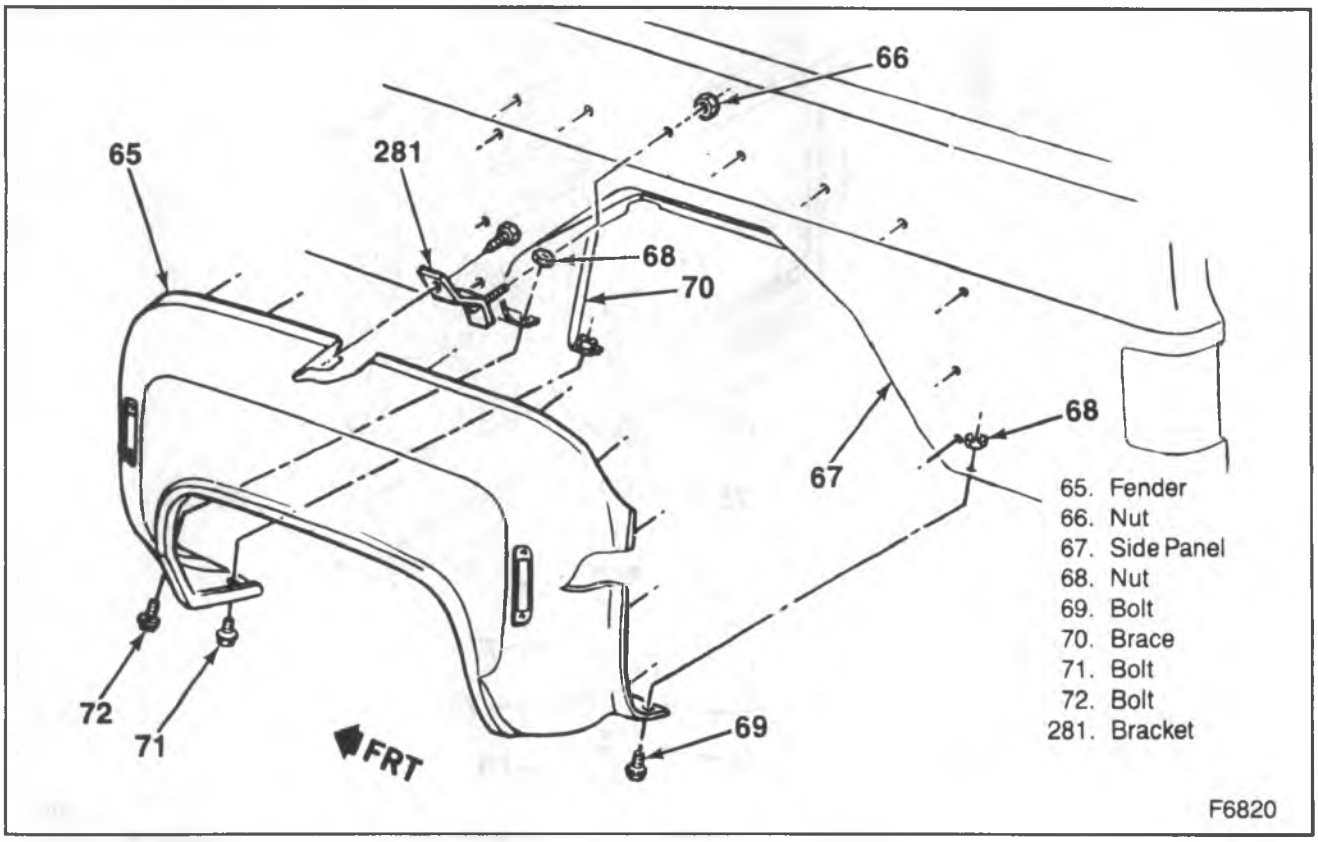

Figure 11—Dual Rear Fender Attachment

14. Sheet metal support to radiator support bolts.
15. Sheet metal support from the vehicle.
16. Radiator support to fender bolts (119) (figure 8).
17. Wheelhouse panel to radiator support bolts (49) (figure 9).
18. Radiator support to frame nuts (80), lower retainers (79), lower cushions (78), upper cushions (76), retainers (75), bolts (73), and washers (74).
19. Radiator support from the vehicle.
    - Tilt the radiator support to the rear, and lift it up and out of the vehicle.

Install or Connect (Figure 12)

NOTICE: For steps 3, 4, 6 and 9, see "Notice" on page 2B-1 of this section.

1. Radiator support to the vehicle.
    - Lower the radiator support into the vehicle, and tilt it into position.
2. Radiator support to frame washers (74), bolts (73), retainers (75), upper cushions (76), lower cushions (78), lower retainers (79), and frame nuts (80).
    - Assemble loosely.
3. Wheelhouse panel to radiator support bolts (49) (figure 9).

    Tighten
    - Bolts to 17 N•m (13 ft. lbs.).
4. Radiator support to fender bolts (119) (figure 8).

    Tighten
    - Bolts to 17 N•m (13 ft. lbs.).
5. Sheet metal support to the vehicle.
6. Sheet metal support to radiator support bolts.

    Tighten
    - Bolts to 17 N•m (13 ft. lbs.).
    - Radiator support to frame nuts (80) to 47 N•m (35 ft. lbs.).
7. Lower radiator grille panel to the vehicle.
8. Grille to the vehicle.
9. Primary hood latch bracket to the radiator support bolts.

    Adjust
    - Hood latch left or right so that the hood properly engages the hood latch.

    Tighten
    - Bracket to radiator support bolts to 27 N•m (20 ft. lbs.).
10. Air cleaner inlet to the radiator support.
11. Fuel vapor canister to the radiator support.
12. Ground wires to the radiator support.
13. Headlamp assemblies.
14. Headlamp bezels.
15. Headlamp and parking lamp wiring harness to the radiator support.

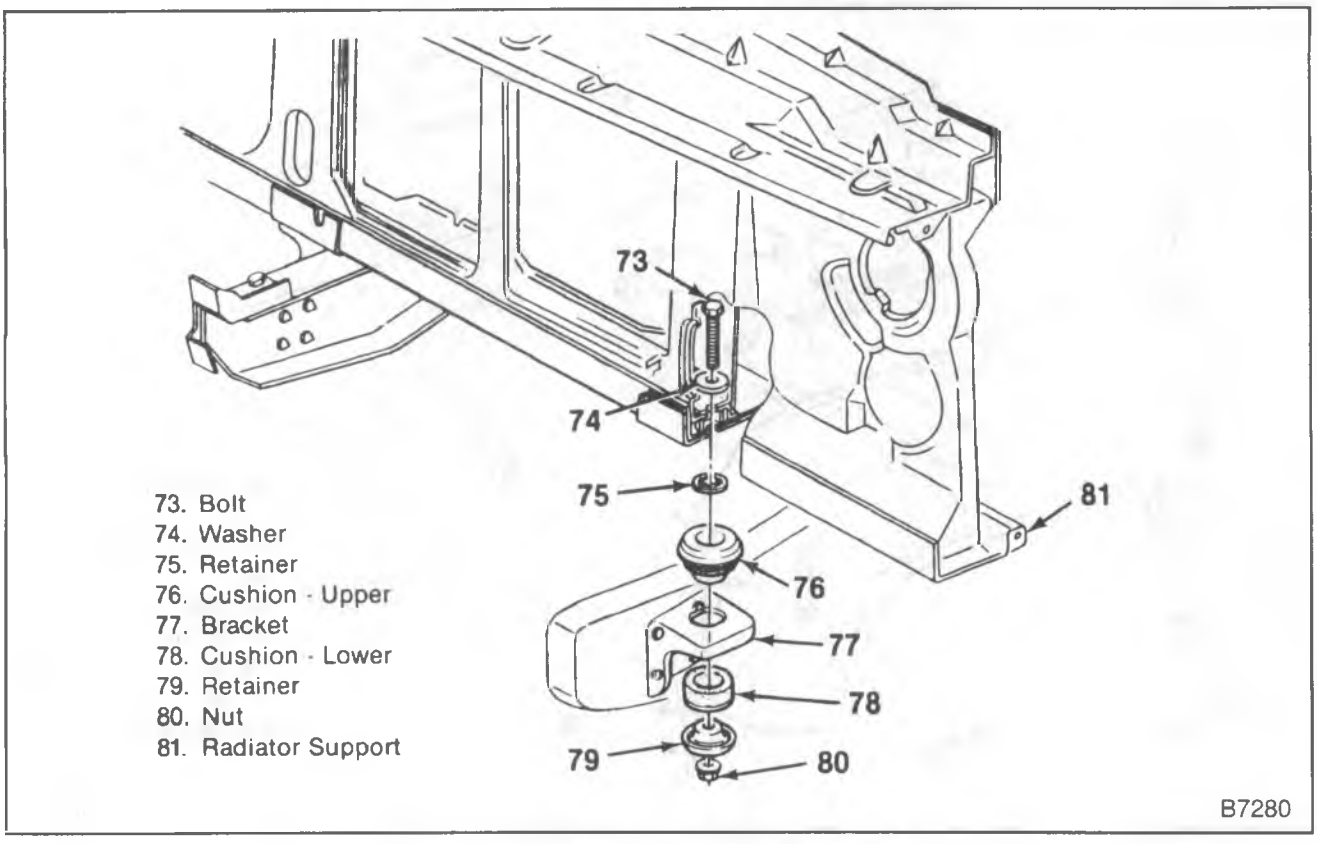

Figure 12—Radiator Support Mounting

16. Headlamp and parking lamp wires to the lamps.
17. Battery.
    - Refer to BATTERY (SEC. 6D1).
18. Air conditioning condenser.
    - Refer to AIR CONDITIONING (SEC. 1B).
19. Radiator.
    - Refer to RADIATOR (SEC. 6B2).

SHEET METAL UNIT REPLACEMENT

Remove or Disconnect

Tool Required:

J 24595-B Door Trim Pad Remover

1. Hood.
    - Refer to "Hood Replacement" earlier in this section.
2. Battery.
    - Refer to BATTERY (SEC. 6D1).
3. Radiator.
    - Refer to RADIATOR (SEC. 6B2).
4. Air conditioning condenser.
    - Refer to AIR CONDITIONING (SEC. 1B).
5. Headlamp and parking lamp wires from the lamps.
6. Headlamp and parking lamp wiring harness from the radiator support.
7. Ground wires from the radiator support.
8. Fuel vapor canister from the radiator support.
9. Air cleaner inlet from the radiator support.
10. Bumper from the vehicle.
    - Refer to FRAME AND BUMPERS (SEC. 2A).
11. Wheelhouse panel to fender bolts (50) (figure 9).
12. Fender to cowl bolts (47) (figure 8).
13. Upper fender to door pillar bolt (48).
14. Wheelhouse panel to shield bolts.
15. Shield to underbody retainers using J 24595-B (figure 10).
16. Shield from the vehicle.
17. Lower fender to door pillar bolt (45).
18. Radiator support to frame nuts (80), lower retainers (79), lower cushions (78), upper cushions (76), retainers (75), bolts (73), and washers (74) (figure 12).
19. Sheet metal assembly.
    - With the aid of a helper, lift the sheet metal from the chassis.

Install or Connect

NOTICE: For steps 3, 7, 8 and 9, see "Notice" on page 2B-1 of this section.

1. Sheet metal assembly.
    - With the aid of a helper, lift the sheet metal onto the chassis.

2. Radiator support to frame washers (74), bolts (73), retainers (75), upper cushions (76), lower cushions (78), lower retainers (79), and nuts (80) (figure 12).
3. Lower fender to door pillar bolts (45) (figure 8).

Tighten

- Bolt to 43 N•m (31 ft. lbs.)

4. Shield to the vehicle.
5. Shield to underbody retainers.
6. Wheelhouse panel to shield bolts.
7. Upper fender to door pillar bolt (48) (figure 8).

Tighten

- Bolt to 43 N•m (31 ft. lbs.).

8. Fender to cowl bolts (47).

Tighten

- Bolts to 43 N•m (31 ft. lbs.).

9. Wheelhouse panel to fender bolts (50) (figure 9).

Tighten

- Wheelhouse panel to fender bolts to 17 N•m (13 ft. lbs.).

10. Bumper.
    - Refer to FRAME AND BUMPERS (SEC. 2A).
11. Air cleaner inlet to the radiator support.
12. Fuel vapor canister to the radiator support.
13. Ground wires to the radiator support.
14. Headlamp and parking lamp wiring harness to the radiator support.
15. Headlamp and parking lamp wires to the lamps.
16. Air conditioning condenser.
    - Refer to AIR CONDITIONING (SEC. 1B).
17. Radiator to the vehicle. Refer to RADIATOR (SEC. 6B2).
18. Battery to the vehicle.
19. Hood to the vehicle.

SHEET METAL ADJUSTMENTS

In order to have the proper operation and appearance of sheet metal components, it is important that certain fits and gaps between components be maintained. The gaps given in this procedure are suggested as the best alignment for these components (figure 13).

In aligning sheet metal, it is best to start with the rear-most component, and work forward.

1. Starting with the fenders, align the rear edge of each fender to the rocker panel and the door. The gap between these components should be 5 mm ±2.3 mm (0.19-inch ±0.09-inch). This adjustment should be accomplished by moving the fender forward or rearward. The surface of the fender should be flush with the rocker panel and the door. Add or remove shims to perform this adjustment.
2. Align the fender to the cowl vent grille to obtain a gap of 4.6 mm ±1 mm (0.18-inch ±0.03-inch). The surface of the cowl vent grille should be flush with the fender surface.
3. Align the hood with the cowl vent grille so that there is a gap of 8 mm ±1 mm (0.31-inch ±0.03-inch) between the rear edge of the hood and the front edge of the cowl vent grille. The hood surface should be flush with the cowl vent grille surface within ±1.5 mm (±0.06-inch).
4. Align the left and right edges of the hood so that a gap of 4.6 mm ±1 mm (0.18-inch ±0.03-inch) exists between the hood and the fenders. The hood surface should be flush with the fender surface within +0.0 - 1.5 mm (+0.00 -0.06-inch). If this gap is difficult to obtain and the load appears to be cocked in between the fenders, the radiator support may need to be shifted. By shifting the radiator support, the entire front end sheet metal can be aligned as a unit. Loosen the support to the frame bolts, and shift the radiator support to obtain the proper gaps. Then while holding the support in position, retighten the radiator support to frame bolts.
5. Align the front face of the hood to obtain a gap of 4.6 mm ±1 mm (0.18-inch ±0.03-inch) between the hood and the radiator support upper panel. The hood bumpers on the top of the radiator support should be adjusted to give the proper support to hood gap. The surface of the hood should be flush with the radiator support upper panel (not the grille molding).

NOISE SHIELDS

Noise insulators are used to reduce exterior engine noises on R/V models over 10,000 pounds GVWR equipped with 6.2L diesel engines. There are three types of shields on the engine compartment side of the dash, one on the hood, one on the inside of each front fender and one at the cowl/fender joint on each side (figures 14 and 15).

BODY MOLDINGS AND EMBLEMS

DOOR EDGE GUARD MOLDING

Remove or Disconnect (Figure 16)

- Door edge guard by prying it off.

Install or Connect (Figure 16)

- Door edge guard by gently tapping it into place.

MOLDINGS, NAMEPLATES AND EMBLEMS

Some trim items and nameplates mount to the body with retainers and nuts (figures 17 and 18). Most are adhesive retained (figures 19 through 23). When replacing adhesive retained moldings, be sure they are applied in an environment free of dust or dirt that could come in contact with the sticky backing and prevent proper adhesion.

The original equipment grille emblems are adhesive retained. The replacement emblems mount to the grille with nuts at the back. The replacement lettered emblem consists of three separate letters (figure 24).

ADHESIVE-RETAINED ITEMS

1. Clean the area where the replacement item is to be mounted. Use a suitable solvent such as flash naptha or a mixture of 50 percent isopropyl alcohol and 50 percent water. Dry thoroughly. If the paint in the area is chipped, repaint the area, feathering it in.

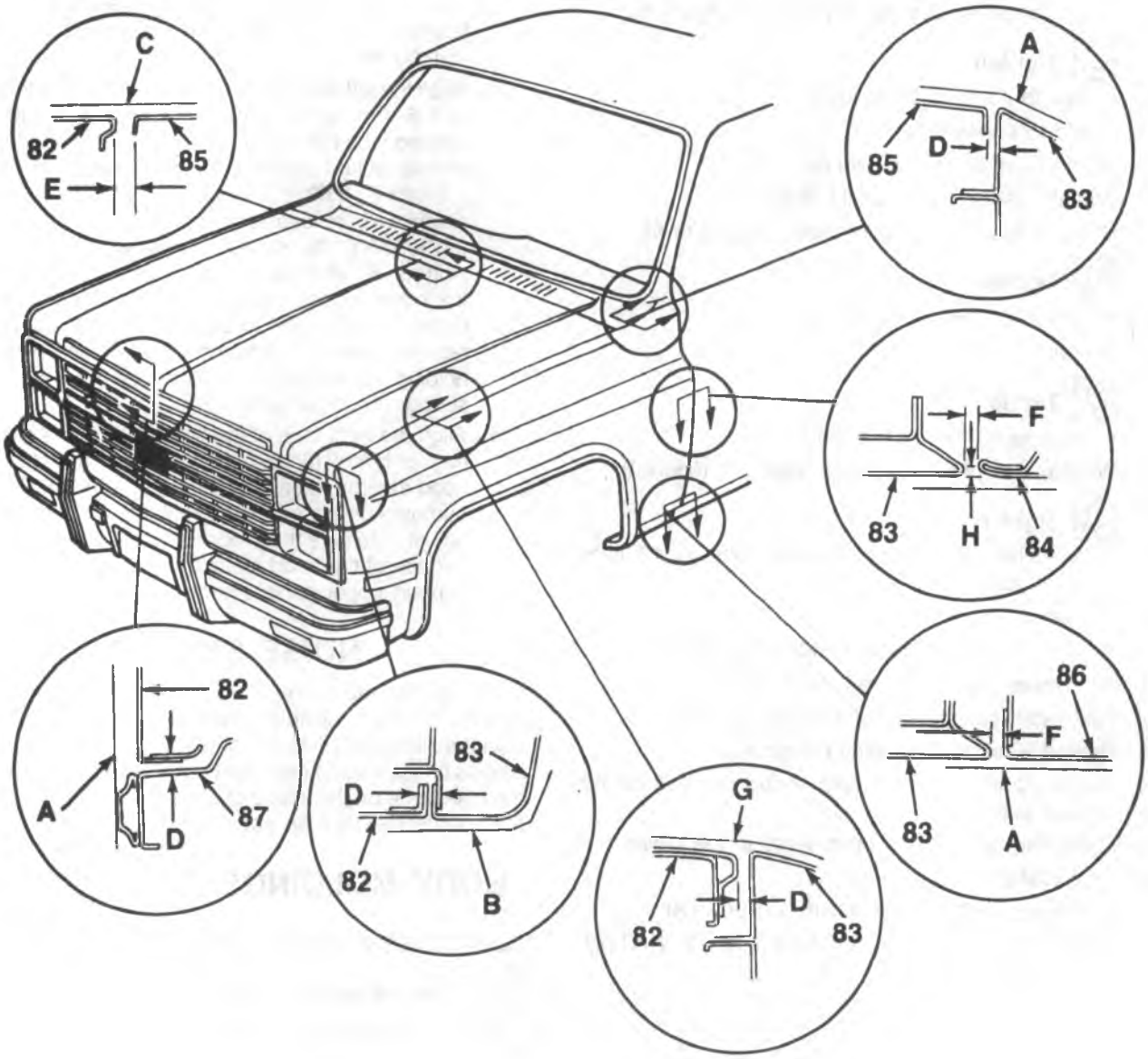

A. Flush Fit
B. Flush ± 1 mm (0.03-inch)
C. Flush ± 1.5 mm (0.06-inch)
D. 4.6 mm ± 1 mm (0.18-inch ± 0.03-inch)
E. 8 mm ± 1 mm (0.31-inch ± 0.03-inch)
F. 5 mm ± 2.3 mm (0.19-inch ± 0.09-inch)
G. Flush + 0.00 mm or − 1.5 mm (+0.00-inch or −0.06-inch)
H. 2.1 mm (0.08-inch)
82. Hood
83. Fender
84. Door
85. Cowl Vent Grille
86. Rocker Panel
87. Radiator Support Upper Panel

L0504

Figure 13—Sheet Metal Gap Specifications

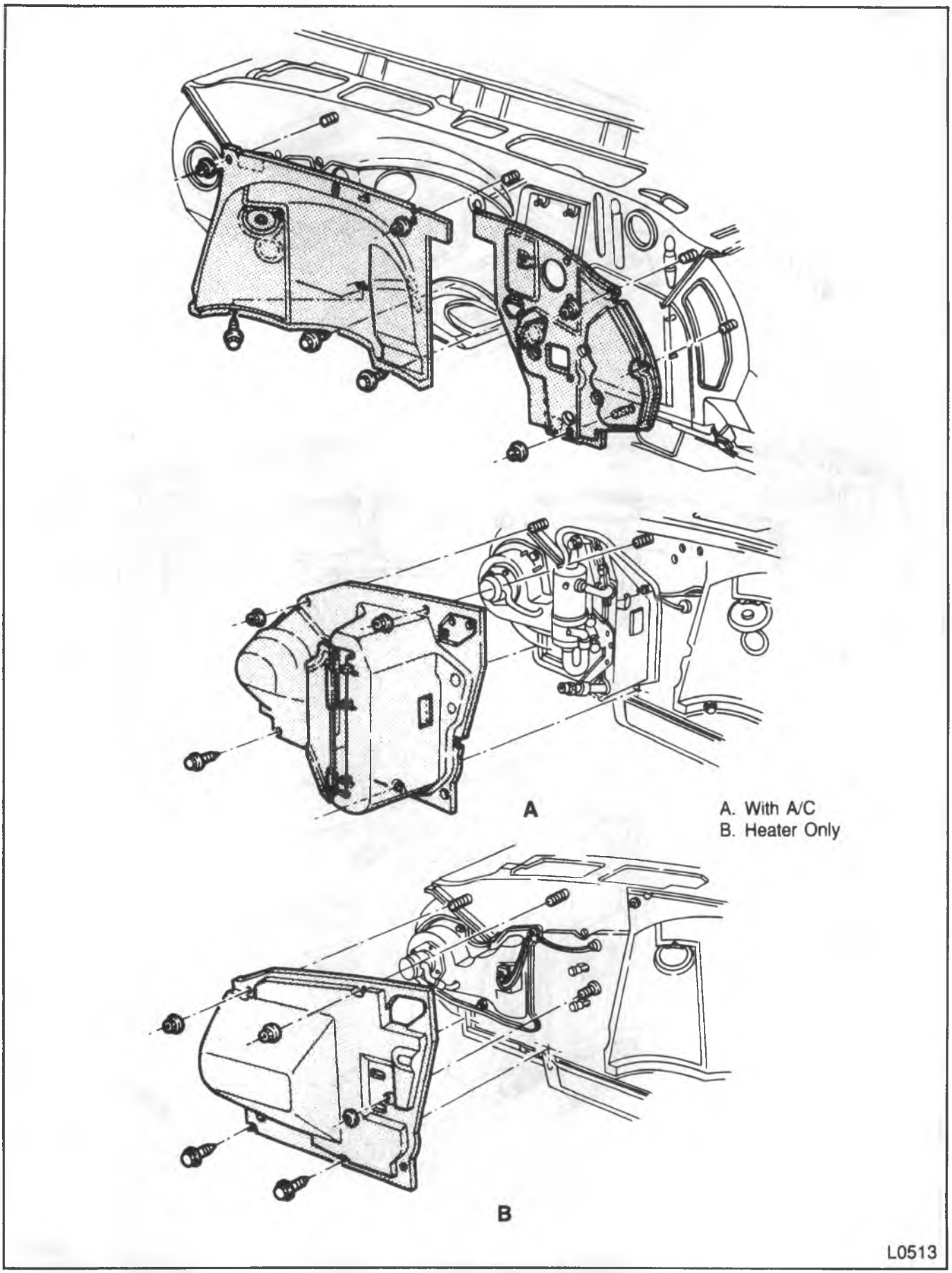

Figure 14—Noise Shields (6.2L over 10,000 GVWR)—Dash Front

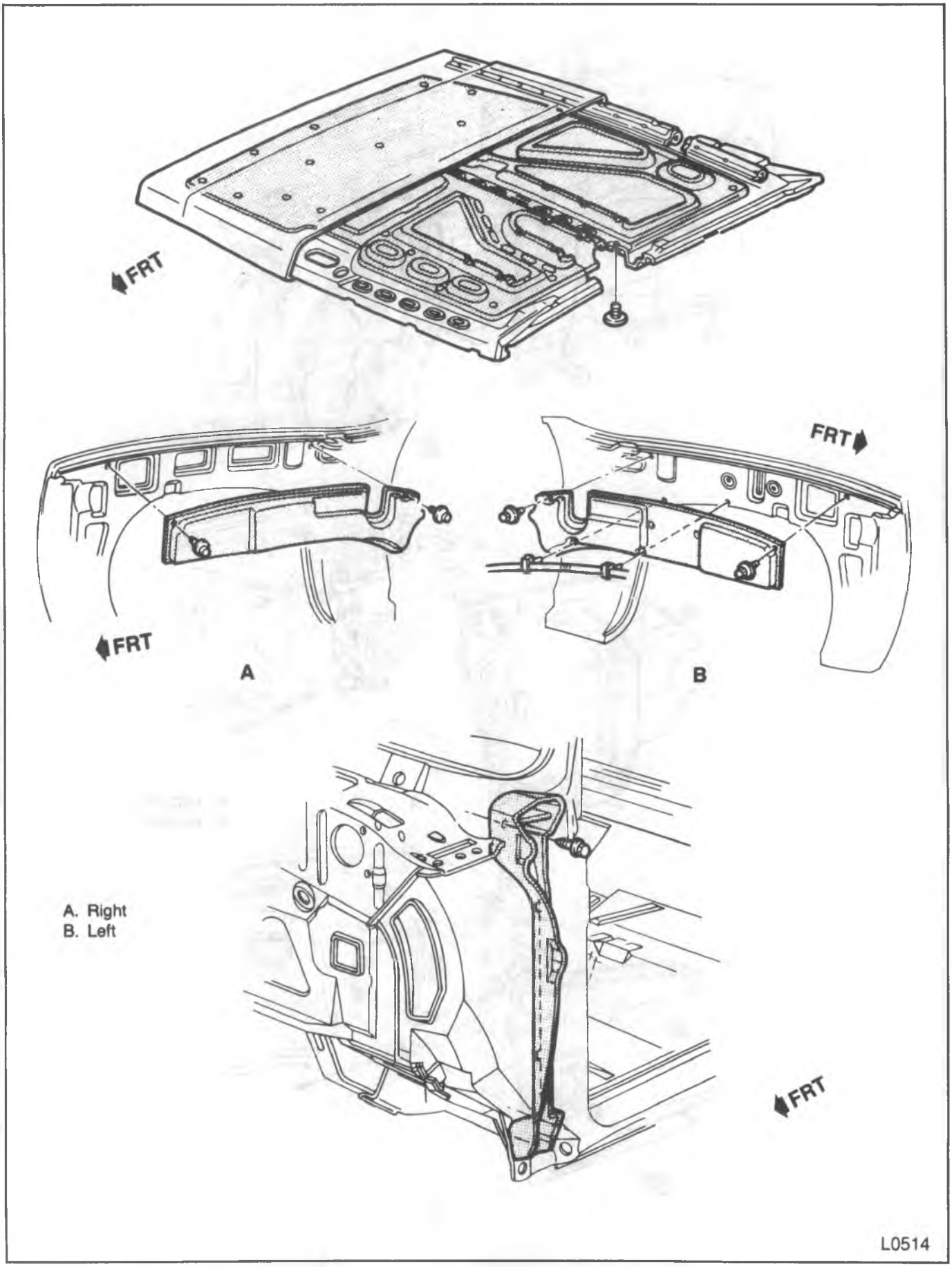

Figure 15—Noise Shields (6.2L over 10,000 GVWR)—Fenders, Hood, Cowl/Fenders

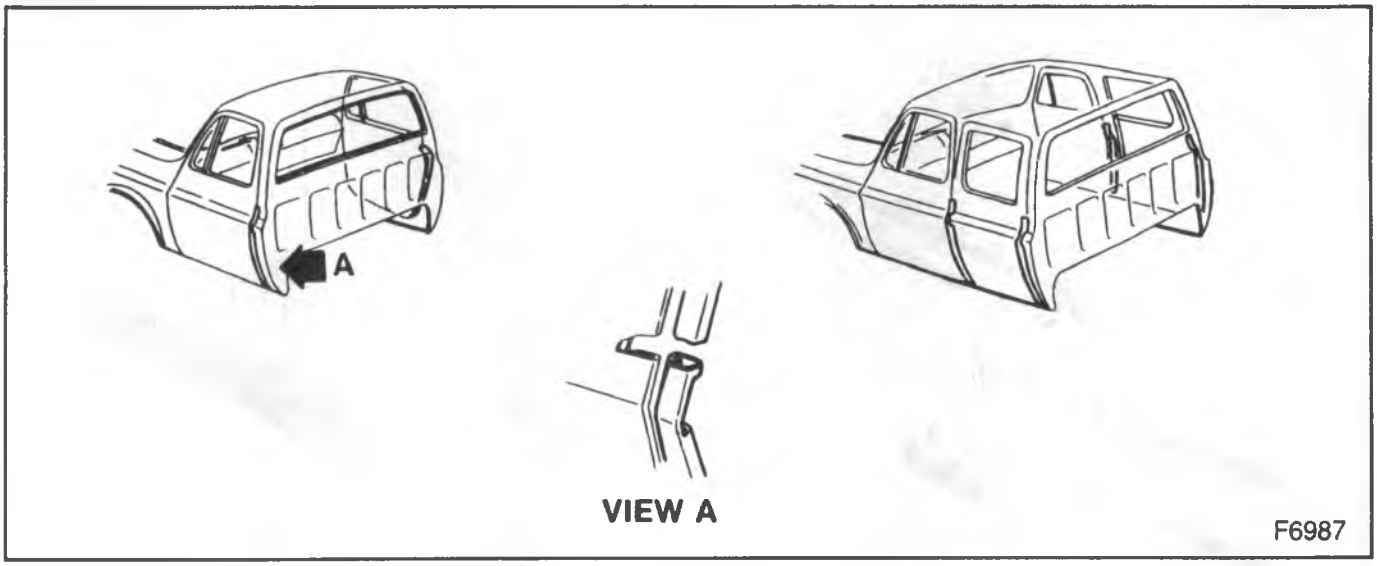

Figure 16—Door Edge Guard Molding

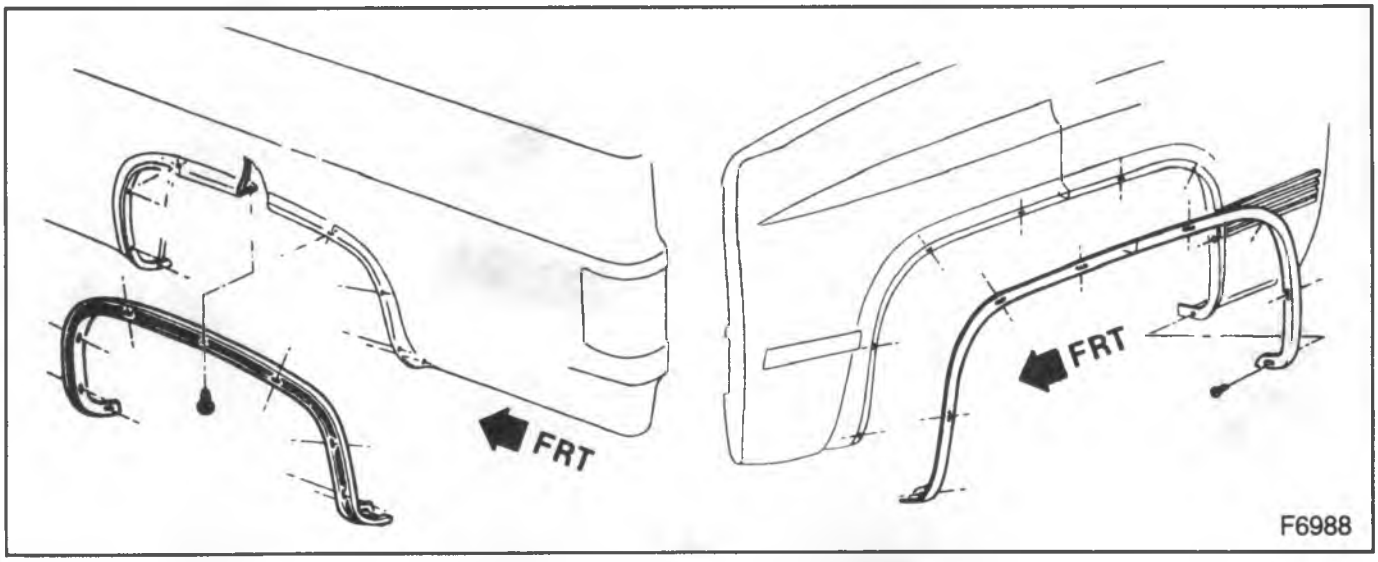

Figure 17—Wheel Opening Moldings

2. The body area and the temperature of the item to be applied must be at a temperature range of 27° to 32°C (85° to 90°F). Apply heat to the body area and the backing on the item if necessary.
3. Remove the backing by peeling it away.
4. Mount the item and apply pressure evenly over it or along the molding to wet out at least 75 percent of the adhesive.
5. If an emblem or nameplate has a premask, remove it by pulling it back onto itself. Do not lift the premask straight up.

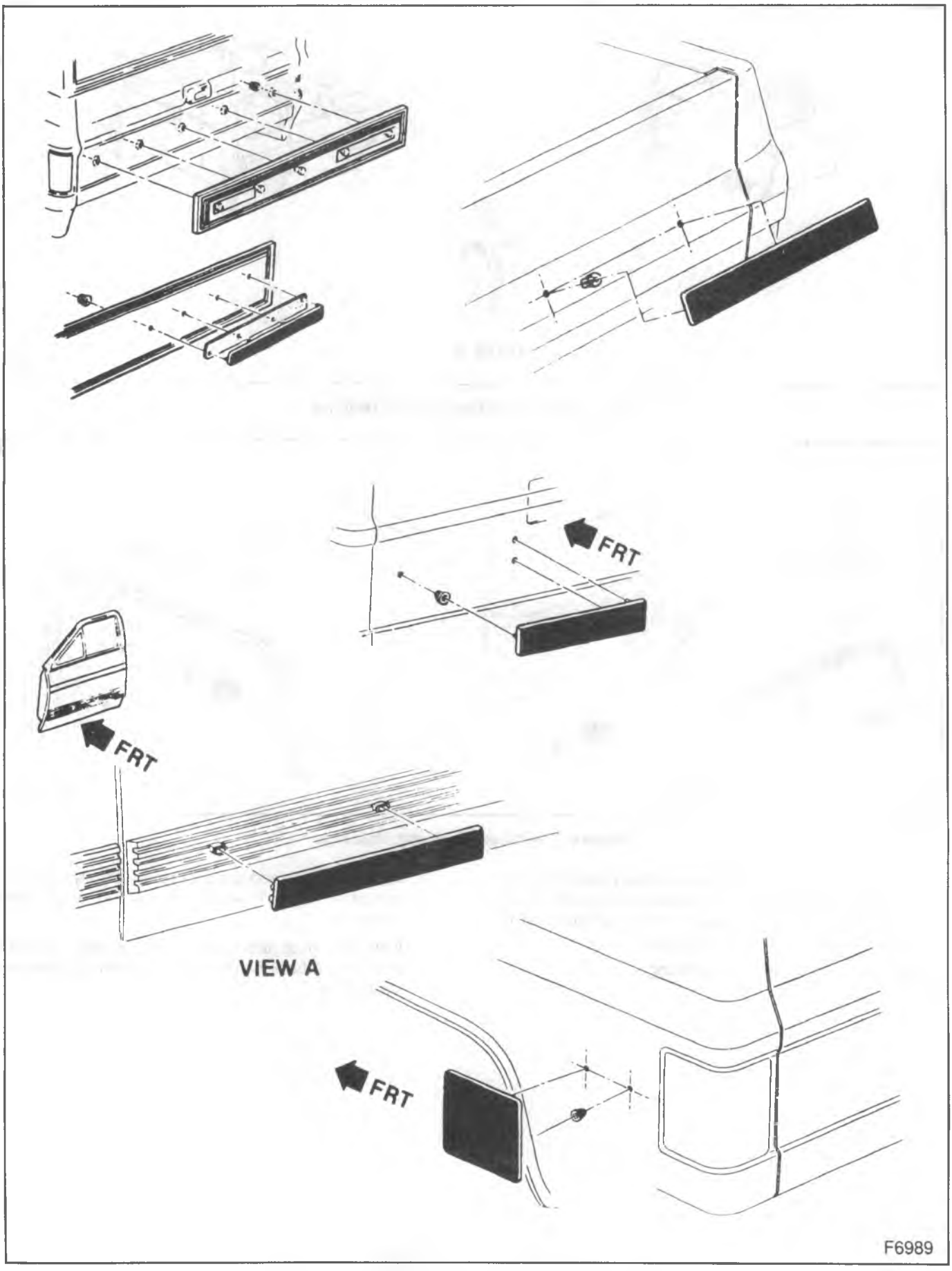

Figure 18—Retainer Held Nameplates and Trim

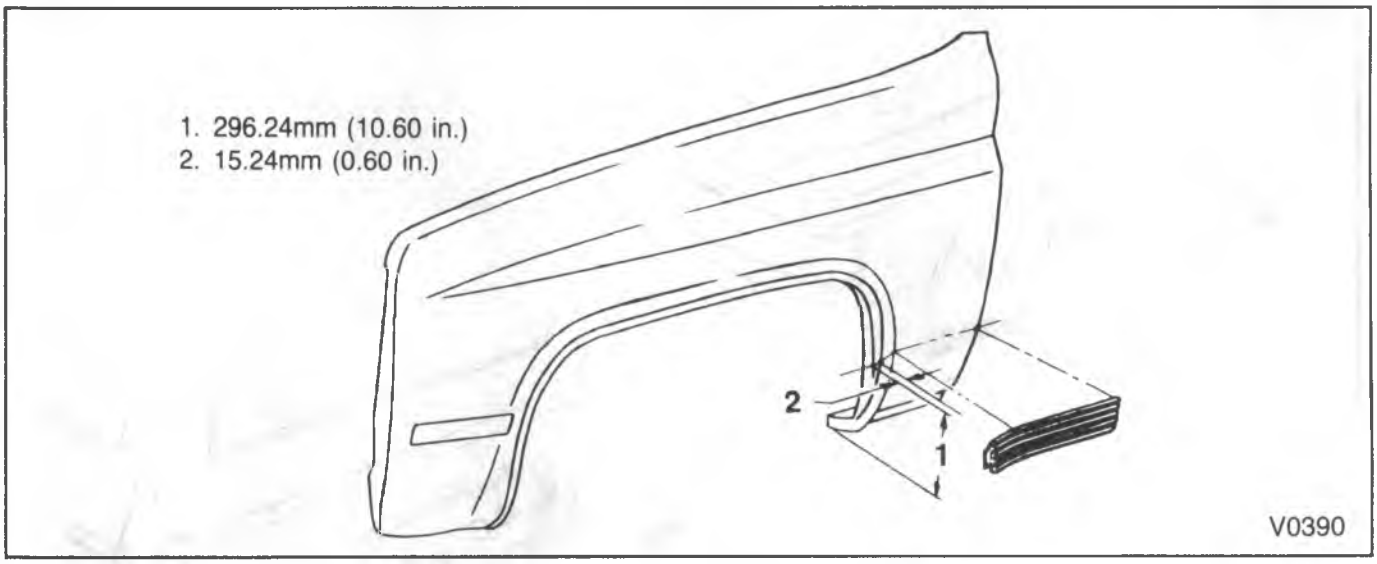

Figure 19—Front Fender Molding

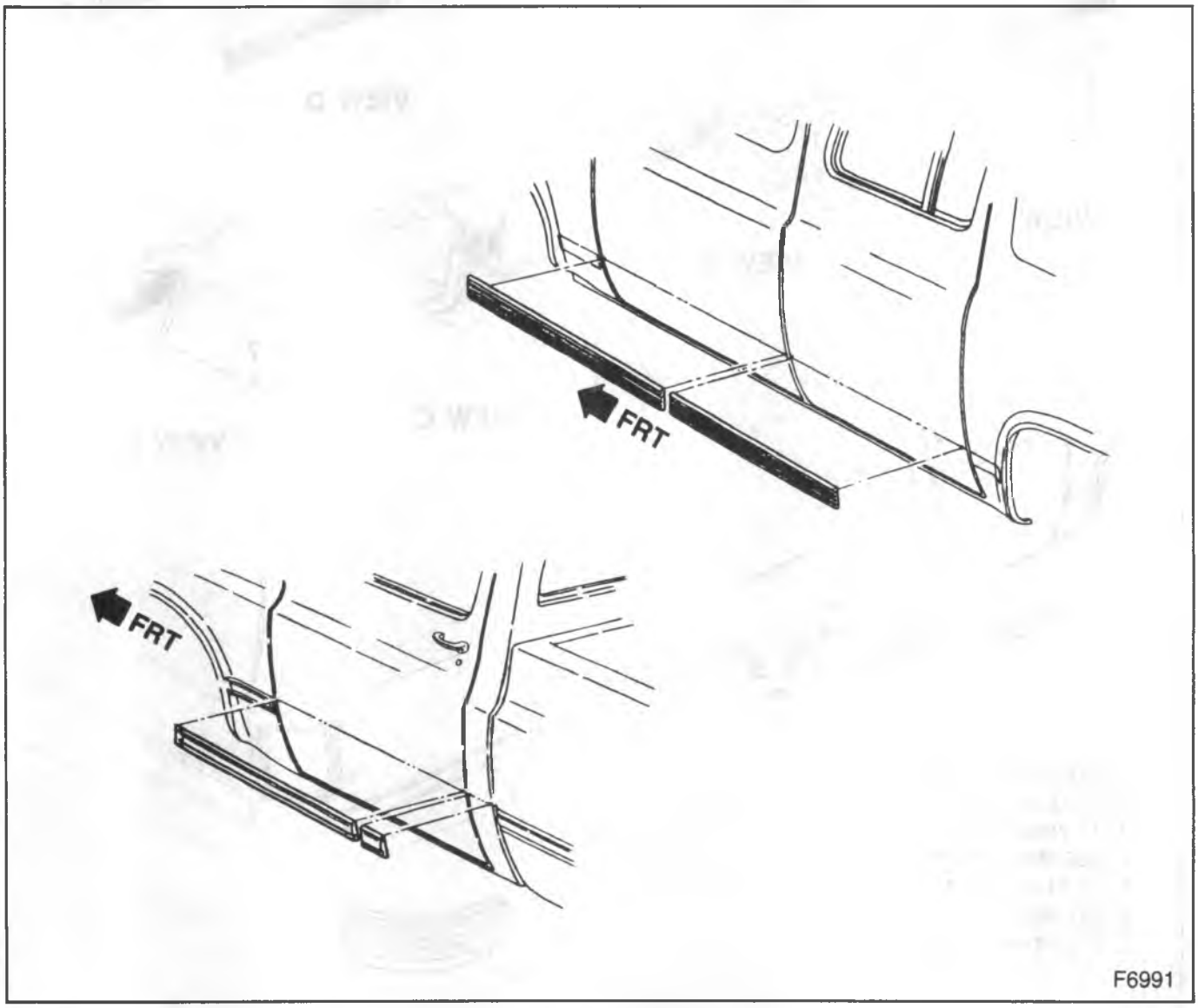

Figure 20—Door Moldings

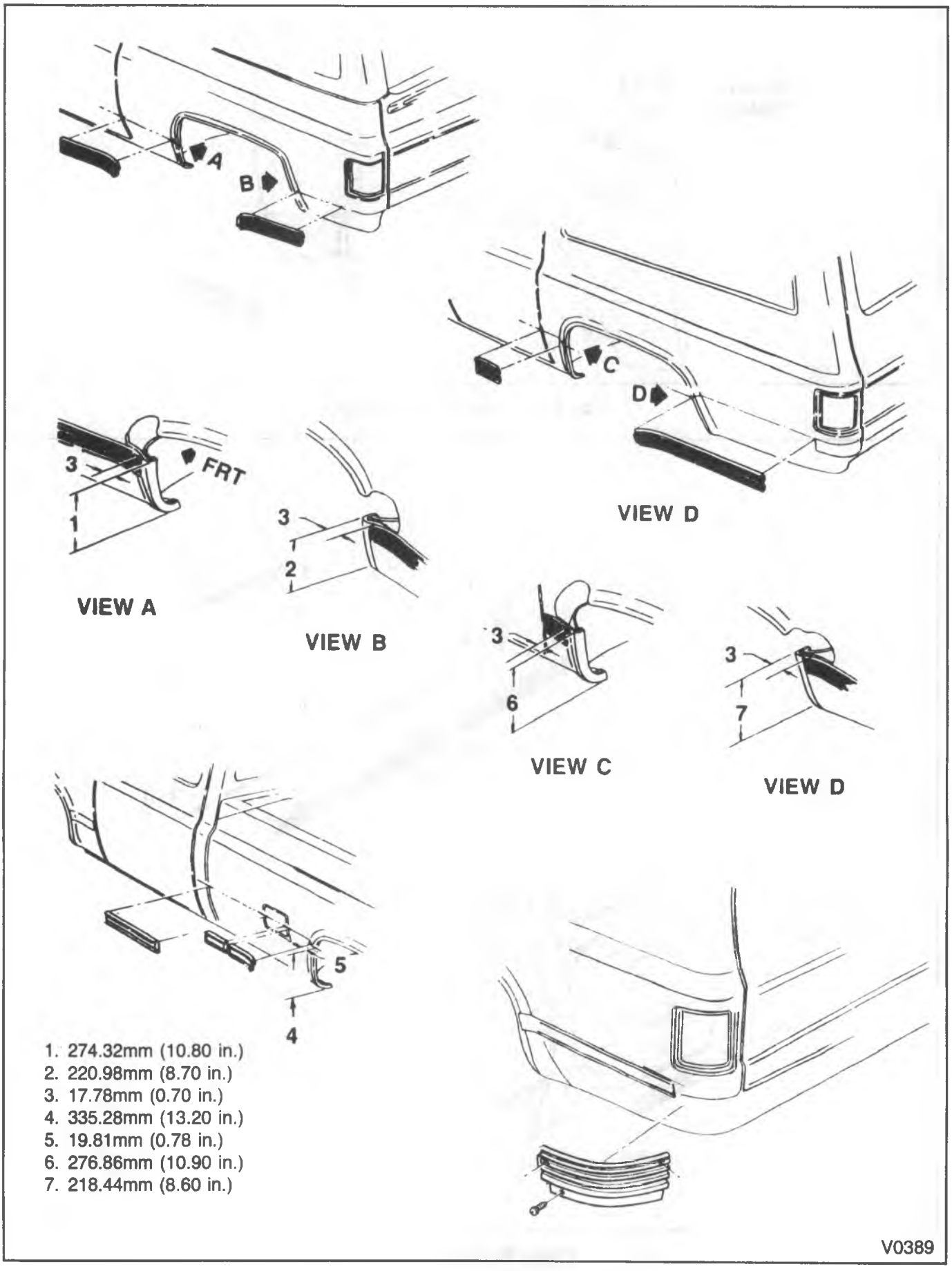

Figure 21—Side Body Moldings

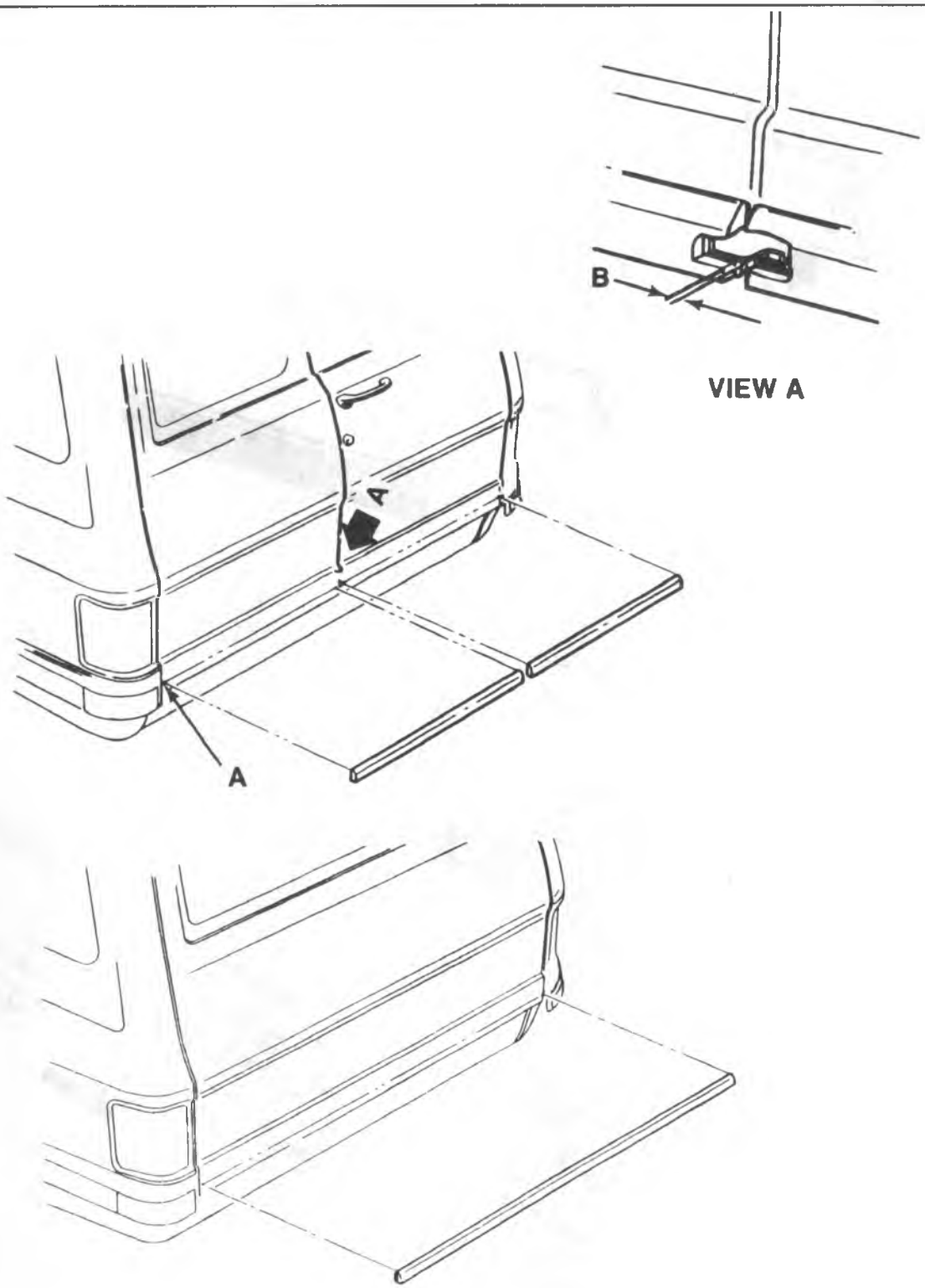

A. Align the top edge of the molding with the top edge of the body side lower right rear extension.
B. 2.54mm (0.10 in.)

V0388

Figure 22—Rear Door and End Gate Moldings

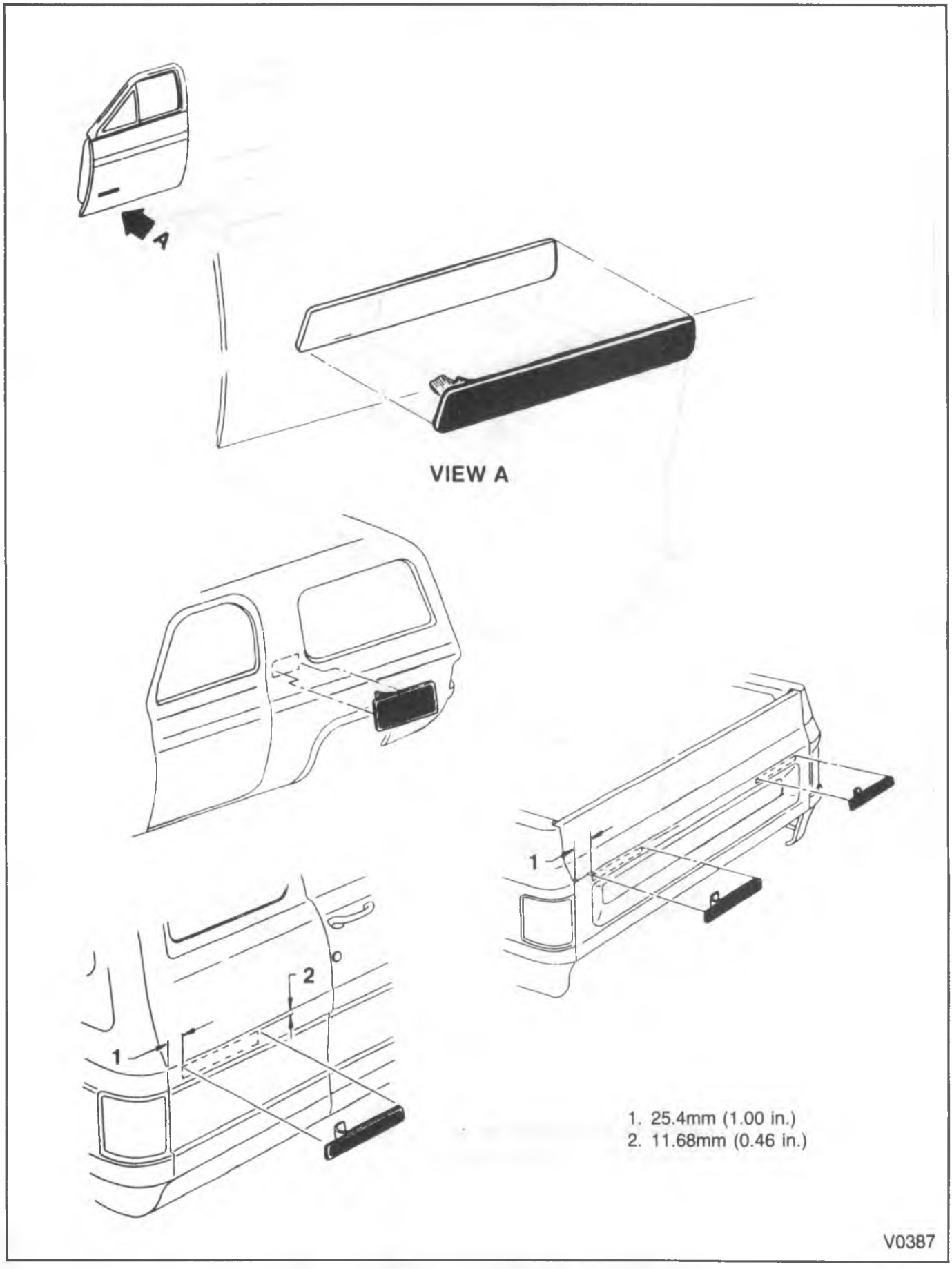

Figure 23—Adhesive-Retained Emblems and Nameplates

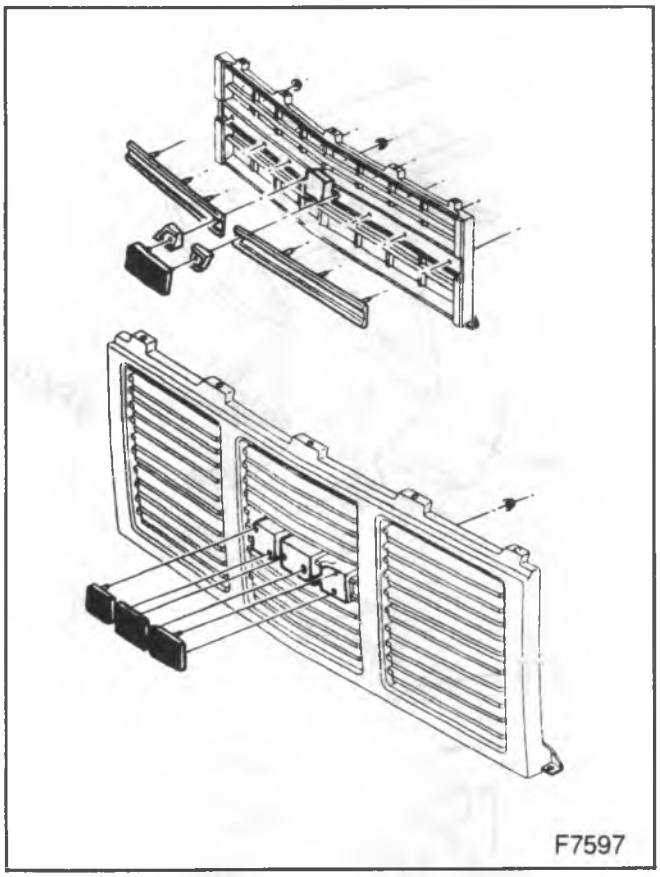

Figure 24—Grille Emblems

CAB MOUNT REPLACEMENT

When changing cab mounts, it is important to properly support the frame while changing the mount. If only one mount is changed, the entire side on which the mount is placed must be lowered enough to provide clearance for the mount.

Remove or Disconnect (Figures 25 and 26)

- Raise the vehicle slightly on the hoist.
- Place jack stands under the body on the side of the vehicle where the mounts will be placed.

1. Bolt (279), retainer (278), and lower cushion (277) or nut (283), washer (282), cushion (277) and spacer (281).

- Lower the hoist enough to leave the body supported by the jacks.

2. Shim (275) and upper cushion (276).

Install or Connect (Figures 25 and 26)

1. Upper cushion (276) and shim (275).

- Raise the frame on the hoist slightly.

NOTICE: See "Notice" on page 2B-1 of this section.

2. Lower cushion (277), retainer (278) and bolt (279) or spacer (281), cushion (277), washer (282) and nut (283).

- Remove the jacks.

Tighten

- Bolts to 75 N•m (55 ft. lbs.).
- Nuts to 47 N•m (35 ft. lbs.).

- Lower the hoist.

ANTI-CORROSION TREATMENT

This vehicle was designed and built to resist corrosion. Application of additional rust-inhibiting materials is not necessary or required under the 6-year/100,000 mile corrosion coverage.

- Some after-manufacture rustproofing may create a potential environment which reduces the corrosion resistance designed and built into this vehicle.
- Depending upon application technique, some after-manufacture rustproofing could result in damage or failure of some electrical or mechanical systems of the vehicle.
- Repairs to correct damage or malfunctions caused by after-manufacture rustproofing are not covered under any of the GM New Vehicle Warranties.

SHEET METAL REPAIR

To help prevent rust, special anti-corrosion materials are used on interior surfaces of metal panels. These materials include special metals such as one-sided and two-sided galvanized, zincrometal and zinc-iron alloy steels. These specially-treated materials are used in fenders, doors, quarter panels, rocker panels, floor pans and other critical areas.

Spray-on materials such as zinc-rich primers and waxes are also applied to interior surfaces. These are mainly used in areas where moisture might gather. Sealers are applied along exposed joints, and moisture-repelling asphaltic sound deadeners are applied inside wheel wells and doors and on some underbody parts.

If these special treatments are disturbed while repairing damaged areas, the metals may be left unprotected. This could lead to corrosion; therefore, these surfaces should be coated with service-type anti-corrosion materials. Use the following steps in applying the materials.

1. **Clean-up and Preparation**
   Depending on the location of the area, sandblasting, scraping, wire brushing, sandpaper and steel wool may be used to remove residue.
2. **Applying Primer Coats**
   Prime all bare metal with an acrylic chromate material.
3. **Applying Sealers**
   Seal all flanged joints, overlap joints and seams with a medium-bodied sealer which stays flexible and is paintable.
   Use a heavy-bodied caulking material for all open joints which require bridging of sealer to close a gap.
4. **Applying Color**
   If areas such as underbody, hem flanges, exposed joints and engine compartment need color, follow conventional refinishing preparation, undercoat build-up, and color application procedures. Rubout and extensive sanding of the undercoats is not necessary.

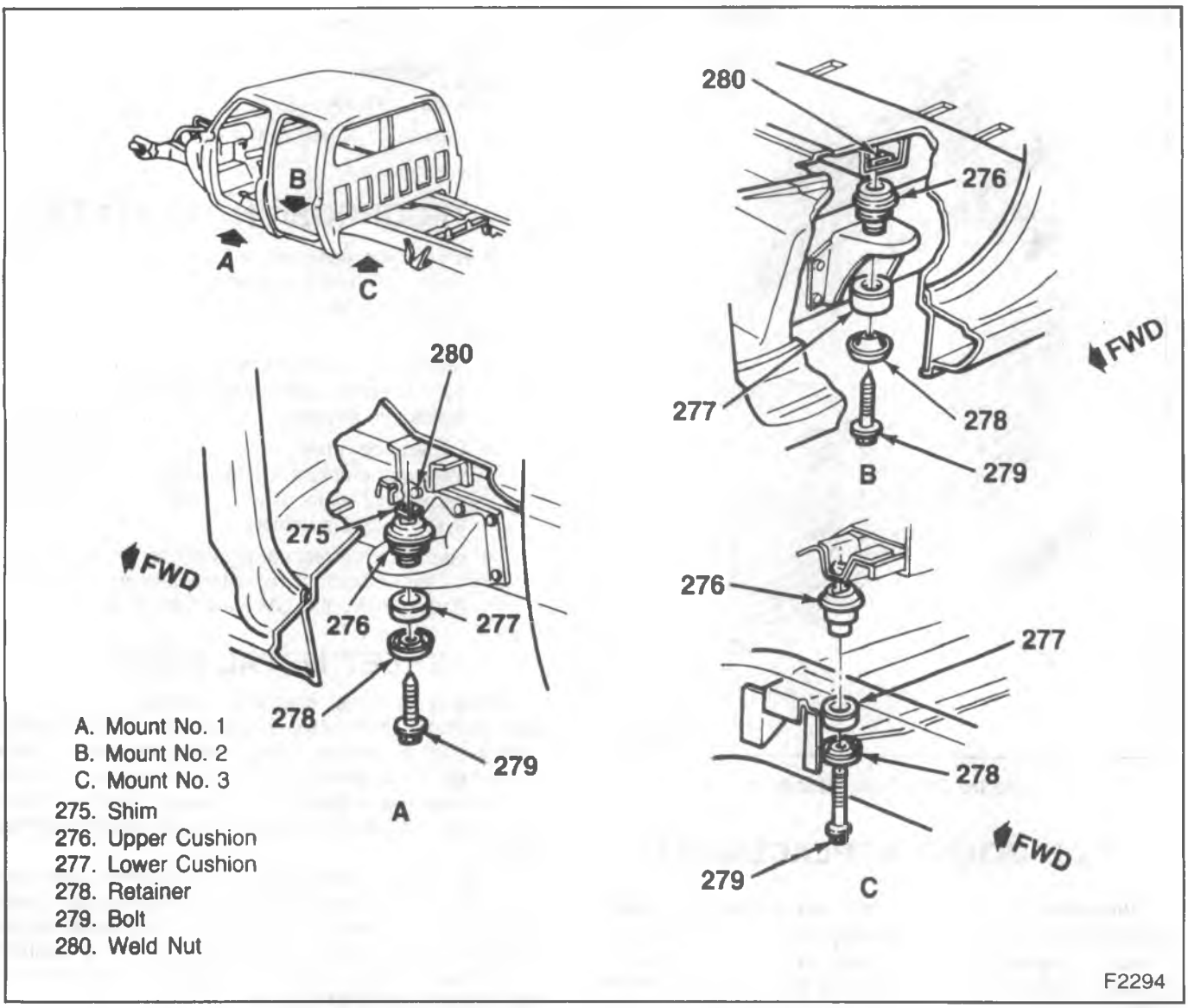

Figure 25—Cab Mounts for the R/V Chassis with a Bonus or Crew Cab

5. **Applying Deadeners**
   Use a heavy-bodied undercoat with a rubberized or asphaltic base. Areas for application can be determined by original production application.
6. **Applying Anti-Corrosion Material**
   Use a light-bodied material designed to penetrate between close metal-to-metal surfaces such as pinch-weld joints, hem flanges, and other attaching points where metal surfaces are difficult to coat with conventional materials.
7. **Conventional Undercoating**
   Apply to large areas such as doors, hoods, fenders, etc. Use care not to spray material into door hardware such as locks, run channels and window regulators.
   On the underbody the material should not be applied to any moving or rotating parts.
   After undercoating, make sure that all body drain holes are open.

ANTI-CHIP COATING REPLACEMENT

The rocker panels were treated with a chip resistant coating before the color coat application. When these areas are being repaired the anti-chip coating should be applied before the paint.

1. Remove the old paint and special coating from the panels.
2. Sand the area smooth.
3. Apply primer to the surface.
4. Mix the anti-chip material such as Immont R-M 891 or PPG Roadguard DX-54 following the manufacturer's directions.
5. Apply 4 to 6 coats of the mixture with a feed gun, following manufacturer's direction for gun pressure and drying time.
6. Apply paint.

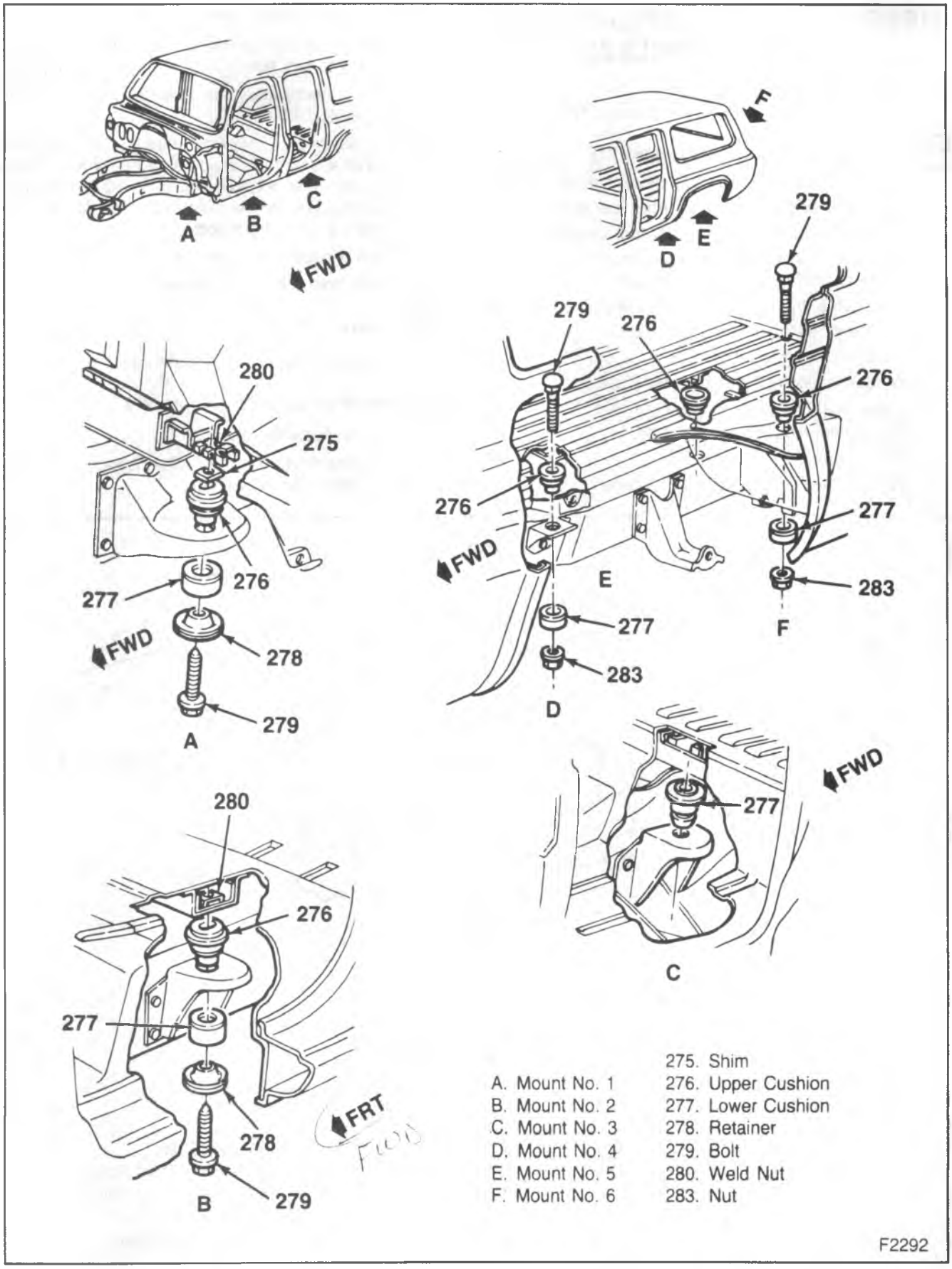

Figure 26—Cab Mounts for the Suburban

FIBERGLASS TOP REPLACEMENT (UTILITY VEHICLES)

Tool Required:

J 35808 T-40 Tamper Resistant Torx Bit

Remove or Disconnect (Figure 27)

1. Left rear seat belt retractor from top assembly (304).
2. Right rear seat belt retractor from top assembly.
3. Both hand rail assemblies from top assembly.
4. Electrical connector access cover from left front pillar of top assembly. Unplug connector.
5. Rear dome light assembly and wiring.
6. Cap weatherstrip reveal, right side.
7. Reveal molding, right side.
8. Window glass from molding, right side.
9. Glass weatherstrip from top, right side.
10. Cap weatherstrip reveal, left side.
11. Reveal molding, left side.
12. Window glass from molding, left side.
13. Glass weatherstrip from top, left side.
14. Side panel trim screws at rear of panels to gain access to hex bolts (300), then remove bolts (300).
15. Top assembly mounting bolts (301) and (302), using J 35808.
16. Top assembly (304) from vehicle. This requires the use of a sling fabricated out of heavy rope wrapped through side window openings and rear window opening. Secure the sling to a chain fall and slowly raise top away from body.
17. Rear window run channel.
18. Seals from the top assembly.

Clean

- Seal areas using 3M Release Agent (or equivalent).

Install or Connect (Figure 27)

1. Rear window run channel.
2. Weatherstrips, using GM Weatherstrip Adhesive p/n 12345097 (or equivalent).

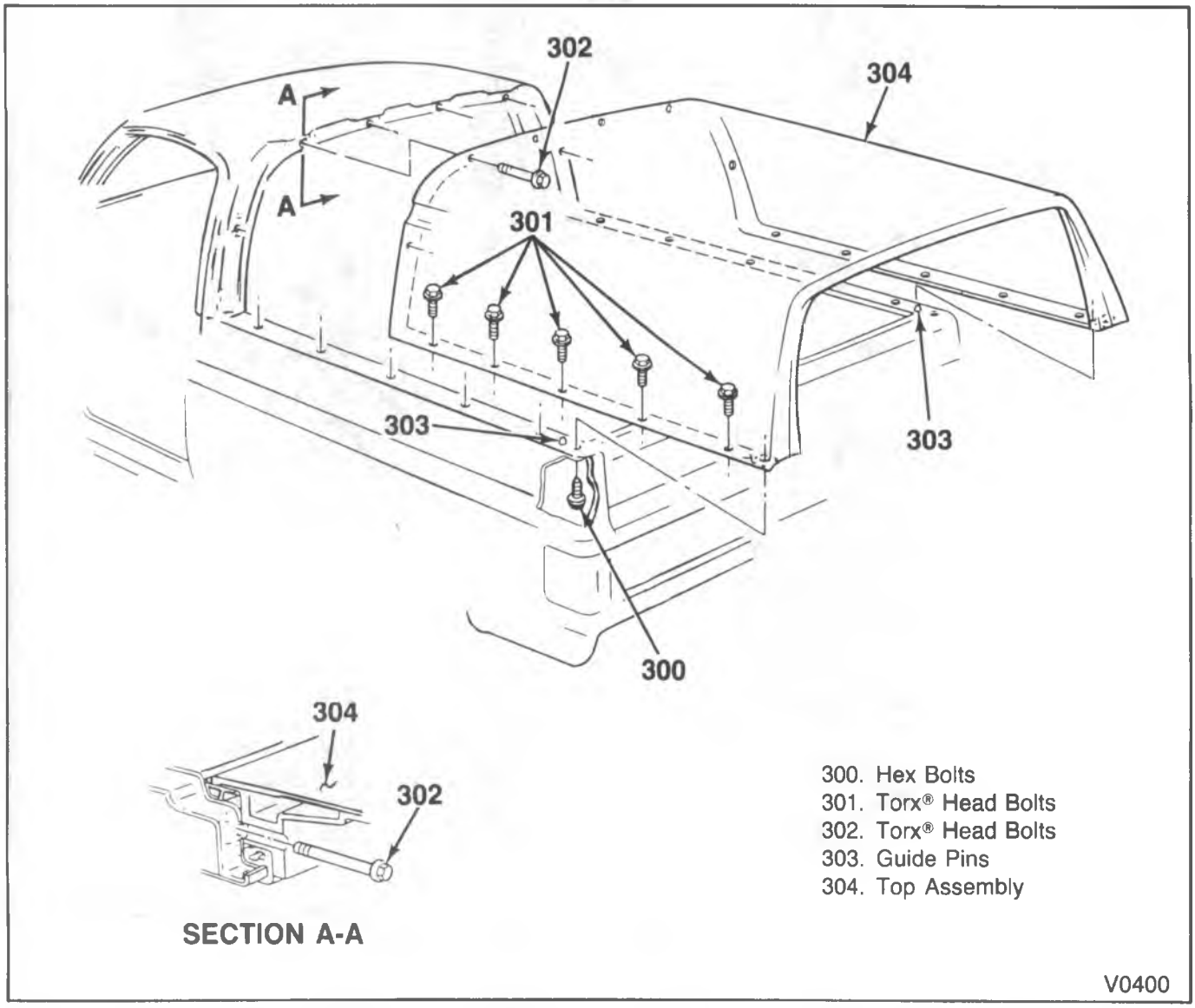

Figure 27—Fiberglass Top Attaching Points

3. Top assembly (304) onto body, using sling as outlined above.
   - Place top assembly onto box using the rear guide pins (303) as locators.
   - Remove the sling.
   - Clamp top assembly in direction of arrow Z at points X and Y.
4. Mounting bolts (301), using J 35808, starting with the bolts at the rear and working forward, as shown in figure 27. When bolts (#1 through #4) are in place, remove clamp and install bolt #5. Next, install hex bolts (300) upwards into the top assembly.
5. Bolts (302) across front of top assembly into the cab, using J 35808.
6. Glass weatherstrip, left side, onto top assembly.
7. Set window glass into place, left side.
8. Reveal molding, left side, and reveal molding cap.
9. Glass weatherstrip, right side, onto top.
10. Set window glass into place, right side.
11. Reveal molding, right side, and reveal molding cap.
12. Screws into side trim panels.
13. Right rear seat belt retractor onto top assembly.
14. Left rear seat belt retractor onto top assembly.
15. Dome light assembly and wiring.
16. Electrical connector access cover. Plug in connector.
17. Both hand rails onto top assembly.

PAINT

The R/V Models have been finished with a basecoat/clearcoat paint process (figure 28). If repair or repainting is necessary, the technician should use refinishing methods appropriate to this process.

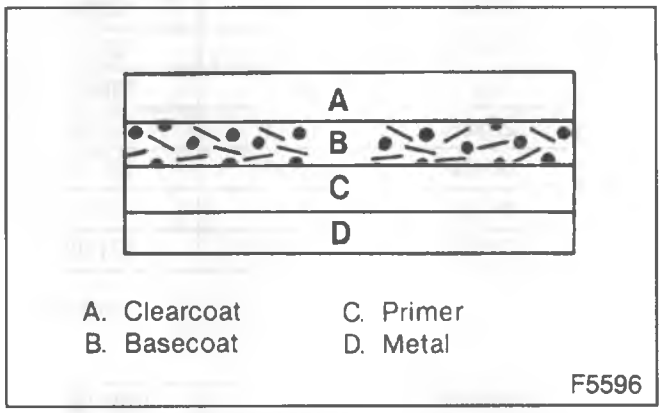

Figure 28—Basecoat/Clearcoat Finish

PAINT CODES

The following are the paint code letters and numbers for the refinishing paint suppliers.

DuPont refinish paints are available in:

- L-Lucite*-Acrylic Lacquer.
- A-Centari*-Acrylic Enamel.
- D-Dulux*-Enamel.
- 355S-Flexible Additive.
- 123 Vinyl Lacquer-Chip resistant.

When ordering DuPont paint, use "L," "A," "D," 355S or 123 with the appropriate DuPont code.

Ditzler refinish paints are available in:

- DBU-Deltron Acrylic Basecoat/Clearcoat.
- DDL-Duracryl-Acrylic Lacquer.
- DAR-Delstar-Acrylic Enamel.
- DAU-Deltron-Acrylic Urethane.
- UCV-Vinyl Colors

EXTERIOR COLORS

GM CODE	FISHER CODE	COLOR NAME	DUPONT CODE	SHERWIN WILLIAMS CODE	DITZLER CODE	RINSHED MASON CODE
12	5111	Frost White	817	39567	2185	1347
19	5118	Midnight Black	99	F10B1738*	9000/9300	
22	9656	Brilliant Blue Met.	B9126	44150	4307	21018
23	7154	Med. Blue	B8041	30527	3250	11500
24	9222	Aspen Blue Met.	B8894	38144	4110	18120
27	9264	Smoke Blue Met.	B8944	39337	4146	19031
29	7349	Midnight Blue	B8139	31514	3362	12283
33	9207	Mojave Beige	B8945	39338	4152	19028
34	9208	Sunset Gold Met.*	B8895	38145	4107	18116
41	8555	Onyx Black	99	33756	9700	13572
42	9203	Mariner Blue	B8943	40381	16813	19027
46	7156	Dark Green	B8046	30530	3255	11505
50	8624	Summit White	B8550	34851	3800	15255
61	8265	Tan	B8462	34070	3686	14241
71	7753	Red Orange	B8250	32384	3463	12884
72	7475	Apple Red	B8241	32097	3464	12885
74	9260	Fire Red	B8946	34339	4154	19030
90	8798	Steel Gray Met.	B8629	35367	3916	16118
96	8867	Quicksilver Met.	B8795	36457	4023	18112
97	9658	Slate Met.	B9127	44153	4313	21024
98	8863	Midnight Blue Met.	B8745	36458	4003	17118

* = Trim Color

GMTB-3219-2A

GM CODE	FISHER CODE	COLOR NAME	DUPONT CODE	SHERWIN WILLIAMS CODE	DITZLER CODE	RINSHED MASON CODE
INTERIOR COLORS 12% GLOSS						
13AN	9653	Lt. Gray	C9109	44438	35203	21029
13BN	9654	Med. Gray	C9110	44439	35205	21027
24CN	9059	Dk. Blue	C8792	36478	16323	17124
47CN	9104	Dk. Red	C9007	42602	73381	20061
60BN	9205	Med. Cognac	C8809	38394	26281	18055
INTERIOR COLORS 5% GLOSS						
13CN	9655	Dk. Gray	C9111	44440	35206	21028
24DN	8576	Very Dk. Blue①	C8539	34606	16092	16045
47CN	9104	Dk. Red①	C9007	42601	73380	20062
60CN	9099	Dk. Cognac	C8810	38392	26284	18057

Note: When ordering Dupont colors, specify:
A — 304 Vinyl Resin (instrument panel)
B — 305 Vinyl Resin (all remaining interior parts except seats)
C — 306 Vinyl Resin (seats and vinyl roof)
① I/P color usage

GMTB-3220-2A

SPECIFICATIONS

FASTENER TORQUE

Item	N·m	Ft. Lbs.
R/V Models		
Hood Hinge to Hood Bolts	25	18
Hood Hinge to Cowl Bolts	43	32
Spring Assembly to Hood Bolts	25	18
Spring Assembly to Fender Bolts	25	18
Primary Hood Latch Bracket to Radiator Support Bolts	27	20
Bracket to Primary Hood Latch Bolts	27	20
Secondary Hood Latch to Hood Bolts	27	20
Sheet Metal Support to Radiator Support Bolts	17	13
Radiator Support to Fender Bolts	17	13
Radiator Support to Frame Nuts	47	35
Wheelhouse to Fender Bolt	43	31
Fender to Cowl Bolt	43	31
Upper Fender to Door Pillar Bolt	43	31
Wheelhouse Panel Reinforcement to Underbody Bolts (52)	17	13
(53)	47	35
Wheelhouse to Radiator Support Bolts	17	13
Fleetside Models		
All Rear Fender to Side Panel Bolts, and Nuts	17	13
R/V Cab Mounts		
Cab Mount Bolts	75	55
Cab Mount Nuts	47	35

TB-3098-2A

SPECIAL TOOLS

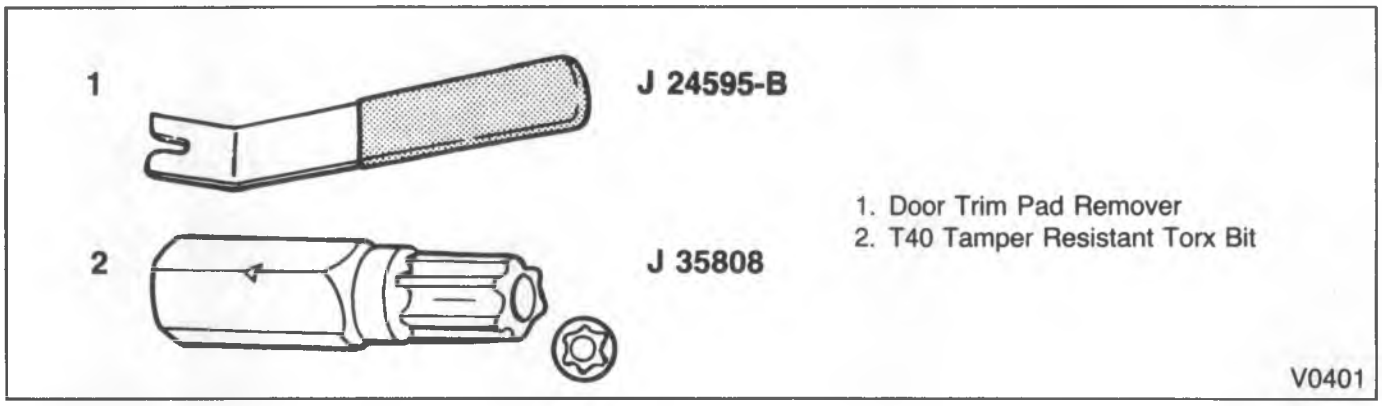

SECTION 3

STEERING, SUSPENSION, WHEELS AND TIRES

CONTENTS

SUBJECT	PAGE
Front End Alignment	3A-1
Power Steering	3B1-1
Steering Linkage	3B3-1
Steering Column-Standard	3F1-1
Steering Column-Tilt	3F2-1
Front Suspension and Axle	3C-1
Rear Suspension	3D-1
Wheels and Tires	3E-1

SECTION 3A

FRONT END ALIGNMENT

NOTICE: When fasteners are removed, always reinstall them at the same location from which they were removed. If a fastener needs to be replaced, use the correct part number fastener for that application. If the correct part number fastener is not available, a fastener of equal size and strength (or stronger) may be used. Fasteners that are not reused, and those requiring thread locking compound will be called out. The correct torque value must be used when installing fasteners that require it. If the above conditions are not followed, parts or system damage could result.

CONTENTS

SUBJECT	PAGE
Description	3A-1
Definition of Terms	3A-1
Diagnosis	3A-3
On-Vehicle Service	3A-3
Inspection	3A-3
Front End Alignment Requirements	3A-3
Alignment Adjustments	3A-3
Specifications	3A-6

DESCRIPTION

"Front End Alignment" refers to the angular relationship between the front wheels, the front suspension attaching parts and the ground.

Proper front end alignment must be maintained in order to insure efficient, good directional stability and to prevent abnormal tire wear.

The most important factors of front end alignment are wheel toe-in, wheel camber, and axle caster (figure 1).

DEFINITION OF TERMS

CAMBER

Camber is the inward or outward tilting of the front wheel from the vertical. When the wheels tilt outward at the top, the camber is positive (+). When the wheels tilt inward at the top, the camber is negative (−). The amount of tilt measured in degrees from the vertical is called the camber angle. Camber is designed into the front axle assembly of all four-wheel drive vehicles and is non-adjustable.

If camber is extreme or unequal between the wheels, improper steering and excessive tire wear will result. Negative camber causes wear on the inside tire, while positive camber causes wear to the outside.

CASTER (Figure 1)

Caster is the tilting of the wheel axis either forward or backward from the vertical (when viewed from the side of the vehicle.) A backward tilt is positive (+) and a forward tilt is negative (−).

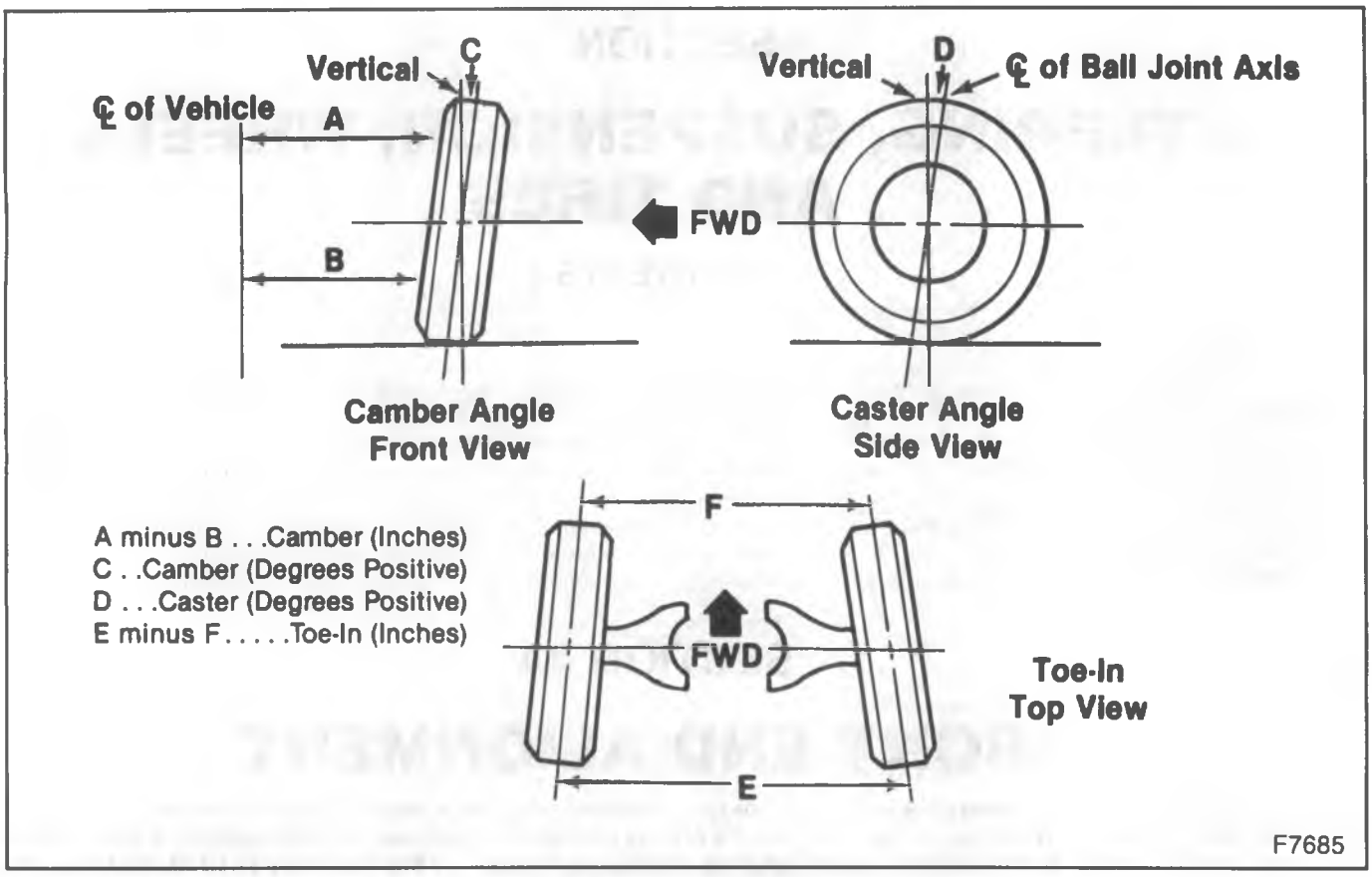

Figure 1—Caster-Camber-Toe-In

On the short and long arm type suspension you cannot see a caster angle without a special instrument, but if you look straight down from the top of the upper control arm to the ground, the ball joints do not line up (fore and aft) when a caster angle other than 0 degree is present. With a positive angle, the lower ball joint would be slightly ahead (toward the front of the vehicle) of the upper ball joint center line. Caster is designed into the front axle assembly on all four-wheel drive vehicles, and is non-adjustable.

TOE-IN

Toe-in is the turning of the front wheels. The actual amount of toe-in is normally a fraction of a degree. Toe-in is measured from the center of the tire treads or from the inside of the tires. The purpose of toe-in is to insure parallel rolling of the front wheels and to offset any small deflections of the wheel support system which occurs when the vehicle is rolling forward. Incorrect toe-in results in excessive tire wear and unstable steering. Toe-in is the last alignment to be set in the front end alignment procedure.

DIAGNOSIS

PROBLEM	POSSIBLE CAUSE	CORRECTION
Noisy Front End	1. Worn tie rod ends. 2. Loose suspension bolts. 3. Lack of proper lubrication. 4. Loose shock absorbers or worn bushings. 5. Loose stabilizer bar.	1. Replace ends. 2. Refer to FRONT SUSPENSION (SEC. 3C). 3. Refer to MAINTENANCE AND LUBRICATION (SEC. 0B). 4. Tighten bolts and/or replace the bushings. 5. Tighten
Wheel Bounce	1. Tire and wheel out of balance. 2. Blister or bump on the tire. 3. Improper shock absorber action. 4. Excessive wheel or tire run-out. 5. Tire "Lead."	1. Refer to WHEELS AND TIRES (SEC. 3E). 2. Replace the tire. 3. Replace the shock absorber. 4. Refer to WHEELS AND TIRES (SEC. 3E). 5. Refer to WHEELS AND TIRES (SEC. 3E).
Excessive Tire Wear	1. Incorrect wheel alignment. 2. Failure to rotate tires. 3. Faulty shock absorbers. 4. Improper tire pressure. 5. Overloaded or improperly loaded vehicle. 6. Broken or sagging springs.	1. Align the wheels. 2. Refer to WHEELS AND TIRES (SEC. 3E). 3. Replace shock absorber. 4. Refer to WHEELS AND TIRES (SEC. 3E). 5. Avoid overloading vehicle. 6. Replace springs.

D0024

ON-VEHICLE SERVICE

INSPECTION

Before making any adjustments affecting caster, camber or toe-in, the following front end inspection should be made:

Inspect (Figure 2)

1. Tires for proper inflation pressure. Refer to WHEELS AND TIRES (SEC. 3E).
2. Front wheel bearing for proper adjustment. Refer to FRONT SUSPENSION AND AXLE (SEC. 3C).
3. Ball joints, tie rod ends, and relay rods. If excessive looseness is noted, correct before adjusting. Refer to STEERING LINKAGE (SEC. 3B3).
4. Wheels and tires for run-out. Refer to WHEELS AND TIRES (SEC. 3E).
5. Dimension "BC" in (figure 2). If not within specifications, the correction must be made before adjusting caster.
6. Steering gear for looseness at the frame.
7. Shock absorbers for leaks or any noticeable noise. Refer to FRONT SUSPENSION AND AXLE (SEC. 3C).
8. Control arms, or stabilizer bar attachments for looseness. Refer to FRONT SUSPENSION AND AXLE (SEC. 3C).
9. Alignment equipment. Follow the manufacturer's instructions.
10. Level of the vehicle. The vehicle must be on a level surface fore and aft and transversely.

FRONT END ALIGNMENT REQUIREMENTS

Satisfactory vehicle operation may occur over a wide range of front end alignment settings. If the settings vary beyond certain tolerances, adjustments are advisable. The "Specifications" at the back of this section is a guideline for vehicle diagnosis or for repairs.

Set the front end alignment to specifications while the vehicle is in its normally loaded condition. Vehicles which are consistently operated with heavy loads should have toe-in adjusted with the vehicle under heavy load. This procedure should result in longer tire life.

ALIGNMENT ADJUSTMENTS

A normal shim pack will leave at least two threads of the bolt exposed beyond the nut. If two threads cannot be obtained, check for damage to the control arms and related parts. The difference between front and rear shim packs must not exceed 7.62 mm (0.30) inch. Front shim pack must be at least 2.54 mm (0.10 inch).

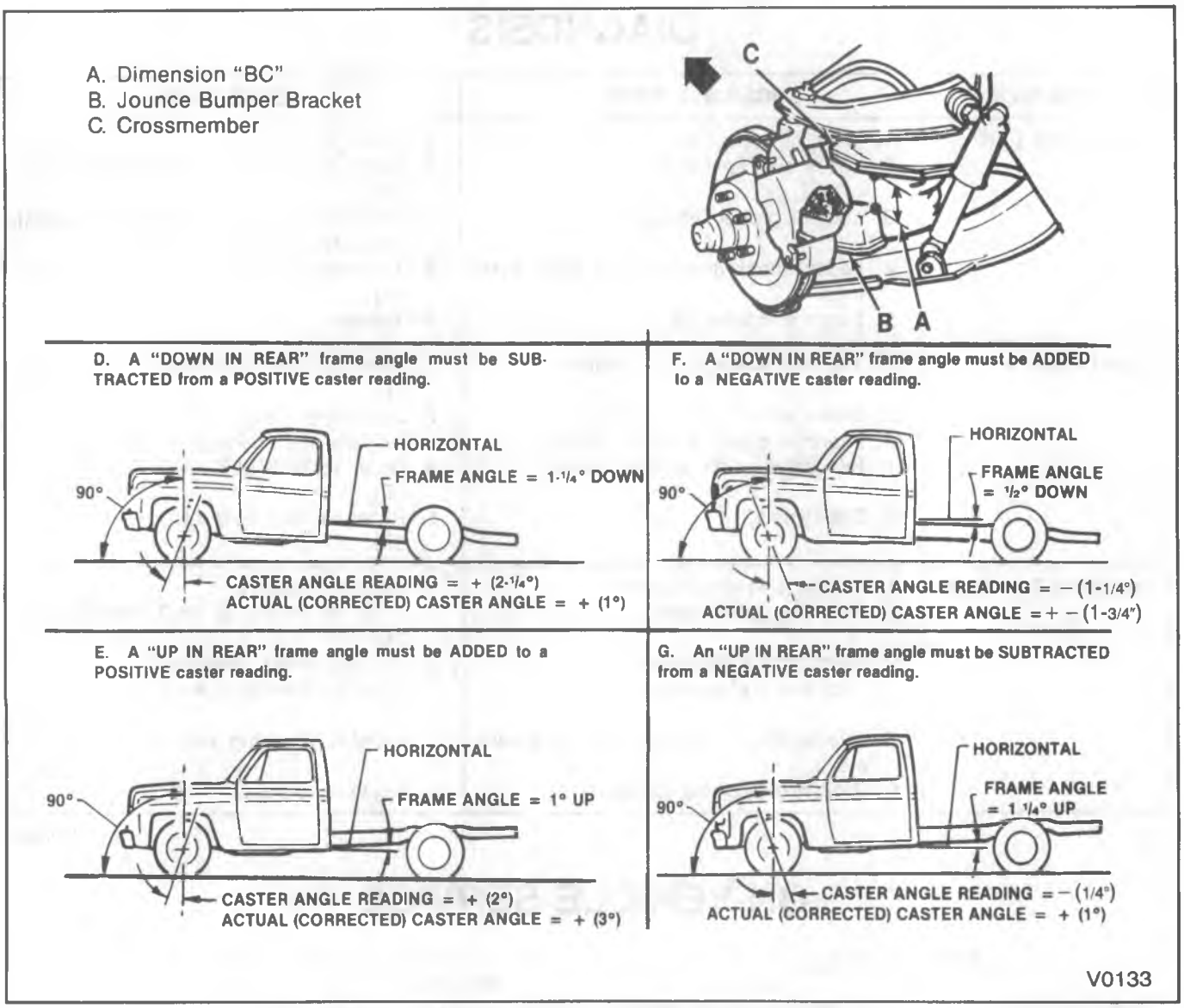

Figure 2—Determining Caster

ACCESS TO SHIM PACKS

Models with 3/4-inch Nut

Jack up the frame to raise the wheel off the ground. This will allow the proper upper control arm to drop down far enough to use a socket on the nuts and permit shim adjustment. Torque to specifications, refer to FRONT SUSPENSION AND AXLE (SEC. 3C).

Models with 7/8-inch Nut

Remove the upper control arm bumper: then follow the same procedure as with 3/4-inch nut. Torque to specifications. Reinstall the upper control arm bumper when alignment is completed. Refer to FRONT SUSPENSION AND AXLE (SEC. 3C).

CASTER

All caster specifications are given with a frame angle of zero. Therefore, it will be necessary to know the angle of the frame (whether "up" in rear or "down" in rear) before a corrected caster reading can be determined. Camber and toe-in can be read "as is" from the alignment equipment.

How to Determine Caster (Figure 2 and 3)

All caster specifications are given with vehicle frame angle of zero.

1. Position the vehicle on a smooth level surface.
2. Use a bubble protractor or inclinometer to measure the frame angle. Frame angle is the degree of tilt in the frame from the level position.
3. Determine whether the frame angle is "up in rear" or "down in rear."
4. Determine the caster angle reading from the alignment equipment.
5. Refer to figure 3. To determine an "actual (corrected) caster reading" with various frame angles and caster readings, one of the following rules apply:
   a. A "**DOWN IN REAR**" frame angle must be **SUBTRACTED** from a **POSITIVE** caster reading.
   b. An "**UP IN REAR**" frame angle must be **ADDED** to a **POSITIVE** caster reading.
   c. A "**DOWN IN REAR**" frame angle must be **ADDED** to a **NEGATIVE** caster reading.
   d. An "**UP IN REAR**" frame angle must be **SUBTRACTED** from a **NEGATIVE** caster reading.

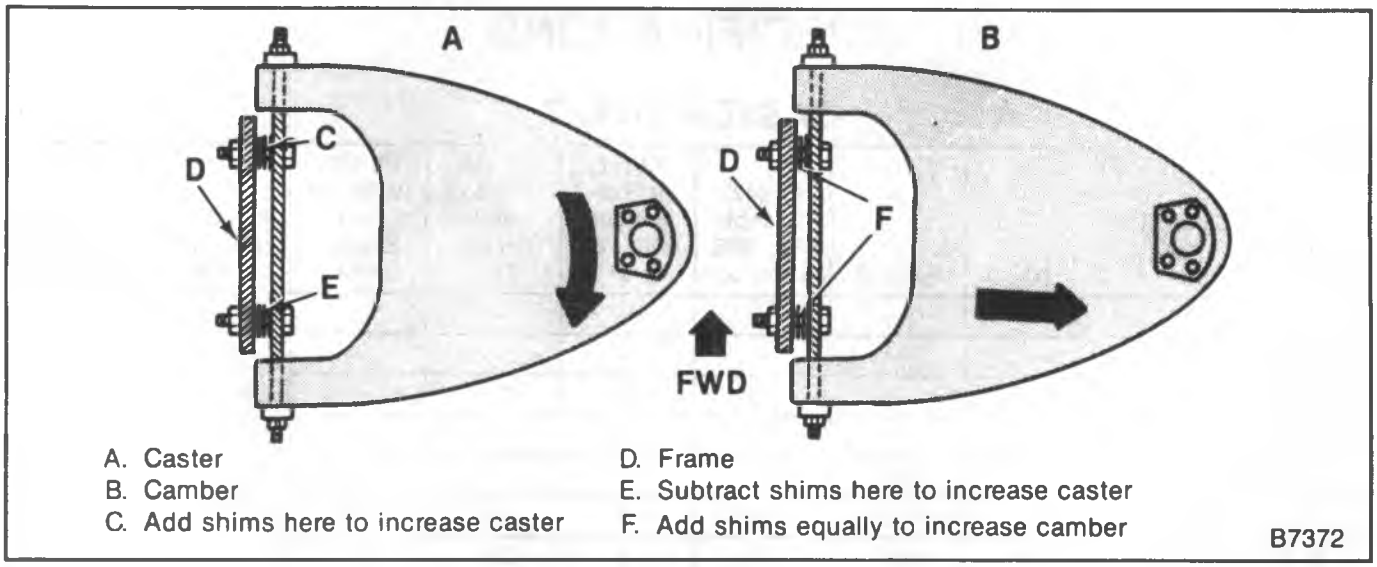

Figure 3—Caster-Camber Adjustment

6. Dimension "BC" is measured 90 degrees from the lower surface of the crossmember (C) and to the inboard rear corner of the jounce bumper bracket (B).
7. Using dimension "BC" and the caster, camber, wheel toe-in chart sheet, find the recommended caster angle.
8. If the actual (corrected) caster cycle (Step 5) is not within the recommended caster angle (Step 7), make the necessary shim changes.

CAMBER

1. Determine the camber angle from the alignment equipment.
2. Add or subtract shims from both the front and rear bolts to affect a change.

TOE-IN

1. Determine the toe-in from the alignment equipment.
2. Change the length of both tie rod sleeves to affect a toe change. Toe-in can be increased or decreased by changing the length of the tie rod ends. A threaded sleeve is provided for this purpose. When the tie rod ends are mounted ahead of the steering knuckle they must be decreased in length in order to increase toe-in. When the tie rod ends are mounted behind the steering knuckle they must be lengthened in order to increase toe-in. Refer to STEERING LINKAGE (SEC. 3B3) for clamping instructions.

SPECIFICATIONS

CASTER CHART

Dimension "BC" MM	Dimension "BC" Inches	R1	R2 + 3	P3 (42) Except FS3, R05, JB8 or JF9	P3 (42) w/R05 Except FS3, JB8 or JF9	P3 (42) w/JB8 or JF9 Except FS3	P3 (32) w/JB8 or JF9 Except FS3	P3 (32, 42) w/FS3	V1 + 2 + 3
38.1	1.50	—	—	—	—	—	—	+5° NOMINAL (References only, no means of adjustment provided.)	+8° NOMINAL (References only, no means of adjustment provided.)
44.5	1.75	—	—	—	—	—	—		
50.8	2.00	—	—	3.0°	2.5°	3.2°	—		
57.2	2.25	—	—	2.6°	2.2°	2.9°	—		
63.5	2.50	3.7°	1.5°	2.3°	1.9°	2.6°	5.5°		
70	2.75	3.5°	1.2°	2.0°	1.6°	2.4°	5.3°		
76.2	3.00	3.2°	0.9°	1.7°	1.3°	2.1°	5.0°		
82.5	3.25	2.9°	0.6°	1.4°	1.1°	1.8°	4.7°		
88.9	3.50	2.6°	0.3°	1.2°	0.8°	1.5°	4.4°		
95.3	3.75	2.4°	0.1°	0.9°	0.5°	1.2°	4.1°		
101.6	4.00	2.1°	−0.01°	0.6°	0.3°	1.0°	3.8°		
108	4.25	1.8°	−0.15°	0.4°	0.0°	0.7°	3.6°		
114.3	4.50	1.5°	−0.7°	0.2°	−0.2°	0.5°	3.3°		
120.7	4.75	1.3°	−1.0°	−0.1°	−0.4°	0.2°	3.1°		
127	5.00	1.0°	−1.6°	—	—	−0.1°	2.9°		
133.4	5.25	0.8°	−1.85°	—	—	−0.3°	2.6°		
139.7	5.50	0.5°	−1.25°	—	—	−0.5°	2.4°		
146	5.75	0.3°	−1.4°	—	—	−0.7°	2.2°		
152.4	6.00	0°	—	—	—	—	2.0°		

GMTB-3223-2A

CAMBER AND TOE-IN CHART

Model	Camber	Toe Angle	Total Toe-In*
R1	0.70°	±0.15°	2.3mm (0.09 inch)
R2 + 3	0.25°	±0.15°	
V1 + 2	+1° Nominal (Reference only; no means of adjustment provided.)	±0.15°	1.9mm (0.07 inch)
V3	0° Nominal (Reference only; no means of adjustment provided.)	±0.15°	1.9mm (0.07 inch)
P3 (42) without FS3	0.1°	0.36°	4.5mm (0.18 inch)
P3 (32) with JB8/JF9	0.1°	0.5°	6.35mm (0.25 inch)
P3 (32,42) with FS3	+1.5° Nominal (Reference only no means of adjustment provided.)	0.07°	3.0mm (0.12 inch)

*"Total Toe-In" represents the distance E minus F (figure 1) as measured from the center of the tire tread. On all models except P30/3500 with FS3, this distance is approximately 10 inches from the center of the wheel. On P30/3500 models with FS3, total toe-in is based on 19.5 inch tires.

GMTB-TB-3224-2A

SPECIFICATIONS (CONT.)

CASTER, CAMBER, WHEEL TOE-IN ALIGNMENT SETTING TOLERANCES

	Check	Re-Set
Caster	±1.00° (1)	±0.50° (2)
Camber	±0.75° (1)	±0.50° (2)

Total Toe-In	Check	Re-Set
R1, 2 (06) V1, 2 (00)	±.08 in. ±.15°	±.04 in. ±.07°
RV 3 (00)	±.20°	±.07°
P all	±.23° ±.12 in.	±.12° ±.06 in.

(1) Left And Right To Be Equal Within 1°0′

(2) Left And Right To Be Equal Within 0°30′

GMTB-3225-2A

SECTION 3B1

POWER STEERING

***NOTICE:** When fasteners are removed, always reinstall them at the same location from which they were removed. If a fastener needs to be replaced, use the correct part number fastener for that application. If the correct part number fastener is not available, a fastener of equal size and strength (or stronger) may be used. Fasteners that are not reused, and those requiring thread locking compound will be called out. The correct torque value must be used when installing fasteners that require it. If the above conditions are not followed, parts or system damage could result.*

CONTENTS

SUBJECT	PAGE
Description	3B1- 1
Integral Power Steering Gear	3B1- 1
Hydraulic Pumps	3B1- 1
Diagnosis	3B1- 5
Fluid Leak Check	3B1- 8
Power Steering System Test	3B1- 8
On-Vehicle Service	3B1-11
Maintenance	3B1-11
Pump Belt Tension Adjustment	3B1-11
Fluid Level Adjustment	3B1-12
Bleeding the Power Steering System	3B1-12
Flushing the Power Steering System	3B1-12
Steering Gear High-Point Centering	3B1-13
Power Steering Gear Replacement	3B1-13
Pitman Shaft Seal Replacement	3B1-14
Steering Gear Adjustments	3B1-17
Power Steering Pump Replacement (R and P Models)	3B1-19
Power Steering Pump Replacement (V Models)	3B1-21
Power Steering Oil Coolers	3B1-24
Power Steering Hoses	3B1-24
Specifications	3B1-30
Special Tools	3B1-31

DESCRIPTION

The hydraulic power steering system consists of a pump, an oil reservoir, a steering gear, a pressure hose, and a return hose (figure 1).

INTEGRAL POWER STEERING GEAR

The power steering gear (figure 2) has a recirculating ball system which acts as a rolling thread between the worm shaft and the rack piston. The worm shaft is supported by a thrust bearing preload and two conical thrust races at the lower end and a bearing assembly in the adjuster plug at the upper end. When the worm shaft is turned right, the rack piston moves up in the gear. Turning the worm shaft left moves the rack piston down in the gear. The rack piston teeth mesh with the sector, which is part of the pitman shaft. Turning the worm shaft turns the pitman shaft, which turns the wheels through the steering linkage.

The control valve in the steering gear directs the power steering fluid to either side of the rack piston. The rack piston converts the hydraulic pressure into a mechanical force. If the steering system becomes damaged and loses hydraulic pressure, the vehicle can be controlled manually.

HYDRAULIC PUMPS

The hydraulic pump is a vane-type pump. Depending on engine application, the fluid reservoir may be separated away from the pump (figure 3).

There are two bore openings at the rear of the pump housing. The larger opening contains the cam ring, pressure plate, thrust plate, rotor and vane assembly, and end plate. The smaller opening contains the pressure line union, flow control valve, and spring. the flow control orifice is part of the pressure line union. The pressure-relief valve inside the flow control valve limits the pump pressure (figure 4).

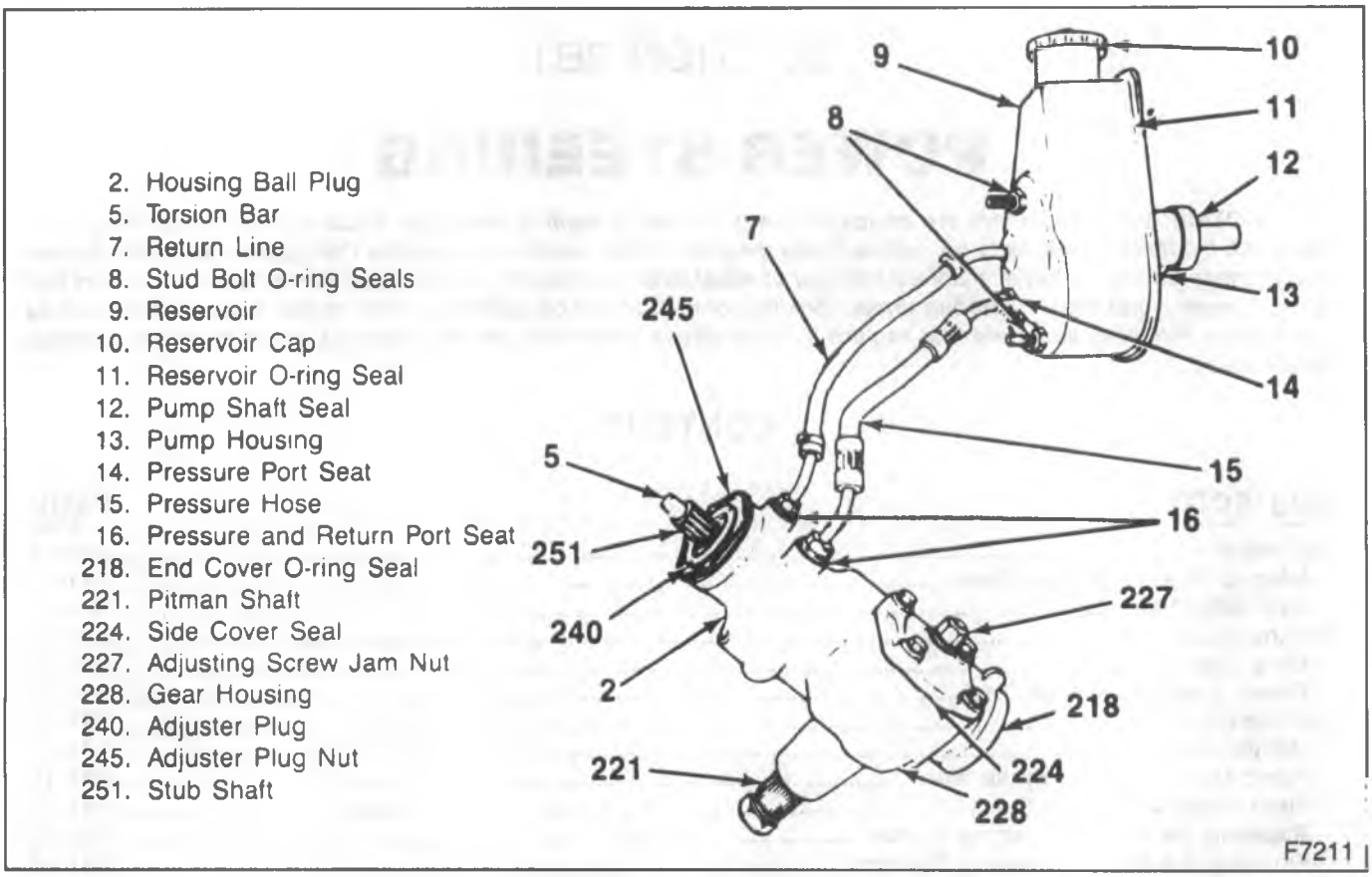

Figure 1 – Power Steering System

203. Nut
204. Spring Washer
205. Retaining Ring
207. Washer
209. Bearing
210. Screw
211. Clamp
212. Ball Guide
213. Balls
214. Rack Piston
215. Plug
216. Seal
217. Ring
218. Seal
219. Plug
220. Retaining Ring
221. Pitman Shaft
222. Adjuster Screw
224. Seal
225. Side Cover
226. Bolt
227. Nut
228. Housing
230. Seal
231. Seal
232. Rings
233. Spacer
234. Bearing Retainer
235. Spacer
236. Race
237. Bearing
238. Race
239. Seal
240. Adjuster Plug
241. Bearing
242. Seal
243. Washer
244. Retaining Ring
245. Nut
246. Races
247. Bearing
248. Worm Shaft
249. Seal
250. Valve Body
251. Stub Shaft
252. Valve Spool
253. Seal, Pitman Shaft Dust
254. Seal

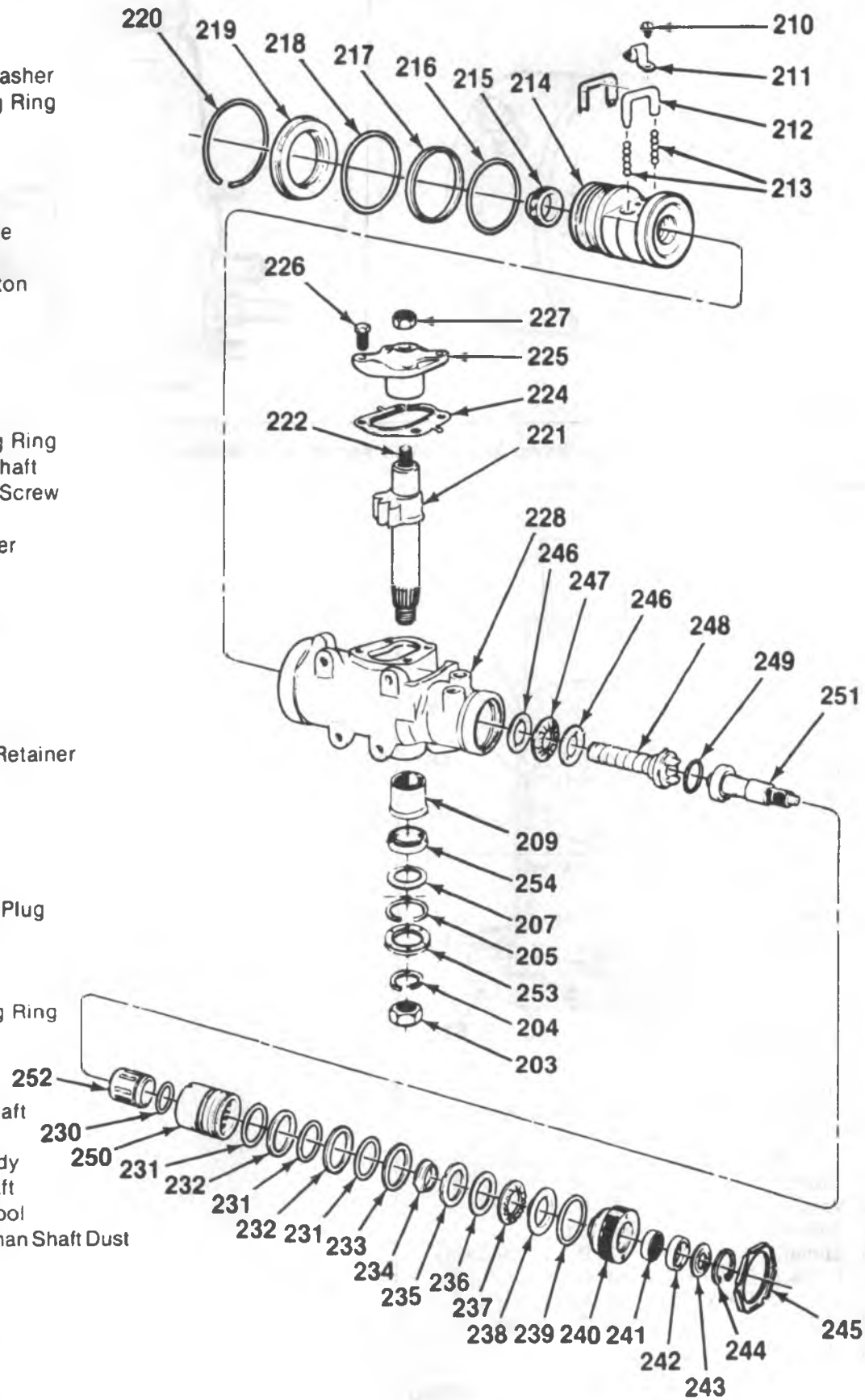

Figure 2—Power Steering Gear

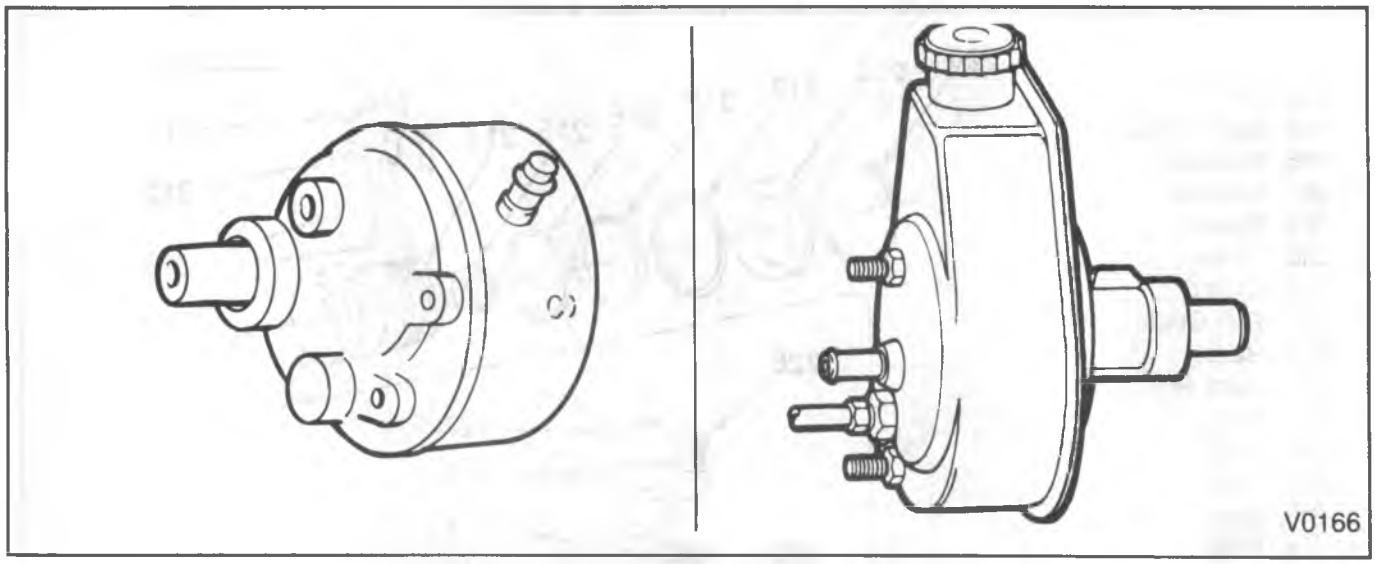

Figure 3—Pump Models With And Without Built-In Reservoir

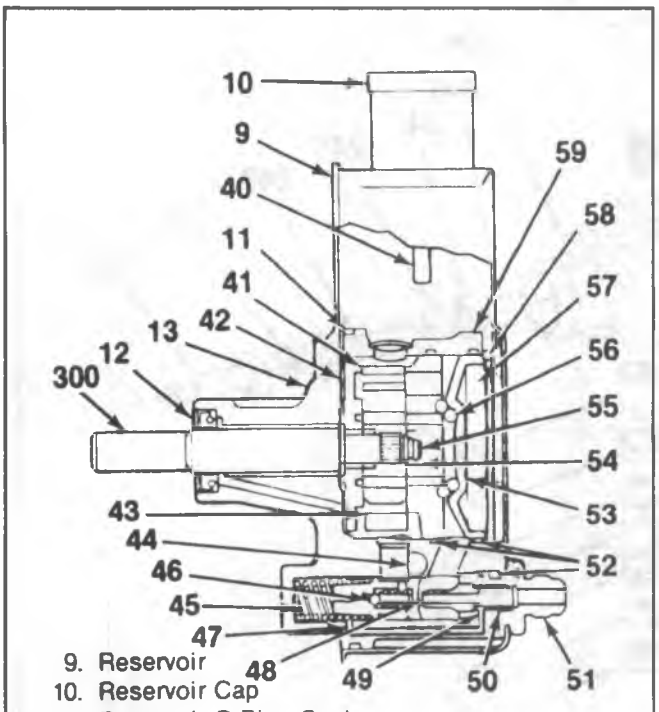

9. Reservoir
10. Reservoir Cap
11. Reservoir O-Ring Seal
12. Shaft Seal
13. Pump Housing
40. Dip Stick
41. Pump Ring
42. Thrust Plate
43. Vanes
44. Reservoir Hole
45. Spring
46. Pressure Relief Valve
47. Flow Control Valve
48. Exit Hole
49. Orifice
50. Filter
51. Pump Union
52. Seals
53. End Plate
54. Retaining Ring
55. Rotor
56. Spring
57. Discharge Cavity
58. Retaining Ring
59. Pressure Plate
300. Stub Shaft

F2580

Figure 4—Power Steering Pump

DIAGNOSIS

PROBLEM	POSSIBLE CAUSE	CORRECTION
Objectionable "Hiss"	1. Noisy relief valve in the hydraulic pump.	1. There is some noise in all power steering systems. One of the most common is a hissing sound most evident at standstill parking. Hiss is a high frequency noise. The noise is present in every valve and results from high velocity fluid passing valve orifice edges. There is no relationship between this noise and performance of the steering. "Hiss" may be expected when steering wheel is at end of travel or when slowly turning at standstill.Do not replace valve unless "hiss" is extremely objectionable. A replacement valve will also exhibit slight noise and is not always a cure for the objection.
	2. Any metal-to-metal contacts through flexible coupling.	2. Align the steering shaft and gear so the flexible coupling rotates in a flat plane and is not distorted as the shaft rotates.
Rattle Or Chuckle Noise In Steering Gear	1. Gear loose on the frame.	1. Check the gear mounting bolts. Torque the bolts to specifications.
	2. Steering linkage looseness.	2. Check linkage pivot points for wear. Replace if necessary.
	3. Pressure hose touching other parts of vehicle.	3. Adjust the hose position. Do not bend tubing by hand.
	4. Loose pitman arm.	4. Torque the pitman arm bolt.
	5. Improper over-center adjustment. A slight rattle may occur on turns because of increase clearance off the "high point." This is normal and clearance must not be reduced below specified limits to eliminate this slight rattle.	5. Adjust to specifications.
Excessive Wheel Kick-Back Or Loose Steering	1. Air in the system.	1. Add oil to the pump reservoir and bleed. Check hose connectors for proper torque.
	2. Steering gear mounting loose.	2. Tighten attaching bolts to specified torque.
	3. Steering linkage joints worn.	3. Replace loose parts.
	4. Front wheel bearings incorrectly adjusted or worn.	4. Adjust the bearings or replace with new parts as necessary.
	5. Steering gear improperly adjusted.	5. Adjust to specifications.
	6. Worn or missing poppet valve (steering gear).	6. Replace the poppet valve.
	7. Steering gear flexible coupling too loose on the shaft or the rubber disc mounting screws loose.	7. Tighten to specifications.
	8. Damaged or worn steering gear.	8. Disassemble and repair the steering gear as outlined in the unit repair manual.

GMTB-4009-A

DIAGNOSIS (CONT.)

PROBLEM	POSSIBLE CAUSE	CORRECTION
Vehicle Leads To One Side Or The Other (Keep In Mind The Road And Wind Conditions). Test The Vehicle, Going In Both Directions, On A Flat Road.	1. Front end misaligned. 2. Unbalanced steering gear valve. If this is cause, steering effort will be very light in direction of lead and heavy in opposite direction. 3. Steering shaft rubbing the ID of the shaft tube. 4. Steering linkage not level.	1. Adjust to specifications. 2. Replace the gear valve. 3. Align the column. 4. Adjust as required.
Momentary Increase In Effort When Turning The Wheel Quickly To The Right Or Left	1. Low oil level in the pump. 2. Pump belt slipping (if used). 3. High internal linkage (steering gear or pump).	1. Add power steering fluid as required. 2. Tighten or replace belt. 3. Refer to "Power Steering System Test" in this section.
Poor Return Of Steering	1. Tires under-inflated. 2. Lower coupling flange rubbing against the steering gear adjuster plug. 3. Steering wheel rubbing against directional signal housing. 4. Tight or frozen steering shaft bearings. 5. Steering linkage or ball joints binding. 6. Steering gear to column misalignment. 7. Tie rod pivots not centralized. 8. Lack of lubricant in the suspension ball joints and the steering linkage. 9. Sticky or plugged valve spool. 10. Rubber spacer binding in the shift tube. 11. Improper front end alignment. 12. Tight steering shaft bearings. 13. Steering gear adjusted too tightly. 14. Kink in return hose.	1. Inflate to specified pressure. 2. Loosen the pinch bolt and assemble properly. 3. Adjust the steering jacket. 4. Replace the bearings. 5. Replace the affected parts. 6. Align the steering column. 7. Adjust tie rod ends as required to center pivots. 8. Lubricate. Refer to MAINTENANCE AND LUBRICATION (SEC. 0B). 9. Remove and clean or replace the valve. 10. Make certain the spacer is properly seated. Lubricate inside the diameter with silicone lubricant. 11. Check and adjust to specifications. 12. Replace the bearings. 13. Adjust over-center and thrust bearing preload to specifications. 14. Replace the hose.
Steering Wheel Surges Or Jerks When Turning With Engine Running Especially During Parking	1. Low oil level in pump. 2. Loose pump belt. 3. Sticky flow control valve. 4. Insufficient pump pressure. 5. Faulty gear relief valve.	1. Add power steering fluid as required. 2. Adjust tension to specification. 3. Replace or clean the control valve. 4. Refer to "Power Steering System Test" in this section. 5. Replace the gear relief valve.
Hard Steering Effort In Both Directions	1. Low tire pressure. 2. Lack of lubricant in suspension or ball joints. 3. Steering gear to column misalignment. 4. Loose pump belt. 5. Low fluid level in reservoir. 6. High internal leakage (steering gear or pump). 7. Sticky flow control valve. 8. Lower coupling flange rubbing against steering gear adjuster plug. 9. Steering gear adjusted too tight. 10. Improper front end alignment.	1. Adjust the tire pressure. 2. Lubricate and relubricate at proper intervals. Refer to MAINTENANCE AND LUBRICATION (SEC. 0B). 3. Align the steering column. 4. Adjust belt tension to specifications. 5. Fill to proper level. Inspect lines and joints for external leakage. 6. Refer to "Power Steering System Test" in this section. 7. Replace or clean the valve. 8. Loosen the pinch bolt and assemble properly. 9. Adjust over-center and thrust bearing preload to specifications. 10. Check and adjust to specifications.

GMTB-4010-A

DIAGNOSIS (CONT.)

PROBLEM	POSSIBLE CAUSE	CORRECTION
Foaming Milky Power Steering Fluid, Low Level And Possible Low Pressure	Air in the fluid, and loss of fluid due to internal pump leakage causing overflow.	Check for leak and correct. Bleed system. Extremely cold temperatures will cause system aeriation should the oil level be low. If oil level is correct and pump still foams, remove pump from vehicle and separate reservoir from housing. Check welsh plug and housing for cracks. If plug is loose or housing is cracked, replace housing.
Low Oil Pressure Due To Restriction In The Hose	1. Check for kinks in the hose. 2. Foreign object stuck in the hose.	1. Remove the kinks or replace the hose. 2. Remove the foreign object or replace the hose.
Low Oil Pressure Due To Steering Gear. Refer To "Power Steering System Test" In This Section.	1. Pressure loss in cylinder due to worn piston ring or scored housing bore. 2. Leakage at the valve rings and valve body to the worm seal. 3. Leakage at the valve body or a loose fitting spool. 4. Damaged poppet valve.	1. Disassemble the steering gear as outlined in the unit repair manual. Inspect the ring and housing bore. Replace the affected parts. 2. Disassemble steering gear and replace seals. 3. Replace the valve. 4. Replace the poppet valve.
Low Oil Pressure Due To Steering Pump. Refer To "Power Steering System Test" In This Section.	1. Flow control valve stuck or inoperative. 2. Pressure plate not flat against the cam ring. 3. Extreme wear of cam ring. 4. Scored pressure plate, thrust plate or rotor. 5. Vanes sticking in rotor slots. 6. Vanes not installed properly. 7. Air in oil. 8. Low oil level. 9. Loose belt. 10. Damaged hoses or steering gear.	1. Replace or clean the valve. 2. Replace the pressure plate. 3. Replace and flush the system. 4. Replace parts. (If rotor, replace with rotating group), flush the system. 5. Free-up by removing burrs, varnish or dirt. 6. Install properly. Radius edge to the outside. 7. Locate source of leak and correct. Bleed the system. 8. Add power steering fluid as required. 9. Adjust tension to specifications. 10. Replace as necessary.
Chirp Noise In Steering Pump	1. Loose belt.	1. Adjust belt tension.
Belt Squeal (Particularly Noticeable At Full Wheel Travel And Standstill Parking)	1. Loose belt.	1. Adjust belt tension.
Growl Noise In Steering Pump	1. Excessive back pressure in hoses or steering gear caused by restriction.	1. Locate restriction and correct. Replace part if necessary.
Growl Noise In Steering Pump (Particularly Noticeable At Standstill Parking)	1. Scored pressure plates, thrust plate or rotor. 2. Extreme wear of cam ring.	1. Replace parts and flush system. 2. Replace parts.
Groan Noise In Steering Pump	1. Low oil level. 2. Air in the oil. Poor pressure hose connection.	1. Add power steering fluid as required. 2. Torque the connector. Bleed the system.

GMTB-4011-A

DIAGNOSIS (CONT.)

PROBLEM	POSSIBLE CAUSE	CORRECTION
Rattle Or Knock Noise In Steering Pump	1. Loose pump pulley nut. 2. Pump vanes sticking in rotor slots. 3. Pressure hose touching other parts of vehicle.	1. Torque nut. 2. Free up by removing burrs, varnish or dirt. 3. Adjust hose position.
Swish Noise In Steering Pump	1. Faulty flow control valve.	1. Replace part.
Whine Noise In Steering Pump	1. Pump shaft bearing scored.	1. Replace the housing and shaft. Flush the system.

D0026

FLUID LEAK CHECK

1. With the engine off, wipe the complete power steering system dry (gear, pump, hoses and connections).
2. Check the fluid level in the pump reservoir and adjust as directed in "Fluid Level Adjustment" in this section.
3. Start the engine and turn the steering wheel from stop to stop several times. Do not hold the wheel against the stops as this may damage the pump.
4. Find the exact areas of leakage and use the recommended method of repair as shown in figure 5.

POWER STEERING SYSTEM TEST

The power steering system may be tested using either J 5176-D Power Steering Gage or with J 25323-A Power Steering Analyzer. J 25323-A will measure the flow rate in addition to the pressure (figure 6).

The power steering system test is used to identify and isolate hydraulic circuit difficulties. Prior to performing this test, the following inspection and corrections (if necessary) must be made.

Inspect

- Pump reservoir for proper fluid level.
- Pump belt for proper tension.
- Tires for correct air pressure.
- Power steering system, replacing parts as necessary.

Important

- All tests are made with the engine idling at normal operating temperature. Check the idle speed adjustment and, if necessary, adjust to the correct specification. Refer to the Fuel, Driveability and Emissions Service Manual.

TEST WITH J 5176-D

1. Place a container under the steering gear or pump to catch the fluid when disconnecting or connecting the hoses.
2. With the engine OFF, disconnect the pressure hose at the steering gear or power steering pump and install J 5176-D to both hoses using adapter fitting J 5176-20. The gage must be between the shutoff valve and pump. Open the shutoff valve.
3. Remove the filler cap from the pump reservoir and check the fluid level. Fill the pump reservoir with power steering fluid to the full mark on the dipstick. Start the engine and, momentarily holding the steering wheel against the stop, check the connections at J 5176-D for leakage.

Important

- Do not hold the wheel against the stop for more than 5 seconds as the pump can be damaged internally.

4. Bleed the system. Refer to "Bleeding the Power Steering System" in this section.
5. Insert thermometer J 5421-02 in the reservoir filler opening. Move the steering wheel from stop to stop several times until the thermometer indicates that the hydraulic fluid in the reservoir has reached a temperature of 65 to 77°C (150 to 170°F).

Important

- To prevent scrubbing flat spots on the tires, do not turn the steering wheel more than five times without rolling the vehicle to change the tire-to-floor contact area.

6. Check the pump fluid level. Add power steering fluid if required. When the engine is at normal operating temperature, the initial pressure on the gage (valve open) should be in the 550-860 kPa (80-125 psi) range. If the pressure is in excess of 1380 kPa (200 psi), check the hoses for restrictions and the poppet valve for proper assembly.

NOTICE: Do not leave valve fully closed for more than 5 seconds as the pump could be damaged internally.

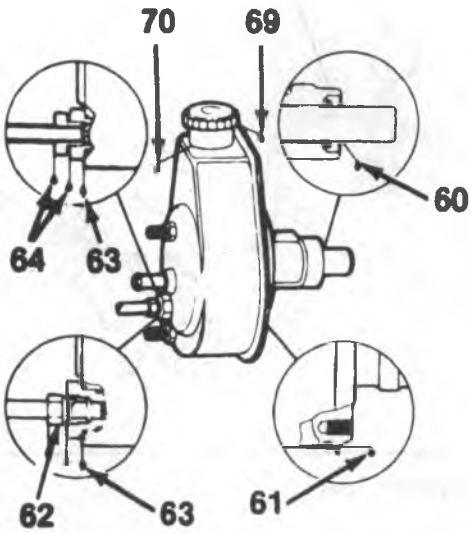

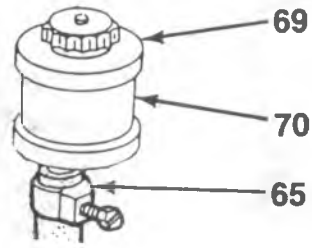

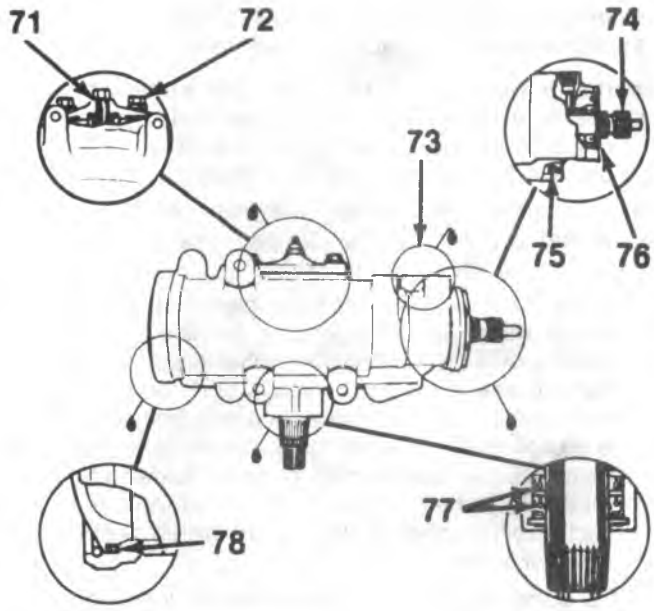

60. Replace the drive shaft seal. Make certain that the drive shaft is clean and free of pitting in the seal area.
61. Replace the reservoir O-ring seal.
62. Torque hose fitting nut to 35 N·m (25 ft. lbs.). If leakage persists, replace the O-ring seal.
63. Torque fitting to 75 N·m (55 ft. lbs.). If leakage persists, replace the O-ring seal.
64. Torque hose fitting nut to 48 N·m (35 ft. lbs.). If leakage persists, replace the brass connector and reface the tube flare. If nut threads are damaged, replace the nut.
65. Tighten or replace clamp.
69. Check the oil level; if leakage persists with the level correct and cap tight, replace the cap.
70. If a cracked or bent reservoir is detected, replace the reservoir.
71. Torque jam nut to 48 N·m (35 ft. lbs.). Replace the nut if leakage persists.
72. Torque side cover bolts to 60 N·m (45 ft. lbs.). Replace the side cover seal if leakage persists.
73. Torque hose fitting nut to 27 N·m (20 ft. lbs.). If leakage persists, replace the O-ring seal.
74. Check for seepage between the torsion bar and stub shaft. Replace the rotary valve assembly.
75. Seat the ball in the housing with a blunt punch. Apply Loctite 75559 solvent and Loctite 290 adhesive, or equivalent, to the ball area.
76. Replace the adjuster plug seals.
77. Replace both pitman shaft seals.
78. Replace end plug O-ring seal.

V0167

Figure 5—System Leak Diagnosis

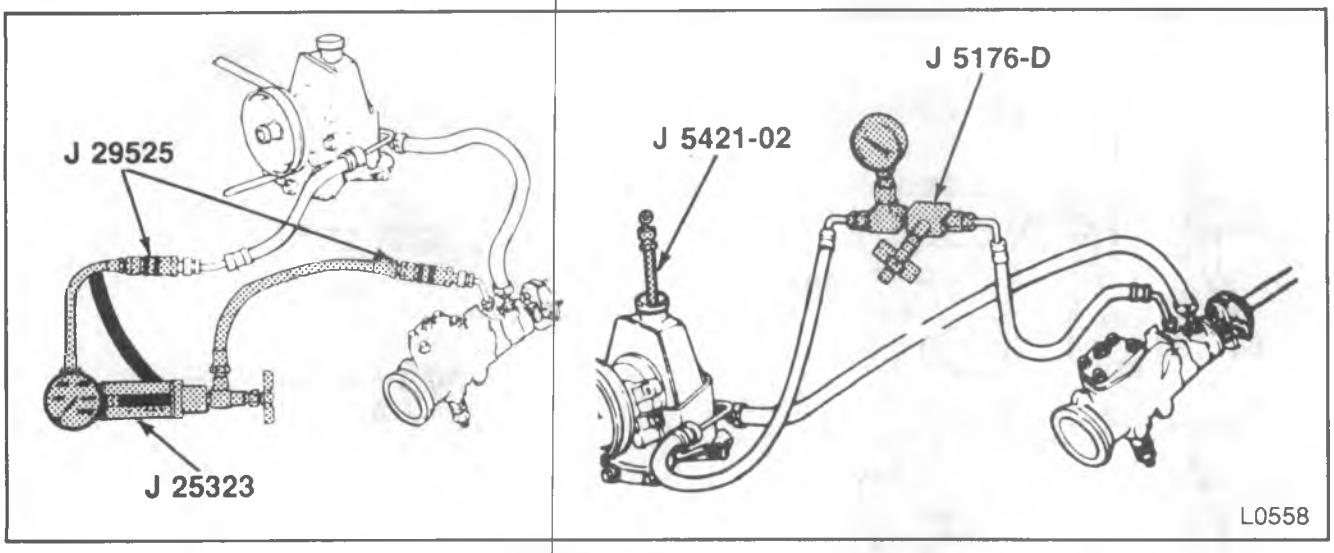

Figure 6—Tools for Power Steering System Test

7. Open and close the gage valve fully 3 times. Record the highest pressures attained each time.
   - If the pressures recorded are within the specifications at the end of this section, and the range of readings is within 345 kPa (50 psi), the pump is functioning within specifications.
   - If the pressures recorded are high, but do not repeat within 345 kPa (50 psi), the pump is functioning within specifications.
   - If the pressures recorded are high, but do not repeat within 345 kPa (50 psi), the flow control valve is sticking. Remove the valve, clean it, and remove any burrs using crocus cloth or a fine hone. If the system contains some dirt, flush it. If it is exceptionally dirty, both the pump and gear must be completely diassembled, cleaned, flushed and reassembled before further use. In addition, the fluid reservoir must be flushed completely before any further use.
8. If the pump checks within specifications, leave the valve open and turn the steering wheel to both stops. Record the highest pressures and compare with the maximum pump pressure recorded. If this pressure cannot be built in either (or one) side of the gear, the gear is leaking internally and must be disassembled and repaired.
9. Turn the engine off, remove the testing gage, reconnect the pressure hose, check the fluid level and/or make the needed repairs.
10. If the problem still exists, the steering and front suspension must be thoroughly examined. Refer to "Diagnosis" in this section.

TEST WITH J 25323-A

1. Place a container under the steering gear or pump to catch the fluid when disconnecting or connecting the hoses.
2. With the engine OFF, disconnect the pressure hose at the steering gear or power steering pump. Thread female adapter into the pressure hose and the male adapter into the gear or pump (adapters: J 29525). Connect J 25323-A analyzer hoses to the adapters.
3. If J 25323-A has never been used it will be necessary to bleed the power steering system to remove all the air. Refer to "Bleeding the Power Steering System" in this section. The analyzer gate must be open during this procedure.
4. Add power steering fluid to the pump or reservoir if required.
5. Run the engine at idle speed **with the gate valve open** and record flow (A) and pressure (B).
   - If the flow is below 7.4 L/min. (2 gpm) the pump may need repair, but continue the test.
   - If the pressure is above 1035 kPa (150 psi), check the hoses for restriction and check the steering gear.
6. Partially close the gate valve to build 4278 kPa (620 psi). Record the flow (C).
   - If the flow (C) drops more than 3.7 L/min. (1 gpm) under flow (A), disassemble the pump and replace the ring, rotor and vanes. If the pressure plates are worn or cracked, replace them. Replace all O-ring seals when reassembling the pump. Continue the test.
7. Completely close and partially open the gate valve three times (**do not allow the valve to remain closed for more than 5 seconds**). Record the "gate closed" pressure (D).
8. Check the pressure specifications at the end of this section. If the pump pressure recorded is 690 kPa (100 psi) lower than the minimum specification listed, replace the flow control valve in the pump. If the pressure recorded is above the maximum specification listed, the flow control valve in the pump should be removed and cleaned or replaced. If the system is exceptionally dirty, both the steering gear and pump must be completely disassembled and cleaned before further use. In addition, the fluid reservoir must be flushed completely before any further use.

9. Increase the engine speed from idle to about 1500 RPM. Record the flow (E).
   - If flow (E) varies more than 3.7 L/min. (1 gpm) from flow (A), the flow control valve should be removed and cleaned or replaced.
10. Turn the steering wheel lightly against both stops. Record the pressure and flow (F).
   - Pressures developed at both stops should be nearly the same as the maximum pump output (D). At the same time, the flow should drop below 1.85 L/min. (0.5 gpm).
   - If the pressure does not reach maximum output or the flow does not drop below the specified value, excessive internal leakage is occurring. Remove and disassemble the steering gear and remove the control valve. Repair the steering gear as outlined in the Unit Repair Manual.
11. Turn the steering wheel in both directions and release quickly while watching the pressure gage. The needle should move from the normal pressure reading and snap back as the wheel is released. If it comes back slowly or sticks, the rotary valve in the steering gear is sticking. Remove, disassemble, and clean the rotary valve. If the system contains a lot of dirt and foreign material, disassemble the pump and gear and clean both. In addition, the fluid reservoir must be flushed completely before any further use.
12. If the problem still exists, the steering and front suspension must be thoroughly examined. Refer to "Diagnosis" in this section.

ON-VEHICLE SERVICE

MAINTENANCE

The hydraulic system should be kept clean. At regular intervals the fluid level in the reservoir should be checked and fluid added when required. Refer to MAINTENANCE AND LUBRICATION (SEC. 0B) of this manual for type of fluid to be used and intervals for filling.

If the system contains some dirt, flush it as detailed later in this section. If it is exceptionally dirty, both the pump and the gear must be completely disassembled before further use. In addition, the fluid reservoir must be flushed completely before any further use.

All tubes, hoses and fittings should be inspected for leakage at regular intervals. Fittings must be tight. Make sure the clips, clamps, and supporting tubes and hoses are in place and properly secured.

Inspect the hoses with the wheels in the straight-ahead position, then turn the wheels fully to the left and right, while observing the movement of the hoses. Correct any hose contact with other parts of the vehicle that could cause chafing or wear.

- Power steering hoses and lines must be twisted, kinked or tightly bent. The hoses should have sufficient natural curvature in the routing to absorb movement and hose shortening during vehicle operation.
- Air in the system will cause spongy action and noisy operation. When a hose is disconnected or when fluid is lost for any reason, the system must be bled after refilling. Refer to "Bleeding the Power Steering System" in this section.

PUMP BELT TENSION ADJUSTMENT

Some vehicles are a single-belt serpentine accessory drive system. This system is self-tensioning and requires no adjustment. The adjustment procedures given refer to a 'standard' V-belt system.

When adjusting a power steering pump belt, never pry against the pump reservoir or pull against the filler neck. Two systems are used for belt adjustment. On some models, the pump is loosened from the bracket and moved outward to increase the tension. On other models, a half-inch square drive hole is located in the bracket. This hole is used to rotate the pump and bracket assembly outward to increase belt tension.

Adjust

Tool Required:

J 23600-B Belt Tension Gage.

1. Place belt tension gage J 23600-B or equivalent midway between the pulleys on the drive belts being checked (figure 7).

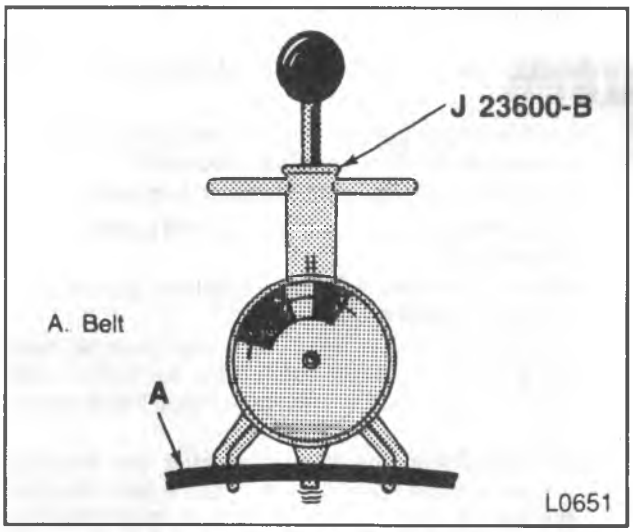

Figure 7—Checking Drive Belt Tension

2. Loosen the pivot and pump brace adjusting nuts.

NOTICE: Do not move the pump by prying against the reservoir or by pulling on the filler neck, or damage may occur.

3. Move the pump, with the belt in place, until the belt is tensioned to specifications. Refer to ENGINE COOLING (SEC. 6B1).
4. Tighten the pump bracket adjusting nut and the pivot bolt nut. Refer to "Power Steering Pump Replacement" in this section.
5. Inspect the belt tension and remove the belt tension gage.

- Power steering pump driven by a single belt.
  1. Loosen the pump attaching bolts and adjust the belt to correct tension by moving the pump outward, away from the engine.
  2. Tighten finger-tight all pump mounting bolts and remove the pry bar.
  3. Tighten all pump mounting bolts. Refer to "Power Steering Pump Replacement" in this section.
  4. Inspect belt tension and remove the belt tension gage.

FLUID LEVEL ADJUSTMENT

RV & P-MODELS (WITHOUT AUTOMATIC APPLY PARKING BRAKE)

1. Run the engine until the power steering fluid reaches normal operating temperature, about 80°C (170°F), then shut the engine off.
2. Remove the reservoir cap and check the fluid level on the dipstick.
3. If the fluid level is low, add the power steering fluid specified in MAINTENANCE AND LUBRICATION (SEC. 0B) to the proper level and install the reservoir cap.
4. When checking the fluid level after the steering system has been serviced, air must be bled from the system. Refer to "Bleeding the Power Steering System" in this section.

P-MODELS (WITH AUTOMATIC APPLY PARKING BRAKE)

1. Run the engine until the power steering flush reaches normal operating temperature, about 80°C (170° F).
   - Do not turn engine off to check fluid level.
2. Place transmission in neutral, apply the parking brake manual lever.
3. Remove cap from reservoir. Fluid level should be 2 inches from bottom of reservoir.
4. If fluid level is low, add the power steering fluid specified in MAINTENANCE AND LUBRICATION (SEC 0B) to the proper level and install the reservoir cap.
5. When checking the fluid level after the steering system has been serviced, ar must be bled from the system. Refer to "Bleeding the Power Steering System" in this section.

BLEEDING THE POWER STEERING SYSTEM

When a power steering pump or gear has been removed or an oil line has been disconnected, the air that has entered the system must be bled out before the vehicle is operated. If air is allowed to remain in the power steering fluid system noisy and unsatisfactory operation of the system may result. Bleed air from the hydraulic system as follows:

- When bleeding the system, and any time fluid is added to the power steering system, be sure to use only power steering fluid as specified in MAINTENANCE AND LUBRICATION (SEC. 0B).

1. Fill the pump fluid reservoir to the proper level and let the fluid settle for at least two minutes.
2. Start the engine and let it run for a few seconds, then turn the engine off.
3. Add fluid if necessary.
4. Repeat the above procedure until the fluid level remains constant after running the engine.
5. Raise the front of the vehicle so the wheels are off the ground.
6. Start the engine. Slowly turn the steering wheel right and left, lightly contacting the wheel stops.
7. Check the fluid level and add fluid if necessary.
8. Lower the vehicle and turn the steering wheel slowly from lock to lock.
9. Stop the engine. Check the fluid level and refill as required.
10. If the fluid is extremely foamy, allow the vehicle to stand a few minutes and repeat the above procedure.

Inspect

- Belt for proper tension.
- Pulley for looseness or damage. The pulley should not wobble with the engine running.
- Hoses so they are not touching any other parts of the vehicle and are properly secured.
- Fluid level and fill to the proper level.
- Fluid for air. If present, bleed the system as described above.

FLUSHING THE POWER STEERING SYSTEM

1. Raise the front of the vehicle off the ground until the wheels are free to turn.
2. Remove the fluid return line at the pump inlet connector.
3. Plug the connector port on the pump.
4. Position the line toward a large container to catch the draining fluid.
5. While an assistant is filling the reservoir with new power steering fluid, run the engine at idle.
6. Turn the steering wheel close to each stop. DO NOT contact wheel stops or hold the wheel near a stop position or fluid will stop and the pump will be in pressure relief mode. A sudden overflow from the reservoir may develop if the wheel is held at a stop.
7. Install all the lines, hoses and components (if removed) on the vehicle.

8. Fill the system with new power steering fluid and bleed the system as described in "Bleeding The Power Steering System" in this section.
9. Operate the engine for about 15 minutes.
10. Remove the pump return line at the pump inlet and plug the connection on the pump.
11. While refilling the reservoir, check the draining fluid for contamination. If foreign material is still evident, replace all lines and disassemble and clean or replace the power steering system components. Do not re-use any drained power steering fluid.

STEERING GEAR HIGH-POINT CENTERING

1. Set the front wheels in the straight ahead position. This can be checked by driving the vehicle a short distance on a flat surface.
2. With the front wheels set straight ahead, check the position of the mark on the worm shaft designating steering gear high point. This mark should be at the top side of the shaft at the 12 O'clock position and lined up with the mark in the coupling lower clamp.
3. On R and P-Models except P30 and RPO FS3 I-beam front axle, if the steering gear has been moved off high point when setting the wheel in the straight ahead position, loosen the adjuster tube clamps on both the left and right hand tie rods. Turn both adjuster tubes an equal number of turns in the same direction to bring the gear back on high point.

Important

- Turning the adjuster tubes an unequal number of turns or in different directions will disturb the toe setting of the wheels.

4. On V and P3 models with RPO FS-3 I-beam front axle, if the gear has been moved off high point when setting the wheels in the straight ahead position, loosen the adjuster tube clamps on the connecting rod. Turn the adjuster tube to bring the gear back on high point.
5. Check and adjust toe. Refer to FRONT END ALIGNMENT (SEC. 3A).
6. Refer to STEERING LINKAGE (SEC. 3B1) for adjuster tube clamping instructions.

POWER STEERING GEAR REPLACEMENT

Remove or Disconnect (Figures 8 through 12)

- Place a drain pan below the steering gear.

1. Negative battery cable.
2. Hoses from the steering gear. Raise the hose up to prevent oil drainage. Cap or tape the ends of the hose and gear fittings to prevent the entrance of dirt.

- Remove the flexible coupling to steering shaft flange bolts (P30 Motorhome models).
- Remove the lower cardon type joint pinch bolt. Mark the relationship of the universal yoke to the stub shaft (P-Commercial Models).

3. Pitman arm. Refer to STEERING LINKAGE (SEC. 3B1).
4. Steering gear frame bolts and the steering gear.

- Using a soft mallet, tap lightly on the flexible coupling to remove the coupling from the steering gear stub shaft (R, V and P3 Motorhome models).

R, V and P30 Motorhome Models

Install or Connect (Figures 8 through 12)

NOTICE: For steps 2, 3, and 4 see "Notice" on page 3B1-1.

1. Flexible coupling onto the steering gear stub shaft.
   - Align the flat in the coupling with the flat on the shaft.
   - Push the coupling onto the stub shaft until the coupling reinforcement bottoms against the end of the shaft.

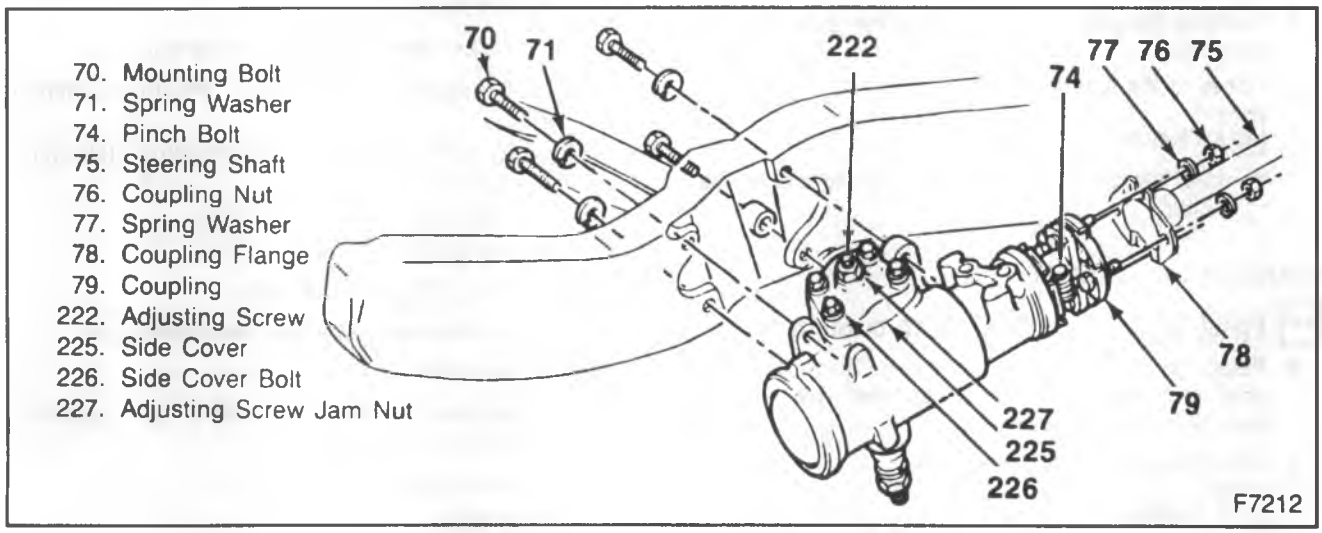

Figure 8—Steering Gear Installation—R Model

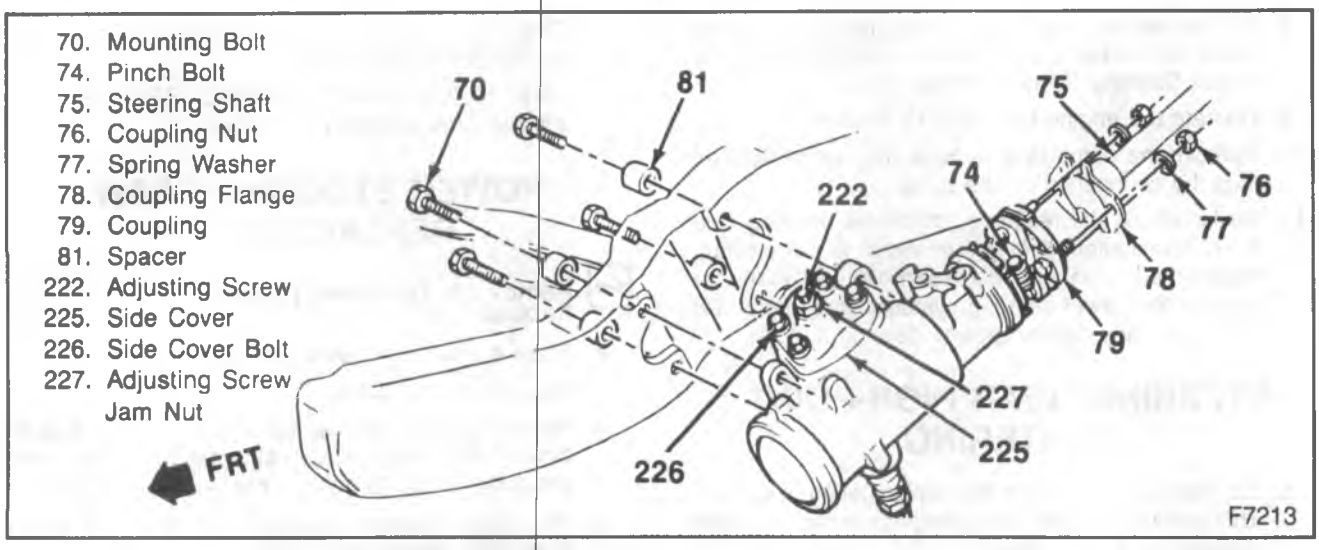

Figure 9—Steering Gear Installation—V Model

2. Pinch bolt (74) into the split clamp. The pinch bolt must pass through the shaft undercut.

Tighten

- Pinch bolt (74) to 102 N•m (75 ft. lbs.).

- Place the steering gear into position, guiding the coupling bolts into the proper holes in the shaft flange.

3. Steering gear to frame bolts (70).

Tighten

- Bolts (70) to 90 N•m (66 ft. lbs.).

4. Coupling flange nuts and washers. The coupling alignment pins should be centered in the flange slots.

Tighten

- Coupling flange nuts to 27 N•m (20 ft. lbs.). Maintain a coupling to flange dimension of 6.4 to 9.5 mm (0.250 to 0.375-inch).

5. Pitman arm. Refer to STEERING LINKAGE (SEC 3B3).

- Remove the plugs and caps from the steering gear and hoses.

6. Hoses to the steering gear.

Tighten

- Hose fittings to "Specifications" at the end of this section.

P-COMMERCIAL MODELS

Install or Connect (Figures 10 through 12)

- Place the steering gear in position. Guide the stub shaft into the cardon type joint assembly by lining up the marks made at removal.

1. Steering gear to the frame bolts.

Tighten

- Bolts to 90 N•m (66 ft. lbs.).

2. Intermediate shaft pinch bolt.

Tighten

- Pinch bolt to 102 N•m (75 ft. lbs.). The pinch bolt must pass through the shaft undercut.

3. Pitman arm. Refer to STEERING LINKAGE (SEC. 3B3).

- Remove the plugs and caps from the steering gear and hoses.

4. Hoses to the steering gear.

Tighten

- Hose fittings to "Specifications" at the end of this section.

PITMAN SHAFT SEAL REPLACEMENT

Remove or Disconnect (Figure 13)

Tool Required:

J 4245 Internal Snap Ring Pliers

- Mark the position of the pitman arm to the pitman shaft.

1. Pitman arm. Refer to STEERING LINKAGE (SEC. 3B3).
2. Dust boot (260).
3. Dust seal (253).
4. Snap Ring (205) using J 4245.

- Position the drain pan under the steering gear.
- Start the engine.
- Turn the steering wheel from stop to stop, bouncing the wheel off the stops.
- Stop the engine.

5. Washer (207).
6. Seal (254).

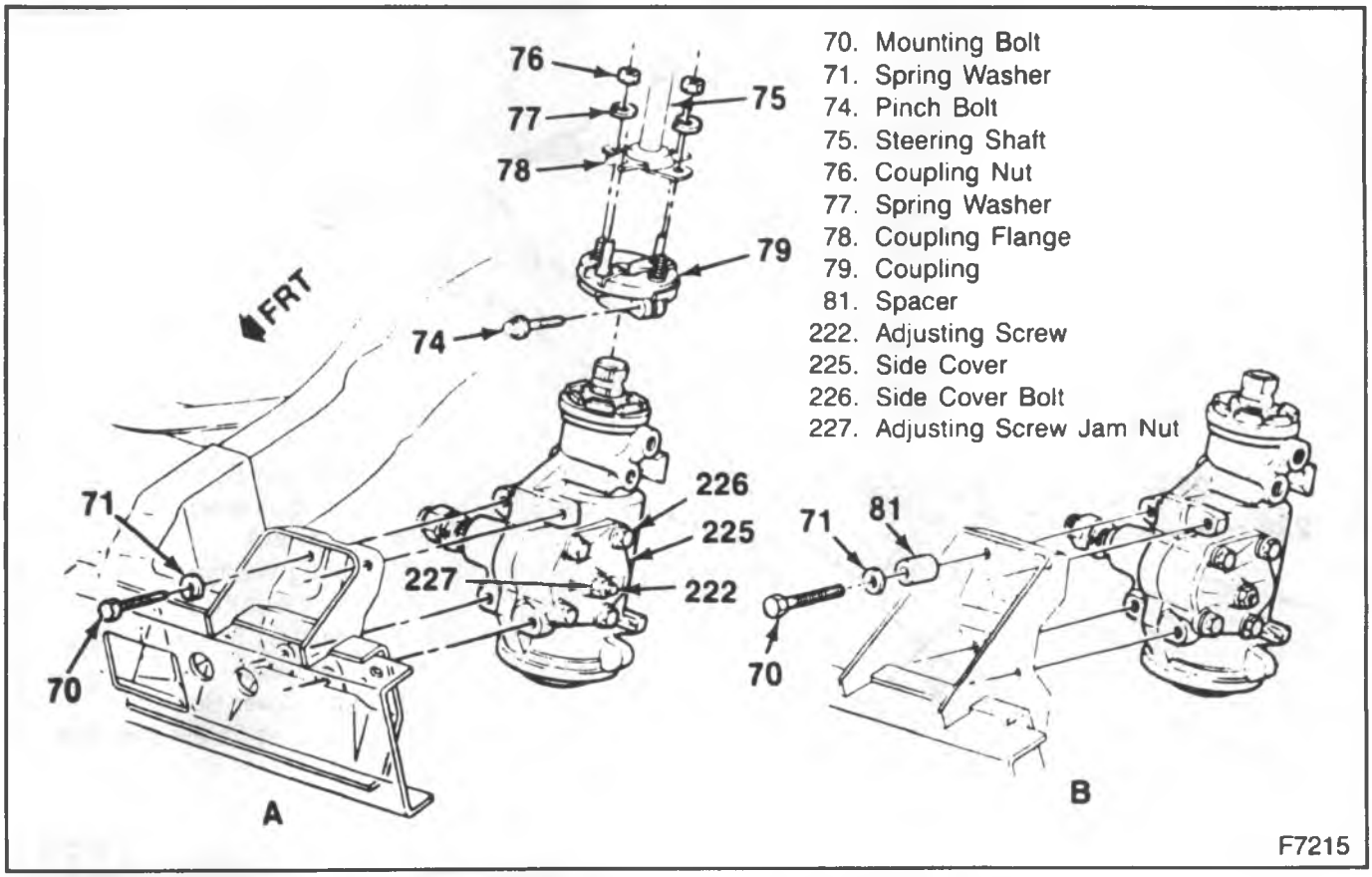

Figure 10—Steering Gear Installation—P3 Motorhome Model

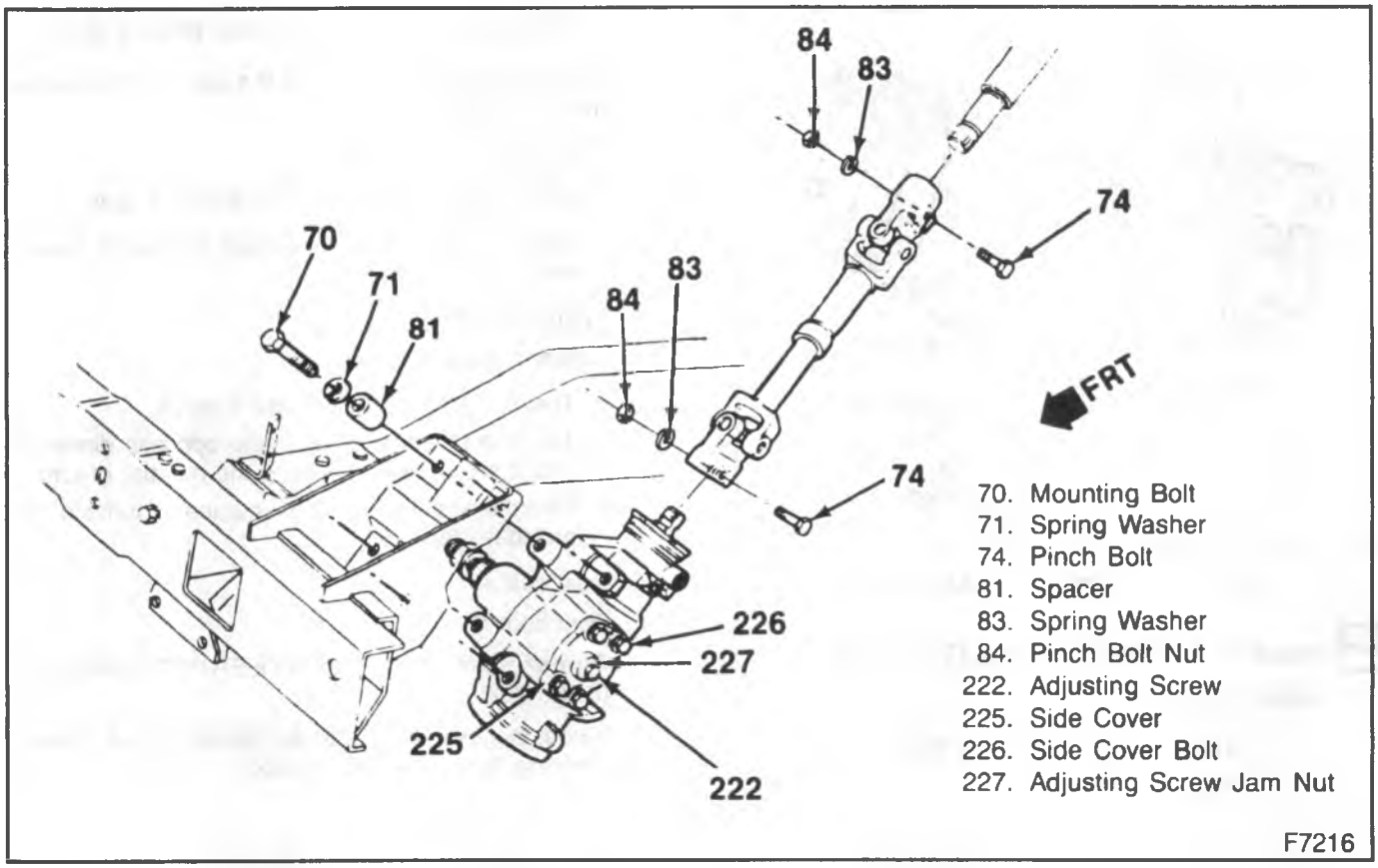

Figure 11—Steering Gear Installation—P3 with RPO FS3 I-Beam Front Axle

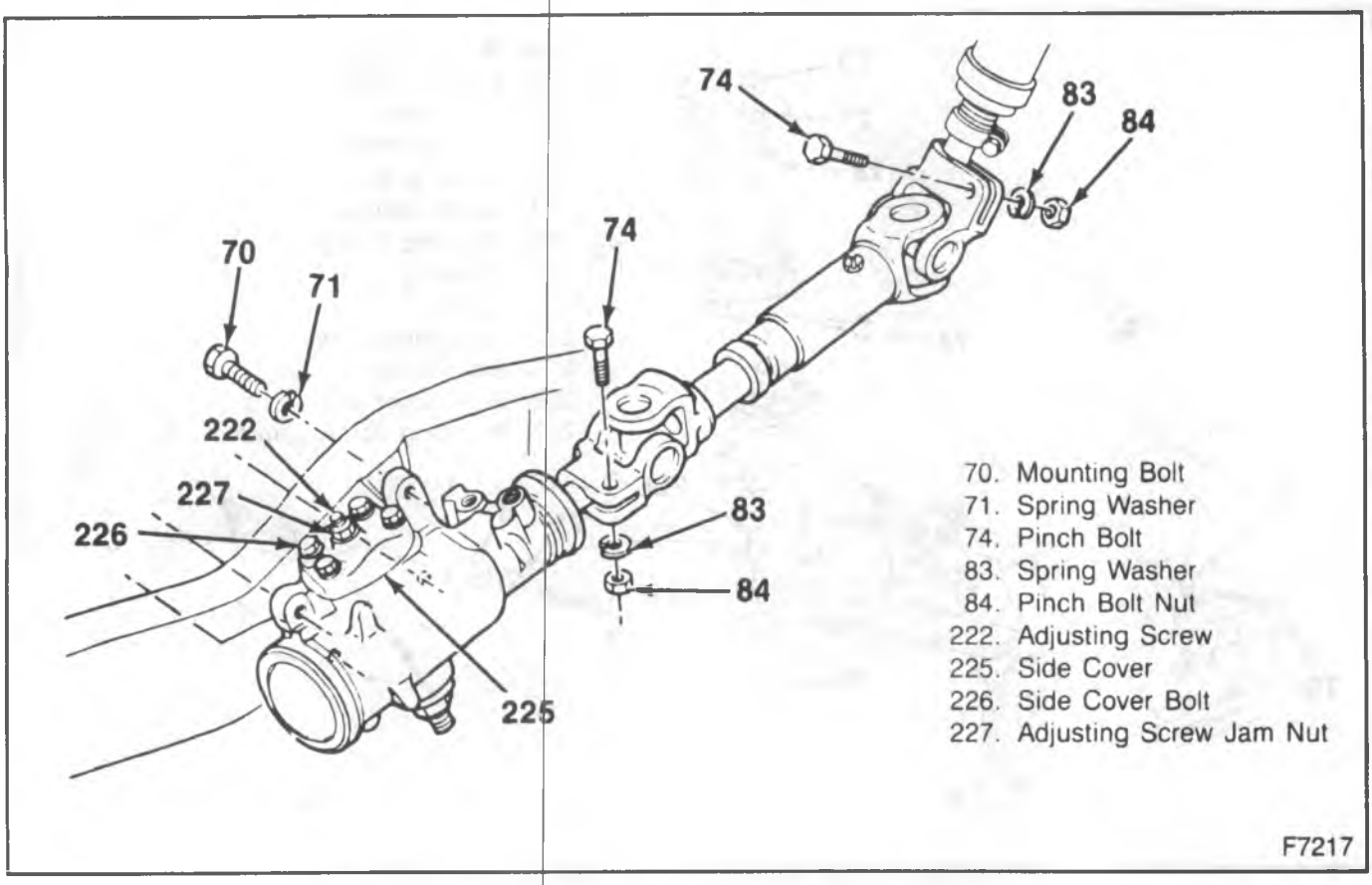

Figure 12—Steering Gear Installation—P3 Except RPO FS3 I-Beam Front Axle

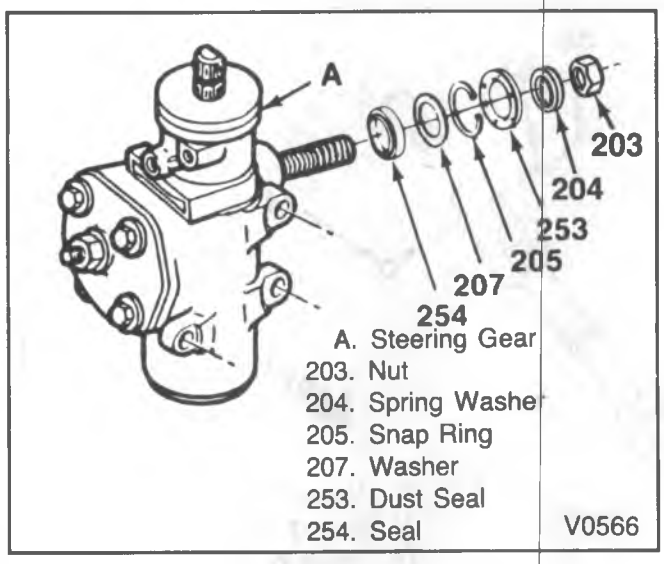

Figure 13—Pitman Seal Assembly

Install or Connect (Figures 13 and 14)

Tools Required:

J 4245 Internal Snap Ring Pliers

J 6219 Seal Installer

- Lubricate the new seal with power steering fluid.
- Apply a single layer of tape to the pitman arm shaft to avoid damaging the seals.

1. Seal (254).
2. Washer (207), using J 6219 to seat the seal.
   - The seal should be in far enough to install the snap ring.
3. Snap ring (205).
4. Center the steering gear.
   - Turn the steering wheel until it stops.
   - Turn the steering wheel in the opposite direction until it stops, while counting the number of turns.
   - Turn the wheel back 1/2 the number of turns in the previous step.
5. Dust seal (71).
6. Dust boot (72).
7. Pitman arm. Refer to STEERING LINKAGE (SEC. 3B3).
8. Bleed the system. Refer to "Bleeding the Power Steering System" in this section.

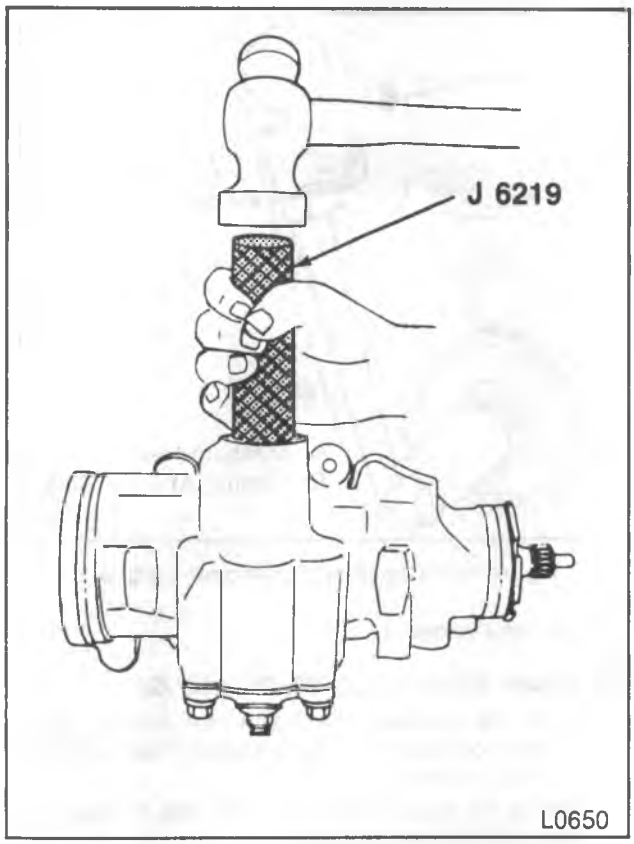

Figure 14—Installing Pitman Shaft Seals

STEERING GEAR ADJUSTMENTS

Important

- Before any adjustments are made to the steering gear, refer to "Diagnosis" for reviewing the possible steering system problems. The steering gear adjustment is made only as a correction and not as a periodic adjustment. Adjusting the steering gear in the vehicle is NOT recommended for two reasons:
  1. The complexity involved in adjusting the worm thrust bearing preload.
  2. The friction effect provided by the hydraulic fluid in the steering gear.

For proper adjustment, remove the steering gear from the vehicle. Drain the power steering fluid from the gear. Mount the gear in a vise and make the following adjustments:

The steering gear requires two adjustments which are: the worm thrust bearing preload and the pitman shaft over-center preload adjustment.

The worm thrust bearing preload is controlled by the amount of compression force exerted on the conical worm bearing thrust races by the adjuster plug.

The pitman shaft over-center preload is controlled by the pitman shaft adjuster screw, which determines the clearance between the rack piston and the pitman shaft sector teeth.

Important

- Adjust the worm thrust bearing preload first, then adjust the pitman shaft over-center preload.

Worm Bearing Preload

Adjust (Figures 1, 2 and 15 through 19)

Tool Required:

J 7624 Adjustable Spanner Wrench.

1. Loosen and remove the adjuster plug nut (245) (figure 15).
2. Turn the adjuster plug (240) in (clockwise), using J 7624, until the plug and thrust bearing are firmly bottomed in the housing.

   Tighten

   - Adjuster plug to 27 N•m (20 ft. lbs.).
3. Place an index mark on the housing even with one of the holes in the adjuster plug (figure 16).
4. Measure back (counterclockwise) 4.7-6.3 mm (3/16-1/4-inch) from the index mark and mark the housing (figure 17).
5. Rotate the adjuster plug back (counterclockwise) using J 7624 until the hole in the plug is aligned with the second mark on the housing (figure 18).
6. Install the adjuster plug nut (240).

   Tighten

   - Nut to 110 N•m (81 ft. lbs.). Be sure the adjuster plug does not turn when tightening the nut.
7. Use an inch-pound torque wrench and a 12-point deep socket to measure the required torque to turn the stub shaft (251). Take the reading with the handle of the torque wrench near the vertical position. Turn the stub shaft to the right stop and then back (counterclockwise) 1/4 turn at an even rate (figure 19). Record the torque reading.
8. The torque required to turn the stub shaft should be 0.45-1.13 N•m (4-10 in. lbs.). If the reading is above or below the specified torque, the adjuster plug may not be tightened properly or may have turned when the adjuster plug nut was tightened, or the thrust bearings (247) and races (246) may be damaged.

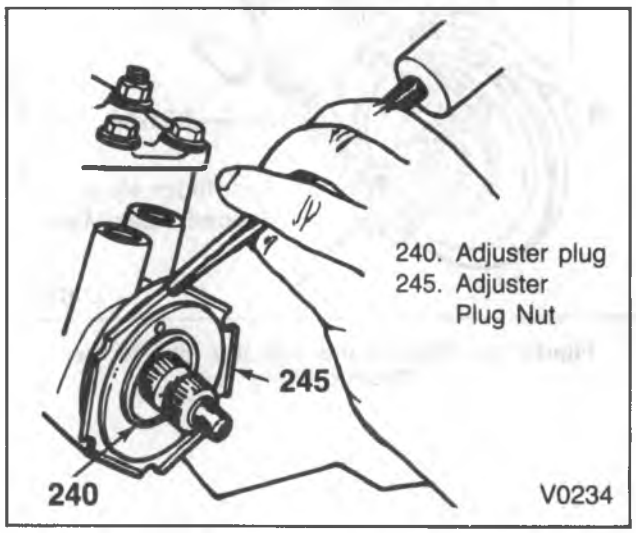

Figure 15—Loosening Adjuster Plug Nut

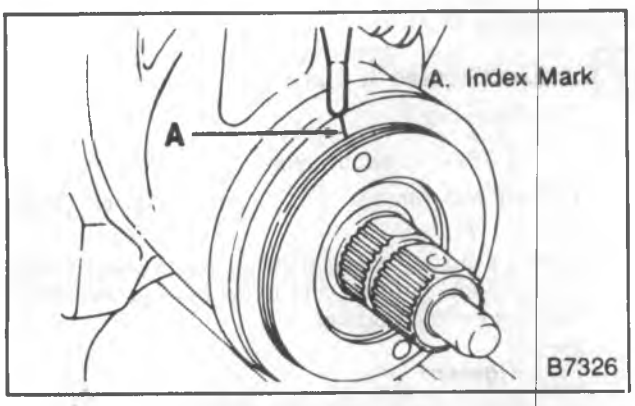

Figure 16—Marking Housing Even with Adjuster Plug

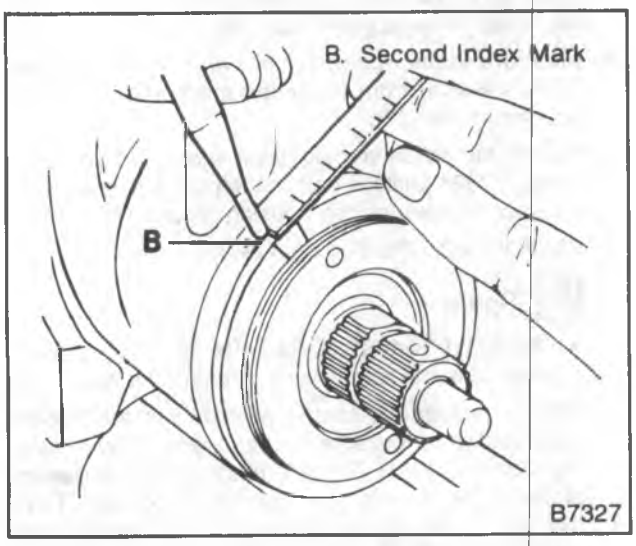

Figure 17—Remarking the Housing

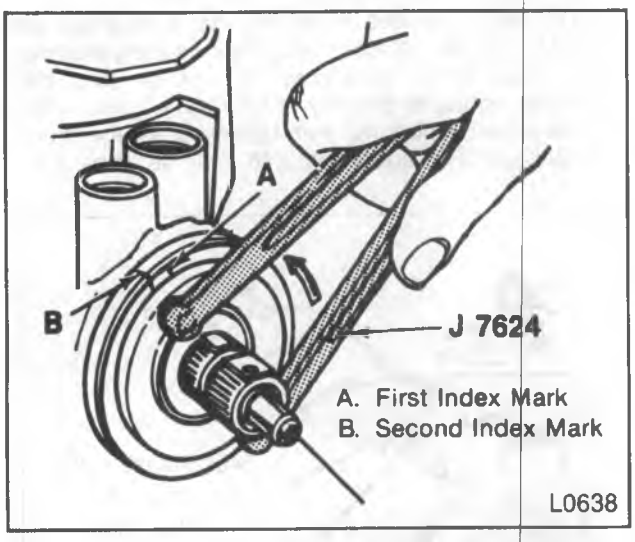

Figure 18—Aligning the Adjuster Plug to the Second Mark

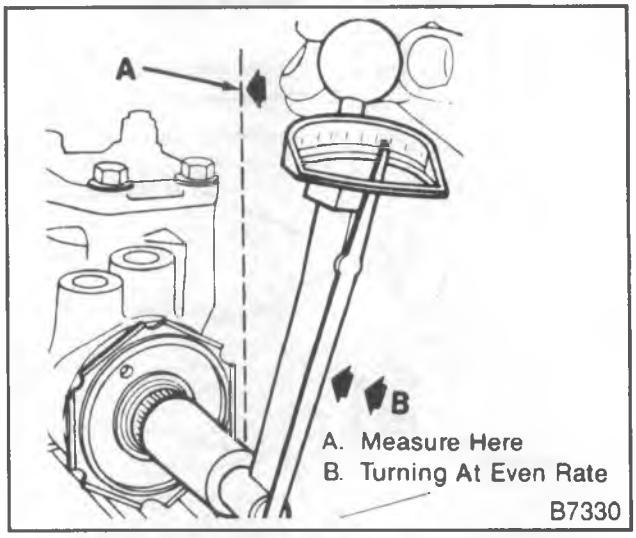

Figure 19—Checking Rotational Torque

Over Center Preload

Adjust (Figures 1, 2, 20, 21, and 22)

1. Turn the pitman shaft adjuster screw (222) counterclockwise until fully extended, then turn back 1/2 turn clockwise.
2. Rotate the stub shaft (251) from stop to stop and count the number of turns.
3. Starting at either stop, turn the stub shaft back 1/2 the total number of turns. This is the "center" of the gear.
   - When the gear is centered, the flat on the stub shaft should face upward and be parallel with the side cover (225) (figure 20) and the master spine on the pitman shaft should be in line with the adjuster screw (222) (figure 21).
4. Place the torque wrench, with the handle in the vertical position, on the stub shaft. Rotate the torque wrench 45 degrees each side of the center and record the highest drag torque measured on or near center (figure 22).
5. Adjust over-center drag torque by loosening the adjuster screw jam nut (227) and turning the pitman shaft adjuster screw (222) clockwise until the correct drag torque is obtained.
   - On new steering gears (under 400 miles), add 0.6-1.2 N•m (6-10 in. lbs.) torque to the previously measured worm bearing preload torque, but do not exceed a total steering gear preload of 2 N•m (18 in. lbs.)
   - On used steering gears (400 miles or more) add 0.5-0.6 N•m (4.5 in. lbs.) torque to the previously measured worm bearing preload torque, but do not exceed a total steering gear preload of 1.5 N•m (14 in. lbs.).

Tighten

- Adjuster screw jam nut (17) to 47 N•m (35 ft. lbs.).

6. Install the steering gear. Refer to "Steering Gear Installation" in this section.
7. Fill the pump reservoir with power steering fluid and bleed the system. Refer to "Bleeding the Power Steering System" in this section.

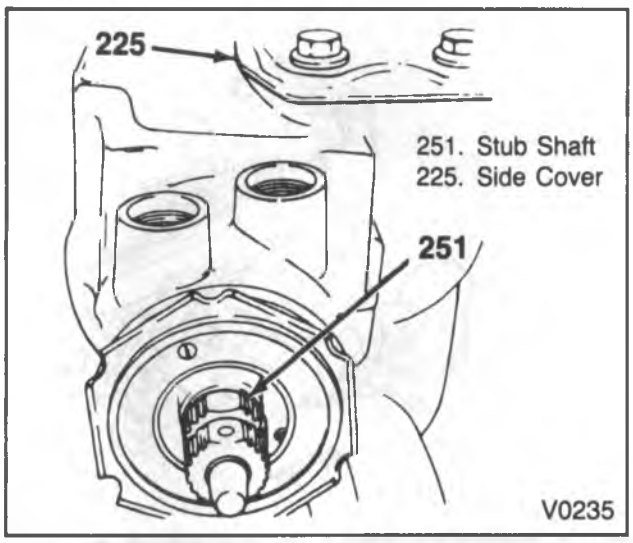

Figure 20—Aligning the Stub Shaft

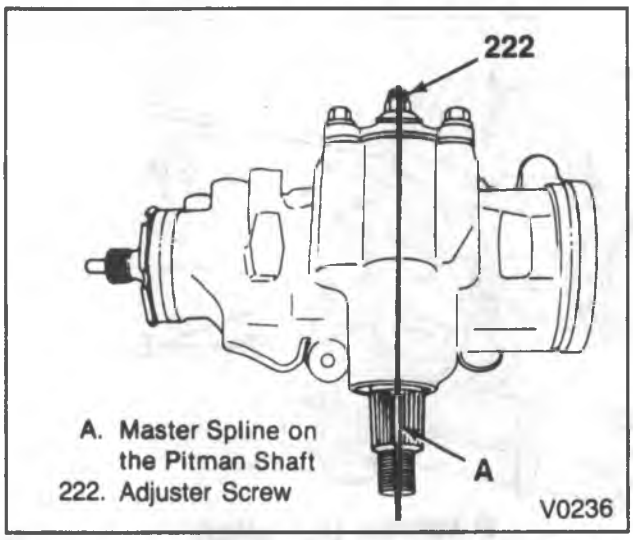

Figure 21—Aligning the Pitman Shaft Master Spline

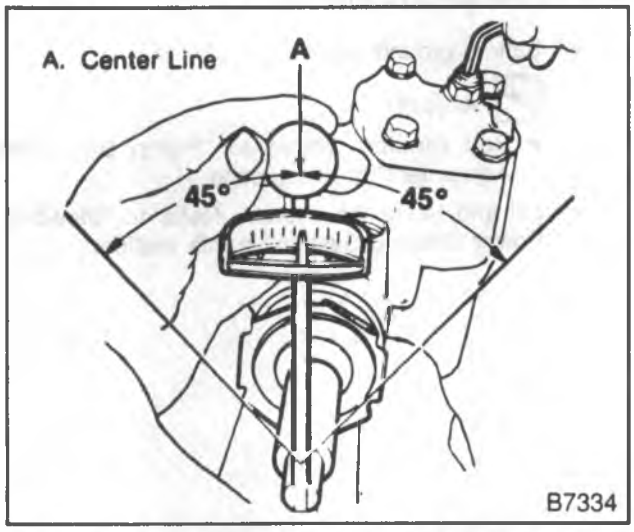

Figure 22—Checking Over-Center Rotational Torque

POWER STEERING PUMP REPLACEMENT (R and P MODELS)

Remove or Disconnect (Figures 23 through 27)

Tool Required:

J 25034-B Power Steering Pulley Remover

- Place a drain pan below the pump

1. Battery ground cable.
2. Pump belt.
3. Hoses at the pump. Raise the hose up to prevent drainage of the oil. Cap or tape the ends of the hose and pump to prevent the entrance of dirt.
   - On models with remote reservoir, disconnect the reservoir hose at the pump. Cap the pump fittings.
   - Remove and cap remaining pump line.
4. Pump adjusting bolts, nuts and brackets.
5. Pump assembly.
6. Pulley from the pump.
   - Install J 25034-B. Be sure the pilot bolt bottoms in the pump shaft by turning the nut to the top of the pilot bolt.
   - Hold the pilot bolt and turn the nut counterclockwise (figure 27).

Install or Connect (Figures 23 through 27)

Tool Required:

J 25033-B Power Steering Pump Pulley Installer.

1. Brackets to the pump.
2. Pulley to the pump.
   - Place pulley on the end of the pump shaft and install J 25033-B. Be sure the pilot bolt bottoms in the shaft by turning the nut to the top of the pilot bolt.
   - Hold the pilot bolt and turn the nut clockwise (figure 27).

- On models equipped with a remote power steering pump reservoir fill the pump housing with as much fluid as possible before mounting.

3. Pump assembly and attaching parts loosely to the engine.
4. Power steering hoses to the pump. Hoses installed out of position may be subjected to chafing or other abuses during sharp turns. Refer to "Power Steering Hoses" in this section.

Important

- Do not start the engine with any power steering hoses disconnected. After connecting the power steering hoses make sure there is clearance between the hoses and the drive belt, sheet metal or any other components where hose chafing or interference could result.

- Fill the reservoir. Bleed the pump by turning the pulley backwards (counterclockwise as viewed from the front) until the air bubbles cease to appear.

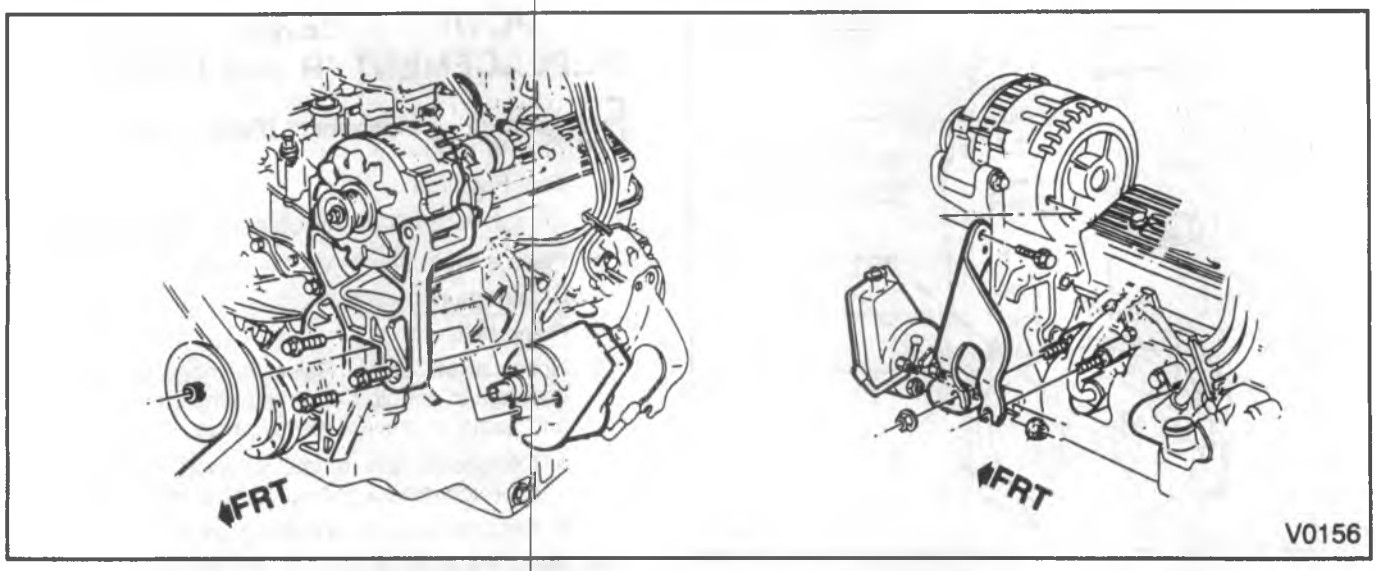

Figure 23—Power Steering Pump Mounting—5.7L Engine

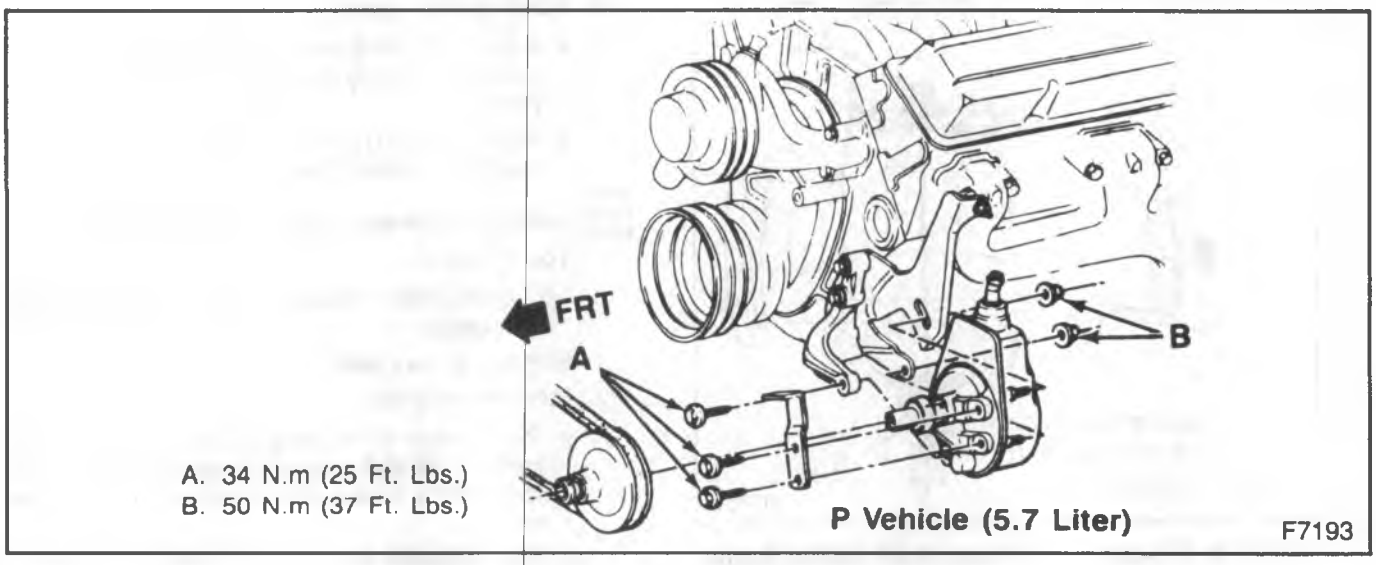

Figure 24—Power Steering Pump Mounting—5.7L Engine

Tighten

- All fasteners. Refer to the appropriate figure and the "Specifications" at the end of this section.

5. Pump belt over the pulley.
6. Battery ground cable.

Adjust

- Belt tension. Refer to "Pump Belt Tension Adjustment" in this section.
- Fill and bleed the system. Refer to "Bleeding the Power Steering System" in this section.

POWER STEERING PUMP REPLACEMENT (V MODELS)

Remove or Disconnect (Figures 25 through 27)

Tool Required

J 25034-B Power Steering Pulley Remover

- Place a drain pan below pump.

1. Negative battery cable.
2. Serpentine belt.
3. Power steering pump pulley using J 25034-B (figure 27).
4. Pump from bracket (figures 25 and 26).
5. Pressure and return hoses at the pump. Raise hoses up to prevent drainage. Cap or tape the ends of the hoses and pump to prevent the entrance of dirt.

Install or Connect

Tool Required:

J 25033-B Power Steering Pulley Installer

1. Pressure and return lines. Hoses installed out of position may be subject to chafing or other abuses during sharp turns. Refer to "Power Steering Hoses" in this section.

Important

- Do not start engine with any power steering hoses disconnected. After connecting the hoses make sure there is clearance between the hoses and the drive belt, sheet metal, or any other components where hose chafing or interference could result.

NOTICE: See "Notice" on page 3B1-1 of this section.

2. Power steering pump onto bracket (figure 25 and 26).

Tighten

- All fasteners. Refer to the "Specifications" at the end of this section.

3. Power steering pulley using J 25033-B (figure 27).
4. Serpentine belt.
5. Fill reservoir. Bleed the pump by turning pulley counterclockwise (as viewed from the front of vehicle) until the bubbles cease to appear.
6. Reservoir cap.
7. Negative battery cable.

- Fill and bleed the system. Refer to "Bleeding the Power Steering System" in this section.

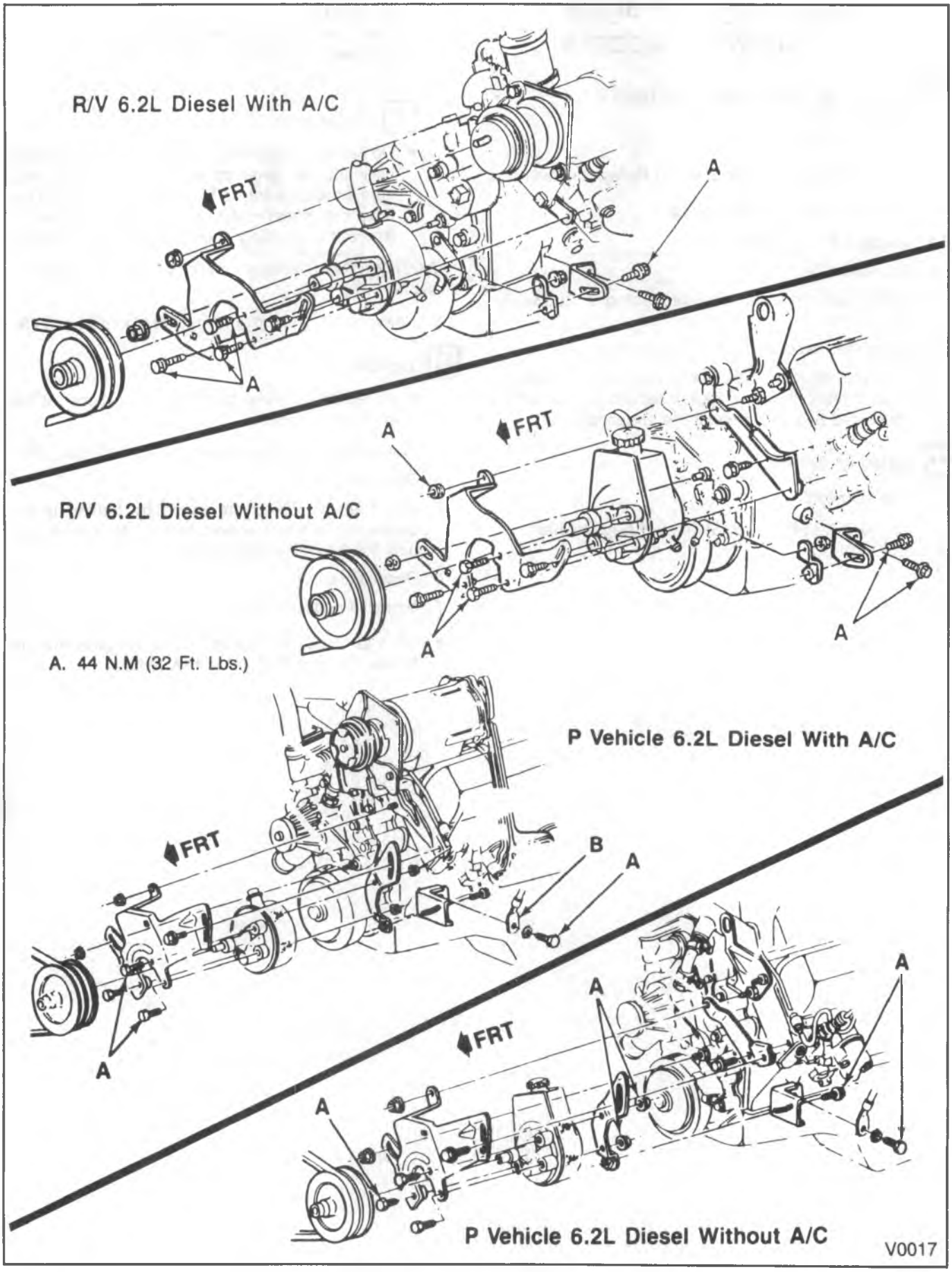

Figure 25—Power Steering Pump Mounting—6.2L Diesel

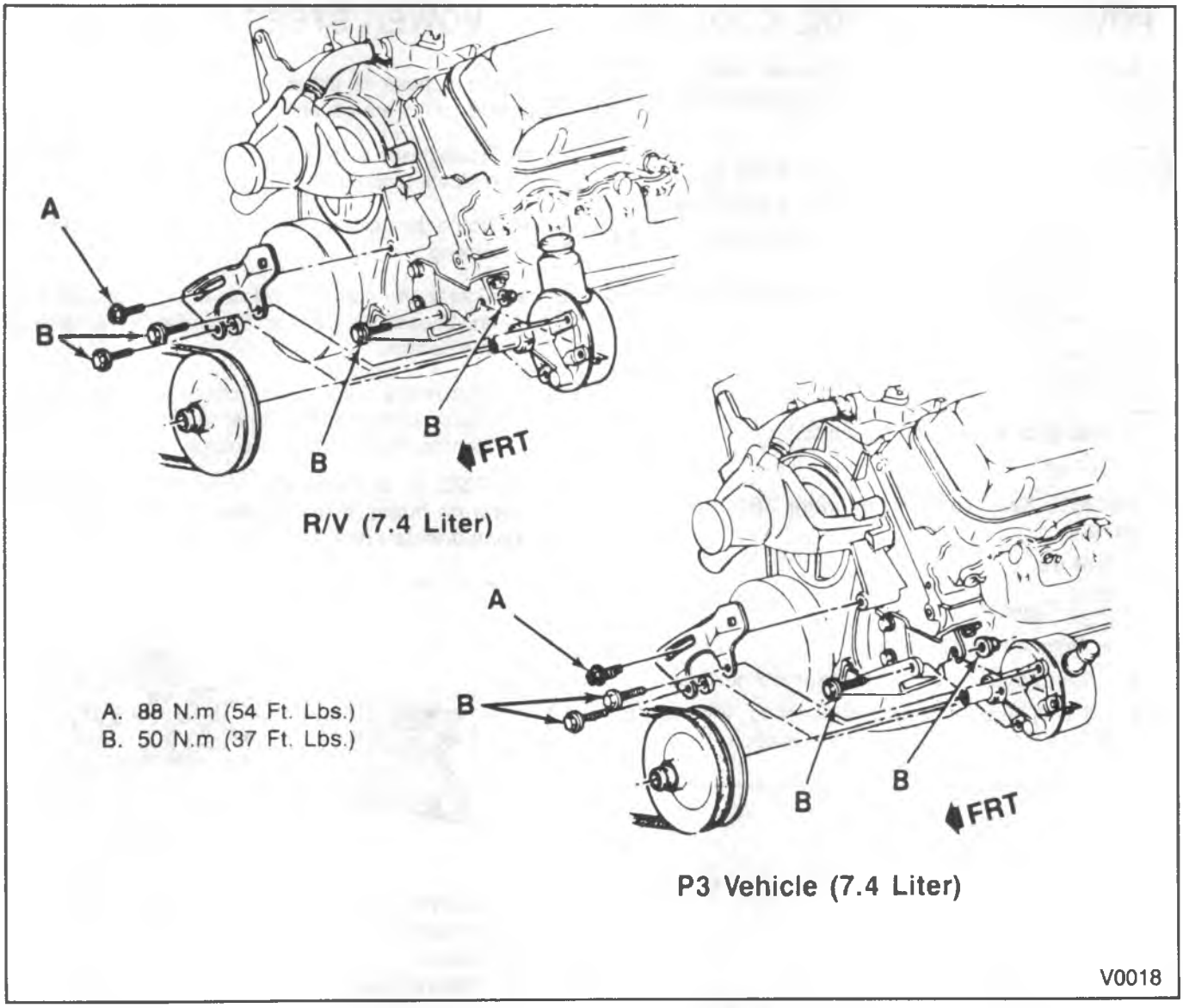

Figure 26—Power Steering Pump Mounting—7.4L Engine

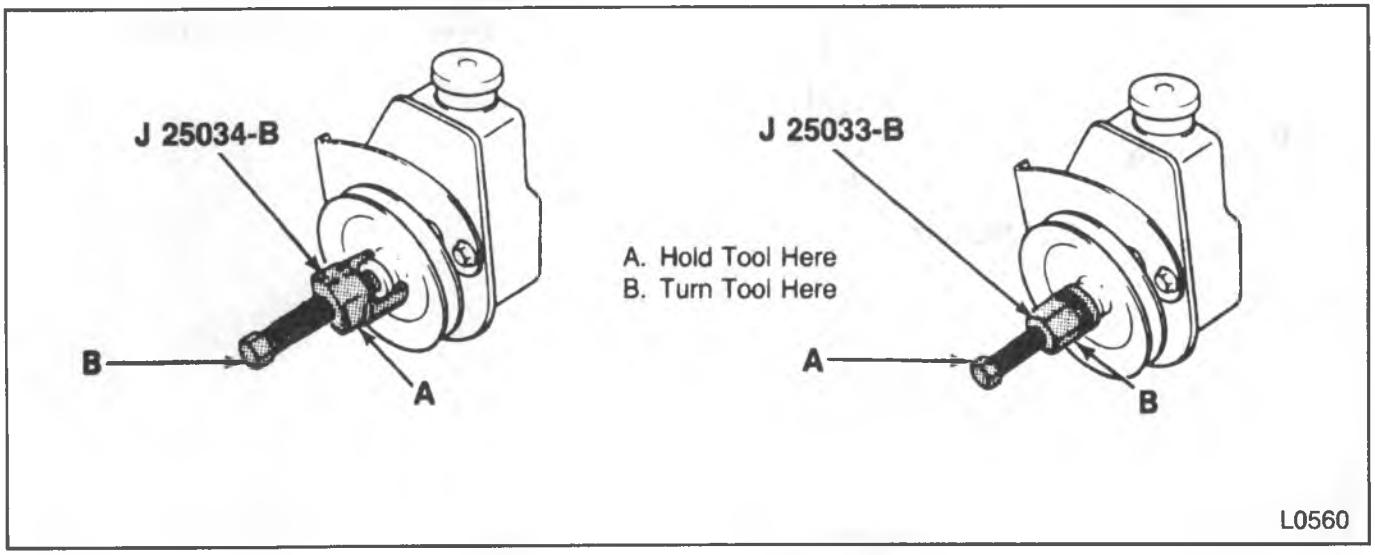

Figure 27—Installing and Removing Pulley

POWER STEERING OIL COOLERS

Some models are equipped with power steering system oil coolers. The cooler is a tubular loop type design and is mounted on the lower radiator support.

Remove or Disconnect (Figure 28)

1. Cooler power steering hose/pipe connections.
   - Be prepared to catch any fluid that may drain out at connections.
   - Cap power steering hoses/pipes and cooler ends to prevent entry of dirt.
2. Bolts (B).
3. Cooler.

Install or Connect (Figure 28)

1. Cooler.

NOTICE: See "Notice" on page 3B1-1 of this section.

2. Bolt (B).

Tighten

- Bolts 4 N•m (35 in. lbs.).

3. Cooler power steering hose/pipe connections.

- Fill and bleed the system. Refer to "Bleeding the Power Steering System" in this section.

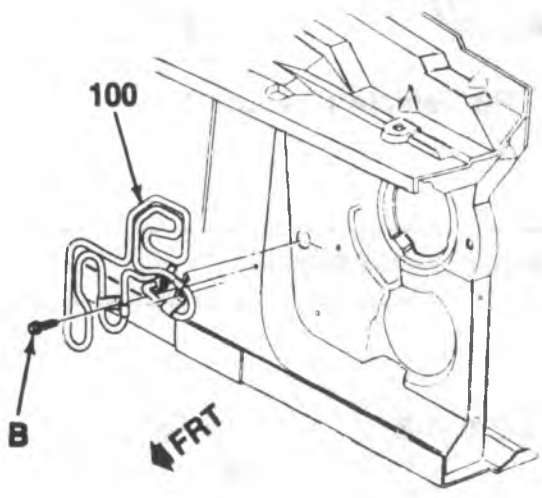

R/V Models

B. Bolt; 4 N·m (36 In. Lbs.)
100. Loop-Type Oil Cooler

V0019

Figure 28—Power Steering Oil Cooler

POWER STEERING HOSES

When a hose is either reinstalled or replaced, the following points are essential:

- Route hoses in the same position they were in before removal (figures 29 through 34).
- Route hoses smoothly; avoid sharp bends and kinking.
- Tighten the pump end hose fitting, gear line fitting, and booster line fitting to "Specifications" at the end of this section.
- After hoses are installed, check for leaks while the system is being bled. Refer to "Bleeding the Power Steering System" in this section.

NOTICE: Do not start the engine with any power steering hoses disconnected, or damage to the components could occur.

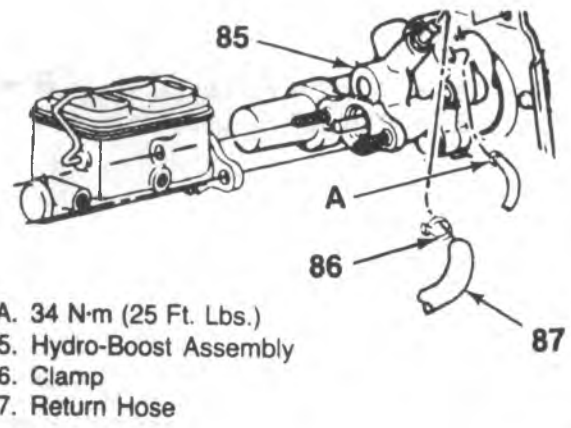

A. 34 N·m (25 Ft. Lbs.)
85. Hydro-Boost Assembly
86. Clamp
87. Return Hose

L0797

Figure 29—Hydro-Boost Lines

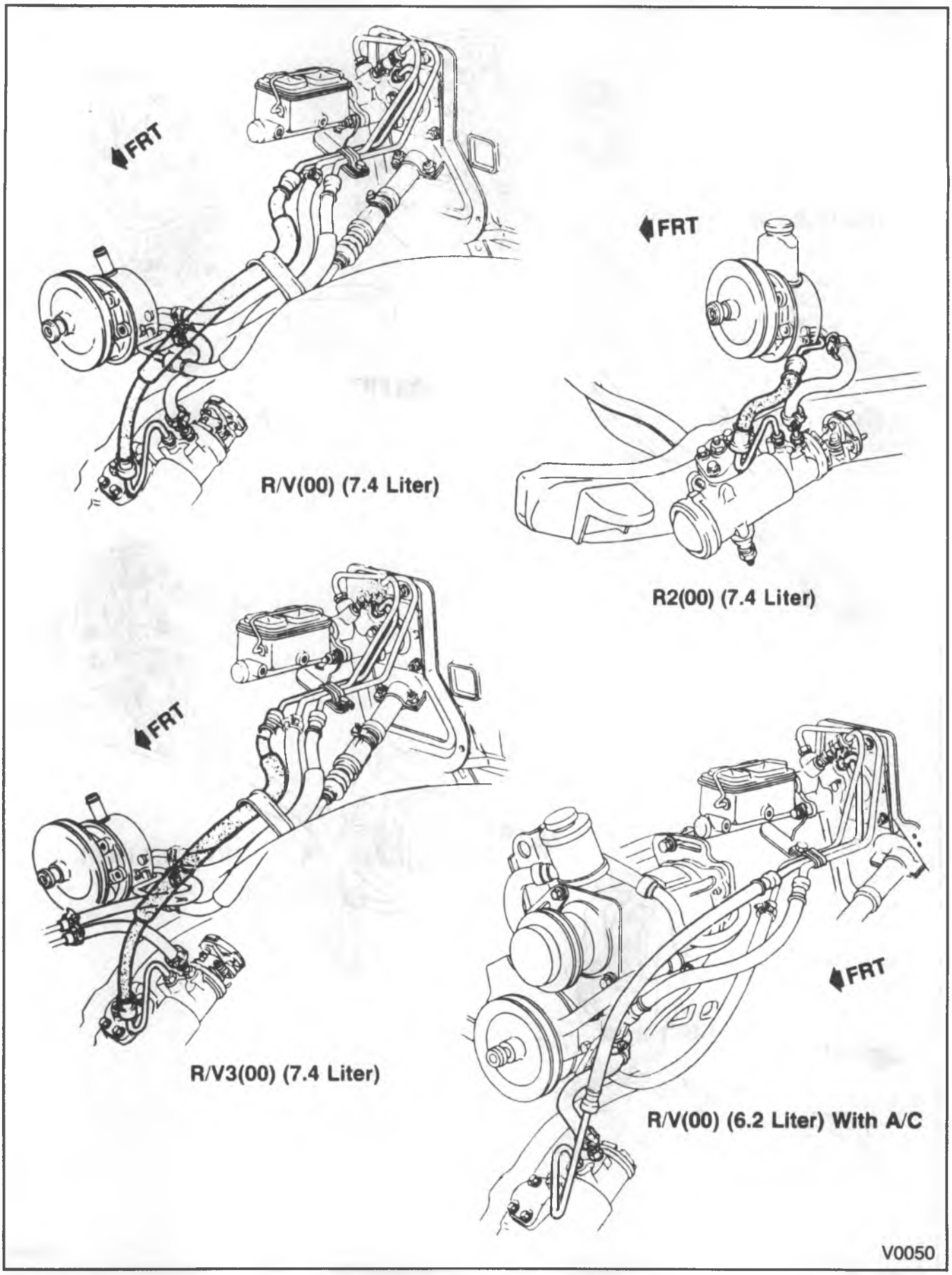

Figure 30—Power Steering Hoses—R/V Model

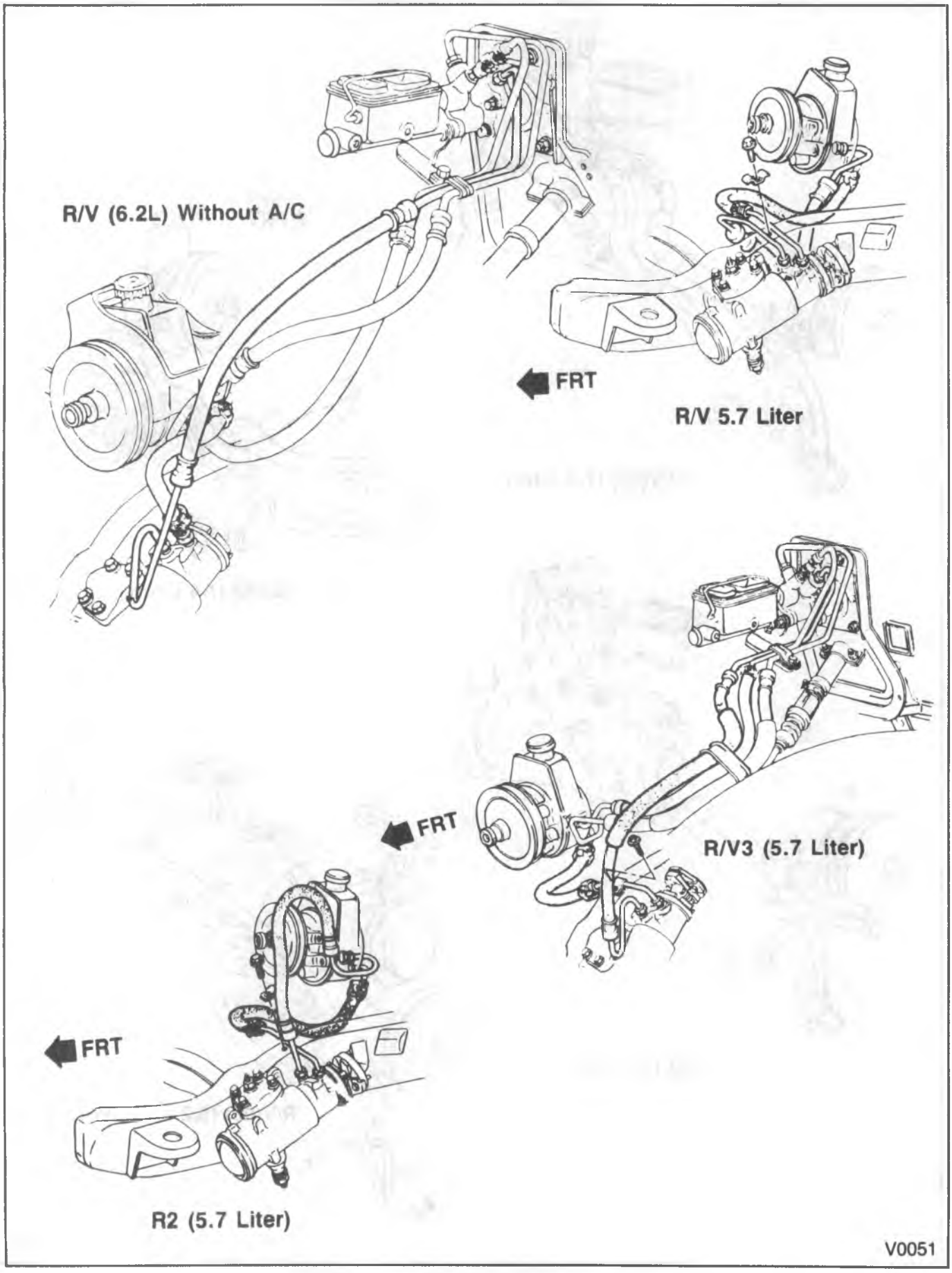

Figure 31—Power Steering Hoses—R/V Model

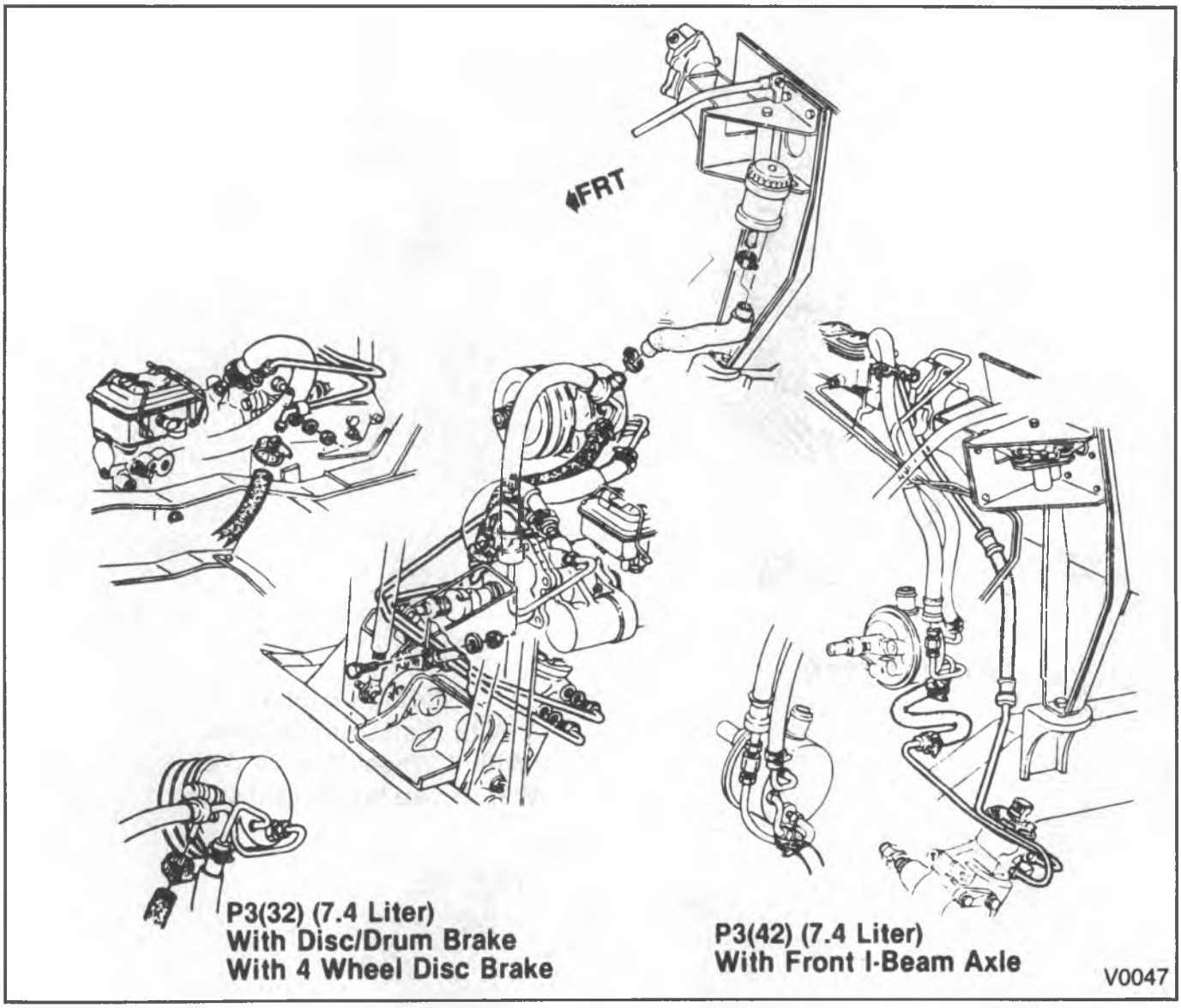

Figure 32—Power Steering Hoses—P Model

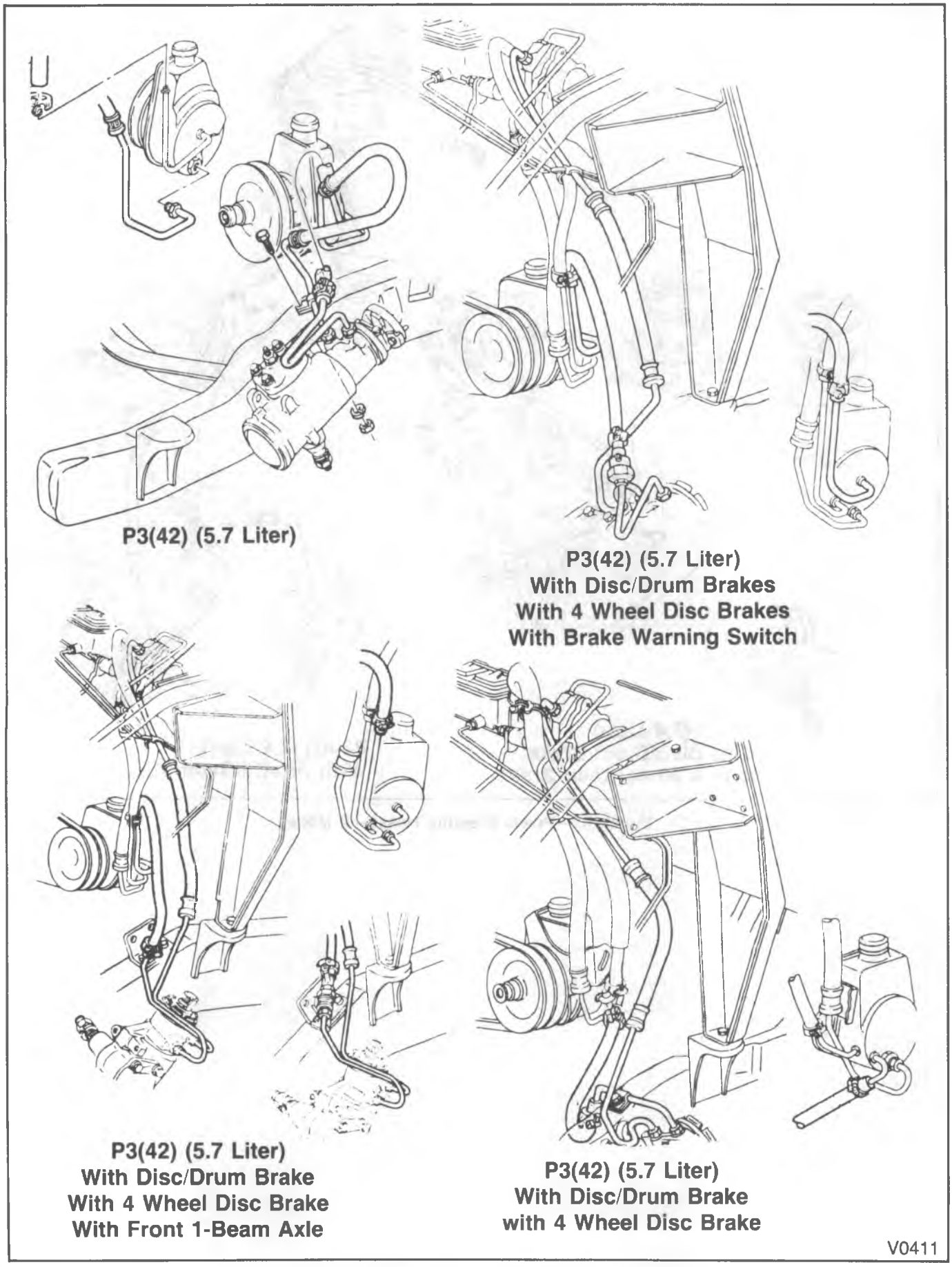

Figure 33—Power Steering Hoses—P Model

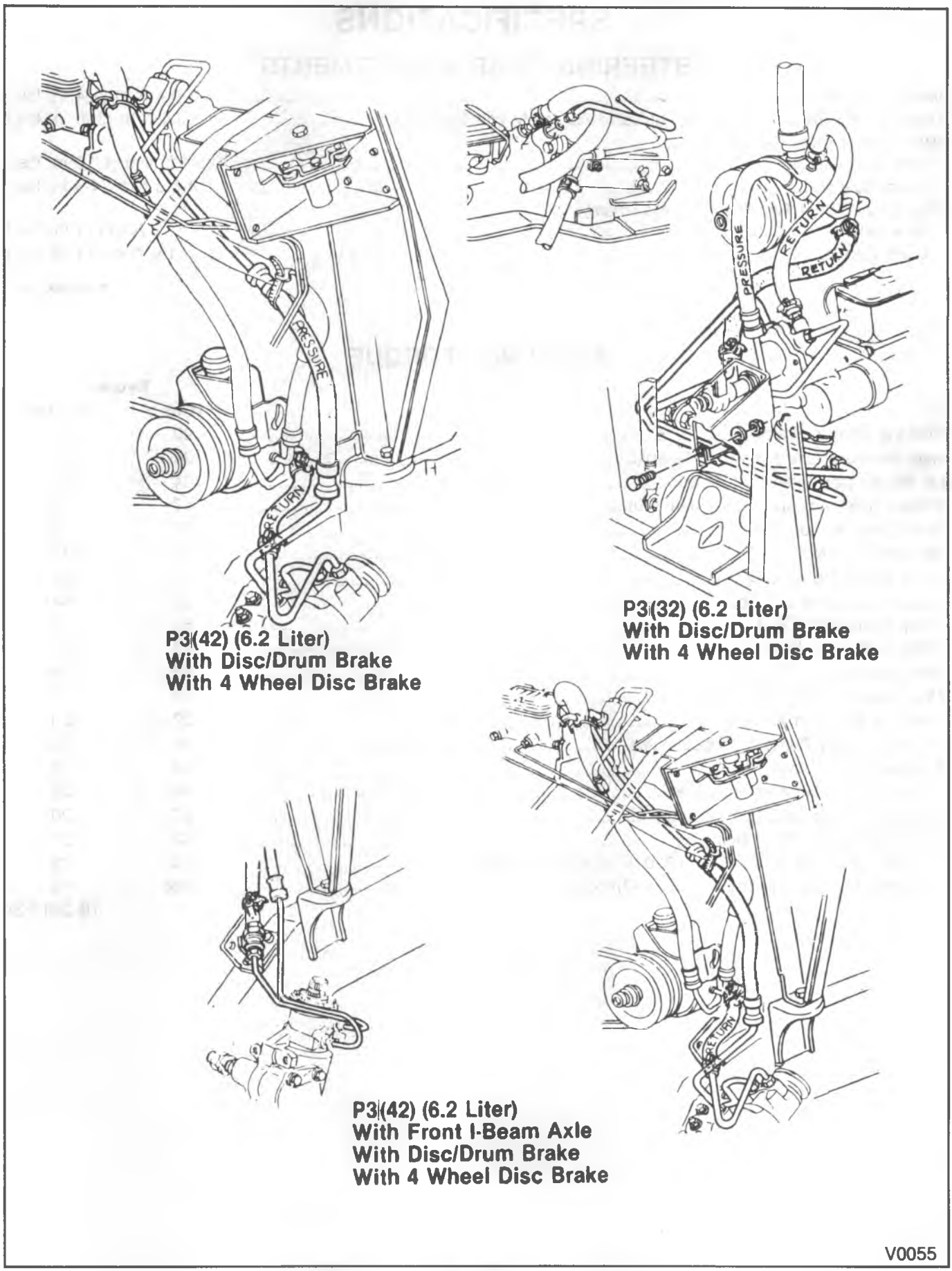

Figure 34—Power Steering Hoses—P Model

SPECIFICATIONS

STEERING GEAR ADJUSTMENTS

Valve assembly and Seal Drag	0.1-0.4 N·m (1-4 in. lbs.)
Thrust earing Preload (In Excess of Valve Assembly and Seal Drag)	0.3-0.4 N·m (3-4. in. lbs.)
Pitman Shaft Over Center Preload	
New Gear	0.6-1.2 N·m (6-10 in. lbs.)
Used Gear	0.4-0.5 N·m (4-5 in. lbs.)
Final Over Center Reading (Total-Maximum)	
New Gear	2 N·m (18 in. lbs.)
Used Gear	1.6 N·m (14 in. lbs.)

GMTB-4007-A

FASTENER TORQUE

	Torque	
	N·m	Ft. Lbs.
Steering Gear to Frame	90	66
High Pressure Line Fitting (At Gear)	34	25
Oil Return Line Fitting (At Gear)	34	25
Pitman Shaft Adjuster Screw Jam Nut	47	35
Side Cover to Housing Bolt	60	45
Adjuster Plug Nut	110	81
Pump Bracket to Engine	33	24
Adjusting Bracket and Bolt	88	64
Pump to Bracket (Gas)	50	37
Pump to Bracket (Diesel)	43	32
Reservoir Bolt (At Pump)	48	35
Flow Control Fitting (At Pump)	48	35
Pressure Hose (At Pump)	27	20
Power Steering Pump to Booster Line	34	25
Booster to Gear Line	34	25
Return Line at Booster and Gear	34	25
Coupling Flange Nuts	27	20
Coupling Flange Pinch Bolt	42	31
Intermediate Shaft Pinch Bolts (P20 + 30(42) Excluding FS3)	102	75
Intermediate Shaft Pinch Bolts (P30(42)FS3)	102	75

TB-3017-2A

SPECIFICATIONS (CONT.)

PUMP SPECIFICATIONS

Vehicle	Part Number	Model	Minimum Output (1) GPM	Minimum Output (1) L/Min.	Maximum Output (2) GPM	Maximum Output (2) L/Min.	Relief Valve Settings Minimum PSI	Relief Valve Settings Minimum kPa	Relief Valve Settings Maximum PSI	Relief Valve Settings Maximum kPa
R/V Model	7838933	132-P-122	1.32	5.00	3.1-3.5	11.7-13.2	1200	8274	1300	8964
	7838934	132-P-123	1.32	5.00	3.1-3.5	11.7-13.2	1350	9308	1450	9998
	7838935	132-P-124	1.32	5.00	3.1-3.5	11.7-13.2	1200	8274	1300	8964
	7838936	132-P-125	1.32	5.00	3.1-3.5	11.7-13.2	1350	9308	1450	9998
	7839798	132-P-144	1.32	5.00	3.1-3.5	11.7-13.2	1350	9308	1450	9998
	7839800	132-P-146	1.32	5.00	3.1-3.5	11.7-13.2	1200	8274	1300	8964
	7839801	132-P-147	1.32	5.00	3.1-3.5	11.7-13.2	1200	8274	1300	8964
	7839802	132-P-148	1.32	5.00	3.1-3.5	11.7-13.2	1200	8274	1300	8964
	7839804	132-P-150	1.32	5.00	3.1-3.5	11.7-13.2	1200	8274	1300	8964
	7839813	132-P-159	1.32	5.00	3.1-3.5	11.7-13.2	1350	9308	1450	9998
	7839816	132-P-161	1.32	5.00	3.1-3.5	11.7-13.2	1350	9308	1450	9998
	26000518	132-P-260	1.32	5.00	3.1-3.5	11.7-13.2	1200	8274	1300	8964
	26003926	132-P-280	1.32	5.00	3.1-3.5	11.7-13.2	1200	8274	1300	8964
	26010182	132-P-290	1.32	5.00	3.1-3.5	11.7-13.2	1200	8274	1300	8964
	26010182	132-P-291	1.32	5.00	3.1-3.5	11.7-13.2	1350	9308	1450	9998
P Model	7839808	132-P-154	1.32	5.00	2.4-2.8	9.1-10.6	1200	8274	1300	8964
	7839809	132-P-155	1.32	5.00	2.4-2.8	9.1-10.6	1200	8274	1300	8964
	7839812	132-P-158	1.32	5.00	2.4-2.8	9.1-10.6	1350	9308	1450	9998
	7842032	132-P-226	1.32	5.00	3.1-3.5	11.7-13.2	1200	8274	1300	8964
	7842033	132-P-227	1.32	5.00	3.1-3.5	11.7-13.2	1200	8274	1300	8964
	7842490	132-P-231	1.32	5.00	2.4-2.8	9.1-10.6	1350	9308	1450	9998
	7842491	132-P-232	1.32	5.00	3.1-3.5	11.7-13.2	1200	8274	1300	8964

1— Output of Power Steering Fluid at 32°C (90°F) temperature when operating pump at 465 rpm against 4585-5068 kPa (665-735 psi) pressure.

2— Output of Power Steering Fluid at 32°C (90°F) temperature when operating pump at 1500 rpm against 345 kPa (50 psi) pressure.

TB-3018-2A

PARTS INFORMATION

PART NAME	GROUP
Steering Gear	6.508
Hydraulic Steering Pump	6.505
Hydraulic Steering Pump Hose	6.670
Hydraulic Steering Pump Pulley	6.655
Belt	1.066
Pitman Arm	6.859
Generator and Power Steering Pump Bracket	2.277
Hydraulic Pump Brace & Bracket	6.606
Power Steering Fluid Reservoir & Cap	6.635
Pitman Shaft Seal (Seal Kit)	6.855

GMTB-3140-2A

SPECIAL TOOLS

1. J 5176-D

2. J 5176-20

3. J 5421-02

4. 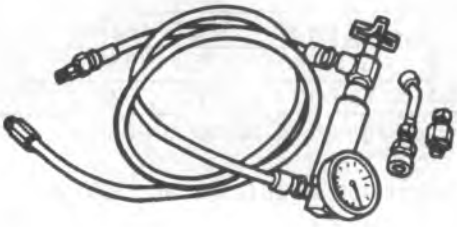 J 25323-A

5. 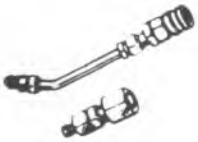 J 29525

6. J 23600-B

7. J 6219

8. J 7624

9. J 25034-B

10. J 25033-B

1. Power Steering Pressure Tester
2. Gauge Adapter 18mm Power Steering
3. Thermometer
4. Power Steering System Analyzer
5. Power Steering Analyzer 18mm Adapter
6. V-Belt Universal Tension Gauge
7. Pitman Shaft Seal Installer
8. Bearing Preload Spanner Wrench
9. Power Steering Pump Pulley Remover
10. Power Steering Pump Pulley Installer

V0052

SECTION 3B3

STEERING LINKAGE

NOTICE: When fasteners are removed, always reinstall them at the same location from which they were removed. If a fastener needs to be replaced, use the correct part number fastener for that application. If the correct part number fastener is not available, a fastener of equal size and strength (or stronger) may be used. Fasteners that are not reused, and those requiring thread locking compound will be called out. The correct torque value must be used when installing fasteners that require it. If the above conditions are not followed, parts or system damage could result.

CONTENTS

SUBJECT	PAGE
Description	3B3- 1
Diagnosis	3B3- 2
On-Vehicle Service	3B3- 2
Idler Arm Inspection	3B3- 2
Idler Arm Adjustment — P Motorhome	3B3- 2
Idler Arm Replacement	3B3- 4
Relay Rod Replacement	3B3- 5
Pitman Arm Replacement	3B3- 5
Steering Shock Absorber Inspection	3B3- 6
Steering Shock Absorber Replacement	3B3- 7
Tie Rod Replacement R and P Models Except Motorhome	3B3- 8
Tie Rod Replacement — V and P FS3 Models	3B3- 9
Connecting Rod Replacement — V and P FS3 Models	3B3- 9
Connecting Rod Replacement — P Motorhome	3B3-12
Specifications	3B3-13
Special Tools	3B3-14

DESCRIPTION

The steering linkage for the R and P3 non-Motorhome models is composed of a pitman arm, idler arm, relay rod, two adjustable tie rods and a steering shock absorber. When the steering wheel is turned, the gear rotates the pitman arm which forces the relay rod to one side. The tie rods, which are connected to the relay rod by ball studs, transfer the steering force to the wheels. The tie rods are adjustable and are used for toe-in adjustments. The relay rod is supported by the pitman arm and idler arm. The idler arm pivots on a support attached to the frame rail.

The P3 Motorhome steering linkage has an adjustable tie rod assembly similar to the one described above. When the steering wheel is turned, the gear rotates the pitman arm which forces the non-adjustable connecting rod and relay arm to move the relay rod to one side. The relay arm and idler arm are attached to the frame by support assemblies. The support assemblies are adjustable for shaft end play. The steering shock absorber is attached to the frame and the relay arm (figures 1 and 2).

The V-model has a front driving axle assembly and the P3 with RPO-FS3 has an I-Beam axle assembly. The steering linkage consists of an adjustable connecting rod, steering shock absorber, pitman arm and a tie rod which connects the two steering knuckles together (figures 7 and 8).

The overall condition of the steering linkage affects steering performance. If parts are bent, damaged, worn or poorly lubricated, improper and possibly dangerous steering action will result.

Whenever any steering linkage components are repaired or replaced, check the steering geometry and front end alignment. Refer to FRONT END ALIGNMENT (SEC. 3A).

DIAGNOSIS

Refer to POWER STEERING (SEC. 3B1) in this manual.

ON-VEHICLE SERVICE

IDLER ARM INSPECTION

Inspect (Figure 3)

1. Raise the vehicle. Be sure that the front wheels rotate freely, the steering mechanism turns freely, and the wheels are positioned straight ahead.
2. Position a dial indicator against the top of the idler arm grease cap.
3. Place a spring scale near the relay rod end of the idler arm.
   - Apply a 110 N (25 lb.) force upward and then downward.
4. Measure the total distance the idler arm moves under the applied force specified.
   - Allow no more than ± 3.18 mm (1/8 in.) deflection in each direction, for a total of 6.32 mm (1/4 in.) (figure 3).
5. Replace the idler arm if it fails this test. Refer to "Idler Arm Replacement" in this section.

- For P3 Motorhomes, the idler arm is adjustable. Refer to "Idler Arm Adjustment — P3 Motorhome" in this section. If replacement is necessary, refer to "Idler Arm Replacement" in this section.

Important

- Jerking the right wheel and tire assembly back and forth to cause an up and down movement of the idler arm, is NOT an acceptable testing procedure. There is no control on the amount of force being applied to the idler arm.
- Loose idler arms or other suspension or steering system defects can create a shimmy condition. Shimmy problems may also originate at the wheel and tire assembly from dynamic imbalance, run out or force variations, or even road surface irregularities. Consider all possible causes of a shimmy complaint. Refer to WHEELS AND TIRES (SEC. 3E).

IDLER ARM ADJUSTMENT — P3 MOTORHOME

The frame-mounted idler support assemblies (10) (figure 2) are adjustable for support shaft end play. Check for idler arm movement as described in "Idler Arm Inspection". If the idler arm fails this test, adjust the support shaft end play.

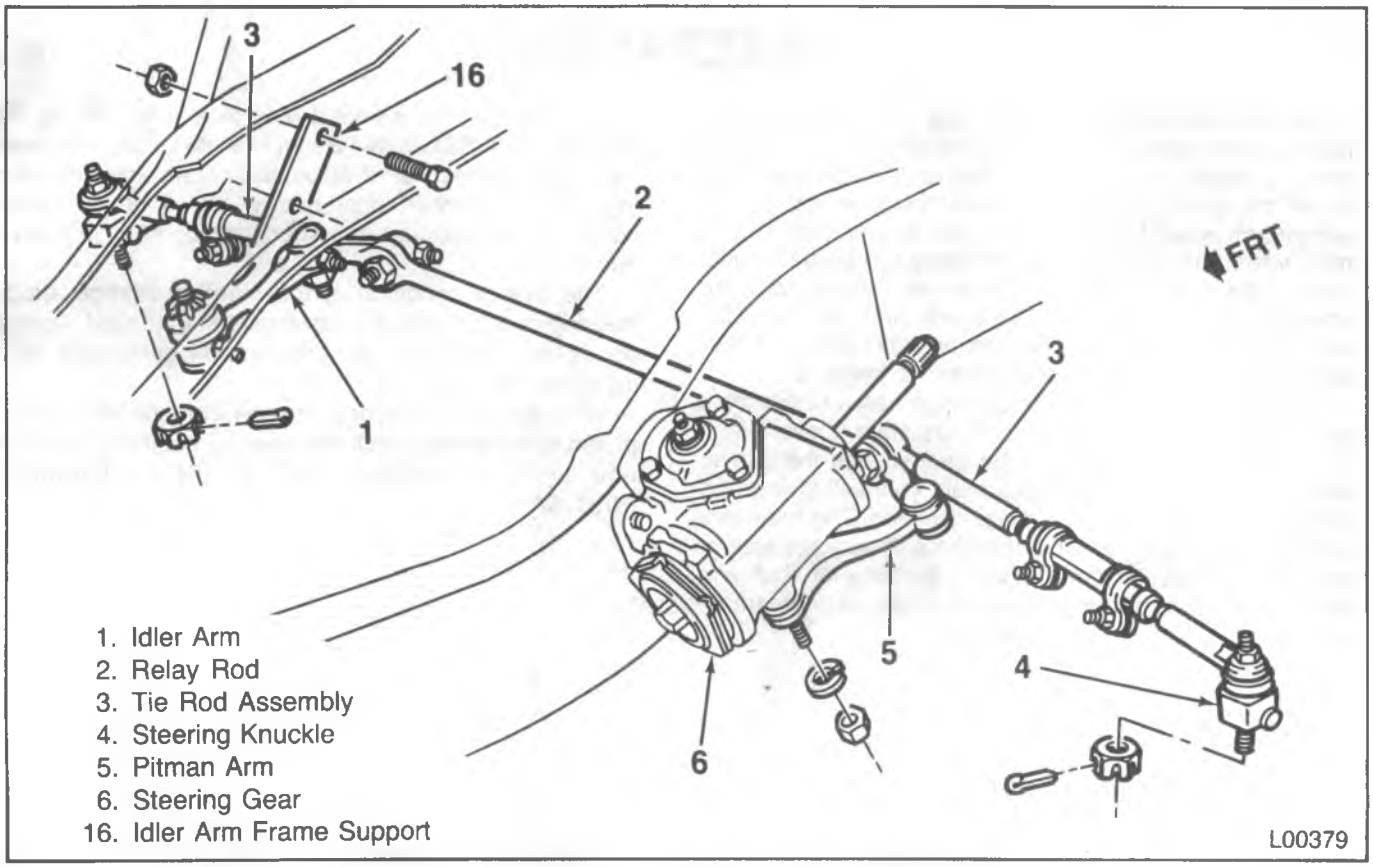

Figure 1 — Steering Linkage — R-Model, Typical P Models (except Motorhome)

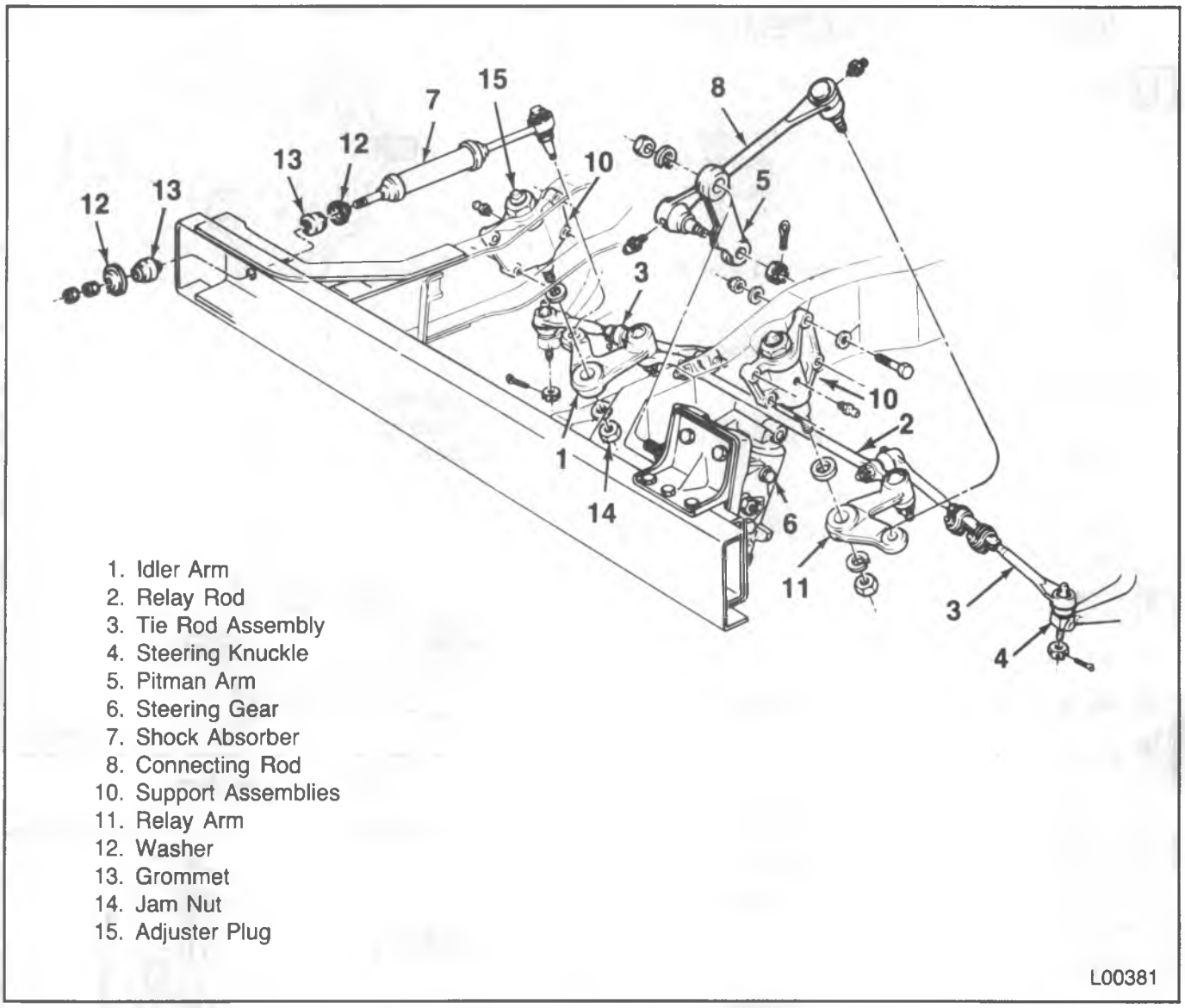

Figure 2—Steering Linkage — P3 Motorhome

Adjust (Figure 2)

1. Loosen the support assembly (10) jam nut (14).
2. Tighten the adjuster plug (15) to metal-to-metal contact.
3. Back off the adjuster plug (15) 1/8 of a turn (1/2 of a flat on the square nut).

Tighten

- Jam nut (14) to 40 N•m (30 ft. lbs.). The adjuster plug (15) should not be allowed to rotate.

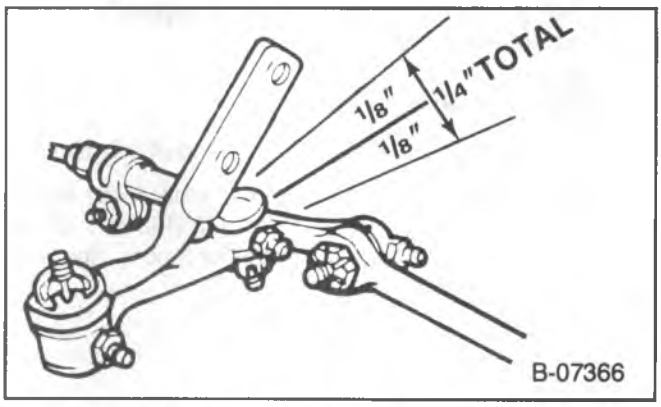

Figure 3—Checking Idler Arm Movement

IDLER ARM REPLACEMENT

Important

- Do not attempt to free the ball stud by using a pickle fork or wedge-type tool, because seal or bushing damage could result (figure 4). Use the proper tool to separate all ball joints.

Remove or Disconnect (Figures 1 and 2)

Tool Required:

J 24319-01 Universal Steering Linkage Puller.

- Raise the vehicle.

1. Idler arm assembly from the frame or support assembly.
2. Nut from the idler arm ball stud.
3. Idler arm (1) from the relay rod (2). Use J 24319-01 (figure 5).

Inspect

- Ball stud threads for damage.
- Ball stud seal for cuts or other damage.

Clean

- Threads on the ball stud and in the ball stud nut.

Install or Connect (Figures 1 and 2)

NOTICE: For steps 1 and 3 see "Notice" on page 3B3-1 of this section.

Tools Required:

J 29193 Steering Linkage Installer (12 mm).
J 29194 Steering Linkage Installer (14 mm).

1. Idler arm assembly (1 and 16) or support assembly (10) to the frame.

   Tighten

   - Bolts to "Specifications" at the end of this section.

2. Relay rod (2) to the idler arm ball stud. Make certain the seal is on the stud. Tighten J 29193 or J 29194 to 54 N•m (40 ft. lbs.) to seat the tapers (figure 6). Remove the tool.

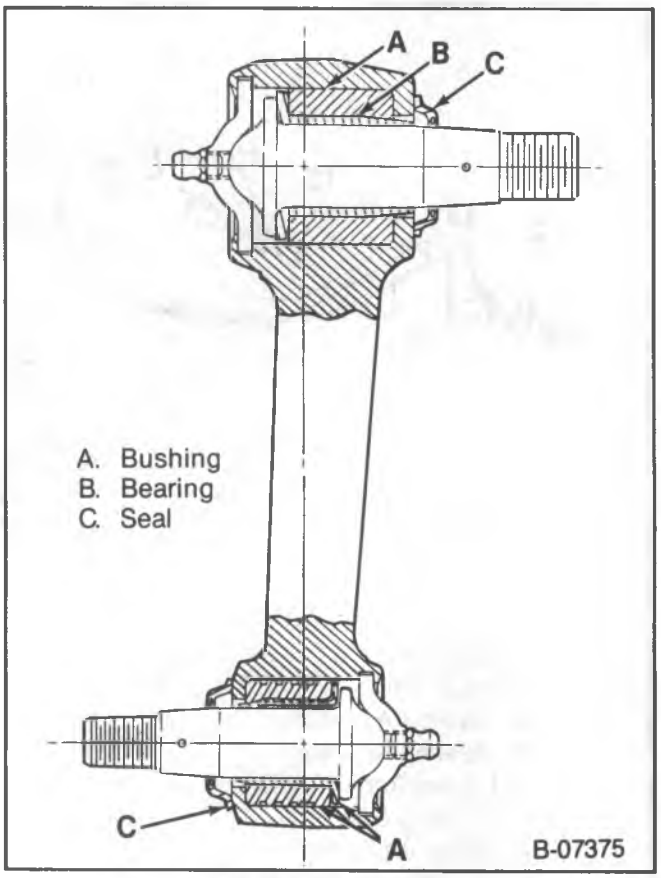

Figure 4—Idler Arm

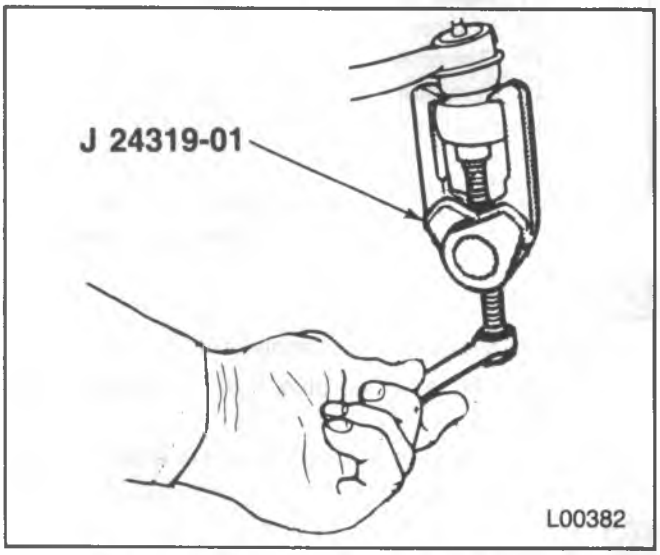

Figure 5—Separating Steering Linkage

3. Prevailing torque nut to the idler arm ball stud.

Tighten

- Nut to "Specifications" at the end of this section.

- Lower the vehicle.

Adjust

Toe-in if necessary. Refer to FRONT END ALIGNMENT (SEC. 3A).

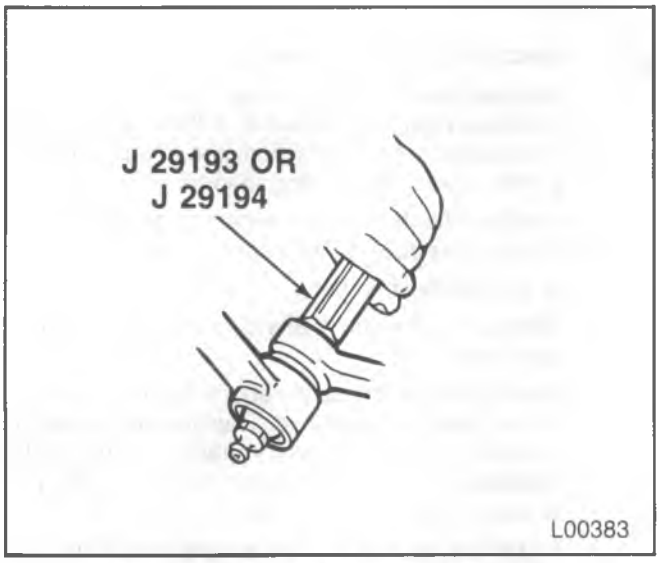

Figure 6—Seating Ball Stud Tapers

RELAY ROD REPLACEMENT

Important

- Do not attempt to free the ball stud by using a pickle fork or wedge-type tool, because seal or bushing damage could result (figure 4). Use the proper tool to separate all ball joints.

Remove or Disconnect (Figures 1 and 2)

Tool Required:

J 24319-01 Universal Steering Linkage Puller.

- Raise the vehicle.

1. Inner tie rod (3) from the relay rod (2). Refer to "Tie Rod Replacement" in this section.
2. Nuts from the idler arm (1) and pitman arm (5) or relay arm (11) ball studs at the relay rod (2).
3. Relay rod (2) from the idler arm (1). Use J 24319-01 (figure 5).
4. Relay rod (2) from the pitman arm (5) or relay arm (11). Use J 24319-01 (figure 5).

Inspect

- Threads on the tie rod and the tie rod end for damage.
- Ball stud threads for damage.
- Ball stud seals for excessive wear.

Clean

- Threads on the ball stud and the ball stud nut.

Install or Connect (Figures 1 and 2)

Tools Required:

J 29193 Steering Linkage Installer (12 mm).

J 29194 Steering Linkage Installer (14 mm).

1. Relay rod (2) to the idler arm (1).
2. Relay rod to the pitman arm (5) or relay arm (11) ball stud. Make certain the seal is on the stud. Tighten J 29193 or J 29194 to 54 N•m (40 ft. lbs.) to seat the tapers (figure 6). Remove the tool.

NOTICE: See "Notice" on page 3B1-1 of this section.

3. Nuts to the idler arm (1) and the pitman arm (5) or relay arm (11) ball stud.

Tighten

- Nuts to "Specifications" at the end of this section.

4. Inner tie rod (3) to the relay rod (2). Refer to "Tie Rod Replacement" in this section.

- Lower the vehicle.

PITMAN ARM REPLACEMENT

Important

- Do not attempt to free the ball stud by using a pickle fork or wedge-type tool, because seal or bushing damage could result (figure 4). Use the proper tool to separate all ball joints.

Remove or Disconnect (Figures 1, 2, 7, and 8)

Tools Required:

J 24319-01 Universal Steering Linkage Puller.

J 29107 Pitman Arm Puller.

J 6632-01 Pitman Arm Puller.

- Raise the vehicle.

1. Relay rod nut or connecting rod castellated nut and cotter pin from the pitman arm ball stud.
2. Relay rod (2) or connecting rod (8) from the pitman arm (5). Use J 24319-01 (figure 5).
3. Pitman arm nut and washer.

- Mark the pitman arms and the pitman shaft. This will permit proper alignment at assembly.

NOTICE: Do not hammer on pitman arm, pitman shaft, or puller. Damage to pitman arm or steering gear may result.

4. Pitman arm (5). Use J 6632-01 or J 29107 (figure 9).

Inspect

- Ball stud threads for damage.
- Ball stud seals for excessive wear.

Clean

- Threads on the ball stud and ball stud nut.

Install or Connect (Figures 1, 2, 7 and 8)

NOTICE: For steps 2 and 4 see "Notice" on page 3B3-1 of this section.

Tools Required:

J 29193 Steering Linkage Installer (12 mm).

J 29194 Steering Linkage installer (14 mm).

NOTICE: If a clamp-type pitman arm is used, spread the pitman arm just enough, with a wedge, to slip the arm onto the pitman shaft. Do not spread the pitman arm more than required to slip over the pitman shaft with hand pressure. Do not hammer. Damage to the steering gear may result.

1. Pitman arm (5) on the pitman shaft. Line up the marks made at removal.
2. Pitman arm washer and nut.

   Tighten

   - Pitman arm nut to "Specifications" at the end of this section.
3. Relay rod (2) or connecting rod (8) to the pitman arm ball stud. Make certain the seal is on the stud. Tighten J 29193 or J 29194 (figure 6) to 54 N•m (40 ft. lbs.) to seat the tapers. Remove the tool.
4. Relay rod nut or the connecting rod castellated nut and cotter pin to the pitman arm ball stud.

   Tighten

   - Castellated nut to "Specifications" as instructed at the end of this section.
- Lower the vehicle.

STEERING SHOCK ABSORBER INSPECTION

Steering shock absorbers are sealed assembly and are non-repairable. Replace the complete assembly if damaged.

Inspect (Figures 2, 7 and 8)

1. Shock absorber for fluid leakage. A slight film of fluid is allowable near the shaft seal. If there is excessive fluid leakage, be sure it's from the shock absorber and then replace the shock absorber.
2. Shock absorber bushing for excessive wear. Replace the shock absorber if necessary.
3. Test the shock absorber.
   - Disconnect the shock absorber from the frame or axle end.
   - Extend and compress the shock absorber using as much travel as possible. Resistance should be smooth and constant for each stroking rate. Replace the shock absorber if any binding or unusual noises are present.
   - Install the end of the shock absorber. Torque to "Specifications" at the end of this section.

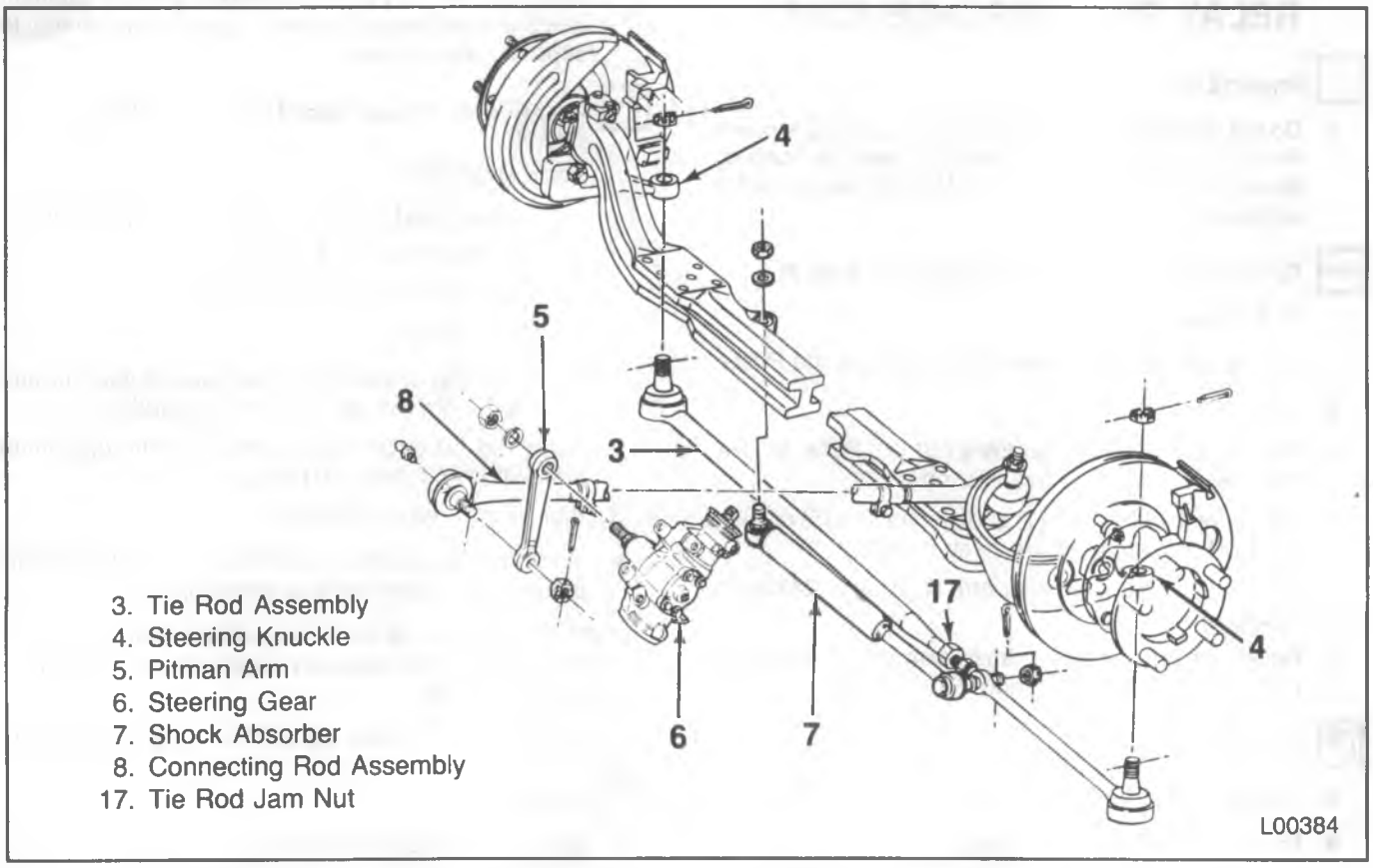

Figure 7 — Steering Linkage — P-Models with I-Beam Axle Assembly and 19.5-Inch Diameter Wheel

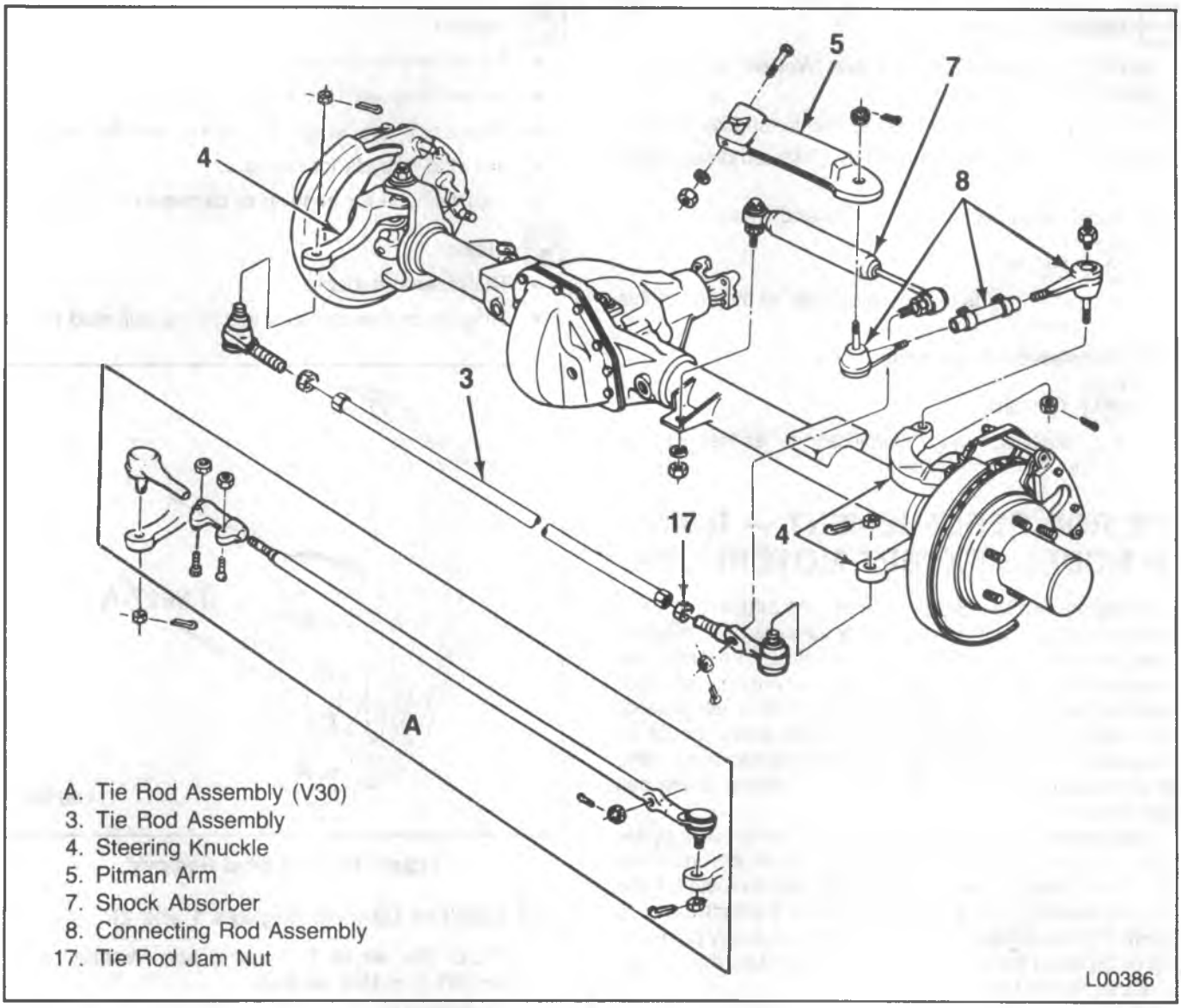

Figure 8—Steering Linkage — V-Models

STEERING SHOCK ABSORBER REPLACEMENT

Remove or Disconnect (Figures 2, 7, and 8)

1. Shock absorber mounting nuts and washers.
2. Washer (12) and grommet (13) (P3 Motorhome) (figure 2).
3. Cotter pin and castellated nut.
4. Shock absorber (7).

Inspect

- Shock absorber (7) for leaks and damage.
- Shock absorber (7) bushings for wear and damage.
- Grommet (13) for wear.

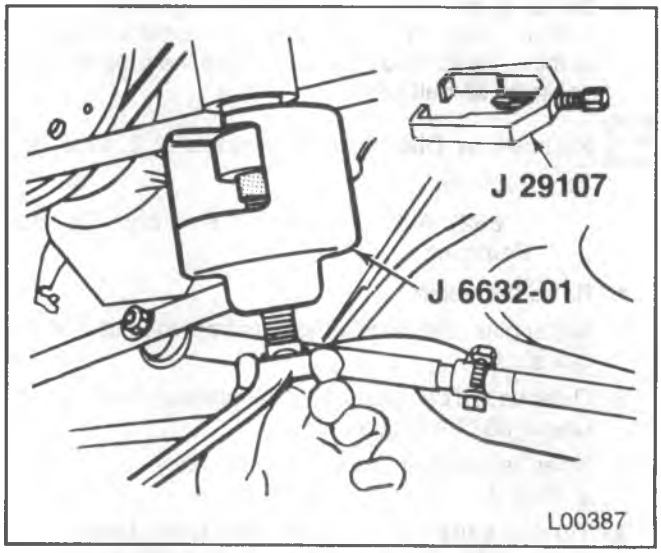

Figure 9—Removing the Pitman Arm

Install or Connect

NOTICE: For steps 3 and 4 see "Notice" on page 3B3-1 of this section.

1. Shock absorber (7) with bushings to the axle bracket.
2. Washer (12) and grommet (13) (P Motorhome) (figure 3).
3. Shock absorber mounting nuts and washers.

   Tighten

   - Mounting nuts to "Specifications" at the end of this section.
4. Castellated nut and cotter pin.

   Tighten

   - Castellated nut to "Specifications" as instructed at the end of this section.

TIE ROD REPLACEMENT — R AND P MODELS EXCEPT MOTORHOME

There are two tie rod assemblies, one attached to each end of the relay rod. Each assembly consists of an adjuster tube, two clamps and two tie rod ends. The ends are threaded into the sleeve and secured with the clamps. Right and left hand threads are used for toe-in adjustments and steering gear centering. The tie rod ends should be replaced when excessive up-and-down motion is present, or when excessive end play or loss of motion at the ball stud exists.

Before servicing, note the position of the tie rod adjuster tube and the direction from which the bolts are installed. The tie rod adjuster tube components may be rusted. If the torque required to remove the nut from the bolt exceeds 9 N•m (7 ft. lbs.) discard the nuts and bolts. Apply penetrating oil between the clamp and tube and rotate the clamps until they move freely.

Important

- Do not attempt to free the ball stud by using a pickle fork or wedge-type tool, because seal or bushing damage could result (figure 4). Use the proper tool to separate all ball joints.

Remove or Disconnect (Figures 1, 2, and 10)

Tool Required:

J 6627-A Wheel Stud Puller and Tie Rod Remover.

- Raise the vehicle.

1. Cotter pins and castellated nuts from the outer tie rod ball studs.
2. Outer tie rod ball studs from the steering knuckles (4). Use J 6627-A (figure 10).
3. Inner tie rod ball studs from the relay rod (2). Use J 6627-A.
4. Tie rod ends from the adjuster tube. Loosen the clamp bolts and unscrew the end assemblies.

Inspect

- Tie rod end for damage.
- Tie rod end seals for excessive wear.
- Threads on the tie rod and tie rod end for damage.
- Ball stud threads for damage.
- Adjuster tube for bending or damaged threads.

Clean

- The tapered surfaces.
- Threads on the ball stud and in the ball stud nut.

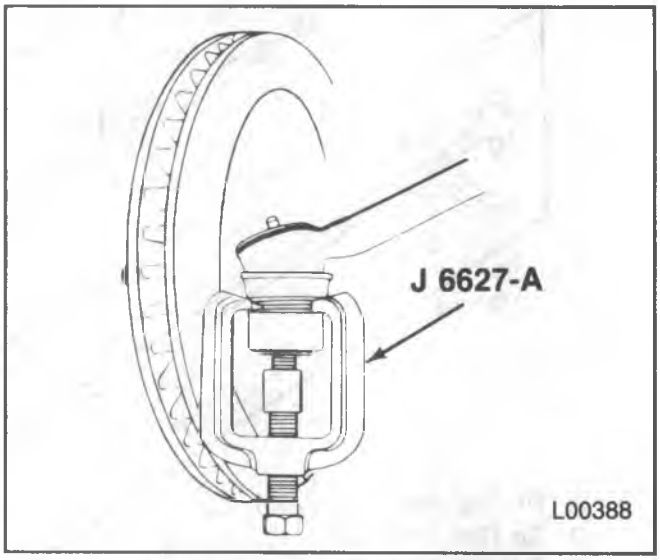

Figure 10—Ball Stud Removal

Install or Connect (Figures 1 and 2)

NOTICE: For steps 3, 5 and 6 see "Notice" on page 3B3-1 of this section.

Tools Required:

J 29193 Steering Linkage Installer (12 mm).

J 29194 Steering Linkage Installer (14 mm).

- If the rod ends were removed, lubricate the tie rod threads with chassis lubricant. Refer to MAINTENANCE AND LUBRICATION (SEC. 0B).

1. Tie rod ends to the adjuster tube. The number of threads on both the inner and outer rod ends must be equal within three threads.
2. Inner tie rod ball studs to the relay rod (2). The seal must be on the stud. Tighten J 29193 or J 29194 to 54 N•m (40 ft. lbs.) to seat the tapers (figure 6). Remove the tool.
3. Prevailing torque nut to the inner tie rod ball stud.

   Tighten

   - Nut to "Specifications" at the end of this section.
4. Outer tie rod ball studs to the steering knuckle.
5. Castellated nuts and cotter pins to the outer tie rod ball studs.

Tighten

- Castellated nuts to "Specifications" as instructed at the end of this section.

Adjust (Figures 11 and 12)

- Toe-in. Refer to FRONT END ALIGNMENT (SEC. 3A).

6. Adjuster tube clamp bolts (figures 11 and 12). Before tightening the clamp bolts, be sure the following conditions have been met:
   - The clamp must be positioned between the locating dimples at either end of the adjuster tube.
   - The clamps must be positioned within the angular travel shown in figures 11 and 12.
   - Both inner and outer tie rod ends must rotate for their full travel. The position of each tie rod end must be maintained while the clamps are tightened to ensure free movement of each joint.
   - The clamp ends may touch when the nuts are torqued to specification, but the gap next to the adjuster tube must NOT be less than the minimum dimension shown in figures 11 and 12.

Tighten

- Adjuster tube clamp bolts to "Specifications" at the end of this section.

TIE ROD REPLACEMENT — V AND P3 FS3 MODELS

Important

- Do not attempt to free the ball stud by using a pickle fork or wedge-type tool, because seal or bushing damage could result (figure 4). Use the proper tool to separate all ball joints.

Remove or Disconnect (Figures 7 and 8)

Tool Required:

J 6627-A Wheel Stud Puller and Tie Rod Remover.

1. Cotter pins and castellated nuts from the tie rod assembly (3).
2. Shock absorber (7) from the tie rod assembly (3).
3. The outer tie rod ball studs from the steering knuckles (4). Use J 6627-A (figure 10).
4. Tie rod end bodies. Count the number of turns needed to remove the tie rod end bodies.
5. Tie rod ends from the adjuster tube. On V3 models, note the position of the adjuster tube, and the direction from which the bolts are installed.

Inspect

- Tie rod for bending or damaged threads.
- Tie rod end seals for wear.
- Ball stud threads for damage.
- Adjuster tube for bending or damaged threads (V3).

Clean

- The tapered surfaces.
- Threads on the ball stud and in the ball stud nut.

Install or Connect (Figures 7 and 8)

- If the tie rod ends were removed, lubricate the tie rod threads with chassis lubricant. Refer to MAINTENANCE AND LUBRICATION (SEC. 0B).

1. Tie rod end bodies to the tie rod (3) (if removed). Thread the rod assembly (3) on with the same number of turns used during removal.

- Tie rod ends to the adjuster tube (V3).

2. Outer tie rod ball studs to the steering knuckle (4).
3. Shock absorber (7) to the tie rod assembly (3).

NOTICE: See "Notice" on page 3B3-1 of this section.

4. Castellated nuts and cotter pins to the tie rod assembly (3).

Tighten

- Castellated nuts to "Specifications" as instructed at the end of this section.

Adjust

- Toe-in. Refer to FRONT END ALIGNMENT (SEC. 3A).

Tighten

- Jam nuts (17) at the tie rod end bodies to "Specifications" at the end of this section.
- Adjuster tube clamp bolts to "Specifications" at the end of this section (V3).

CONNECTING ROD REPLACEMENT — V AND P3 FS3 MODELS

The adjustable connecting rod is used for centering the steering gear with the front axle. Replace the connecting rod if the rod is bent or if the ball stud is loose.

Important

- Do not attempt to free the ball stud by using a pickle fork or wedge-type tool, because seal or bushing damage could result (figure 4). Use the proper tool to separate all ball joints.

Remove or Disconnect (Figures 7 and 8)

Tool Required:

J 24319-01 Universal Steering Linkage Puller.

- Raise the vehicle.

1. Castellated nuts and cotter pins from the connecting rod (8).
2. Connecting rod (8) from the pitman arm (5). Use J 24319-01 (figure 5).
3. Connecting rod (8) from the steering knuckle (4). Use J 24319-01 (figure 5).

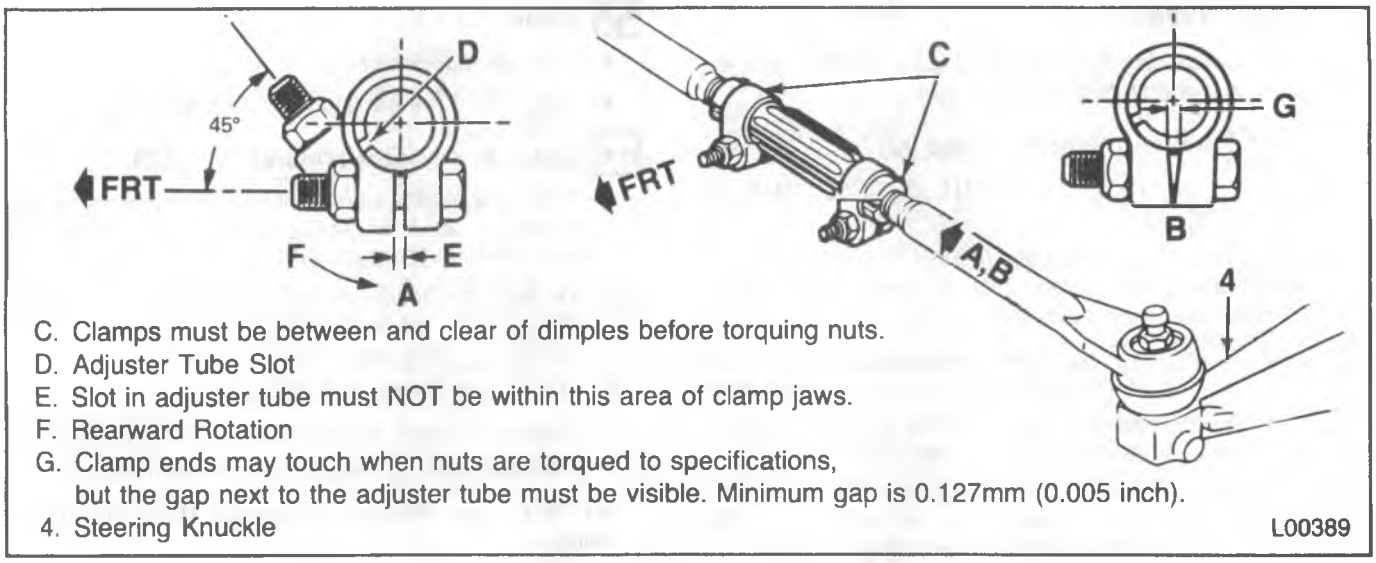

Figure 11 — Tie Rod Clamp and Adjuster Tube Positioning — R-Models

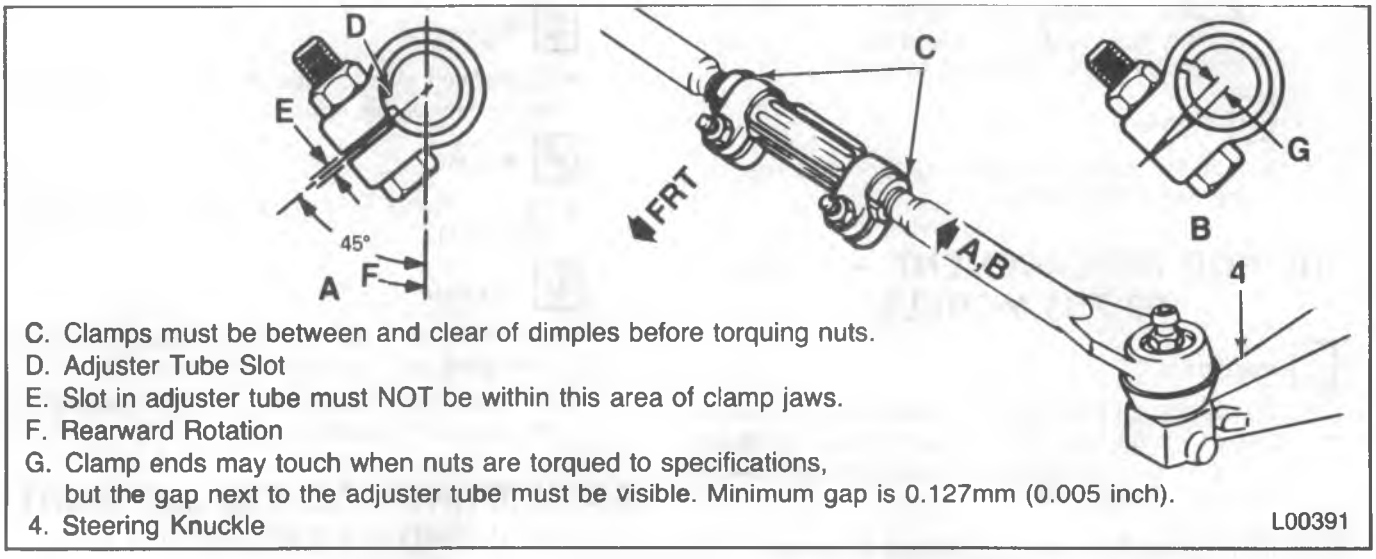

Figure 12 — Tie Rod Clamp and Adjuster Tube Positioning — P-Models, Excluding FS3

Important

- Before removing the connecting rod adjuster tube, note the position of the tube and the direction from which the bolts are installed.

4. Connecting rod ends from the adjuster tube. Loosen the clamp bolts and unscrew the end assemblies.
   - The connecting rod adjuster tube components may be rusted. If the torque required to remove the nut from the bolt exceeds 9 N•m (7 ft. lbs.) discard the nuts and bolts.
   - Apply penetrating oil between the clamps and the tube. Rotate the clamps until they move freely.

Inspect

- Ball stud threads for damage.
- Ball stud seals for wear.
- Adjuster tube for bending or damaged threads.

Clean

- Threads on the ball stud and ball stud nut.

Install or Connect (Figures 7, 8, 13 and 14)

NOTICE: For steps 3, 5 and 6 see "Notice" on page 3B3-1 of this section.

- If the connecting rod ends were removed, lubricate the connecting rod threads with chassis lubricant. Refer to MAINTENANCE AND LUBRICATION (SEC 0B).

1. Connecting rod ends to the adjuster tube. The number of threads on both the inner and outer connecting rod ends must be equal within three threads.
2. Inner connecting rod (8) ball stud to the pitman arm (5) (on V-models install the short end). Make certain the seal is on the stud.
3. Castellated nut and cotter pin to the inner connecting rod ball stud.

Tighten

- Castellated nut to "Specifications" are instructed at the end of this section.

4. Outer connecting rod ball stud to the steering knuckle (4).
5. Castellated nut and cotter pin to the outer connecting rod ball stud.

Tighten

- Castellated nut to "Specifications" as instructed at the end of this section.

- The connecting rod ends to the pitman arm (5) and steering knuckle (4) must be in correct relationship to each other after adjustment within ± 2 degrees (V-model).

Adjust

- Steering gear high point centering. Refer to POWER STEERING (SEC. 3B1).

6. Adjuster tube clamp bolts (figures 13 and 14). Before tightening the clamp bolts, be sure the following conditions have been met:
   - The clamps must be positioned between the locating dimples at either end of the adjuster tube.
   - The clamps must be positioned within the angular travel shown in figures 13 and 14.
   - The clamp ends may touch when the nuts are torqued to specification, but the gap adjacent to the adjuster tube must NOT be less than the minimum dimension shown in figures 13 and 14.
   - Both inner and outer connecting rod ends must rotate for their full travel. The position of each connecting rod end must be maintained as the clamps are tightened, to ensure free movement of each joint.

Tighten

- Adjuster tube bolts to "Specifications" at the end of this section.

- Lower the vehicle.

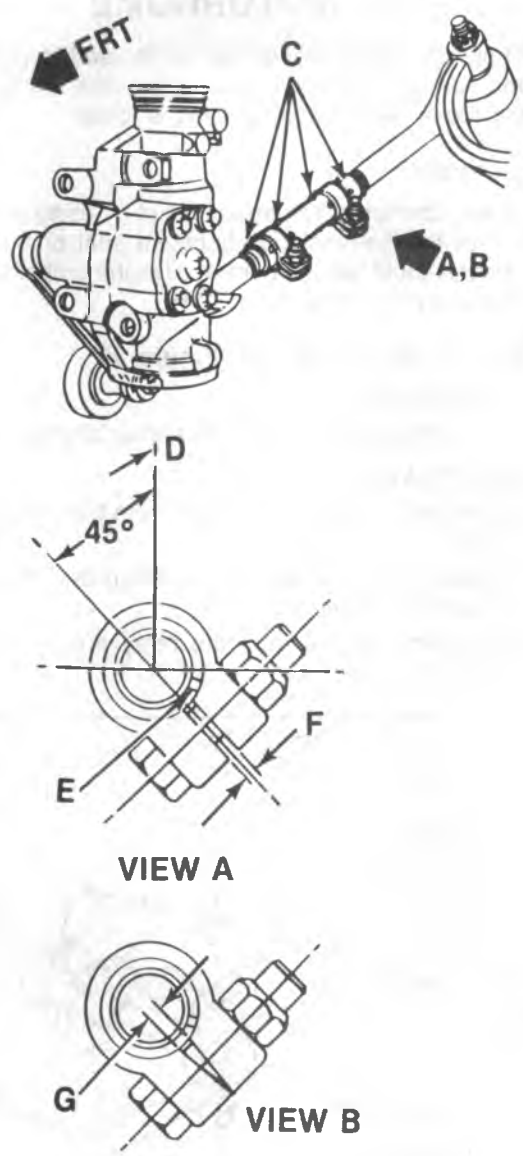

C. Clamps must be between and clear of dimples before torquing nuts.
D. Outboard Rotation
E. Adjuster Tube Slot
F. Slot in adjuster tube must not be within this area of clamp jaws.
G. Clamp ends may touch when nuts are torqued to specifications. But the gap next to the adjuster tube must be visible. Minimum gap is 0.127 mm (0.005-inch).

B-07293

Figure 13 — Connecting Rod Clamp and Adjuster Tube Positioning — P3 FS3

CONNECTING ROD REPLACEMENT — P3 MOTORHOME

The non-adjustable connecting rod is used to connect the pitman arm to the relay arm. Replace the connecting rod if the rod is bent or the ball stud is loose.

Important

- Do not attempt to free the ball stud by using a pickle fork or wedge-type tool, because seal or bushing damage could result (figure 4). Use the proper tool to separate all ball joints.

Remove or Disconnect (Figure 2)

Tool Required:

J 24319-01 Universal Steering Linkage Puller

- Raise the vehicle.

1. Castellated nuts and cotter pins from the connecting rod (8).
2. Connecting rod (8) from the pitman arm (5). Use J 24319-01 (figure 5).
3. Connecting rod (8) from the relay arm (11). Use J 24319-01 (figure 5).

Inspect

- Ball stud threads for damage.
- Ball stud seals for excessive wear.

Clean

- Threads on the ball stud and ball stud nut.

Install or Connect (Figure 2)

1. Connecting rod (8) to the pitman arm (5) and relay arm (11).
2. Castellated nuts and cotter pins to the connecting rod (8).

Tighten

- Castellated nuts to "Specifications" as instructed at the end of this section.

- Lower the vehicle.

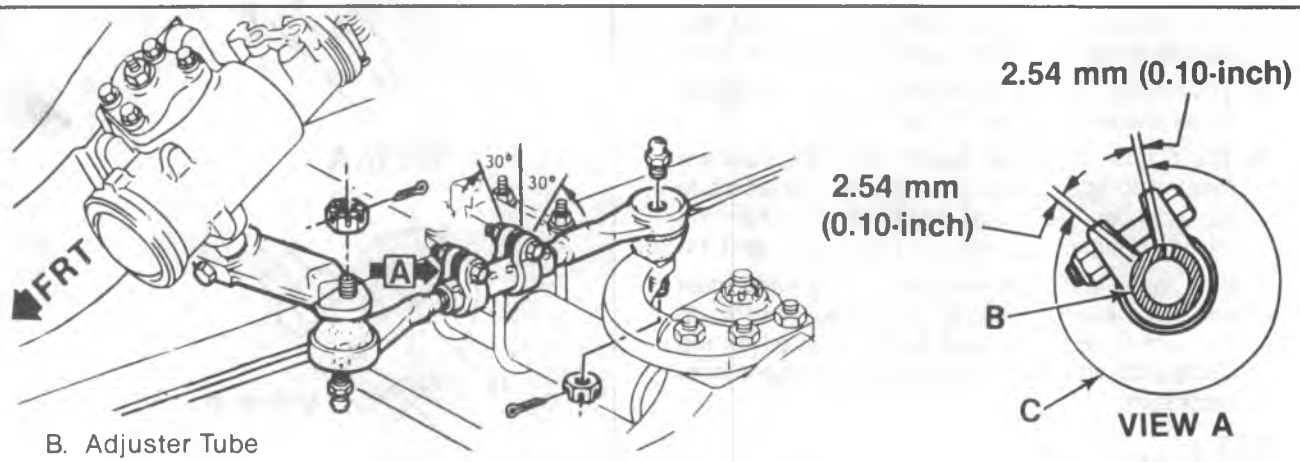

B. Adjuster Tube
C. Slot Of Adjuster Tube May Be In Any Position On Arc Shown But Not Closer Than 2.54 mm (0.10 Inch) To The Edge Of Clamp Jaws Or Between.

B-07294

Figure 14 — Connecting Rod Clamp and Adjuster Tube Positioning — V-Models

SPECIFICATIONS

	R-Model		G-Model		P20 and 30 (42)		P30(32) Motorhome		P30(00)FS3		V-Model	
	N·m	Ft. Lbs.	N·m	Ft. Lbs.	N·m	Ft. Lbs.	N·m	Ft. Lbs.	N·m	Ft. Lbs.	N·m	Ft. Lbs.
Tie Rod (3) End To Steering Knuckle (4)*	62	46	62	46	62	46	62	46	220	162	55	40
Tie Rod (3) Adjuster Tube Bolts	19	14	19	14	19	14	19	14	—	—	55	40
Tie Rod (3) To Relay Rod (2)	90	66	90	66	90	66	90	66	—	—	—	—
Idler Arm (1) To Relay Rod (2)	90	66	90	66	90	66	90	66	—	—	—	—
Idler Arm Frame Support (16) To Frame	40	30	47	35	40	30	—	—	—	—	—	—
Pitman Arm (5) To Relay Rod (2)	90	66	90	66	90	66	—	—	—	—	—	—
Pitman Arm (5) To Steering Gear (6)	250	184	250	184	250	184	170	125	170	125	125	92
Bolt To Shock Absorber Bracket (9)	—	—	89	66	—	—	—	—	—	—	—	—
Shock Absorber (7) To Tie Rod (3)*	—	—	62	46	—	—	—	—	62	46	62	46
Shock Absorber (7) To Frame	—	—	62	46	—	—	11	8	47	35	110	81
Shock Absorber (7) To Idler Arm (1)*	—	—	—	—	—	—	62	46	—	—	—	—
Connecting Rod (8) To Adjuster Tube Bolts	—	—	—	—	—	—	—	—	68	50	54	40
Connecting Rod (8) To Pitman Arm (5)*	—	—	—	—	—	—	95	70	95	70	120	89
Connecting Rod (8) To Steering Knuckle (4)*	—	—	—	—	—	—	—	—	95	70	120	89
Connecting Rod (8) To Relay Arm (11)*	—	—	—	—	—	—	95	70	—	—	—	—
Support Assemblies (10) To Frame	—	—	—	—	—	—	65	48	—	—	—	—
Idler Arm (1) And Relay Arm (11) To Support Assemblies (10)	—	—	—	—	—	—	170	125	—	—	—	—
Relay Rod (2) To Relay Arm (11)	—	—	—	—	—	—	90	66	—	—	—	—
Tie Rod Jam Nut (17) (V10, 20) & P30(00)FS3	—	—	—	—	—	—	—	—	375	277	237	175

*Tightening Procedure (Castellated Nuts)
1. Tighten to the specified torque.
2. Advance the nut to align the nut slot with the cotter pin hole. Never back the nut off to align the cotter pin hole.
3. Insert a new cotter pin of the correct size.

GMTB-3062-2A

SPECIAL TOOLS

1. J 6627-A

2. J 6632-01

3. 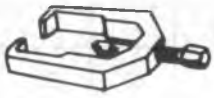 J 29107

4. J 24319-01

5. J 29193

6. J 29194

1. Tie Rod Puller/Wheel Stud Remover
2. Pitman Arm Puller
3. Pitman Arm Puller
4. Universal Steering Linkage Puller
5. Steering Linkage Installer (12 mm) GM Torque Prevailing Nuts
6. Steering Linkage Installer (14 mm) GM Torque Prevailing Nuts

L00392

SECTION 3C

FRONT SUSPENSION AND AXLE

NOTICE: When fasteners are removed, always reinstall them at the same location from which they were removed. If a fastener needs to be replaced, use the correct part number fastener for that application. If the correct part number fastener is not available, a fastener of equal size and strength (or stronger) may be used. Fasteners that are not reused and those requiring thread locking compound will be called out. The correct torque value must be used when installing fasteners that require it. If the above conditions are not followed, parts or system damage could result.

CONTENTS

SUBJECT	PAGE
Description	3C- 2
Diagnosis	3C- 3
Shock Absorber Bench Test	3C- 4
Front Wheel Bearings	3C- 4
Independent Front Suspension On-Vehicle Service	3C- 9
Shock Absorber Replacement	3C- 9
Stabilizer Shaft Replacement	3C- 9
Wheel Hub/Rotor Assembly Replacement	3C-10
Wheel Bearing Adjustment	3C-15
Wheel Hub Bolt Replacement	3C-16
Steering Knuckle Replacement	3C-17
Coil Spring Replacement	3C-18
Air Cylinder Inspection	3C-19
Lower Ball Joint Replacement	3C-19
Upper Ball Joint Replacement	3C-21
Upper & Lower Control Arm Pivot Shaft and Bushing Replacement	3C-22
Lower Control Arm Replacement	3C-25
Upper Control Arm Replacement	3C-26
Suspension Unit Replacement	3C-26
On-Vehicle Service: I-Beam (RPO FS3) Front Suspension	3C-29
Shock Absorber Replacement	3C-29
Stabilizer Shaft Replacement	3C-31
Wheel Hub/Rotor Assembly Replacement	3C-32
Wheel Bearing Adjustment	3C-34
Wheel Hub Bolt Replacement	3C-35
Steering Arm, Knuckle and Spindle Replacement	3C-35
Front Axle Replacement	3C-36
Leaf Spring Replacement	3C-37
On-Vehicle Service: Four Wheel Drive Front Suspension	3C-38
Shock Absorber Replacement	3C-38
Stabilizer Shaft Replacement	3C-38
Wheel Hub/Rotor Assembly Replacement	3C-39
Bearing Adjustment	3C-46
Wheel Hub Bolt Replacement	3C-47
Spindle Replacement	3C-48
Steering Knuckle and Arm Replacement	3C-49
Checking Bali Joint Turning Effort	3C-53
Ball Joint Replacement (V1 & V2 Models Only)	3C-53
Leaf Spring and Bushing Replacement	3C-55
Specifications	3C-57
Special Tools	3C-59

DESCRIPTION

An independent suspension is standard on the R and P Model vehicles. This suspension features unequal length control arms (the lower control arm is the load carrying member), coil springs and shock absorbers to reduce vibration and shock load, plus a stabilizer bar to control sway or roll. Air cylinders inside coil springs are available to minimize "crash through" on large road bumps. A special heavy-duty front suspension is available on P-Model vehicles. This suspension (RPO FS3), centered around a solid I-beam axle, includes leaf springs, shock absorbers and a stabilizer bar.

The V Model (four wheel drive) suspension includes leaf springs, shock absorbers and a stabilizer shaft.

DIAGNOSIS

Problem	Possible Cause	Correction
Hard Steering	1. Ball joints and steering linkage need lubrication. 2. Low or uneven front tire pressure. 3. Incorrect front wheel alignment (manual steering).	1. Lubricate the ball joints and linkage. 2. Inflate tires to the recommended pressure. 3. Check and align the front suspension.
Poor Directional Stability	1. Ball joints and steering linkage need lubrication. 2. Low or uneven front or rear tire pressure. 3. Loose wheel bearings. 4. Incorrect front wheel alignment (caster). 5. Broken springs. 6. Malfunctioning shock absorber. 7. Broken stabilizer bar or a missing link.	1. Lubricate the ball joints and linkage. 2. Inflate tires to the recommended pressure. 3. Adjust the wheel bearings. 4. Check and align the front suspension. 5. Replace the springs. 6. Replace the shock absorber. 7. Replace the stabilizer bar or link.
Front Wheel Shimmy (Smooth Road Shake)	1. Tire and wheel are out of balance or out of round. 2. Worn or loose wheel bearings. 3. Worn ball joints. 4. Malfunctioning shock absorber.	1. Balance the tires, check run-out. 2. Adjust the wheel bearings. 3. Replace the ball joints. 4. Check and replace the shock absorber.
Vehicle Pulls to One Side (No Braking Action)	1. Low or uneven tire pressure. 2. Front or rear brakes dragging. 3. Broken or sagging front spring. 4. Incorrect front wheel alignment (camber).	1. Inflate the tires to the recommended pressure. 2. Adjust the brakes. 3. Replace the spring. 4. Check and align the front suspension.
Noise in the Front End	1. Ball joints and steering linkage need lubrication. 2. Loose shock absorber or worn bushings. 3. Worn control arm bushings. 4. Worn or loose wheel bearings. 5. Loose stabilizer bar. 6. Loose wheel nuts. 7. Spring is improperly positioned. 8. Loose suspension bolts.	1. Lubricate at the recommended intervals. 2. Tighten the bolts or replace the shock absorber. 3. Replace the bushings. 4. Adjust or replace the wheel bearings. 5. Tighten all the stabilizer bar attachments. 6. Tighten the wheel nuts. 7. Reposition the spring. 8. Tighten to specifications or replace.
Wheel Tramp	1. Tire and the wheel are out of balance. 2. Tire and the wheel are out of round. 3. Blister or bump on the tire. 4. Improper shock absorber action.	1. Balance the wheels. 2. Replace the tire. 3. Replace the tire. 4. Replace the shock absorber.
Excessive or Uneven Tire Wear	1. Underinflated or overinflated tires. 2. Improper toe-in. 3. Wheels are out of balance. 4. Hard driving. 5. Overloading the vehicle.	1. Inflate the tire to the recommended pressure. 2. Adjust toe-in setting. 3. Balance the wheels. 4. Follow proper driving techniques. 5. Do not exceed the maximum recommended payload rating.
Scuffed Tires	1. Toe-in is incorrect. 2. Excessive speed on turns. 3. Tires are improperly inflated. 4. Suspension arm is bent or twisted.	1. Adjust toe-in setting. 2. Follow proper driving techniques. 3. Inflate the tires to the recommended pressure. 4. Replace the suspension arm.
Cupped Tires	1. Front shock absorbers are defective. 2. Worn ball joints. 3. Wheel bearings are incorrectly adjusted or worn. 4. Wheel and tire is out of balance. 5. Excessive tire or wheel runout.	1. Replace the shock absorbers. 2. Replace the ball joints. 3. Adjust or replace the wheel bearings (also replace the races). 4. Balance the wheel and tire. 5. Check and compensate for runout.

GMTB-0843-2L

SHOCK ABSORBER BENCH TEST

SPIRAL GROOVE SHOCK ABSORBERS

Remove shock absorber. Refer to the appropriate "Shock Absorber Replacement" procedures later in this section.

2. Purge the air from the pressure chamber.
   - Extend the shock vertically – top end up.
   - Turn the shock over and collapse it vertically – top end down.
   - Repeat the above step five times.
3. Place the shock absorber in a vise with the jaws clamped onto the shock's bottom mount.
   - Shock absorber should be positioned vertically in the vise – top end up.
   - Do not clamp the vise jaws on the shock's reservoir tube.
4. Pump the shock absorber at various rates of speed and observe the rebound force.
   - Rebound force is normally stronger than the compression force (approximately two to one).
   - Rebound force should be smooth and constant for each stroke rate.
5. Compare with a good shock absorber.
6. If one of the following are observed, replace the shock absorber.
   - A skip or lag at reversal near mid-stroke.
   - A seize (except at the extreme ends of travel).
   - A noise (grunt or squeal) after completing one full stroke in both directions.
   - A clicking noise at fast reversal.

NON-SPIRAL GROOVE SHOCK ABSORBERS

1. Remove shock absorber. Refer to the appropriate "Shock Absorber Replacement" procedures later in this section.

- Purging air from non-spiral groove shock absorbers is not necessary. The shock absorbers have a gas-filled cell in their reservoirs (as opposed to the air-filled cell in the spiral groove shock absorber reservoirs).

2. Place the shock absorber in a vise with the jaws clamped on the shock absorber's top mount.
   - Shock absorber should be held vertically in the vise with its bottom end up.
   - Do not clamp the vise jaws on the shock's reservoir tube.
3. Pump the shock absorber at various rates of speed and observe the rebound force.
   - Rebound force is normally stronger than the compression force (approximately two to one).
   - Rebound force should be smooth and constant for each stroke rate.
4. Compare with a good shock absorber.
5. If one of the following are observed, replace the shock absorber.
   - A skip or lag at reversal near mid-stroke.
   - A seize (except at the extreme ends of travel).
   - A noise (grunt or squeal) after completing one full stroke in both directions.
   - A clicking noise at fast reversal.

FRONT WHEEL BEARINGS

When diagnosing wheel bearing condition, keep in mind the general condition of all parts during disassembly and inspection. Use Figures 1 through 4 to classify the failure, and follow the recommended repair procedures.

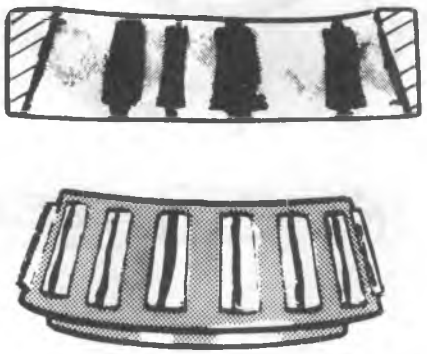

ABRASIVE ROLLER WEAR

Pattern on races and rollers caused by fine abrasives. Clean all parts and housings, check seals and bearings and replace if leaking, rough or noisy.

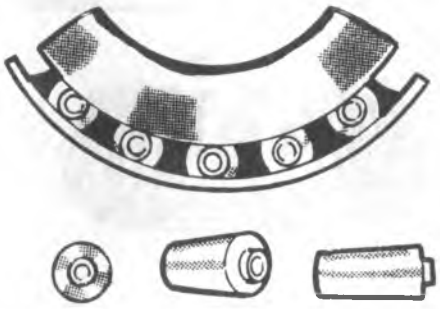

ABRASIVE STEP WEAR

Pattern on roller ends caused by fine abrasives. Clean all parts and housings, check seals and bearings and replace if leaking, rough or noisy.

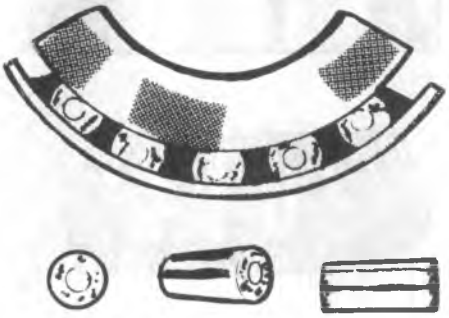

GALLING

Metal smears on roller ends due to overheat, lubricant failure or overload. Replace bearing, check seals and check for proper lubrication.

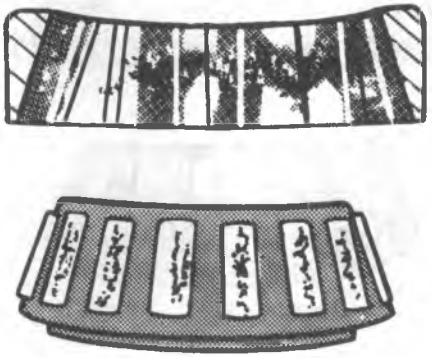

ETCHING

Bearing surfaces appear gray or grayish black in color with related etching away of material usually at roller spacing. Replace bearings, check seals and check for proper lubrication.

L00561

Figure 1 – Diagnosis of Front Wheel Bearings

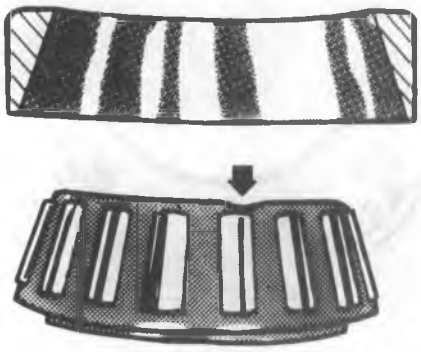

BENT CAGE

Cage damaged due to improper handling or tool usage.
Replace bearing.

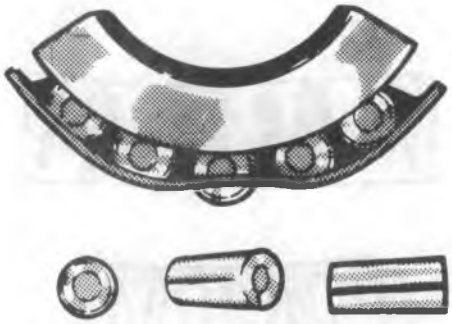

BENT CAGE

Cage damaged due to improper handling or tool usage.
Replace bearing.

CAGE WEAR

Wear around outside diameter of cage and roller pockets caused by abrasive material and inefficient lubrication.
Clean related parts and housings.
Check seals and replace bearings.

INDENTATIONS

Surface depressions on race and rollers caused by hard particles of foreign material.
Clean all parts and housings. Check seals and replace bearings if rough or noisy.

B-09195

Figure 2 – Diagnosis of Front Wheel Bearings

FRETTAGE

Corrosion set up by small relative movement of parts with no lubrication.
Replace bearing. Clean related parts. Check seals and check for proper lubrication.

SMEARS

Smearing of metal due to slippage. Slippage can be caused by poor fits, lubrication, overheating, overloads or handling damage. Replace bearings, clean related parts and check for proper fit and lubrication.

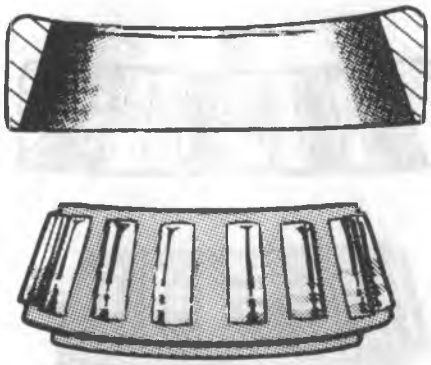

STAIN DISCOLORATION

Discoloration can range from light brown to black caused by incorrect lubricant or moisture.
Re-use bearings if stains can be removed by light polishing or if no evidence of overheating is observed.
Check seals and related parts for damage.

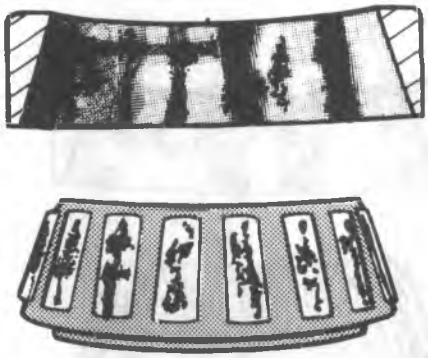

HEAT DISCOLORATION

Heat discoloration can range from faint yellow to dark blue resulting from overload or incorrect lubricant.
Excessive heat can cause softening of races or rollers. To check for loss of temper on races or rollers a simple file test may be made. A file drawn over a tempered part will grab and cut metal, whereas, a file drawn over a hard part will glide readily with no metal cutting.
Replace bearings if over heating damage is indicated. Check seals and other parts.

B-00531

Figure 3—Diagnosis of Front Wheel Bearings

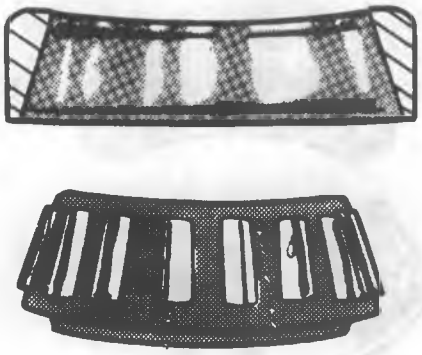

MISALIGNMENT

Outer race misalignment due to foreign object.
Clean related parts and replace bearing. Make sure races are properly seated.

CRACKED INNER RACE

Race cracked due to improper fit, cocking, or poor bearing seats.
Replace bearing and correct bearing seats.

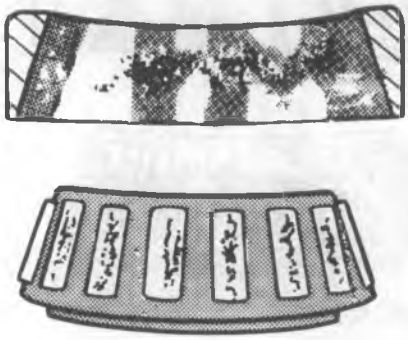

FATIGUE SPALLING

Flaking of surface metal resulting from fatigue.
Replace bearing, clean all related parts.

BRINELLING

Surface indentations in raceway caused by rollers either under impact loading or vibration while the bearing is not rotating.
Replace bearing if rough or noisy.

B-09860

Figure 4 – Diagnosis of Front Wheel Bearings

INDEPENDENT FRONT SUSPENSION ON-VEHICLE SERVICE

SHOCK ABSORBER REPLACEMENT

Remove or Disconnect (Figures 5 through 11)

- Raise the vehicle on a hoist.

1. Nuts (23), washers (22) and bolts (21).
2. Shock absorber (20) from the lower control arm.
3. Nuts (16), washers (17) and bolts (21).
4. Shock absorber (20) from the frame.

Inspect

- Shock absorbers for damage and leaks.
- Test the shock absorbers. Refer to "Shock Absorber Bench Test" in this section.

Install or Connect (Figures 5 through 11)

1. Shock absorber (20) onto the vehicle.

NOTICE: See "Notice" on page 3C-1 of this section.

2. Bolts (21), washers (17 and 22) and nuts (16 and 23).

Tighten

- R Models:
  - Nut (16) to 190 N•m (140 ft. lbs.).
  - Bolt (21) to 80 N•m (59 ft. lbs.).
- P Models:
  - Nut (16) to 190 N•m (140 ft. lbs.).
  - Nut (23) to 80 N•m (59 ft. lbs.).
- Lower the vehicle.

STABILIZER SHAFT REPLACEMENT

Remove or Disconnect (Figures 5 through 10 and 12)

- Raise the vehicle and support with suitable safety stands.

1. Wheel and tire assembly.
2. Bolts (54), nuts (58), washers (55 and 57) and clamps (52).
3. Stabilizer shaft (59) from the frame.
4. Bolts (43), nuts (38), washers (39 and 41) and clamps (42).
5. Stabilizer shaft (59) from the lower control arm (36).
6. Bushings (40 and 53).

Inspect

Bushings (40 and 53) for excessive wear, deterioration or other damage. Replace as necessary.

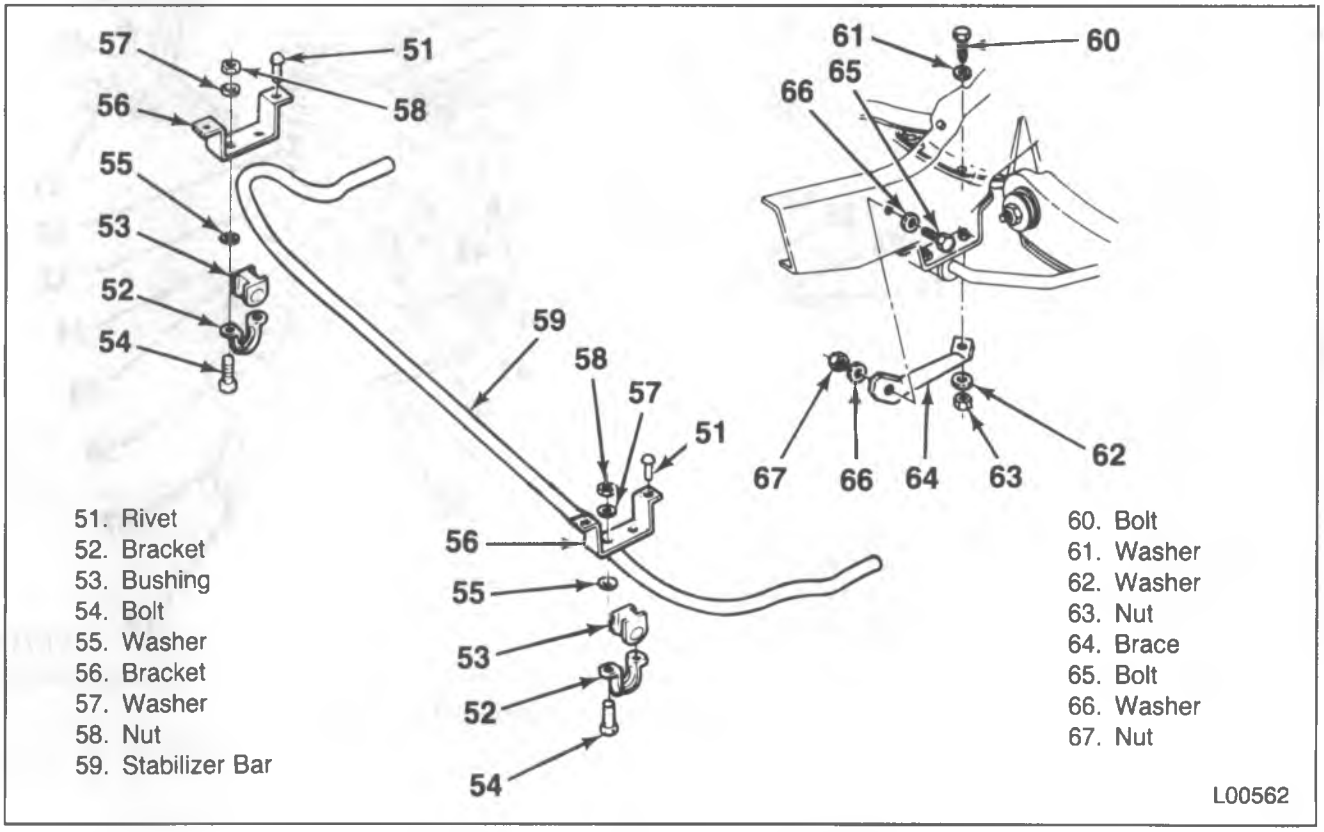

Figure 5—R Model Stabilizer Shaft and Brace

Install or Connect (Figures 5 through 12)

1. Bushings (40 and 53) to the stabilizer bar (59).
   - Slit on the insulator faces forward.
   - Use rubber lubricant to ease the installation.
2. Stabilizer bar (59) to the vehicle.
3. Clamps (52), bolts (54), washers (55 and 57) and nuts (58).

NOTICE: See "Notice" on page 3C-1 of this section.

4. Clamps (42), bolts (43), washers (39 and 41) and nuts (38).

Tighten

- R and P Models:
  - Nuts (38 and 58) to 33 N•m (24 ft. lbs.).

3. Wheel and tire assembly.

- Lower the vehicle.

WHEEL HUB/ROTOR ASSEMBLY REPLACEMENT

Remove or Disconnect (Figure 13)

- Raise the vehicle and support it with suitable safety stands.

1. Wheel and tire assembly.
2. Caliper. Refer to HYDRAULIC FOUNDATION BRAKES (SEC. 5A2).

NOTICE: Support the caliper with a piece of wire to prevent damage to the brake line.

3. Dust cap (79).
4. Cotter pin (80), nut (78), and washer (77).
5. Wheel hub/rotor.
   - Pull the hub/rotor free, making sure the outer wheel bearing (76) comes free of the hub/rotor.
   - Do not damage the steering knuckle (31) spindle threads.

1. Bolt
2. Washer
12. Fitting
24. Nut
25. Washer
30. Bumper
31. Steering Knuckle
32. Coil Spring
33. Bumper
34. Cotter Pin
35. Nut
36. Lower Control Arm
37. Lower Ball Joint
38. Nut
39. Washer
40. Bushing
41. Washer
42. Bracket
43. Bolt
44. U-Bolt
45. Rivet
46. Bushing
47. Bracket
48. Washer
49. Nut
50. Pivot Shaft
69. Air Cylinder

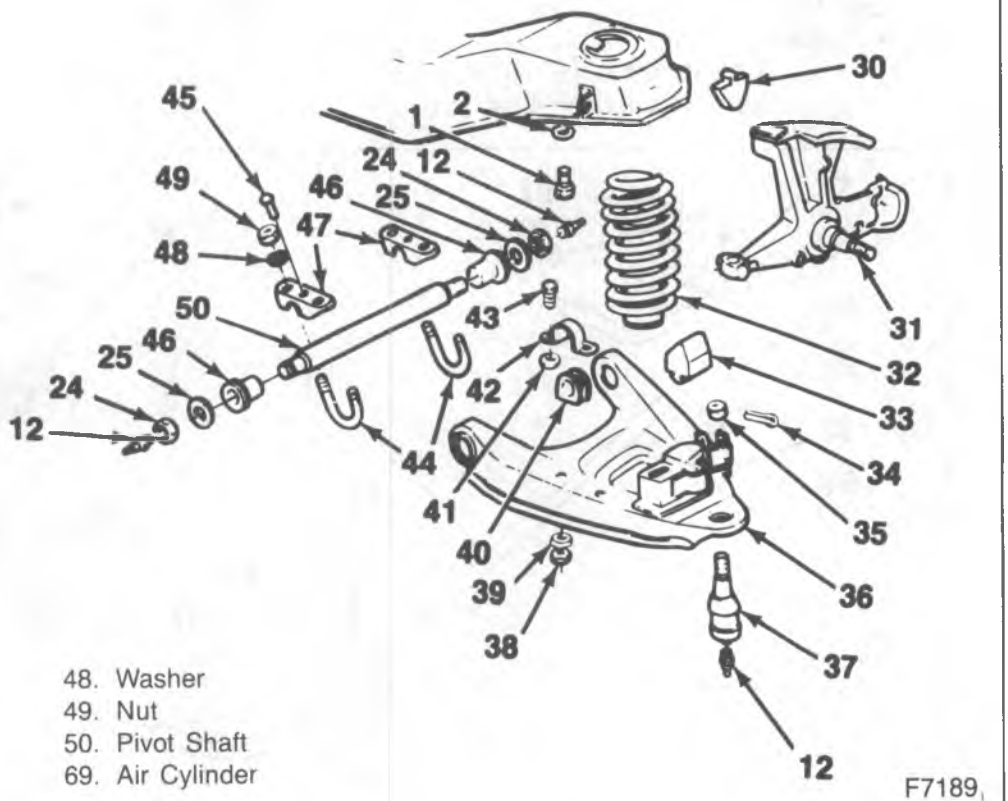

Figure 6—R Model Lower Control Arm/Components

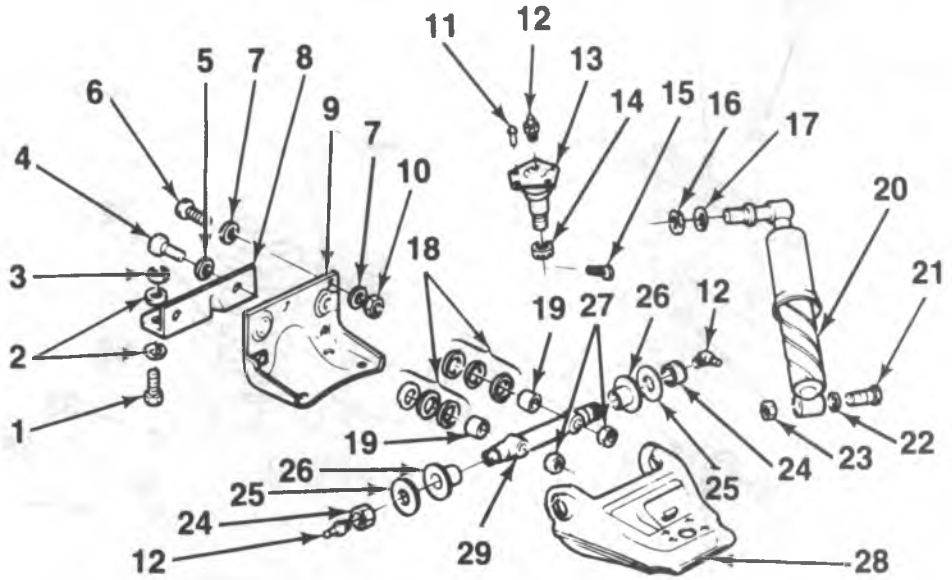

1. Bolt
2. Washer
3. Nut
4. Bolt
5. Washer
6. Bolt
7. Washer
8. Reinforcement
9. Bracket
10. Nut
11. Rivet
12. Fitting
13. Upper Ball Joint
14. Nut
15. Cotter Pin
16. Nut
17. Washer
18. Shim Pack
19. Spacer
20. Shock Absorber
21. Bolt
22. Washer
23. Nut
24. Nut
25. Washer
26. Bushing
27. Nut
28. Upper Control Arm
29. Pivot Shaft

L00564

Figure 7—R Model Upper Control Arm/Components

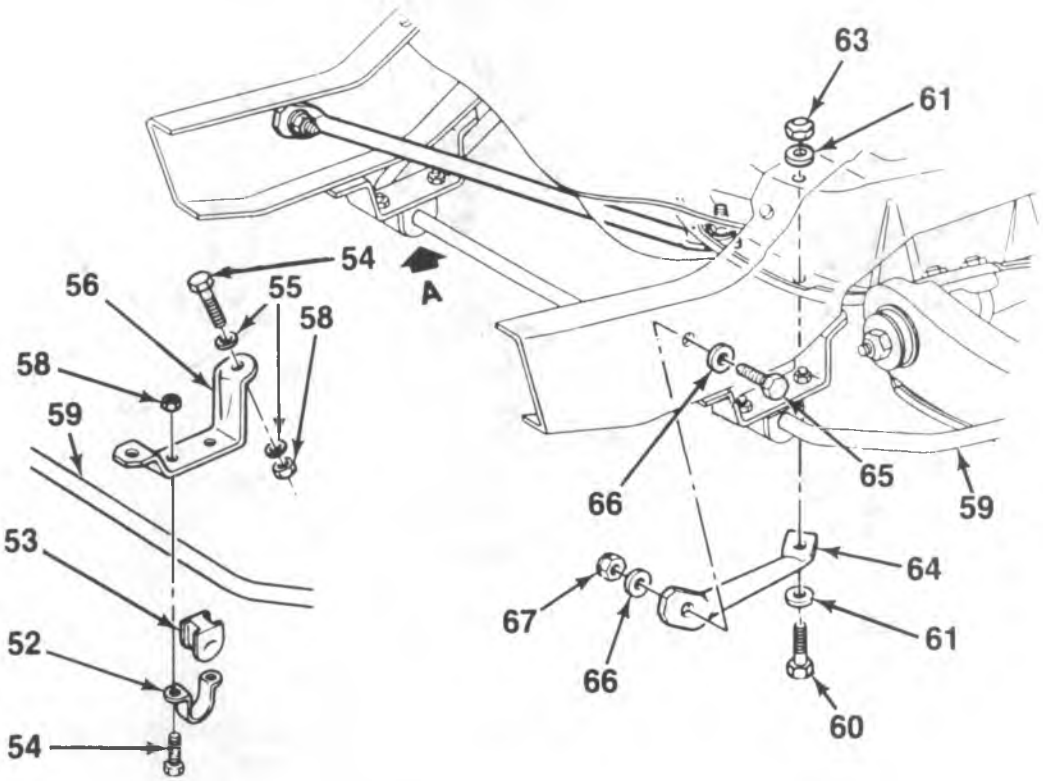

52. Bracket
53. Bushing
54. Bolt
55. Washer
56. Bracket
58. Nut
59. Stabilizer Bar
60. Bolt
61. Washer
63. Nut
64. Brace
65. Bolt
66. Washer
67. Nut

V0048

Figure 8—P Model Stabilizer Shaft and Brace

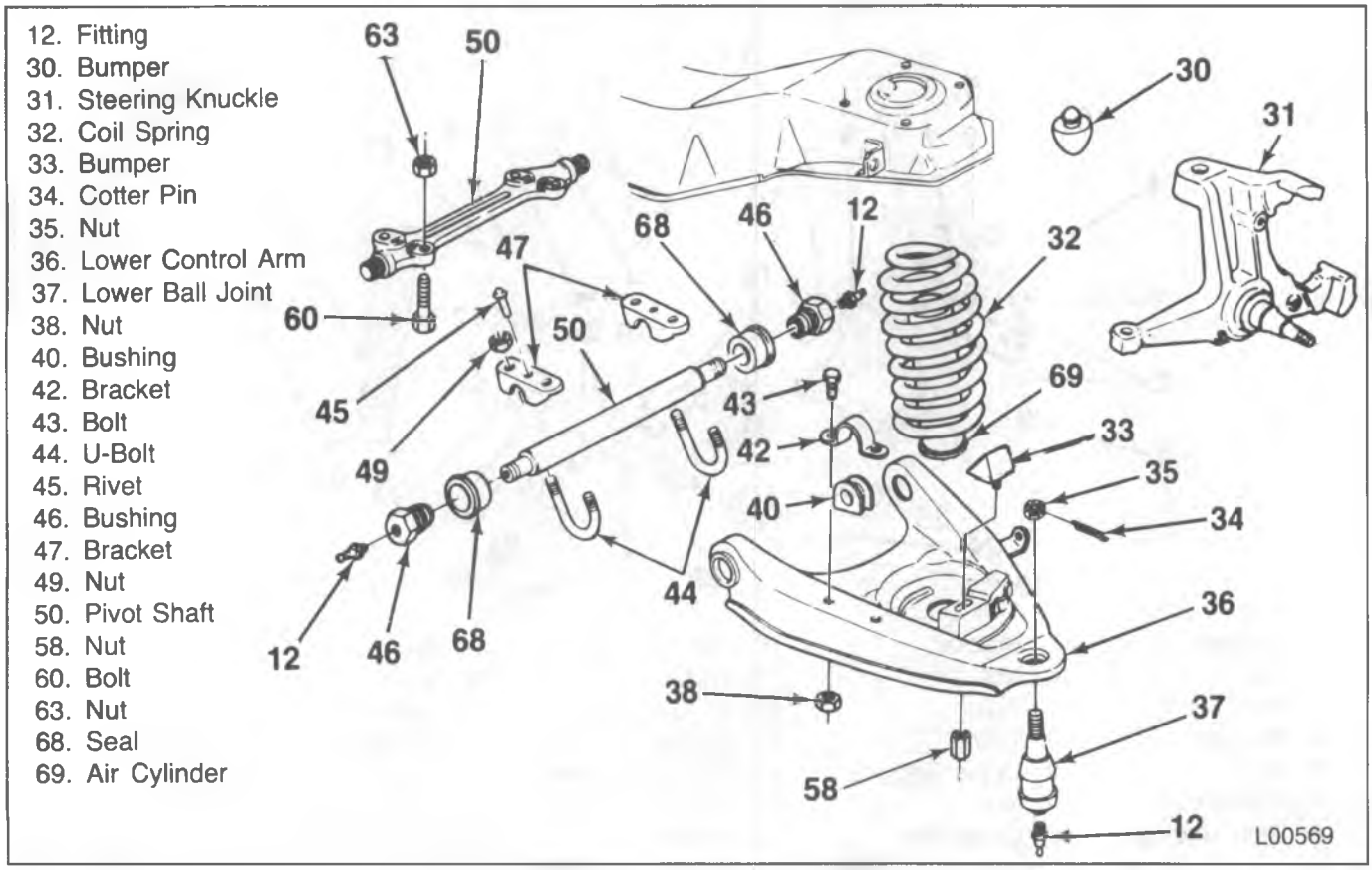

Figure 9—P Model Lower Control Arm/Components

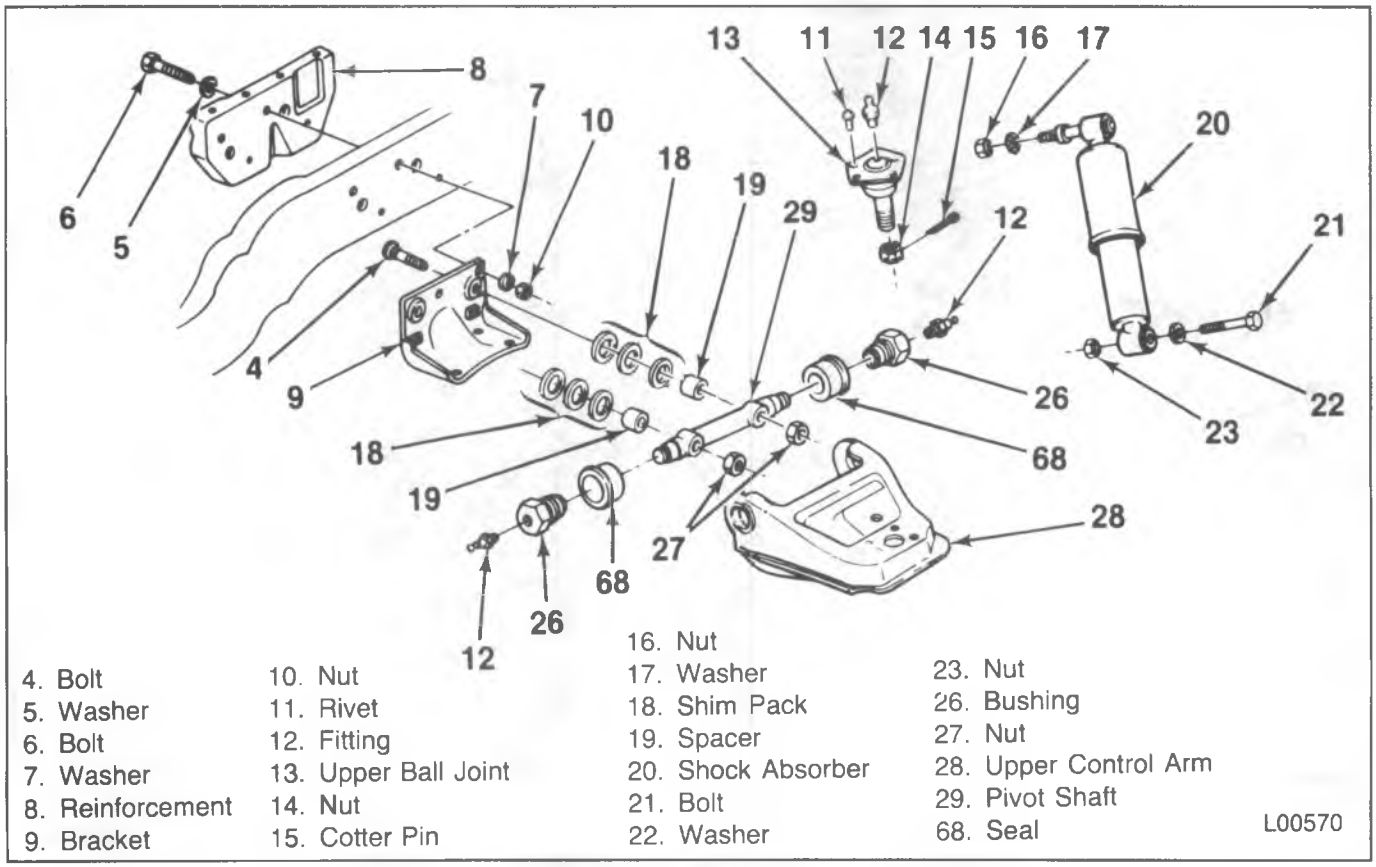

Figure 10—P Model Upper Control Arm/Components

6. Seal (72).
   - Pry out the seal (72).
7. Inner wheel bearing (73).
8. Races (75 and 82).
   - Drive out each race using a brass drift inserted behind the race in notches in the hub.

Clean

1. Grease from the hub/rotor (81) and steering knuckle spindle.
   - Remove grease from inside the hub.
2. Grease from the wheel bearings (73 and 76) and races (75 and 82).
   - Use clean solvent and a small brush with no loose bristles.
   - Do not spin the wheel bearings with compressed air to dry them – the wheel bearings may be damaged.

Inspect

1. Wheel bearings (73 and 76) and their races (75 and 82) for damage or wear.
   - Refer to "Front Wheel Bearings" in this section.
   - If either a bearing or its race is damaged or worn, replace both.
2. Hub/rotor for damage.
   - Out-of-round or scored conditions.
   - Pitting or cracks.

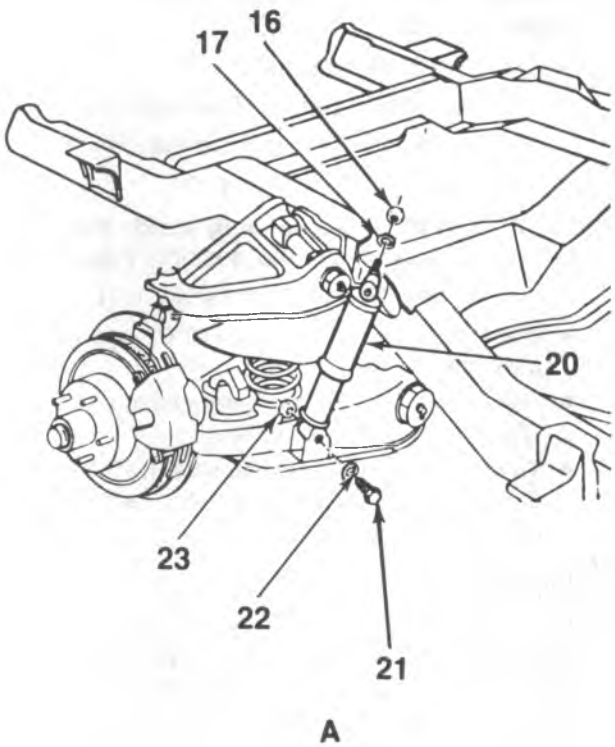

A. R and P-Model
16. Nut
17. Washer
20. Shock Absorber
21. Bolt
22. Washer
23. Nut

V0037

Figure 11 – Shock Absorber Attachment Points

38. Nut
39. Washer
40. Bushing
41. Washer
42. Clamp
43. Bolt
52. Clamp
53. Bushing
54. Bolt
55. Washer
57. Washer
58. Nut
59. Stabilizer Bar

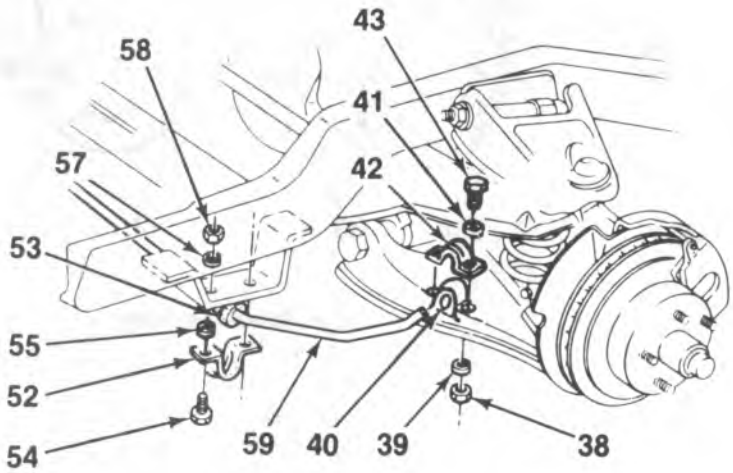

B-07475

Figure 12 – Stabilizer Shaft Attachment Points

Install or Connect (Figures 13 and 14)

Tools Required:

J 8092 Driver Handle

J 8457 Wheel Bearing Race Installer

J8849 Wheel Bearing Race Installer

J 9746-02 Hub/Rotor Support

NOTICE: Start the races squarely inside the hub/ rotor to avoid distortion and possible cracking.

1. Races (75 and 82) into the hub/rotor (81).
   - Place the hub/rotor on J 9746-02 and rest this assembly on press bars.
   - Use J 8457 to drive the outer bearing outer race (75) into position (figure 14).
   - Turn over the hub/rotor, remove J 9746-02, and drive in the inner bearing outer race (82) with J 8449 (figure 15).

Important

- Use an approved high-temperature front wheel bearing grease to lubricate the bearings. Refer to MAINTENANCE AND LUBRICATION (SEC. 0B).
- Do not mix different greases as mixing may change the grease's properties resulting in poor performance.

2. Apply a thin film of grease to the steering knuckle spindle at the outer wheel bearing seat and at the inner wheel bearing seat, shoulder, and seal seat.
3. Put a small quantity of grease inboard of each wheel bearing dust cap (79).

NOTICE: Failure to completely pack the wheel bearing (cones, rollers, and cage) with grease will result in premature wheel bearing wear and/or damage.

4. Fill each wheel bearing (cone and roller assembly) full of grease.
   - Use a cone-type grease machine that forces grease into the bearing.
   - If a cone-type grease machine is not available, pack the wheel bearing by hand.
   - When packing the wheel bearing by hand, work the grease into the bearings between the rollers, cones and the cage.
5. Inner wheel bearing (73) into the hub/rotor (81).
   - Put an additional quantity of grease outboard of this bearing.
6. New seal (72).
   - Use a flat plate or block to install the seal to ensure it is flush with the hub/rotor flange.
   - Lubricate the seal lip with a thin layer of grease.

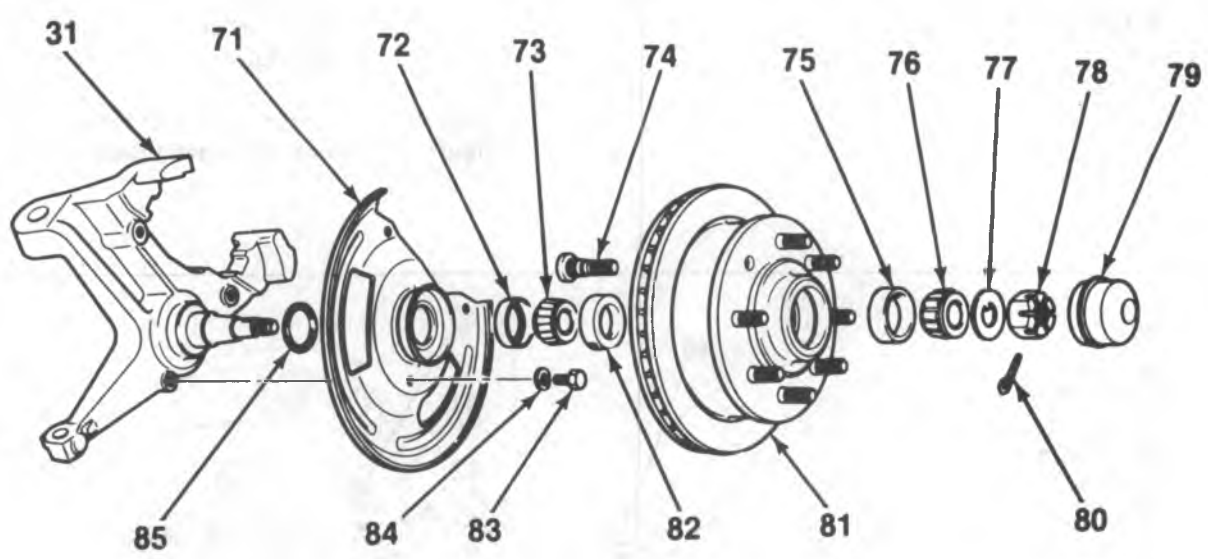

31. Steering Knuckle
71. Shield
72. Seal
73. Inner Wheel Bearing
74. Wheel Hub Bolt
75. Outer Race
76. Outer Wheel Bearing
77. Washer
78. Nut
79. Dust Cap
80. Cotter Pin
81. Wheel Hub/Rotor
82. Inner Race
83. Bolt
84. Washer
85. Gasket

L00752

Figure 13—Steering Knuckle and Hub Components

7. Hub/rotor (81).
   - Do not damage the steering knuckle spindle threads.
8. Outer wheel bearing (76).
   - Slide it over the spindle until the wheel bearing (76) fully seats against the hub/rotor outer race (75).

NOTICE: See "Notice" on page 3C-1 of this section.

9. Washer (77), nut (78) and cotter pin (80).
   - Do not place the cotter pin through the hole in the spindle until the wheel bearings are adjusted.

Tighten

- Nut (78) to 16 N•m (12 ft. lbs) while turning the hub/rotor assembly in either direction.

- Put an additional quantity of grease outboard of the wheel bearing (76).
- Adjust the wheel bearings.
  - Refer to "Wheel Bearing Adjustment" in this section.

12. Dust cap (79) on the hub/rotor (81).
13. Caliper. Refer to HYDRAULIC FOUNDATION BRAKES (SEC. 5A2).
14. Wheel and tire assembly and lower the vehicle.

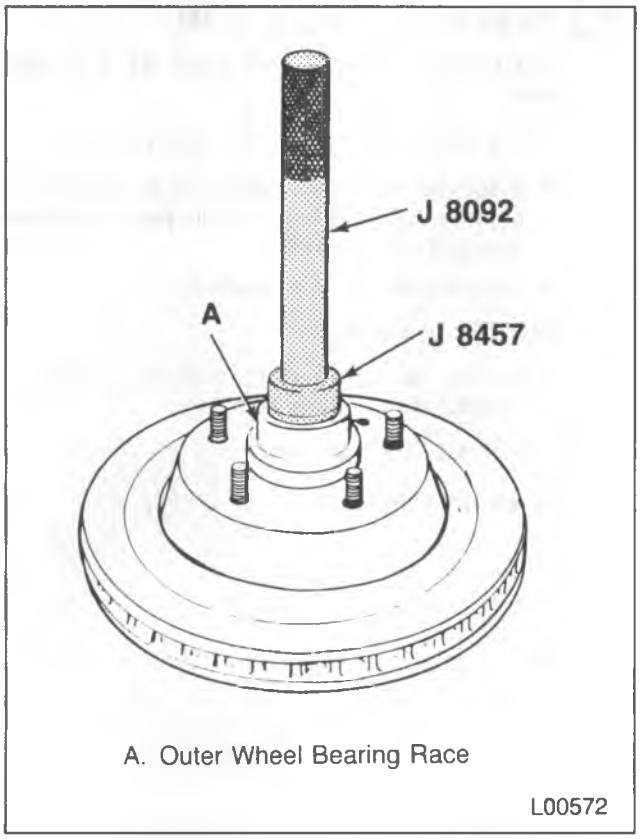

Figure 14 – Installing the Outer Wheel Bearing Race

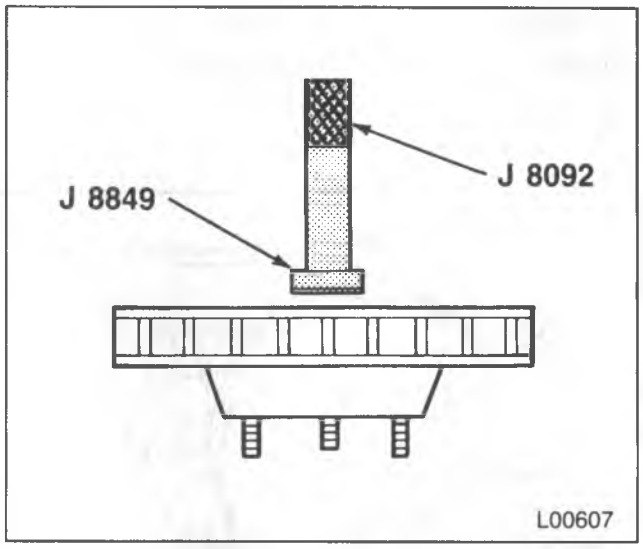

Figure 15 – Installing the Inner Bearing Outer Race

WHEEL BEARING ADJUSTMENT

Important (Figures 13 and 16)

- The proper functioning of the front suspension cannot be maintained unless the front wheel bearings are correctly adjusted. The bearings must be a slip fit on the spindle and the inside diameter of the wheel bearing must be lubricated to ensure the bearings will creep. The spindle nut (78) must have a free-running fit on the spindle threads.

NOTICE: Never preload the front wheel bearings. Damage can result by the steady thrust on the roller ends which comes from preloading.

Adjust

- Raise the vehicle and support it with suitable safety stands under the lower control arms.

1. Remove the dust cap (79) from the hub/rotor (81).
2. Remove the cotter pin (80).

Tighten

- Nut (78) to 16 N•m (12 ft. lbs.) while rotating the wheel and tire assembly (this will seat the bearings).

3. Back off the nut (78) to the "just loose" position.
4. Finger tighten the nut (78).
5. Back off the nut (78) until the hole in the spindle lines up with a slot on the nut.
   - Do not back off more than 1/2 of a flat.
6. New cotter pin (80).
   - Make sure the bent ends do not interfere with the dust cap (79).

Measure

- Endplay in the hub/rotor assembly (81). See figure 16.
- It should measure between 0.03 mm (0.0012 inches) and 0.13 mm (0.005 inches) when properly adjusted.

7. Install the dust cap (79) on the hub/rotor (81).
8. Wheel and tire assembly (if removed).

- Lower the vehicle.

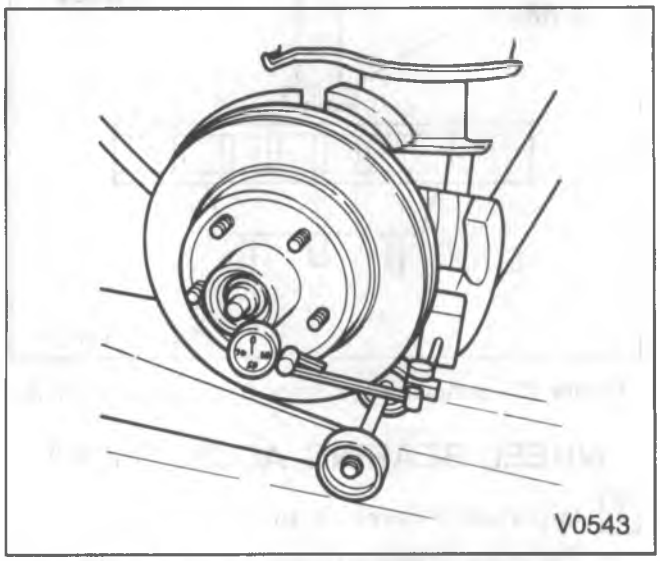

Figure 16 – Measuring Hub/Rotor End Play

WHEEL HUB BOLT REPLACEMENT

Remove or Disconnect (Figure 17)

Tool Required:

J 9746-02 Hub/Rotor Support

1. Hub/rotor from the vehicle.
   - Refer to "Wheel Hub/Rotor Assembly Replacement" in this section.

NOTICE: Place J 9746-02 between the press bars and the hub/rotor to protect the rotor surfaces.

2. Wheel hub bolts (74) with a press.
   - Support the hub/rotor (81) using J 9746-02 and press bars (figure 17).
   - Do not damage the wheel mounting surface on the hub/rotor flange.

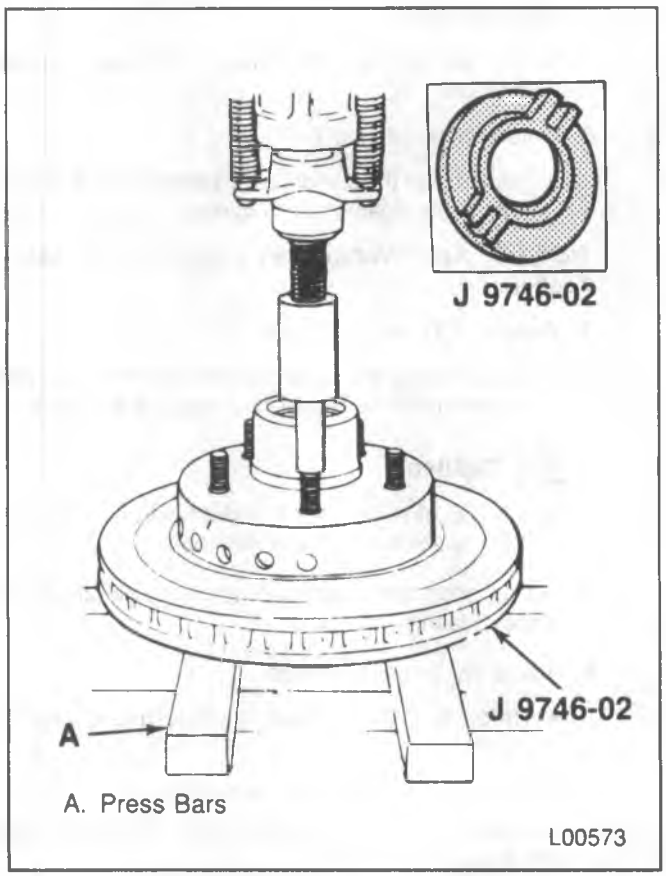

Figure 17 – Removing the Hub Bolts

Install or Connect (Figure 18)

NOTICE: See "Notice" on page 3C-1 of this section.

1. Wheel hub bolts (74) into the hub/rotor (81).
   - Place four washers onto the bolt, then tighten a nut onto the bolt until the bolt fully seats into the hub/rotor (81) (figure 18).
   - Remove the nut and washers.
2. Hub/rotor to the vehicle.
   - Refer to "Wheel Hub/Rotor Assembly Replacement" in this section.
3. Wheel and tire assembly.

- Lower the vehicle.

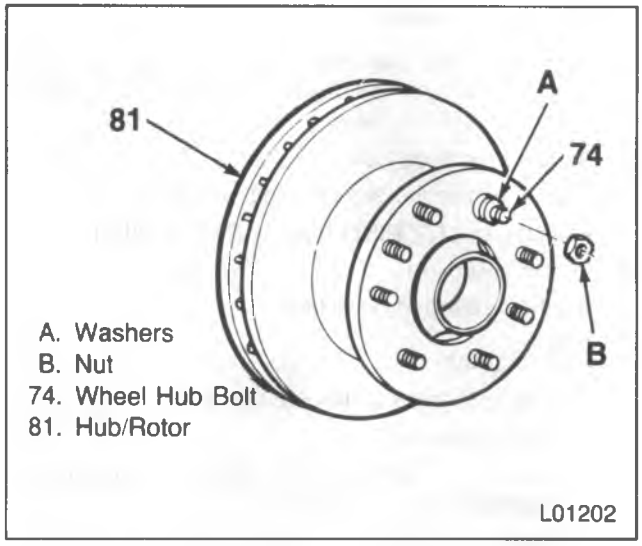

Figure 18 – Installing the Hub Bolts

STEERING KNUCKLE REPLACEMENT

Remove or Disconnect (Figures 5 through 10, 19 and 20)

Tool Required:

J 23742 Ball Joint Separator

1. Wheel and tire assembly.

Important

- It is recommended that the vehicle be raised and supported as on a twin-post hoist so that the front coil spring remains compressed, yet the wheel and steering knuckle assembly remain accessible. If a frame hoist is used, support the lower control arm with an adjustable jackstand to safely retain the spring in its curb height position.

2. Caliper.
   - Refer to HYDRAULIC FOUNDATION BRAKES (SEC. 5A2).
3. Hub/rotor (81).
   - Refer to "Wheel Hub/Rotor Assembly Replacement" in this section.
4. Bolts (83) and washers (84).
5. Gaskets (85).
6. Splash shield (71).
7. Steering knuckle from the tie rod end.
   - Refer to STEERING LINKAGE (SEC. 3B3).
8. Steering knuckle (31) from the upper ball joint (13).
   - Position a floor jack under the lower control arm (36) near the spring seat.
   - Raise the jack until it just supports the lower control arm.
   - Use J 23742 to break the upper ball joint free of the steering knuckle (figure 19).
   - Raise the upper control arm (28) to disengage the upper ball joint from the steering knuckle.

Important

- Floor jack must remain under the lower control arm spring seat during removal and installation to retain the spring and the lower control arm in position.

9. Steering knuckle (31) from the lower ball joint (37).
   - Use J 23742 to break the lower ball joint free from the steering knuckle (figure 20).
   - Lift the steering knuckle off the lower ball joint.

Inspect

1. Tapered holes in the steering knuckle that attach to the ball joints and the tie rod end.
   - Remove any dirt.
   - If any tapered hole is out of round, deformed, or damaged in any way, replace the steering knuckle (31).
2. Spindle for wear or damage.
   - The steering knuckle (31) must be replaced if the spindle is damaged or worn.

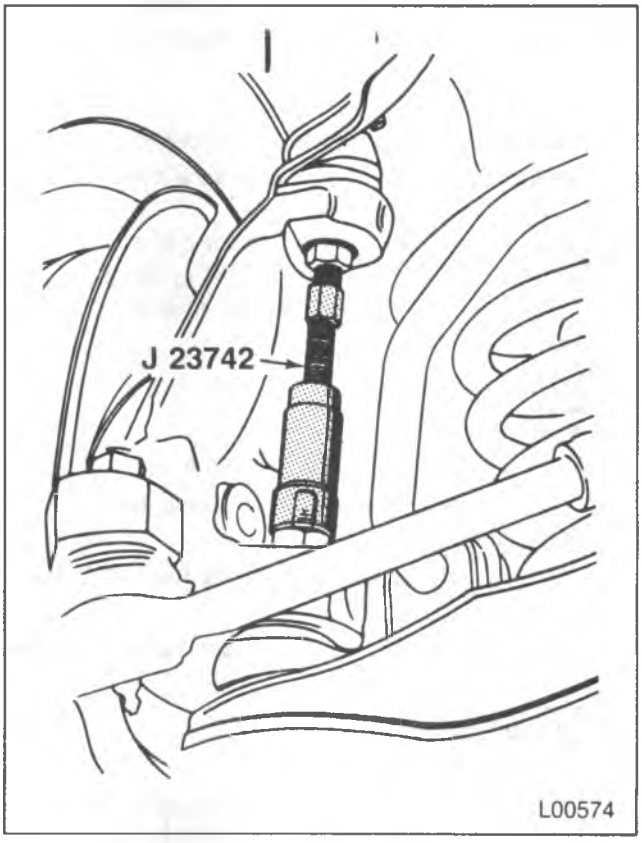

Figure 19 – Disconnecting the Upper Ball Joint

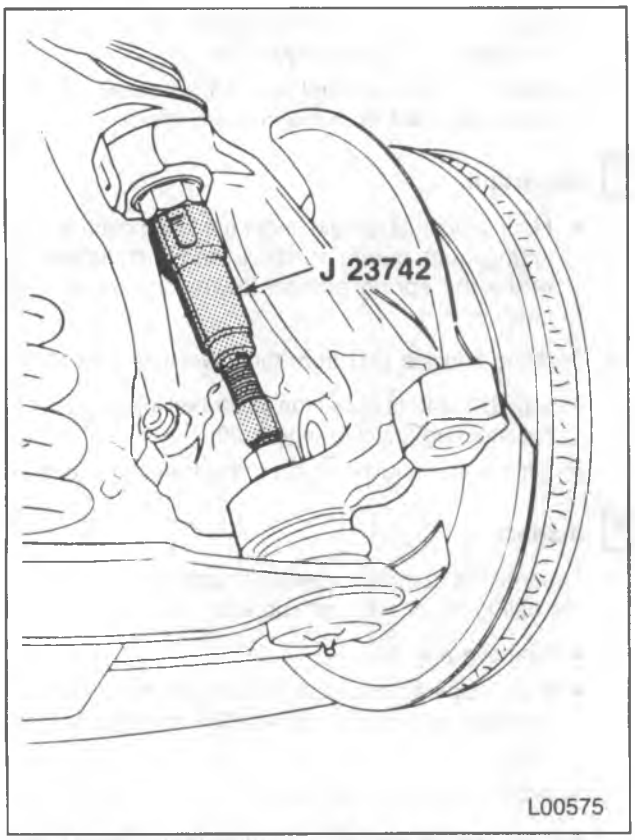

Figure 20—Disconnecting the Lower Ball Joint

Install or Connect (Figures 5 through 10)

NOTICE: For steps 3 and 8, see "Notice" on page 3C-1 of this

section.

1. Steering knuckle (31) to the lower ball joint (37).
   - Press the steering knuckle onto the lower ball joint (37) until it is fully seated.
2. Steering knuckle (31) to the upper ball joint (13).
   - Lower the upper control arm (28) to seat the upper ball joint (13) into the steering knuckle.
3. Nuts (14 and 35).

   Tighten
   - R1 Models:
     - Nut (14) to 68 N•m (50 ft. lbs.).
     - Nut (35) to 122 N•m (90 ft. lbs.).
   - All other models:
     - Nuts (14 and 35) to 122 N•m (90 ft. lbs.).
4. Cotter pins (15 and 34).
   - Tighten the nuts more (14 and 35) to align the cotter pin, if needed.

   Important
   - R1 Models:
     - Nut (14); maximum torque to align the cotter pin is 122 N•m (90 ft. lbs.).
     - Nut (35); maximum torque to align the cotter pin is 175 N•m (130 ft. lbs.).
   - All other models:
     - Nuts (14 and 35); maximum torque to align the cotter pin is 175 N•m (130 ft. lbs.).
- Remove the floor jack.
5. Tie rod end to the steering knuckle (31).
   - Refer to STEERING LINKAGE (SEC. 3B3).
6. Splash shield (71).
7. Washers (84) and bolts (83).

   Tighten
   - Bolts (83) to 13.5 N•m (120 in. lbs.).
8. Hub/rotor assembly.
   - Refer to "Wheel Hub/Rotor Assembly Replacement" in this section.
9. Caliper.
   - Refer to HYDRAULIC FOUNDATION BRAKES (SEC. 5A2).
- Adjust the wheel bearings.
  - Refer to "Wheel Bearing Adjustment" in this section.
- Check the front alignment and reset as required.
  - Refer to FRONT END ALIGNMENT (SEC. 3A).
10. Wheel and tire assembly.
- Lower the vehicle.

COIL SPRING REPLACEMENT

Remove or Disconnect (Figures 5 through 10 and 21)

Tool Required:

J 23028-01 Spring Remover

- Raise the vehicle and support it with suitable safety stands, allowing the control arms to hang free.
1. Wheel and tire assembly.
2. Shock absorber (20) at the lower end and move it aside.
3. Nuts (38), bolts (43), washers (41) and clamp (42).
4. Stabilizer bar (59) from the lower control arm (36).
5. Nuts (49) and washers (48).
   - Install J 23028-01 on a suitable jack and then under the lower control arm as shown in Figure 21.

CAUTION: Failure to secure J 23028-01 to a suitable floor jack could result in personal injury.

Important
- Install a chain around the coil spring (32) and through the lower control arm (36) as a safety precaution.
- In order to do this with an air cylinder installed, remove the valve core from the cylinder (69) and expel the air by pushing on it with a pry bar. Replace the valve cap in order to retain the vacuumed condition, and push the air cylinder as far as possible toward the top of the spring.

- Raise the jack to remove the tension from the lower control arm pivot shaft (50) and remove the "U" bolts.
- Lower the control arm by slowly releasing the jack until the spring can be removed.
  - Do not damage the ball joint (37) by applying too much force on it.

6. Spring (32) and safety chain, only after all compression is removed from the spring.
   - Proper maneuvering of the spring will allow easy removal.
7. Air cylinder (69), if equipped.

Inspect

- Air cylinder for leaks by replacing the valve core and inflating to 20 psi. Submerge in water and check for air bubbles.

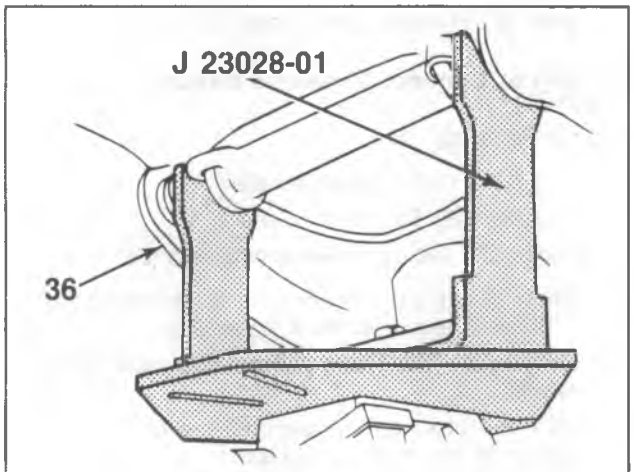

36. Lower Control Arm

L00576

Figure 21 – Removing the Coil Spring

Install or Connect (Figures 5 through 10 and 21)

NOTICE: For steps 3, 5 and 7, see "Notice" on page 3C-1 of this section.

Tool Required:

J 23028-01 Spring Remover

1. Air cylinder (69), if equipped.
   - Install the air cylinder inside the coil spring so that the protector plate is toward the upper control arm. This will allow the Schrader valve to protrude through the hole in the lower control arm.
2. Coil spring (32) into position on the lower control arm (36).
   - Use J 23028-01 bolted on a floor jack.

CAUTION: Failure to secure J 23028-01 to a suitable floor jack could result in personal injury.

Important

- Install a chain around the coil spring (32) and through the lower control arm (36) as a safety precaution.

3. Slowly lift the lower control arm into position.
   - Line up the front indexing hole in the shaft (50) with the crossmember attaching studs.
   - Do not damage the lower ball joint (37).
4. U-bolts (44), washers (48) and nuts (49).

Tighten

- All models to 115 N•m (85 ft. lbs.).

- Lower the floor jack, and remove J 23028-01.

5. Stabilizer bar (59) to the lower control arm (36).
6. Clamp (42), washers (41), bolts (43) and nuts (38).

Tighten

- Nuts (38) to 33 N•m (24 ft. lbs.).

7. Shock absorber (20) to the lower control arm (36).
8. Washer (22), bolt (21) and nut (23).

Tighten

- R Models:
  - Bolt (21) to 80 N•m (59 ft. lbs.).
- P Models:
  - Nut (23) to 80 N•m (59 ft. lbs.).

- Check the front end alignment.
  - Refer to FRONT END ALIGNMENT (SEC. 3A).

9. Wheel and tire and lower the vehicle.
10. Inflate air cylinders to 60 psi and lower the vehicle.
    - Once the weight is on the wheels, reduce the air pressure to 275 kPa (40 psi) – 345 kPa (50 psi).

AIR CYLINDER INSPECTION

Inspect (Figures 6 and 9)

Tool Required:

J 29547 Autobalance Refrigerant Leak Detector

1. Raise the vehicle and inflate the air cylinders (69) with a small amount of air-conditioning Refrigerant No. 12.
2. Use J 29547 for equivalent Refrigerant Leak Detector to check for leaks.
3. Lower the vehicle.

LOWER BALL JOINT REPLACEMENT

Inspect (Figure 22)

1. Raise the vehicle and remove the wheel and tire assembly. Support the weight of the control arms at the wheel hub and drum.
2. Measure the distance between the tip of the ball joint stud and the tip of the grease fitting below the ball joint (figure 22).
3. Move the support to underneath the control arm allowing the wheel hub and drum to hang free.
4. Measure the distance as in Step 2.
   - If the difference in measurements exceeds 2.38 mm (3/32 inches), for all models, the ball joint is worn and must be replaced.
5. If the ball joint seals are cracked, cut, or torn, replace them.

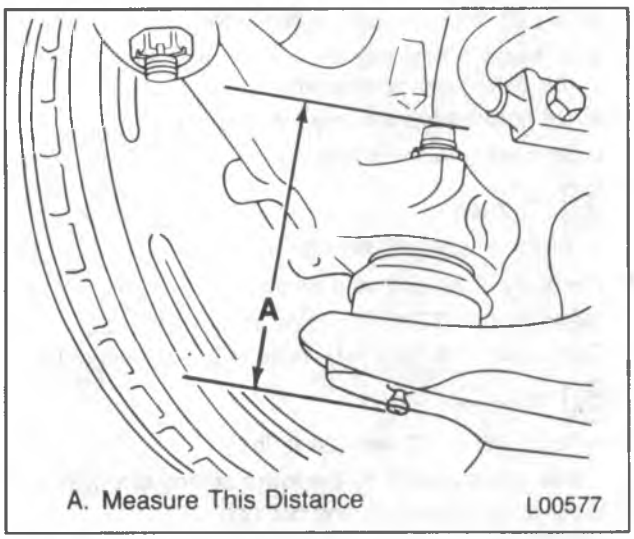

Figure 22 – Inspecting the Lower Ball Joint

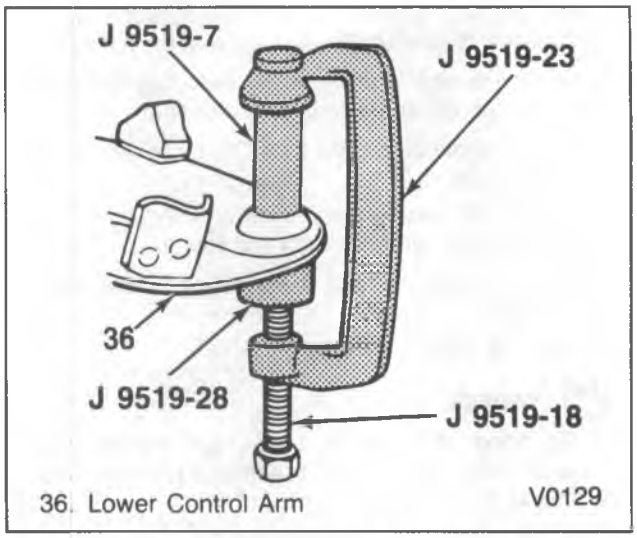

Figure 23 – Removing the Lower Ball Joint

Remove or Disconnect (Figures 5 through 10 and 23)

Tools Required:

J 23742 Ball Joint Separator
J 9519-7 Ball Joint Remover
J 9519-28 Ball Joint Remover
J 21474-30 Ball Joint Fixture

- Raise the vehicle on a hoist. If a frame hoist is used it will be necessary to support the lower control arm with a floor stand.

1. Wheel and tire assembly.
2. Cotter pin (34), nut (35) and grease fitting (12).
   - Loosen the nut (35) two turns but do not remove it.
3. Loosen the ball joint in the steering knuckle (31).
   - Use J 23742 between the ball joint studs (figure 20).
   - It may be necessary to remove the caliper and wire it to the frame to gain clearance for J 23742. Refer to HYDRAULIC FOUNDATION BRAKES (SEC. 5A2).
   - Extend J 23742 until the lower ball joint (37) breaks free from the steering knuckle (31).
   - Remove the nut (35) and J 23742.
4. Hub/rotor (81) and the knuckle assembly off the lower ball joint (37).
   - Install J 9519-18, J 9519-7, J 9519-28 and J 9519-23 (figure 23).
5. Ball joint (37) from the lower control arm (36).
   - Install J 9519-18, J 9519-22, J 9519-16 and J 9519-23 (figure 23).
   - Turn the hex head screw until the ball joint is free of the lower control arm.
   - Remove the tools and the ball joint (37).

Install or Connect (Figures 5 through 10 and 24)

Tools Required:

J 9519-16 Ball Joint Installer
J 9519-30 Ball Joint Fixture

1. Ball joint (37) into the lower control arm (36).
   - Start the ball joint into the control arm and install J 9519-16 and J 9519-30 (figure 24).
   - Position the bleed vent in the rubber boot facing inward.
   - Turn the hex head screw until the ball joint is seated in the lower control arm.
2. Ball joint into the steering knuckle (31).
   - Mate the steering knuckle (31) to the lower ball joint (37).
3. Caliper (if removed).
   - Refer to HYDRAULIC FOUNDATION BRAKES (SEC. 5A2).

NOTICE: See "Notice" on page 3C-1 of this section.

4. Nut (35).

Tighten

- Nut (35) to 122 N•m (90 ft. lbs.).

5. Cotter pin (34).
   - Tighten the nut (35) if needed.

Important

- Maximum torque to align the cotter pin is 175 N•m (130 ft. lbs.).

6. Fitting (12).
   - Lubricate the ball joint (37) with recommended lubricant.
7. Wheel and tire assembly.

- Lower the vehicle.

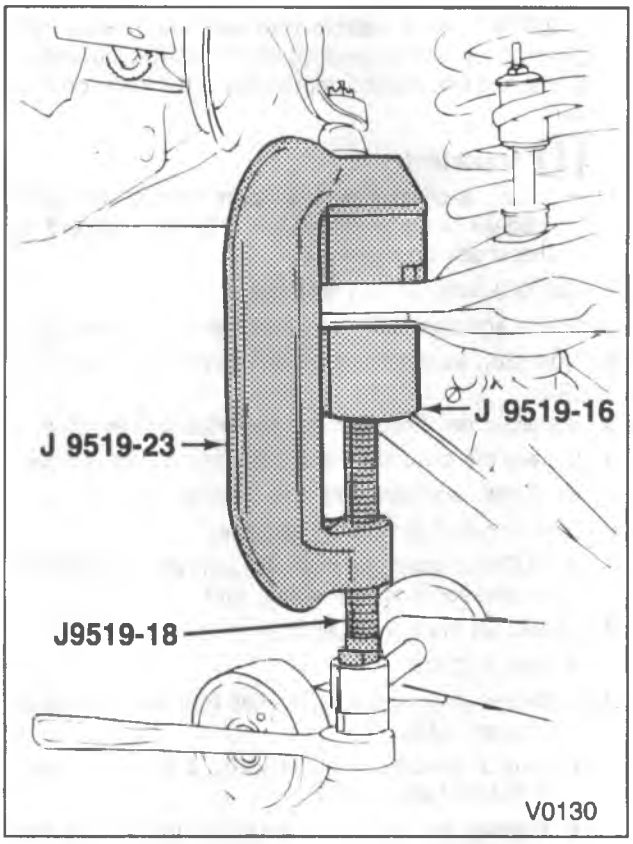

Figure 24 – Installing the Lower Ball Joint

UPPER BALL JOINT REPLACEMENT

Inspect

- The upper ball joint (13) is spring loaded in its socket. Replace the ball joint if there is any lateral movement or if it can be twisted in its socket with the fingers.
- The ball joint seals for cuts or tears. Replace the ball joint if any are found.

Remove or Disconnect (Figures 5 through 10 and 19)

Tool Required:

J 23742 Ball Joint Separator

- Raise the vehicle on a hoist. If a frame hoist is used, support the lower control arm with a floor jack.

1. Cotter pin (15) from the upper ball joint (13).
   - Loosen the nut (14) two turns but do not remove.
2. Caliper.
   - Refer to HYDRAULIC FOUNDATION BRAKES (SEC. 5A2).
3. Upper ball joint (13) from the steering knuckle (31).
   - Use J 23742 to separate the upper ball joint from the steering knuckle (figure 19).
4. Nut (14), and lift the upper control arm (28) free of the steering knuckle.
5. Ball joint (13) from the upper control arm (28).
   - Drill 6.35 mm (1/4 inch) deep holes in the rivet heads using a 3.175 mm (1/8 inch) diameter drill bit.
   - Drill off the rivet heads using a 12.7 mm (1/2 inch) diameter drill bit.
   - Punch out the rivets and remove the upper ball joint from the upper control arm.

Install or Connect (Figures 5 through 10 and 25)

NOTICE: For steps 1 and 2, see "Notice" on page 3C-1 of this section.

1. Upper ball joint (13) into the upper control arm (28).
   - Position into the upper control arm and install the four attaching bolts and nuts (figure 25).

Tighten

- Nuts to 25 N•m (18 ft. lbs.).

2. Upper ball joint to the steering knuckle (31).
   - The upper ball joint must be fully seated into the steering knuckle.
3. Nut (14).

Tighten

- R1 Models:
  - Nut (14) to 68 N•m (50 ft. lbs.).
- All other models:
  - Nut (14) to 122 N•m (90 ft. lbs.).

4. Cotter pin (15).
   - Tighten the nut (14) if needed.

Important

- R Models:
  - Maximum torque to align the cotter pin is 122 N•m (90 ft. lbs.).
- All other models:
  - Maximum torque to align the cotter pin is 175 N•m (130 ft. lbs.).

5. Upper ball joint grease fitting (12).
6. Grease the upper ball joint (13).
   - Use the recommended lubricant.
7. Caliper.
   - Refer to HYDRAULIC FOUNDATION BRAKES (SEC. 5A2).
8. Wheel and tire assembly.

- Check the front end alignment and reset as required.
  - Refer to FRONT END ALIGNMENT (SEC. 3A).

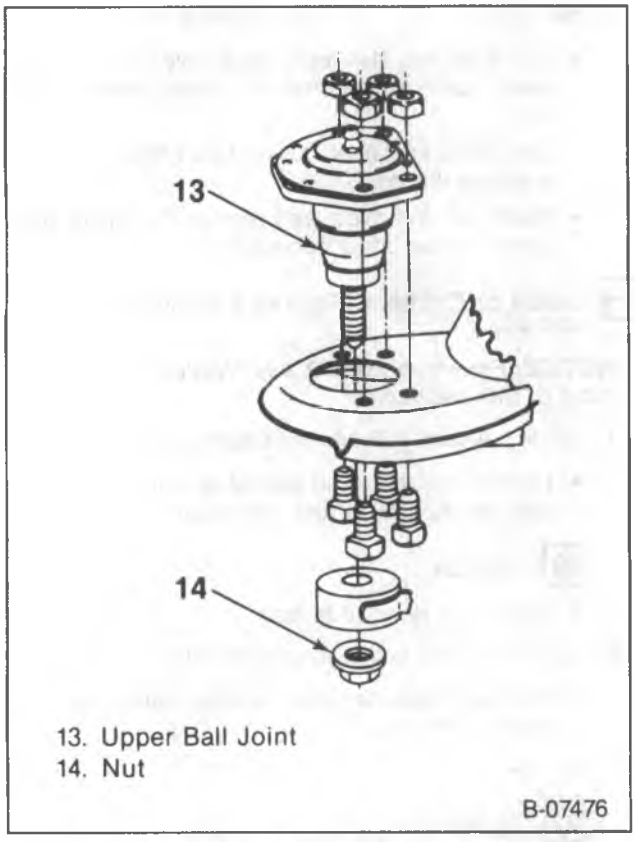

Figure 25—Installing the Upper Ball Joint

UPPER AND LOWER CONTROL ARM PIVOT SHAFT AND BUSHING REPLACEMENT

LOWER

R MODELS

If just the bushings (46) or the pivot shaft (50) need replacement, the lower control arm (36) does not have to be removed from the vehicle.

Remove or Disconnect (Figures 8 through 10, 21 and 26)

Tools Required:

J 23028-01 Coil Spring Remover

J 24435-2 Lower Control Arm Bushing Spacer

J 24435-3 Lower Control Arm Bushing Remover

J 24435-6 Lower Control Arm Bushing Spacer

J 24435-7 Lower Control Arm Bushing Fixture

- Raise the vehicle on a hoist and support the frame so the lower control arms hang free.

CAUTION: Failure to install J 23028-01 to a suitable floor jack could result in personal injury.

1. J 23028-01 to a suitable floor jack and raise it into position (under the lower control arm (36)), inboard of the spring and into the depression of the lower control arm.

Important

- Install a chain over the upper control arm (28) inboard of the stabilizer bar (59) and outboard of the shock absorber (20).

2. Nut (23), washer (22) and bolt (21).
3. Shock absorber (20) from the lower control arm (28).
4. Nuts (38), washers (39 and 41), clamp (42) and bolts (43).
5. Stabilizer bar (59) from the lower control arm (28).
6. Loosen the pivot shaft end nuts (24); do not remove.
7. Nuts (49), washers (48) and U-bolts (44).
8. Lower control arm from the frame.
   - SLOWLY lower the floor jack until all compression is released from the spring (32).
9. Stakes on the front bushing.
   - Use J 22717.
10. Bushings (46) and the pivot shaft (50) from the lower control arm (36).
    - Use J 24435-2, J 24435-3, J 24435-6 and J 24435-7 (figure 26).
    - Tighten the bolt on J 24435-7 to remove the bushing.
    - The pivot shaft (50) will slide out of the lower control arm after one bushing is removed.
    - Leave the pivot shaft (50) inside the lower control arm (36) to remove the remaining bushing.

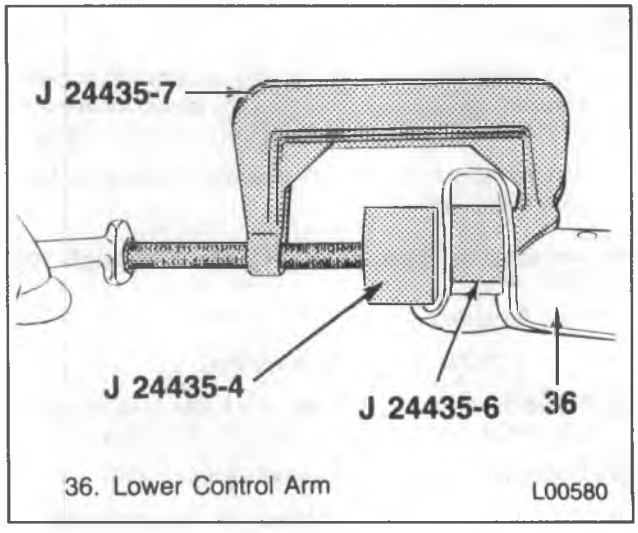

Figure 26—Removing or Installing the Lower Control Arm Bushings, (R1 Models)

Install or Connect (Figures 8 through 10 and 26)

NOTICE: For steps 3, 4, 5 and 8, see "Notice" on page 3C-1 of

this section.

Tools Required:

J 23028-01 Coil Spring Compressor

J 24435-4 Lower Control Arm Bushing Installer
J 24435-6 Lower Control Arm Bushing Spacer
J 24435-7 Lower Control Arm Bushing Fixture

1. New bushings (46) and the pivot shaft (50).
   - Use J 24435-4, J 24435-6 and J 24435-7 (figure 26).
   - Tighten the bolt on J 24435-7 to install the bushings.
   - Install one bushing, then insert the pivot shaft and install the remaining bushing.
   - Make sure J 24435-6 is in position to prevent collapsing the control arm.

- Stake the front busing in at least two places.

CAUTION: Failure to secure J 23028-01 to a suitable floor jack could result in personal injury.

2. Lower control arm (36) to the frame.
   - SLOWLY raise the floor jack until the front indexing hole in the pivot shaft (50) lines up with the crossmember attaching studs.
   - Do not damage the ball joint (37).
   - J 23028-01 is bolted to a suitable floor jack.
3. U-bolts (44), washers (48), and nuts (49).

Tighten

- U-bolt nuts (49) to 115 N•m (85 ft. lbs.).

4. Pivot shaft end nuts (24).

Tighten

- Nuts (24) to 95 N•m (70 ft. lbs.).

5. Stabilizer bar (59) to the lower control arm (28).
6. Washers (39 and 41), clamp (42), bolts (43) and nuts (38).

Tighten

- Nuts (38) to 34 N•m (25 ft. lbs.).

7. Shock absorber (20) to the lower control arm (36).
8. Washers (22), bolt (21) and nut (23).

Tighten

- Nut (23) to 81 N•m (60 ft. lbs.).

- Check the front end alignment and reset as required.
  - Refer to FRONT END ALIGNMENT (SEC. 3A).

9. Wheel and tire assembly.

- Lower the vehicle.

Remove or Disconnect (Figures 5 through 10)

- Raise the vehicle and support the frame so the control arms hang free.

1. Wheel and tire assembly.
2. Position an adjustable floor jack under the lower control arm (36) inboard of the spring and into the depression in the lower control arm.

Important

- Install a chain over the upper control arm (28) inboard of the stabilizer bar (59) and outboard of the shock absorber (20).

3. Nut (23), washer (22) and bolt (21).
4. Shock absorbers (20) from the lower control arm (36).
5. Nuts (38), washers (39 and 41), bolts (43) and clamp (42) (figure 12).
6. Stabilizer bar (59) from the lower control arm (36).
7. Nuts (49), washer (48) and U-bolts (44).
8. Lower control arm (36) from the frame crossmember.
   - SLOWLY lower the floor jack to access the pivot shaft (50).
9. Grease fittings (12).
10. Bushings (46) and pivot shaft (50).
    - Unscrew the bushings.
    - Slide the pivot shaft out of the lower control arm.
11. Inner seals (between the bushings and the pivot shaft).

Install or Connect (Figures 5 through 10 and 27)

NOTICE: For steps 3, 6, 8 and 10, see "Notice" on page 3C-1 of this section.

1. New seals onto the pivot shaft.
2. Pivot shaft into the lower control arm.
3. Bushings (46).
   - Center the shaft in the lower control arm (figure 27).

Tighten

- Bushings (46) to 379 N•m (280 ft. lbs.).

Inspect

- Pivot shaft (50) for free rotation.

4. Grease fitting (12).
   - Lubricate the bushings with recommended lubricant.
   - Refer to MAINTENANCE AND LUBRICATION (SEC. 0B).
5. Lower control arm (36) to the frame crossmember.
   - SLOWLY raise the floor jack until the lower control arm (36) is in position.

Important

- Be sure the hole in the pivot shaft mates with the bolt head in the frame crossmember saddle.

6. U-bolts (44), washers (48) and nuts (49).

Tighten

- Nuts (49) to 115 N•m (85 ft. lbs.).

7. Stabilizer bar (59) to the lower control arm (36).
8. Nuts (38), washers (39 and 41), bolts (43) and clamp (42) (figure 12).

Tighten

- Nuts (38) to 33 N•m (24 ft. lbs.).

9. Shock absorbers (20) to the lower control arm (36).

10. Bolt (21), washer (22) and nut (23).

Tighten

- R Models:
  - Bolt (21) to 80 N•m (59 ft. lbs.).
- P Models:
  - Nut (23) to 80 N•m (59 ft. lbs.).

- Remove the safety chain and the floor jack.

11. Wheel and tire assembly.

- Lower the vehicle.

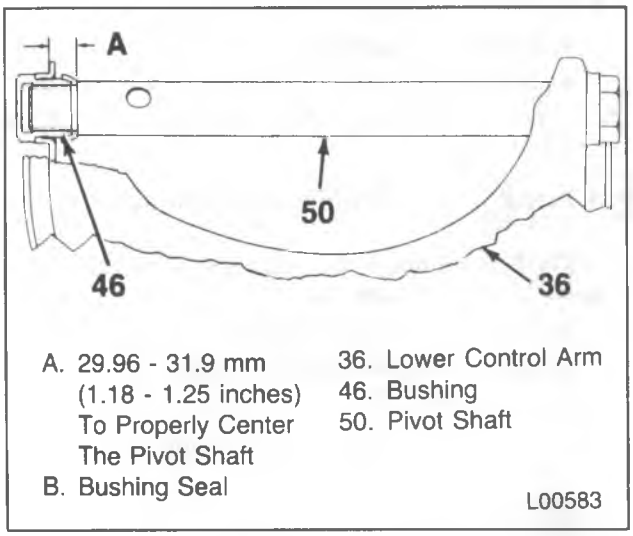

Figure 27 – Centering the Lower Control Arm Shaft (R-P2/25, 3/35)

UPPER

R1 Models

Remove or Disconnect (Figures 5 through 10)

Tools Required:

J 24435-1 Lower Control Arm Bushing Remover

J 24435-3 Lower Control Arm Bushing Remover

J 24435-7 Lower Control Arm Bushing Fixture

1. Upper control arm (28).
   - Refer to "Upper Control Arm Replacement" in this section.
2. Nuts (24), bushings (26) and the pivot shaft (29) from the upper control arm (28).
   - Use J 24435-1, J 24435-3 and J 24435-7.
   - Tighten J 24435-7 to remove the bushing (26).
   - Pivot shaft (29) can be pulled free at this time.
   - Repeat this procedure on the remaining bushing (26).

Install or Connect (Figures 5 through 13)

Tools Required:

J 24435-4 Lower Control Arm Bushing Installer

J 24435-5 Lower Control Arm Bushing Installer

J-24435-7 Lower Control Arm Bushing Fixture

1. Bushings (26) and the pivot shaft (29) into the upper control arm (28).
   - Use J 24435-4, J 24435-5 and J 24435-7.
   - Tighten J 24435-7 until the bushing (26) fully seats.
   - Slide the pivot shaft (29) into the upper control arm (28), then install the other bushing (26).

NOTICE: See "Notice" on page 3C-1 of this section.

2. Nuts (24) in place.

Tighten

- Nuts (24) to 156 N•m (115 ft. lbs.).

3. Upper control arm (28) to the crossmember.
   - Refer to "Upper Control Arm Replacement" in this section.
4. Caliper (if removed).
   - Refer to HYDRAULIC FOUNDATION BRAKES (SEC. 5A2).

- Check the front end alignment and reset as required.
  - Refer to FRONT END ALIGNMENT (SEC. 3A).
- Remove the supports and lower the vehicle.

R2, R3 AND P3 MODELS

Remove or Disconnect (Figures 5 through 10)

- Raise the vehicle and support the lower control arms with a floor jack positioned under or near the ball joint assembly.

1. Wheel and tire assembly.

- Loosen, but do not remove the pivot shaft to frame nuts (27).

2. Shim packs (18).
   - Tape each pack together and mark their position to ensure exact replacement during installation.
3. Pivot shaft to frame nuts (27), bolts (4) and spacers (19).
   - Do not allow the upper control arm (28) to swing too far from the frame crossmember.

Important

- Install a chain over the upper control arm (28) inboard of the stabilizer bar (59) and outboard of the shock absorber (20), to retain the upper control arm in a close relationship to the frame crossmember.

4. Pivot shaft (29) and bushings (26).
   - Unscrew the bushings (26).
   - Slide the pivot shaft (29) out of the upper control arm.
5. Grease fitting (12).
6. Inner seals (between the bushings and the pivot shaft).

Install or Connect (Figures 5 through 10 and 28)

NOTICE: For steps 3 and 6, see "Notice" on page 3C-1 of this section.

1. New inner seals onto the pivot shaft (29).
2. Pivot shaft (29) into position inside the upper control arm.
3. New bushings.
   - Do not tighten.
   - The pivot shaft (29) must be centered in the upper control arm (28) as shown in figure 28.

Tighten

- Bushings (26) to 257 N•m (190 ft. lbs.).

Inspect

- Pivot shaft for free rotation.

4. Grease fitting (12).
   - Grease the bushings (29). Refer to MAINTENANCE AND LUBRICATION (SEC. 0B).
5. Pivot shaft (29) to the frame.
6. Bolts (4), shim packs (18), spacers (19) and nuts (27).
   - Position shims in their original positions. Make sure the convex and concave sides of the shims are together.

Tighten

- Nuts (27) to 142 N•m (105 ft. lbs.).

- Remove the safety chain.

7. Wheel and tire assembly.

- Check the front end alignment and reset as required.
  - Refer to FRONT END ALIGNMENT (SEC 3A).
- Lower the vehicle.

LOWER CONTROL ARM REPLACEMENT

Remove or Disconnect (Figures 5 through 10 and 20)

Tool Required:

J 23742 Ball Joint Separator

- Raise the vehicle and support it with suitable safety stands.

1. Wheel and tire assembly.
2. Caliper.
   - Refer to HYDRAULIC FOUNDATION BRAKES (SEC. 5A2).
3. Coil spring (32).
   - Refer to "Coil Spring Replacement" in this section.
   - The lower control arm is separated from the frame.

- Use a jack to support the inboard end of the lower control arm (36).

4. Cotter pin (34), then loosen the nut (35) one turn.
5. Lower control arm (36) from the steering knuckle (31).
   - Install J 23742, with the large cup end over the upper ball joint nut (14). Extend threaded end until the ball joint stud loosens from the steering knuckle. Remove J 23742 and the nut (35).

Install or Connect (Figures 5 through 10)

1. Lower control arm (36) to the steering knuckle (31).
   - Position the lower control arm ball joint stud (37) into the steering knuckle (31).
2. Nut (35) onto the stud.
   - Do not tighten.
3. Coil spring (32).
   - Refer to "Coil Spring Replacement" in this section.
   - This step results with the lower control arm being attached to the frame.

NOTICE: See "Notice" on page 3C-1 of this section.

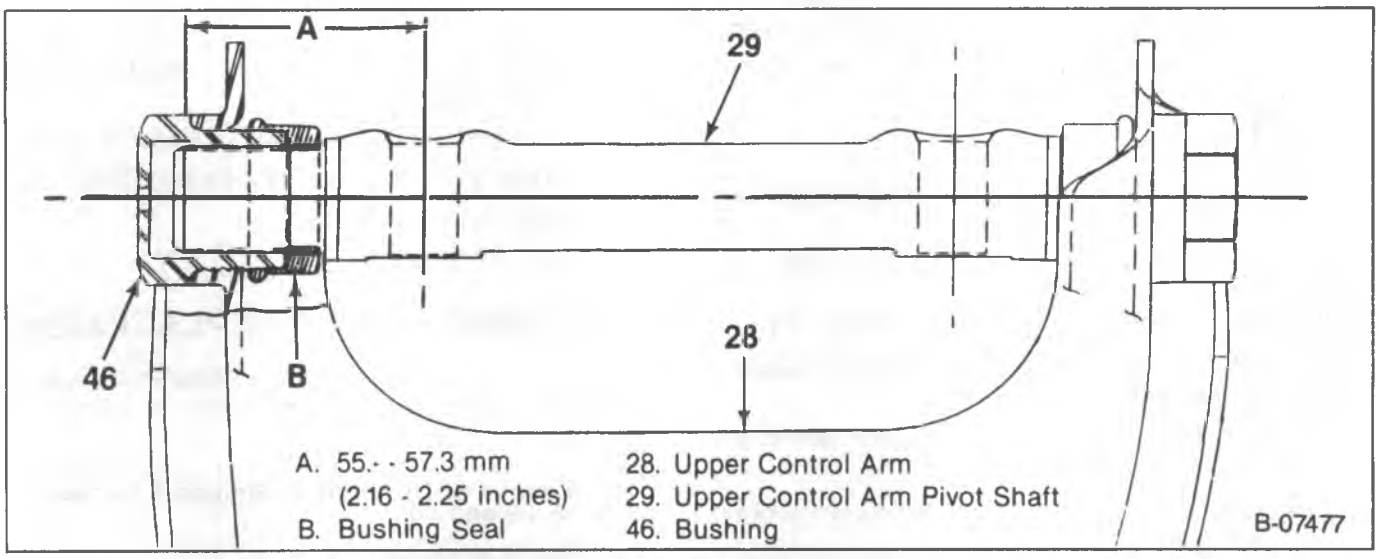

Figure 28—Centering the Upper Control Arm Shaft (R2, R3 and P3 Models)

4. Nut (35) and cotter pin (34).

Tighten

- Nut (35) to 122 N•m (90 ft. lbs.).
- Tighten the nut if needed to install the cotter pin.

Important

- Maximum torque to align the cotter pin is 175 N•m (130 ft. lbs.).

5. Caliper.
   - Refer to HYDRAULIC FOUNDATION BRAKES (SEC. 5A2).
- Check the front end alignment.
  - Refer to FRONT END ALIGNMENT (SEC. 3A).
6. Wheel and tire assembly and lower the vehicle.

UPPER CONTROL ARM REPLACEMENT

Remove or Disconnect (Figures 5 through 10 and 19)

Tool Required:

J 23742 Ball Joint Separator

- Raise the vehicle and support it with suitable safety stands. Remove the wheel and tire assembly. Place an adjustable jackstand under the lower control arm for support.

1. Caliper.
   - Refer to HYDRAULIC FOUNDATION BRAKES (SEC. 5A2).
2. Cotter pin (15).
3. Upper control arm (28) from the steering knuckle (31).
   - Loosen the nut (14), but do not remove it.
   - Install J 23742 with the large cupped end over the lower control arm ball joint stud nut (35). Expand J 23742 until the upper control arm separates.
   - Nut (14) from the upper ball joint stud and raise the upper control arm to clear the steering knuckle.
4. Nuts (27), spacers (19), shims (18), washers (5) and bolts (6).

Important

- Tape the shims together in their original positions and tag for proper relocation.

5. Upper control arm (28) from the frame bracket (9).

Install or Connect (Figures 5 through 10)

NOTICE: For steps 3 and 5, see "Notice" on page 3C-1 of this section.

1. Shims (18) into position on the upper control arm frame bracket (9).
   - Make sure the shims are positioned with concave and convex sides together.
2. Upper control arm (28) to the frame bracket (9).
3. Spacers (19) and nuts (27), washers (5) and bolts (6).

Important

- A normal shim pack will leave at least two threads of the bolt (6) exposed beyond the nut.
- If two threads cannot be obtained, check for damaged control arm or related parts. The difference between the front and rear shim packs must not exceed 7.62 mm (0.30 inches). The front shim pack must be at least 6.09 mm (0.24 inches).
- Always tighten the thinner shim pack's nut (27) first for improved shaft to frame clamping force and torque retention.

Tighten

- R1 models:
  - Nuts (27) to 95 N•m (70 ft. lbs.).
- All other models:
  - Nuts (27) to 142 N•m (105 ft. lbs.).

4. Upper control arm (28) to the steering knuckle (31).
   - Insert the upper control arm ball joint stud (13) into the steering knuckle (31).
5. Nut (14) and cotter pin (15).

Tighten

- R1 models:
  - Nut (14) to 68 N•m (50 ft. lbs.).
- All other models:
  - Nut (14) to 122 N•m (90 ft. lbs.).
- Tighten the nut if needed to install the cotter pin.

Important

- R1 models:
  - Maximum torque to align the cotter pin is 122 N•m (90 ft. lbs.).
- All other models:
  - Maximum torque to align the cotter pin is 175 N•m (130 ft. lbs.).

6. Caliper.
   - Refer to HYDRAULIC FOUNDATION BRAKES (SEC. 5A2).
- Check the front end alignment and reset as required.
  - Refer to FRONT END ALIGNMENT (SEC. 3A).
7. Wheel and tire assembly.
- Lower the vehicle.

SUSPENSION UNIT REPLACEMENT

The front suspension and frame crossmember can be removed or installed as a unit if extensive service is required.

Remove or Disconnect (Figures 5 through 10, 29 and 30)

- Raise the hood and disconnect the battery negative cable.

- Hoist the vehicle and support it with suitable safety stands placed at the frame side rails.

1. Wheel and tire assembly.

- Lower the hoist.

2. Front brake hose clip from each upper control arm.
3. Brake hoses from the calipers.
   - Clean the area adjacent to the brake hose fittings.
   - Discard the special washers (2 on each hose) and cover the disconnected ends of each hose with suitable material.
   - Refer to HYDRAULIC FOUNDATION BRAKES (SEC. 5A2).
4. Tie rod ends from the steering knuckle (31).
   - Refer to STEERING LINKAGE (SEC. 3B3).
5. Nuts (38), washers (39 and 41), bolts (43) and clamps (42) (figure 12).
6. Front stabilizer from the lower control arms (36).
7. Nut (23), washer (22) and bolt (21).
8. Shock absorbers (20) from the lower control arms (36).

NOTICE: Failure to disconnect the brake line clips from the suspension unit will result in severe damage to the brake line when the unit is lowered from the vehicle.

9. Brake line clip bolts from the front suspension crossmember.
   - On R Models the clip is located under the right side engine mount support bracket.
10. Suspension crossmember from the engine mounts.
    - Refer to ENGINE (SEC. 6).
11. Suspension crossmember from the frame rail (figure 29).

- Raise the hoist to support the suspension crossmember.
- Support the engine.
  - This must be done before the suspension unit is lowered from the vehicle.

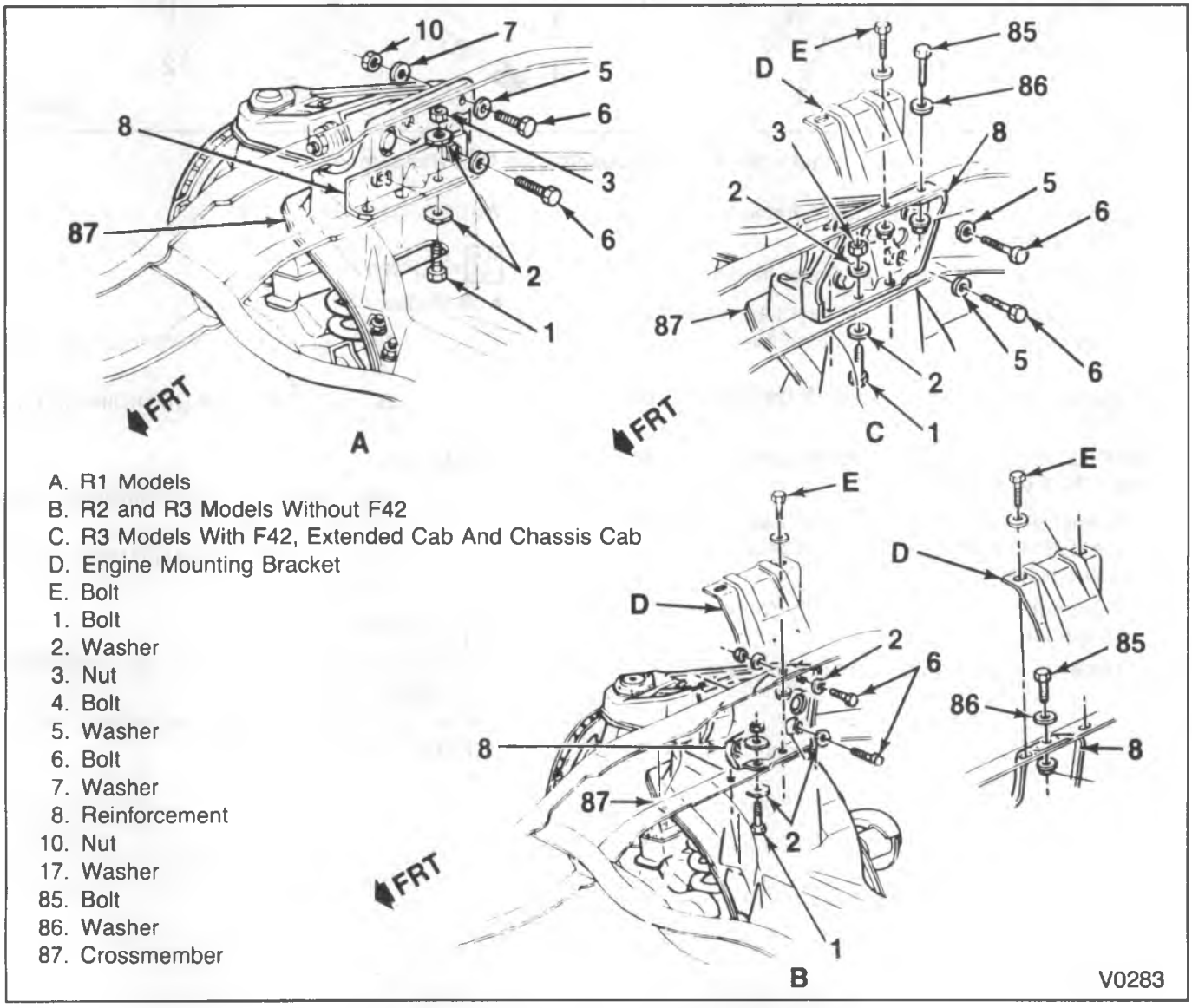

Figure 29 – R Model Suspension Unit Attachment

A. P-3 Commercial Models
B. P3 Motorhome
D. Engine Mounting Bracket
E. Bolt

1. Bolt
2. Washer
5. Washer
6. Bolt
7. Washer

8. Reinforcement
10. Nut
85. Bolt
86. Washer
87. Crossmember

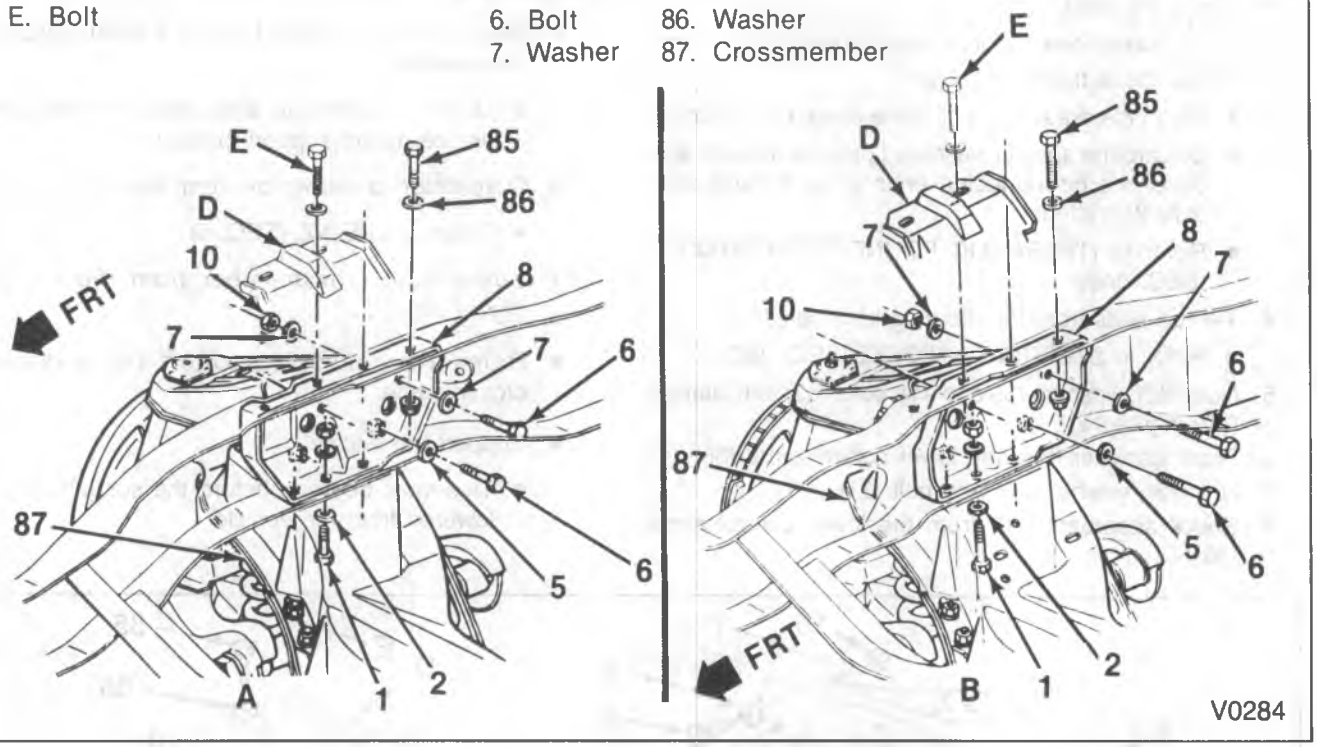

Figure 30 – P Model Suspension Unit Attachment

12. Upper control arm bracket to the frame side rail nuts (10), washer (7) and bolts (6).
13. Suspension unit and crossmember from the vehicle.
    - Lower the suspension unit and the crossmember to bring the unit clear of the vehicle.

Install or Connect (Figures 5 through 10, 29 and 30)

NOTICE: For steps 4, 6, 10 and 12, see "Notice" on page 3C-1 of this section.

1. Suspension unit and crossmember and raise it with the hoist to align the suspension crossmember and frame holes.
2. Suspension crossmember to frame rail bolts (figure 29).
3. Upper control arm (28) and frame bracket bolts (6).
4. Washers (7) and nuts (10).

Tighten

- R Models:
  - Bolts (6) to 87 N•m (64 ft. lbs.); except R3 with F42.
  - Bolts (6) to 135 N•m (100 ft. lbs.); R3 with F42.
- P Models:
  - Bolts (4 and 6) to 87 N•m (64 ft. lbs.); except P3 motorhome
  - Bolts (4 and 6) to 135 N•m (100 ft. lbs); P3 motorhome.

Important

- The upper control arm to frame bracket bolts must be tightened first.
- The crossmember must be in contact with the frame side rails.

5. Crossmember to frame bolts (1) through the reinforcement (8).
6. Washers (2) and nuts (3) as used.

Tighten

- R3 models with F42:
  - Nut (3) to 180 N•m (133 ft. lbs.).
- P3-Motorhome:
  - Bolt (1) to 290 N•m (214 ft. lbs.).
- All other models:
  - Bolt (1) to 125 N•m (92 ft. lbs.).

7. Engine mount support bracket to the suspension crossmember bolts.

- Remove the engine support and lower the hoist.
  - Refer to ENGINE (SEC. 6).

8. Brake line clip to the crossmember.
   - Refer to HYDRAULIC FOUNDATION BRAKES (SEC. 5A2).
9. Shock absorber to the lower control arm (28).
10. Washers (22), nuts (23) and bolts (21).

Tighten

- R Models:
  - Bolt (21) to 80 N•m (59 ft. lbs.).
- P Models:
  - Nut (23) to 80 N•m (59 ft. lbs.).

11. Stabilizer bar (59) to the lower control arm (28).
12. Clamps (42), bolts (43), washers (39) and nuts (38) (figure 12).

Tighten

- R and P Models:
  - Nuts (38 and 58) to 33 N•m (24 ft. lbs.).

13. Tie rod ends to the steering knuckle (31).
    - Refer to STEERING LINKAGE (SEC. 3B3).
14. Brake hose to the caliper.
    - Refer to HYDRAULIC FOUNDATION BRAKES (SEC. 5A2).
15. Brake hose clips to the upper control arms.
    - Refer to HYDRAULIC FOUNDATION BRAKES (SEC. 5A2).

- Bleed the brake system.
  - Refer to HYDRAULIC FOUNDATION BRAKES (SEC. 5A2).

16. Wheel and tire assembly.

- Lower the vehicle.

17. Negative battery cable.

ON-VEHICLE SERVICE: I-BEAM (RPO FS3) FRONT SUSPENSION

SHOCK ABSORBER REPLACEMENT

Remove or Disconnect (Figures 31 through 33)

- Raise the vehicle and support it with suitable safety stands.

1. Wheel and tire assembly.
2. Nut (109) and washer (111).
3. Shock absorber (113) from the leaf spring spacer (158).
4. Nut (109) and washer (111).
5. Shock absorber (113) from the frame.

Inspect

- Shock absorbers for damage and leakage.
- Test the shock absorbers. Refer to "Shock Absorber Bench Test" in this section.

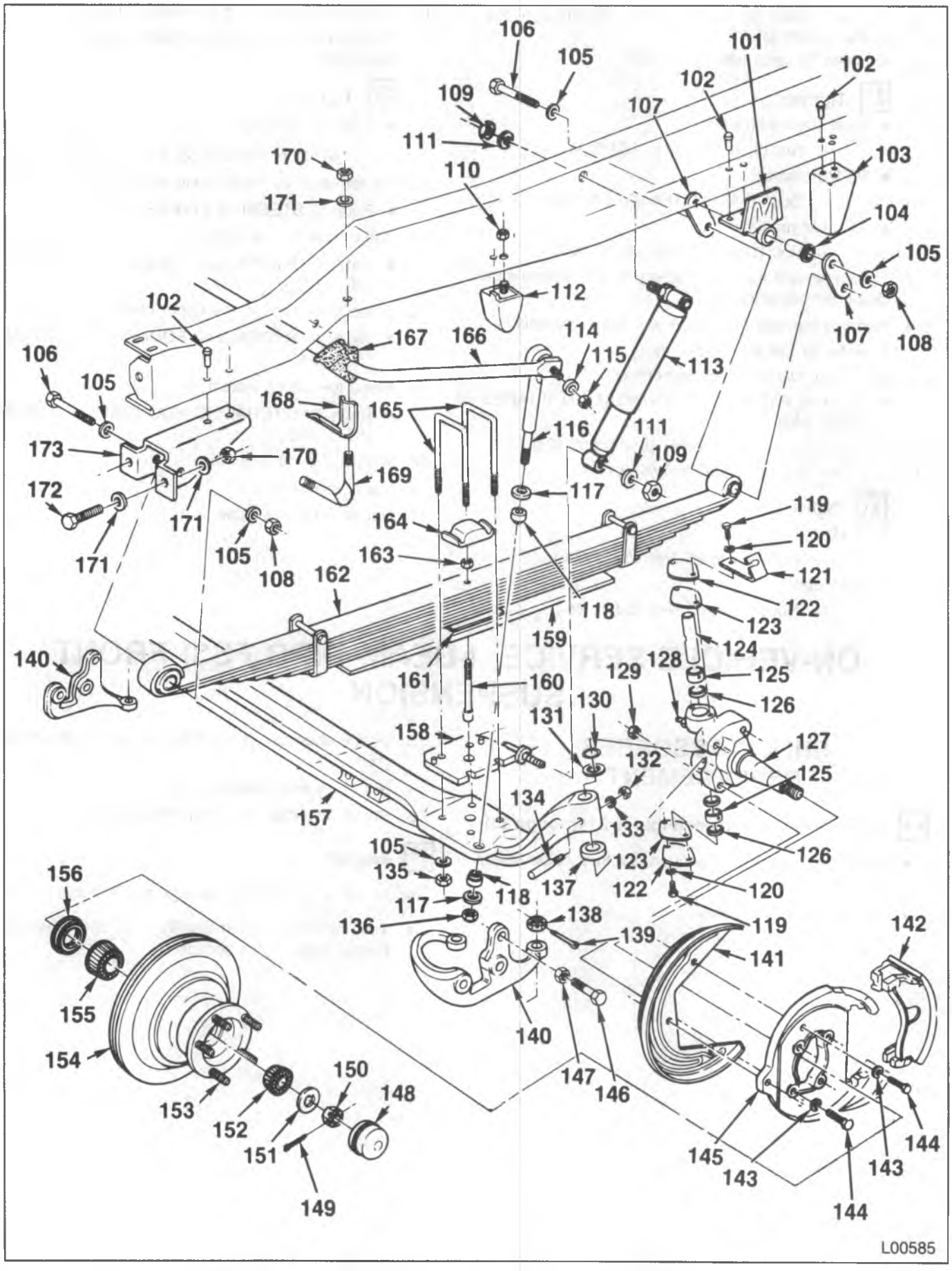

Figure 31 – P Model I-Beam Front Suspension Components

101. Spring Hanger
102. Rivet
103. Spring Stop
104. Hanger Bushing
105. Washer
106. Bolt
107. Shackle
108. Nut
109. Nut
110. Nut
111. Washer
112. Bumper
113. Shock Absorber
114. Washer
115. Nut
116. Stabilizer Link
117. Retainer
118. Insulator
119. Bolt
120. Washer
121. Brake Hose Bracket
122. Cap
123. Gasket
124. King Pin
125. Bushing
126. Spacer
127. Steering Knuckle
128. Fitting
129. Nut
130. Dust Seal
131. Shim
132. Nut
133. Washer
134. Lock Pin
135. Nut
136. Nut
137. Thrust Bearing
138. Nut
139. Cotter Pin
140. Steering And Third Arm
141. Splash Shield
142. Brake Caliper
143. Washer
144. Bolt
145. Anchor Plate
146. Stop Bolt
147. Stop Nut
148. Retainer/Cap
149. Cotter Pin
150. Nut
151. Washer
152. Outer Wheel Bearing And Race
153. Wheel Hub Bolt
154. Hub/Rotor
155. Inner Wheel Bearing And Race
156. Bearing Seal
157. Front Axle
158. Spring Spacer
159. Spring Leaf
160. Bolt
161. Spacer
162. Front Spring
163. Nut
164. Spacer
165. U-Bolt
166. Stabilizer Bar
167. Insulator
168. Clamp
169. Bolt
170. Nut
171. Washer
172. Bolt
173. Spring Hanger

L00586

Figure 32—P Model I-Beam Front Suspension Components

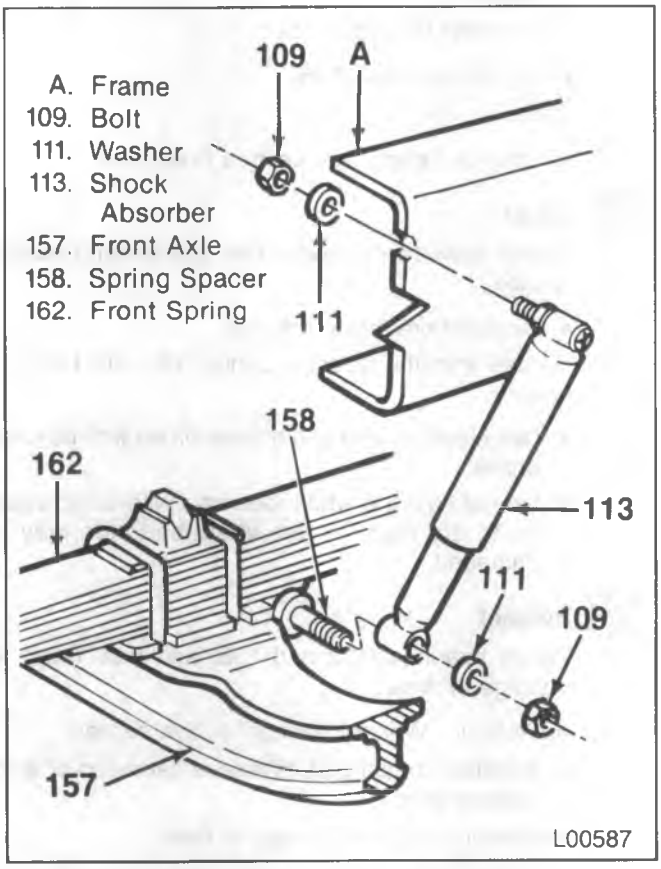

Figure 33—Shock Absorber Attachment Points

Install or Connect (Figures 31 and 33)

1. Shock absorber (113) to the frame (figure 33).
   - Insert the upper stud into the hole in the frame.
2. Washer (111) and nut (109).
   - Do not tighten.
3. Shock absorber (113) to the leaf spring spacer (158) (figure 33).
   - Position the lower shock mount onto the stud.

NOTICE: See "Notice" on page 3C-1 of this section.

4. Washer (111) and nut (109).

   Tighten
   - Shock absorber upper nut to 185 N•m (136 ft. lbs.).
   - Shock absorber lower nut to 50 N•m (37 ft. lbs.).
5. Wheel and tire assembly.

- Lower the vehicle.

STABILIZER SHAFT REPLACEMENT

Remove or Disconnect (Figures 31, 32, 34 and 35)

Tool Required:

J 6627-A Tie Rod Remover

- Raise the vehicle and support it with suitable safety stands.

1. Wheel and tire assembly.

2. Nut (115) and washer (114).
3. Stabilizer bar (166) from the stabilizer link (116).
   - Use J 6627-A to separate the stabilizer link from the stabilizer end (figure 34).
4. Nuts (170), washers (171), clamp bolts (169) and clamps (168).
5. Stabilizer bar (166) from the frame (figure 35).
6. Insulator (167) from the stabilizer bar (166).
7. Nut (136), retainer (117) insulator (118).
8. Stabilizer link (116) from the front axle (157) (figure 35).
   - Pull the link from the axle. Another insulator (118) and retainer (117) will come off the link.

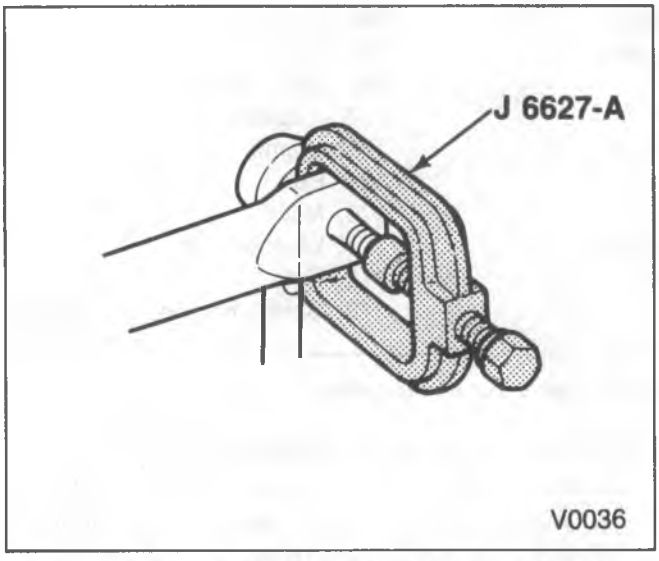

Figure 34 – Removing Stabilizer Link from Stabilizer End

Install or Connect (Figures 31, 32, and 35)

NOTICE: For steps 2, 5 and 7, see "Notice" on page 3C-1 of this section.

1. Stabilizer link (116) to the front axle (157) (figure 35).
   - Slide a retainer (117) and an insulator (118) on to the link and insert the link into the proper hole in the front axle.
2. Insulator (118), retainer (117) and nut (136).

   Tighten
   - Nut (136) until the distance between each retainer (117) is 52.8 mm (2.08 inches) (figure 35).
3. Stabilizer bar (166) to the frame (figure 35).
4. Insulators (167) onto the stabilizer bar (166).
5. Clamps (168), clamp bolts (169), washers (171) and nuts (170).

   Tighten
   - Nuts (170) to 28 N•m (21 ft. lbs.).
6. Stabilizer bar (166) to the stabilizer link (116).
7. Washer (114) and nut (115).

   Tighten
   - Nuts (115) to 68 N•m (50 ft. lbs.).
8. Wheel and tire assembly.

- Lower the vehicle.

WHEEL HUB/ROTOR ASSEMBLY REPLACEMENT

Remove or Disconnect (Figures 31 and 32)

- Raise the vehicle and support it with suitable safety stands.

1. Wheel and tire assembly.

NOTICE: Support the caliper with a piece of wire to prevent damage to the brake line.

2. Caliper (142).
   - Refer to HYDRAULIC FOUNDATION BRAKES (SEC. 5A2).
3. Retainer/cap (148).
4. Cotter pin (149), nut (150) and washer (151).
5. Wheel hub/rotor (154) (figures 31 and 32).
   - Pull the hub/rotor free from the spindle, making sure the outer wheel bearing (152) comes free.
   - Do not damage the steering knuckle spindle threads.
6. Inner wheel bearing (155).
   - Pry out the seal (156).
7. Races.
   - Drive out each race using a brass drift.

Clean

1. Grease from the hub/rotor (154) and steering knuckle spindle.
   - Grease from inside the hub.
2. Grease from the wheel bearings (152 and 155) and races.
   - Use clean solvent and a small brush with no loose bristles.
   - Do not spin the wheel bearings with compressed air to dry them – the wheel bearings may be damaged.

Inspect

1. Wheel bearings (152 and 155) and their races for damage or wear.
   - Refer to "Wheel Bearings" in this section.
   - If either a bearing or its race is damaged or worn, replace both.
2. Hub/rotor (154) for damage or wear.
   - Check for out-of-round or scored conditions.
   - Check for pitting or cracks.
   - Repair or replace as necessary.

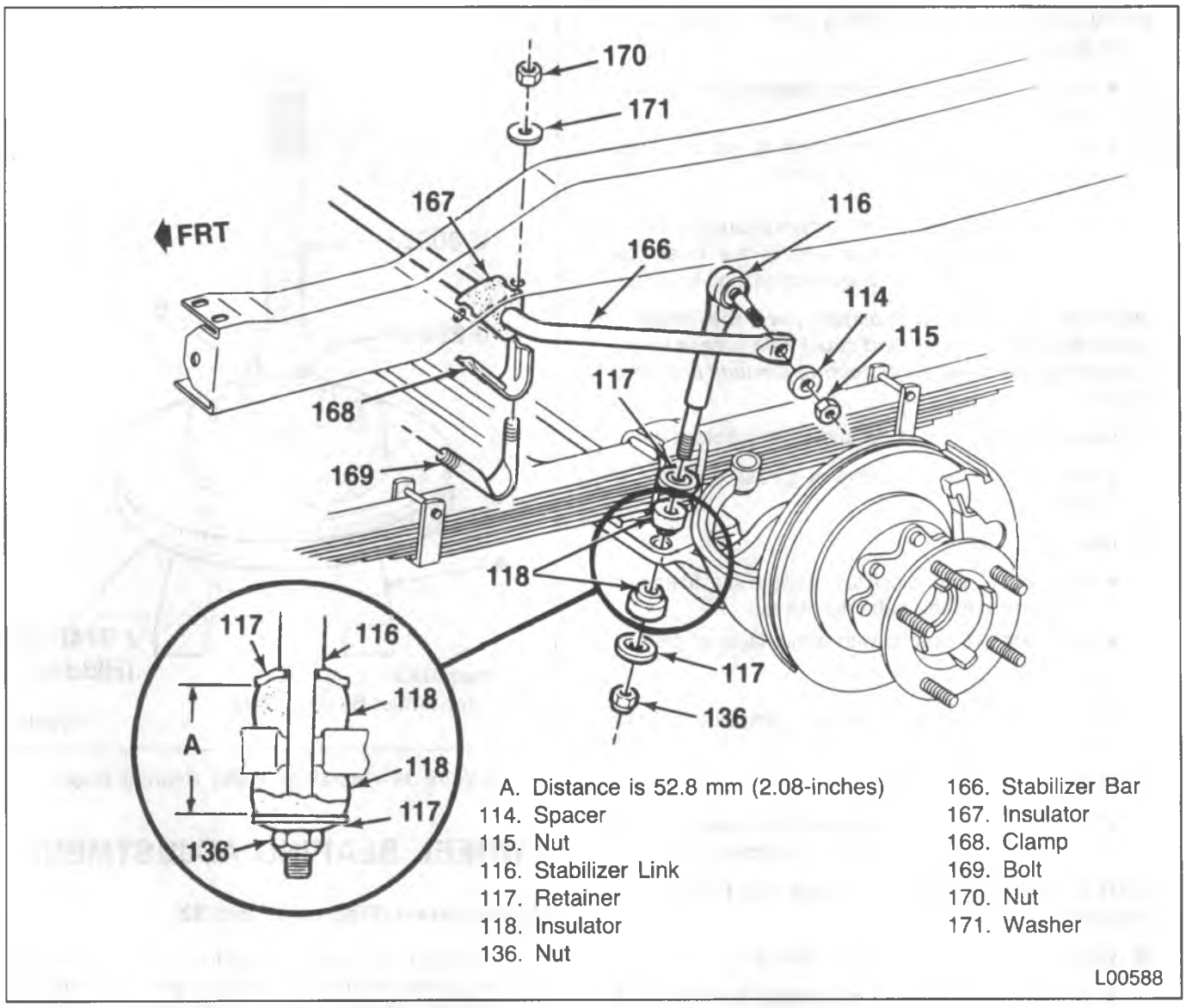

Figure 35 – Stabilizer Shaft Attachment Points

Install or Connect (Figures 31, 32 and 36)

Tools Required:

J 8092 Driver Handle

J 29040 Outer Bearing Race Installer

J 9746-02 Hub/Rotor Support

NOTICE: Start the races squarely inside the hub/rotor (154) to avoid distortion and possible cracking.

1. Races into the hub/rotor (154).
   - Place the hub/rotor on J 9746-02 and rest this assembly on press bars.
   - Use J 29040 to drive the outer bearing race into position.
   - Remove J 9746-02 and use a 7.6 cm (3 inch) diameter bar to drive the inner bearing race into position. If the bar is larger than 7.6 cm (3 inches), it may damage the bearing seal seat.

Important

- Use an approved high temperature front wheel bearing grease to lubricate the bearings. Refer to MAINTENANCE AND LUBRICATION (SEC. 0B).
- Do not mix different greases as mixing may change the grease's properties resulting in poor performance.

2. Apply a thin film of grease to the steering knuckle spindle at the outer wheel bearing seat and at the inner wheel bearing seat, shoulder, and seal seat.
3. Put a small quantity of grease inboard of each wheel bearing retainer/cap (148).

4. Fill each wheel bearing (cone and roller assembly) full of grease.
   - Use a cone-type grease machine that forces grease into the bearing.
   - If a cone-type grease machine is not available, pack the wheel bearing by hand.
     - When packing the wheel bearing by hand, work the grease into the bearings between the rollers, cones, and the cage.

NOTICE: Failure to completely pack the wheel bearing (cones, rollers, and cage) with grease will result in premature wheel bearing damage and/or wear.

5. Inner wheel bearing (155) into the hub/rotor (154).
   - Put an additional quantity of grease outboard of this bearing.
6. New seal (156).
   - Use a flat plate or block to install the seal to ensure it is flush with the hub/rotor flange.
   - Lubricate the seal lip with a thin layer of grease.
7. Hub/rotor (154).
   - Do not damage the steering knuckle spindle threads.
8. Outer wheel bearing (152).
   - Slide it over the spindle until the wheel bearing (152) fully seats against the hub/rotor outer race.

NOTICE: See "Notice" on page 3C-1 of this section.

9. Washer (151), nut (150) and cotter pin (149).
   - Do not place the cotter pin through the hole in the spindle until the wheel bearings are adjusted.

Tighten

- Nut (150) to 16 N•m (12 ft. lbs.) while turning the hub/rotor assembly in either direction.

- Put an additional amount of grease outboard of the wheel bearing (152).
- Adjust the wheel bearings.
  - Refer to "Wheel Bearing Adjustment" in this section.

10. Retainer/cap (148) in place.
11. Caliper (142).
    - Refer to HYDRAULIC FOUNDATION BRAKES (SEC. 5A2).
12. Wheel and tire assembly.

- Lower the vehicle.

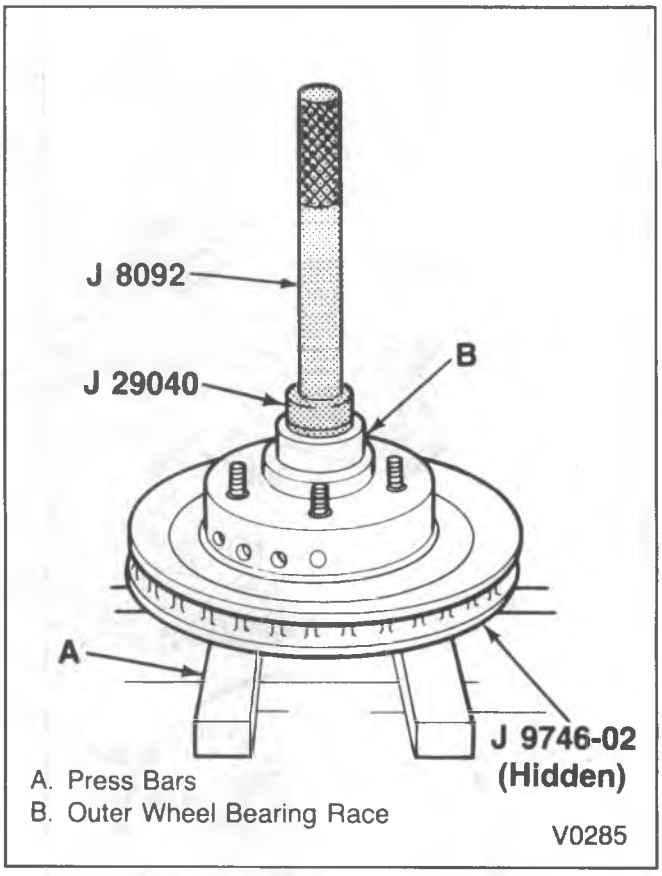

Figure 36—Installing Outer Bearing Race

WHEEL BEARING ADJUSTMENT

Important (Figures 31 and 32)

- The proper functioning of the front suspension cannot be maintained unless the front wheel bearings are correctly adjusted. The bearings must be a slip fit on the spindle and the inside diameter of the wheel bearing must be lubricated to ensure the bearings will creep. The spindle nut (150) must have a free-running fit on the spindle threads.

NOTICE: Never preload the front wheel bearings. Damage can result by the steady thrust on the roller ends which comes from preloading.

Adjust

- Raise the vehicle and support it with suitable safety stands under the lower control arms.

1. Remove the retainer/cap (148).
2. Remove the cotter pin (149).

Tighten

- Nut (150) to 16 N•m (12 ft. lbs.) while rotating the wheel and tire assembly (or the hub/rotor); this will seat the bearings.

3. Back off the nut (150) one flat.
   - If the hole in the spindle lines up with the slot in the nut, insert the cotter pin (149).
   - If they do not line up, back off the nut until they do – not more than one additional flat.

Measure

- Endplay in the hub/rotor should measure between 0.013-0.20 mm (0.0005-0.008 inches) when properly adjusted. See figure 14.

4. Install the retainer/cap (148).

- Lower the vehicle.

WHEEL HUB BOLT REPLACEMENT

Remove or Disconnect (Figure 17)

Tool Required:

J 9746-02 Hub/Rotor Support

1. Hub/rotor assembly from the vehicle.
   - Refer to "Wheel Hub/Rotor Assembly Replacement" in this section.

NOTICE: Place J 9746-02 between the press bars and the hub/rotor to protect the rotor surfaces.

2. Wheel hub bolts (153) with a press (figure 17).
   - Support the hub/rotor (153) using J 9746-02 and the press bars.
   - Do not damage the wheel mounting surface on the hub/rotor flange.

Install or Connect (Figure 18)

NOTICE: See "Notice" on page 3C-1 of this section.

1. Wheel hub bolts (153) into the hub/rotor (154).
   - Place four washers onto the bolt, then fasten a nut onto the bolt until the nut bottoms on the washers (figure 18).
   - Tighten the nut until the bolt fully seats into the hub/rotor (154).
   - Remove the nut and washers.
2. Hub/rotor to the vehicle.
   - Refer to "Wheel Hub/Rotor Assembly Replacement" in this section.
3. Wheel and tire assembly.

- Lower the vehicle.

STEERING ARM, KNUCKLE AND SPINDLE REPLACEMENT

Remove or Disconnect (Figures 31 and 32)

- Raise the vehicle and support it with suitable safety stands.

1. Wheel and tire assembly.
2. Caliper (142).
   - Refer to HYDRAULIC FOUNDATION BRAKES (SEC. 5A2).
3. Hub/rotor assembly (154).
   - Refer to "Wheel Hub/Rotor Assembly Replacement" in this section.
4. Bolts (146), washers (147) and nuts (129).
5. Anchor plate (145), splash shield (141) and the steering arm (140).
   - Pull the anchor plate and splash shield off the knuckle. Steering arm hangs by tie rods.
   - Bolts (144) and washers (143) to separate the anchor plate from the splash shield.
   - Refer to STEERING LINKAGE (SEC. 3B3) to separate the steering arm from the tie rod and pitman arm.
6. Bolts (119) and washers (120).
7. Brake hose bracket (121).
8. Gaskets (123).
9. Caps (122) from the steering knuckle (127).
10. Nut (132) and washer (133).
11. Lock pin (134).
12. King pin (124) from the steering knuckle (127).
    - Drive it out using a drift.
    - Spacers (126) and bushings (125) will also come out.
13. Steering knuckle (127) from the axle (157).
14. Dust seal (130), shim (131) and thrust bearing (137).

Install or Connect (Figures 31 and 32)

NOTICE: For steps 5, 9 and 12, see "Notice" on page 3C-1 of this section.

1. Bushings (125).
   - Ream new bushings to 29.982-30.022 mm (1.1804-1.1820 in.) after installing.
2. Steering knuckle (127).
3. Thrust bearing (137), shim and dust seal.
   - Prelube the thrust bearing. Refer to MAINTENANCE AND LUBRICATION (SEC. 0B).
4. King pin (124) and the lock pin (134).
   - Prelube the king pin.
   - Insert the spacers in the proper order.
5. Washer (133) and nut (132).

   Tighten

   - Nut (132) to 40 N•m (29 ft. lbs.).
6. Gaskets (123).
7. Caps (122) to the steering knuckle (127).
8. Brake hose bracket (121).
9. Washers (120) and bolts (119).

   Tighten

   - Bolts (119) to 7 N•m (5 ft. lbs.).
10. Steering arm (140), splash shield (141) and anchor plate (145).
11. Bolts (144) and washers (143) to attach splash shield to anchor plate.

12. Bolts (146), washers (147) and nuts (129) to attach anchor plate and steering arm to the steering knuckle.

Tighten

- Bolts (144) to 16 N•m (12 ft. lbs.).
- Nuts (129) to 312 N•m (230 ft. lbs.).

13. Steering arm (140) to the steering linkage.
    - Refer to STEERING LINKAGE (SEC. 3B3).
14. Hub/rotor assembly (154).
    - Refer to "Wheel Hub/Rotor Assembly Replacement" in this section.

- Adjust the wheel bearings.
  - Refer to "Wheel Bearing Adjustment" in this section.

15. Caliper (142).
    - Refer to HYDRAULIC FOUNDATION BRAKES (SEC. 5A2).
16. Wheel and tire assembly.

- Lower the vehicle.
- Check the front end alignment and reset as required.
  - Refer to FRONT END ALIGNMENT (SEC. 3A).

FRONT AXLE REPLACEMENT

Remove or Disconnect (Figures 31 through 33, 35 and 37)

Tool Required:

J 6627-A Tie Rod Remover

- Raise the vehicle and support it with suitable safety stands on the frame.

1. Wheel and tire assembly.

- Support the axle with a floor jack to eliminate any load on the springs.

2. Steering arm, knuckle and spindle.
   - Refer to "Steering Arm, Knuckle and Spindle Replacement" in this section.
3. Nut (109) and washer (111).

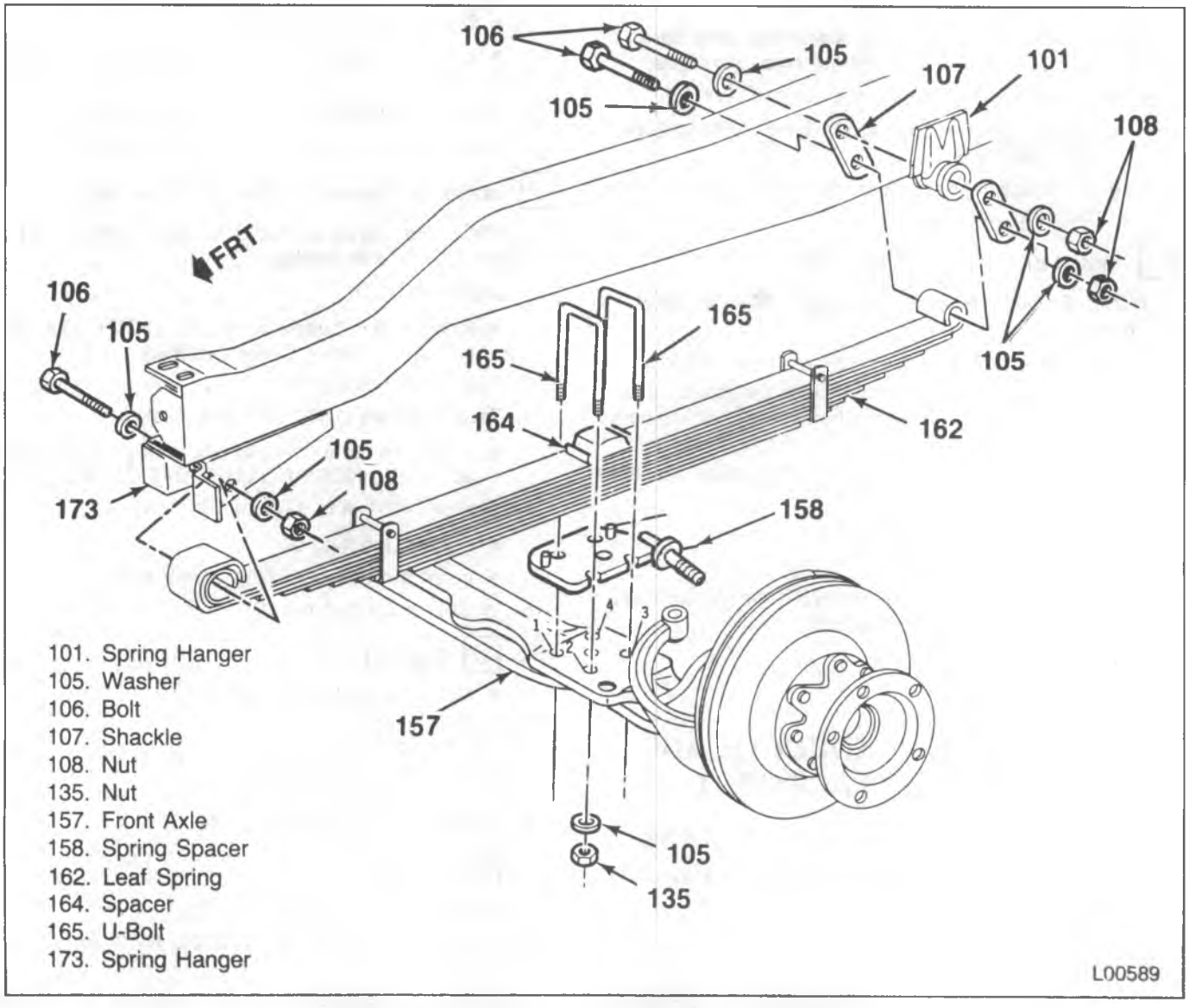

Figure 37—Axle and Leaf Spring Attachment Points

4. Shock absorber (113) from the axle (157) (figure 33).
5. Nut (115) and washer (114).
6. Stabilizer link (116) from the stabilizer bar (166) (figure 34).
   - Use J 6627-A to separate the stabilizer bar from the stabilizer link.
7. Nut (136), retainer (117) and insulator (118).
8. Stabilizer link (116) from the axle (157) (figure 35).
   - Pull the link free from the axle, making sure not to lose the other insulator (118) and retainer (117).
9. Nuts (135), washers (105) and U-bolts (165).
10. Spacer (164) and spring spacer (158).
11. Leaf spring (162) from the axle (175) (figure 37).
12. Steering damper from the axle.
    - Refer to STEERING LINKAGE (SEC. 3B3).

- Lower the floor jack and pull the axle clear of the vehicle.

Install or Connect (Figures 31 through 33, 35 and 37)

NOTICE: For steps 5, 7 and 9, see "Notice" on page 3C-1 of this section.

- Line up the axle under the leaf springs.
  - Raise it into position using a floor jack.

1. Steering damper to the axle.
   - Refer to STEERING LINKAGE (SEC. 3B3).
2. Axle (157) to the leaf springs (162).
   - Refer to "Leaf Spring Replacement" in this section.
3. Stabilizer link (116) to the axle (175) (figure 35).
4. Link into the hole on the spring spacer (158) and axle.
5. Insulator (118), retainer (117) and nut (136).

   Tighten
   - Nut (136) until the distance between each retainer (117) is 52.8 mm (2.08 inches) (figure 35).
6. Stabilizer link to the stabilizer bar (166) (figure 35).
7. Washer (114) and nut (115).

   Tighten
   - Nut (115) to 68 N•m (50 ft. lbs.).
8. Shock absorber (113) to the axle (157) (figure 33).
9. Washer (111) and nut (109).

   Tighten
   - Nut (109) to 50 N•m (37 ft. lbs.).
10. Steering arm, knuckle and spindle.
    - Refer to "Steering Arm, Knuckle and Spindle Replacement" in this section.

- Adjust the wheel bearings.
  - Refer to "Wheel Bearing Adjustment" in this section.

11. Wheel and tire assembly.

- Lower the vehicle.
- Check the front end alignment and reset as required.
  - Refer to FRONT END ALIGNMENT (SEC. 3A).

LEAF SPRING REPLACEMENT

Remove or Disconnect (Figures 31 through 33, 35 and 37)

Tool Required:

J 6627-A Tie Rod Remover

- Raise the vehicle and support it with suitable safety stands. Support the axle separately to eliminate any load on the springs.

1. Wheel and tire assembly.
2. Nut (109) and washer (111).
3. Shock absorber (113) from the axle (157) (figure 33).
4. Nut (115) and washer (114).
5. Stabilizer link (116) from the stabilizer bar (166) (figure 35).
   - Use J 6627-A to separate the stabilizer bar from the stabilizer link.
6. Nut (136), retainer (117) insulator (118).
7. Stabilizer link (116) from the axle (157) (figure 35).
   - Pull the link free from the axle, making sure not to lose the other insulator (118) and retainer (117).
8. Nuts (135), washers (105) and U-bolts (165).
9. Spacer (164) and spring spacer (158).
10. Leaf spring (162) from the axle (157) (figure 37).
11. Nut (108), washer (105), bolt (106) and washer (105) to separate the spring from the rear shackle (107).
12. Nut (108), washer (105), bolt (106) and washer (105) to separate the spring from the front hanger (173).
    - Pull the leaf spring backward and out.
13. Leaf spring (162) from the frame (figure 37).

Install or Connect (Figures 31 through 33, 35 and 37)

NOTICE: For steps 3, 5, 7, 9 and 11, see "Notice" on page 3C-1 of this section.

1. Leaf spring (162) to the frame (figure 37).
   - Line up the spring with the rear shackle (107) and the spring hanger (173). Double wrap end is toward the front of the vehicle.
2. Washer (105), bolt (106), washer (105) and nut (108) to attach the spring to the front hanger (173).
3. Washer (105), bolt (106), washer (105) and nut (108) to attach the spring to the rear shackle (107).

   Tighten
   - Nut (108) to 125 N•m (92 ft. lbs.).
4. Leaf spring (162) to the axle (157) (figure 37).
   - Position the spring spacer (158) onto the axle. Either aligning pin can contact the edge of the leaf spring after the assembly is complete.
5. Spacer (164), U-bolts (165), washers (105) and nuts (135).

   Tighten
   - Nuts (135) to 25 N•m (18 ft. lbs.) in a diagonal sequence (e.g., 1-3-4-2).
   - Nuts (135) in a diagonal sequence (e.g., 1-3-4-2) to 109 N•m (80 ft. lbs.).

6. Stabilizer link (116) to the axle (157) (figure 35).
   - Insert the link into the proper hole in the axle after the retainer (117) and insulator (118) are attached.
7. Insulator (118), retainer (117) and nut (136).

Tighten

- Nut (136) until the distance between each retainer (117) is 2.08 cm (0.82 inches) (figure 35).

8. Stabilizer link (116) to the stabilizer bar (166) (figure 35).
9. Washer (114) and nut (115).

Tighten

- Nut (115) to 68 N•m (50 ft. lbs.).

10. Shock absorber (113) to the axle (157) (figures 31, 32 and 33).
11. Washer (111) and nut (109).

Tighten

- Nut (109) to 50 N•m (37 ft. lbs.).

12. Wheel and tire assembly.

- Lower the vehicle.
- Check the front end alignment and reset as required.
  - Refer to FRONT END ALIGNMENT (SEC. 3A).

ON-VEHICLE SERVICE: FOUR WHEEL DRIVE FRONT SUSPENSION

SHOCK ABSORBER REPLACEMENT

Remove or Disconnect (Figures 38 through 40)

- Raise the vehicle on a hoist.

1. Nut (212), washer (213) and bolt (219).
2. Shock absorber (220) from the frame.
3. Nut (212), washer (213) and bolt (225).
4. Shock absorber (220) from the axle.
   - Quad shocks (RPO Z75) have a spacer (246) between them (figure 40).

Inspect

- Shock absorbers for damage and leaking.
- Test the shock absorbers. Refer to "Shock Absorber Bench Test" in this section.

Install or Connect (Figures 38 and 39)

NOTICE: For steps 2 and 4, see "Notice" on page 3C-1 of this section.

1. Shock absorber (220) to the axle.
2. Bolt (225), washer (213) and nut (212).
   - Spacer (246) must be positioned between the shock absorbers (220) on vehicles with quad shocks (RPO Z75) (figure 40).

Tighten

- Nut (212) to 88 N•m (65 ft. lbs.).
- Nut (212) to 120 N•m (89 ft. lbs.) on quad shocks (RPO Z75).

3. Shock absorber (220) to the frame.
4. Bolt (219), washer (213) and nut (212).

Tighten

- Nut (212) to 88 N•m (65 ft. lbs.).

- Lower the vehicle to the floor.

STABILIZER SHAFT REPLACEMENT

Remove or Disconnect (Figures 38, 39 and 41)

- Raise the vehicle on a hoist.

1. Nuts (231), washers (232), brackets (233) and bolts (238) (figure 38).
2. Stabilizer bar (230) from frame brackets (237).
3. Bolts (229) and washers (228).
4. Stabilizer bar (230) from spring plate (224).
5. Bushings (234) from the stabilizer bar.

Install or Connect (Figures 38, 39 and 41)

1. Bushings (234) onto the stabilizer bar.
   - Use rubber lubricant when installing the bushings (slit faces forward) on the stabilizer bar.
2. Stabilizer bar (230) to frame brackets (237).
3. Brackets (233), bolts (238), washers (232) and nuts (231) (figure 38).
   - Do not tighten.
4. Stabilizer bar (230) to spring plate (224).

NOTICE: See "Notice" on page 3C-1 of this section.

5. Washers (228) and bolts (229) (figure 41).

Tighten

- Nuts (231) to 70 N•m (52 ft. lbs.).
- Bolts (229) to 180 N•m (133 ft. lbs.).

- Lower the vehicle.

WHEEL HUB/ROTOR ASSEMBLY REPLACEMENT

Remove or Disconnect (Figures 38, 39, 42 and 43 through 45)

Tools Required:

J 6893-D Wheel Bearing Nut Wrench (V1 and V2 Models)

J 26878-A Wheel Bearing Nut Wrench (V3 Models)

- Raise the vehicle and support it with suitable safety stands.

1. Wheel and tire assembly.
2. Caliper.
   - Refer to HYDRAULIC FOUNDATION BRAKES (SEC. 5A2).
3. Locking hub assembly (249).
   - Refer to FRONT DRIVING AXLE (SEC. 4C).
4. Lock nut (250), ring (251) and adjusting nut (252).
   - Use J 6893-D for V1 and V2 models (figure 42).
   - Use J 26878-A for V3 models (figure 42).
5. Hub/rotor assembly (257).
   - Outer wheel bearing (253) will slide off the spindle (265) ahead of the hub/rotor (257).
   - Use a brass drift and hammer for the seal (260) and races (254 and 258).
   - The inner bearing (259) and race (258) are behind the seal (260).

Inspect

1. Rotor braking surfaces for scoring, pitting or cracks.
   - Repair or replace as necessary.
2. Wheel bearings (253 and 259) and races (254 and 258).
   - Refer to "Diagnosis of Wheel Bearings" in this section.
   - If either a bearing or its race is damaged or worn, replace both.

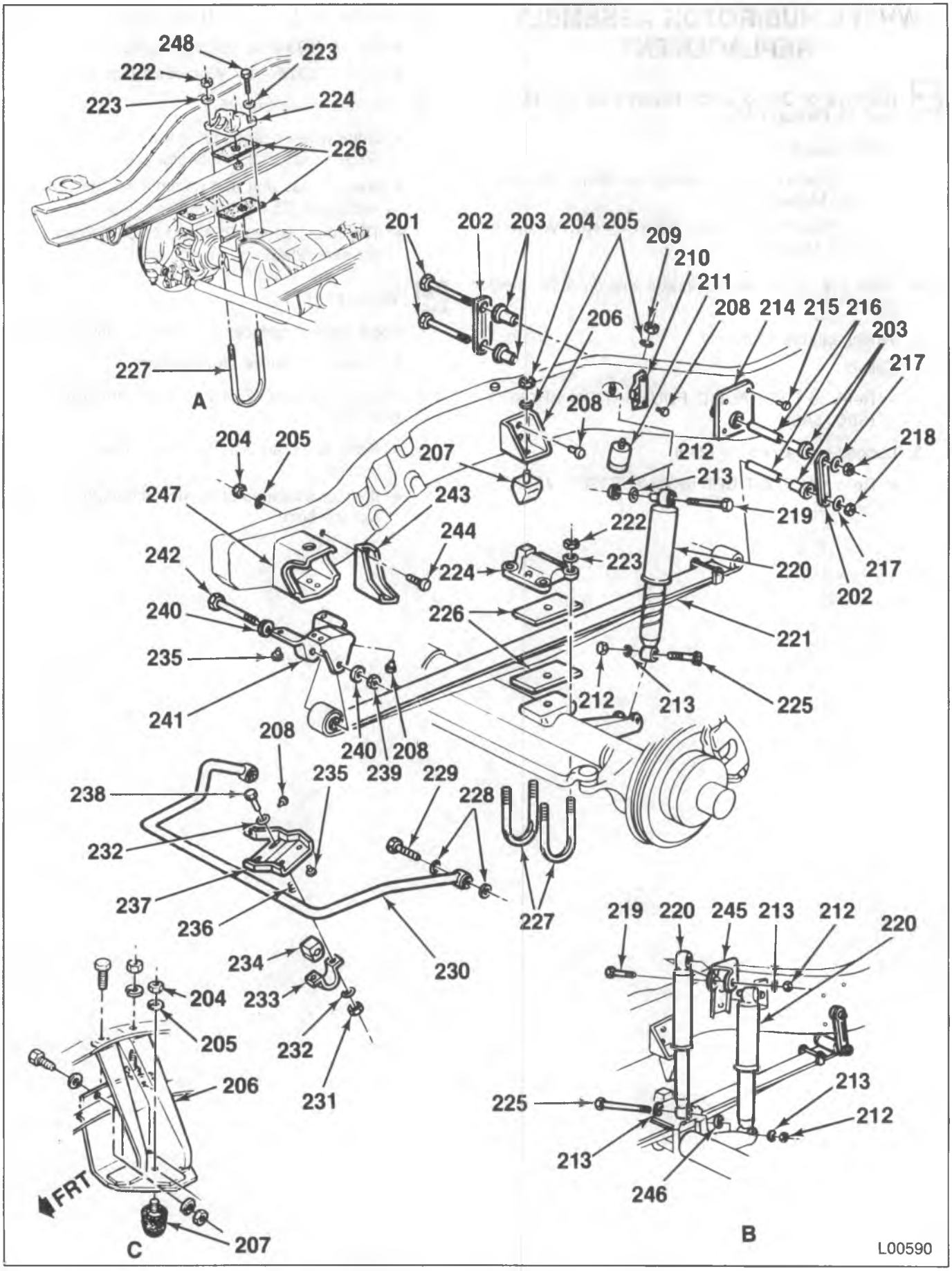

Figure 38—V Model Front Suspension

A. 3500 Series Right Side
B. Quad Shock RPO Z75
C. With 6.2L Diesel or L05 Engine and Z75 Quad Shocks
201. Bolt
202. Shackle
203. Bushing
204. Nut
205. Washer
206. Bracket
207. Bumper
208. Rivet
209. Nut
210. Bracket
211. Bumper
212. Nut
213. Washer
214. Hanger
215. Rivet
216. Spacer
217. Washer
218. Nut
219. Bolt
220. Shock Absorber
221. Leaf Spring
222. Nut
223. Washer
224. Plate
225. Bolt
226. Spacer
227. U-Bolt
228. Washer
229. Bolt
230. Stabilizer Bar
231. Nut
232. Washer
233. Bracket
234. Bushing
235. Rivet
236. Rivet
237. Bracket
238. Bolt
239. Nut
240. Washer
241. Hanger
242. Bolt
243. Reinforcement
245. Bracket
246. Spacer
247. Bracket
248. Bolt

L00591

Figure 39 – V Model Front Suspension

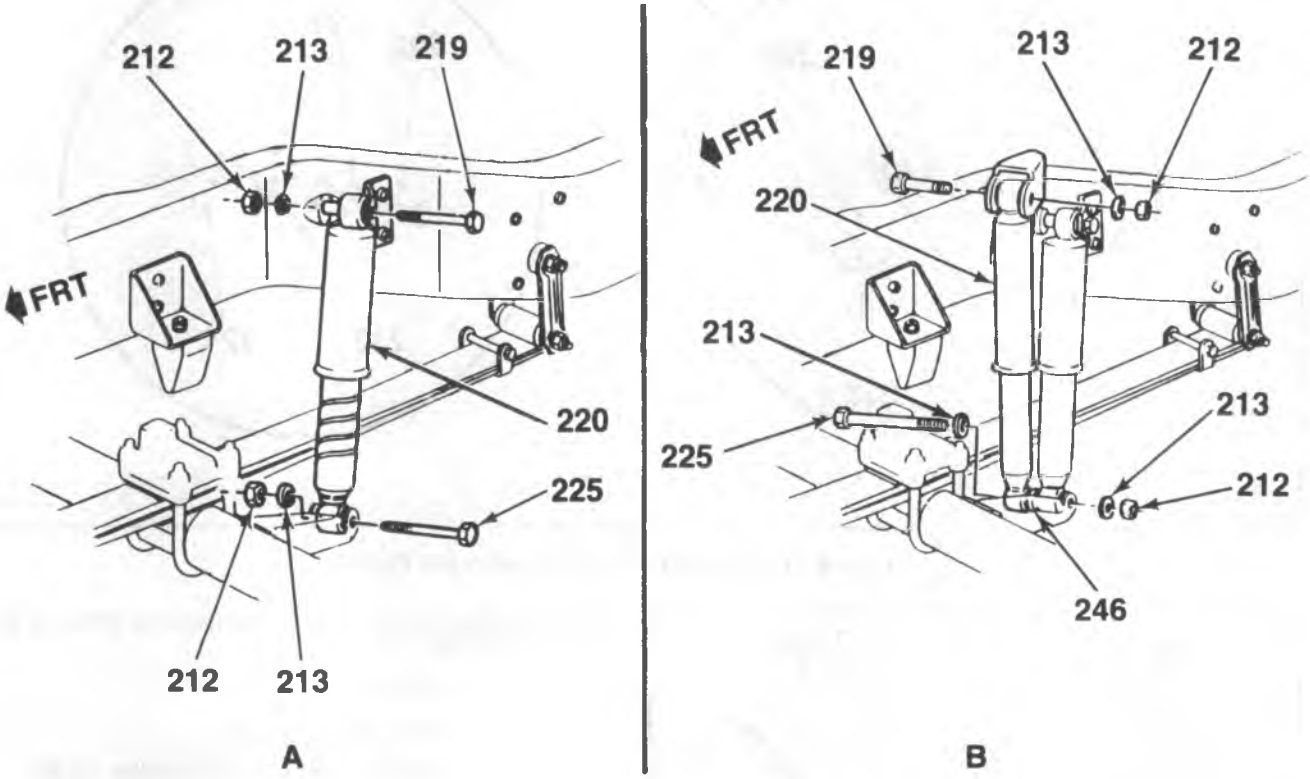

A. V-Model Standard Shock Absorber Mounting
B. V-Model RPO Z75 Quad Shock Absorber Mounting
212. Nut
213. Washer
219. Bolt
220. Shock Absorber
225. Bolt
246. Spacer

L00592

Figure 40 – Shock Absorber Attachment Points

224. Plate
228. Washer
229. Bolt
230. Stabilizer Bar
231. Nut
232. Washer
233. Bracket
234. Bushing
238. Bolt

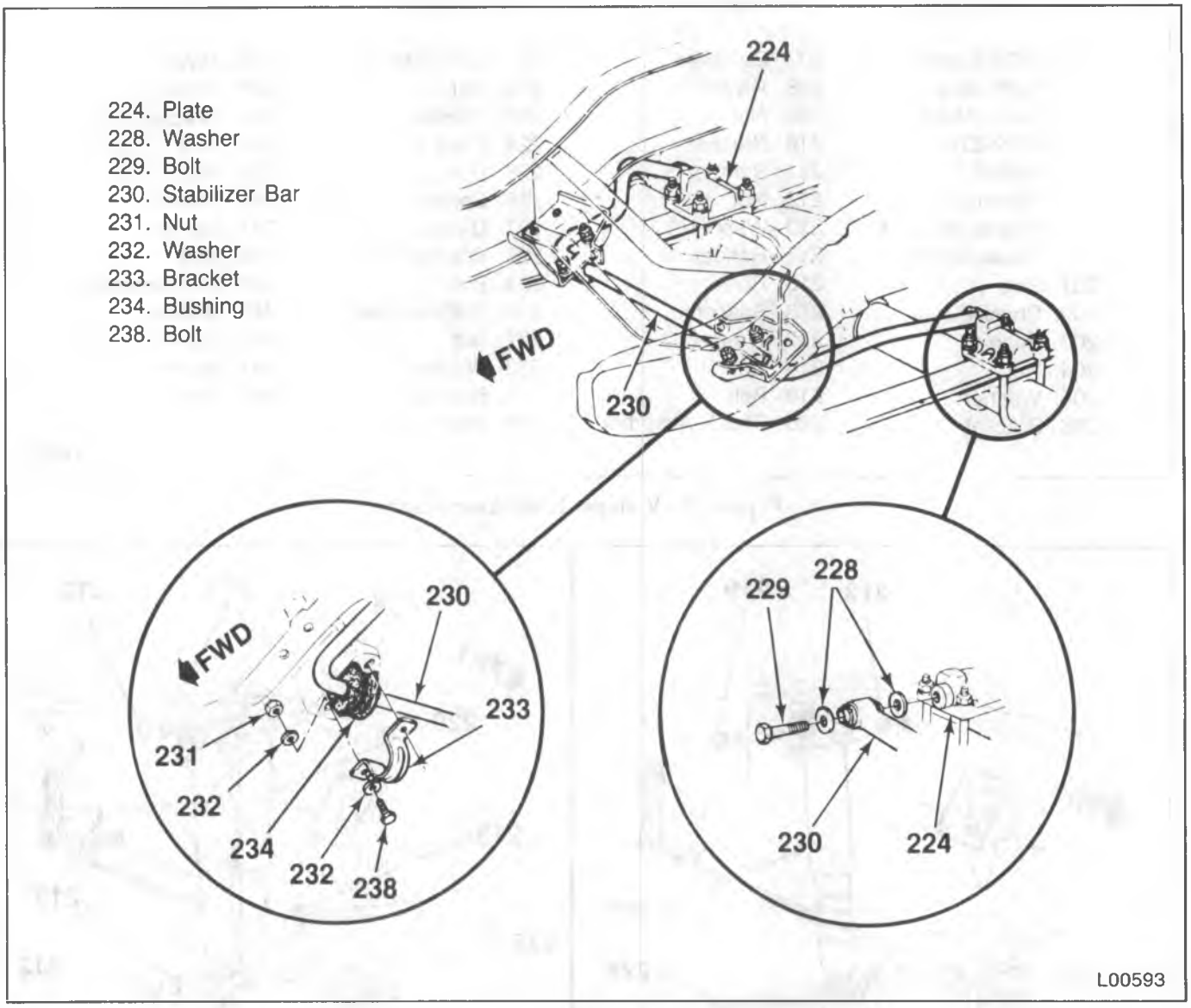

Figure 41 – Stabilizer Shaft Attachment Points

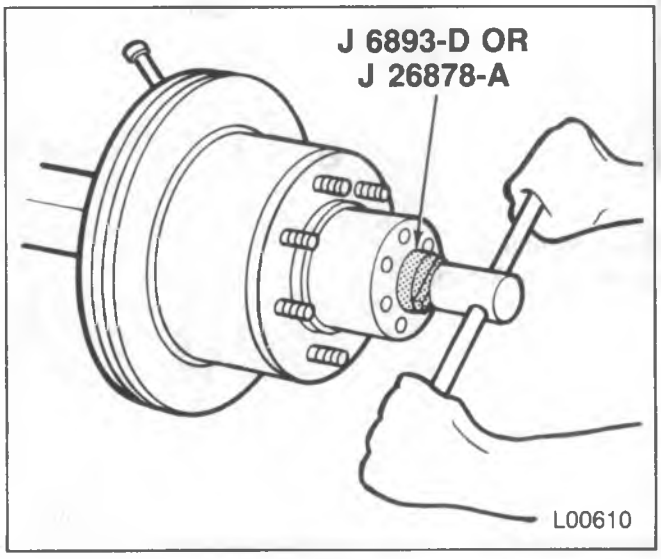

Figure 42 – Removing/Installing Locking or Adjusting Nut

Install or Connect (Figures 38, 39 and 43 through 47)

Tools Required:

J 8092 Driver Handle

J 6368 Bearing Race Installer (Outer)

J 23448 Bearing Race Installer (Inner)

J 6893-D Wheel Bearing Nut Wrench (V1 and V2 models)

J 26878-A Wheel Bearing Nut Wrench (V3 models)

1. Races (254 and 258) into the hub/rotor (257).
   - Use J 8092 and J 6368 for installation of the outer bearing outer race (254) (figure 46).
   - Use J 8092 and J 23448 for installation of the inner bearing outer race (258) (figure 47).
   - Do not damage the hub/rotor during the race installations.

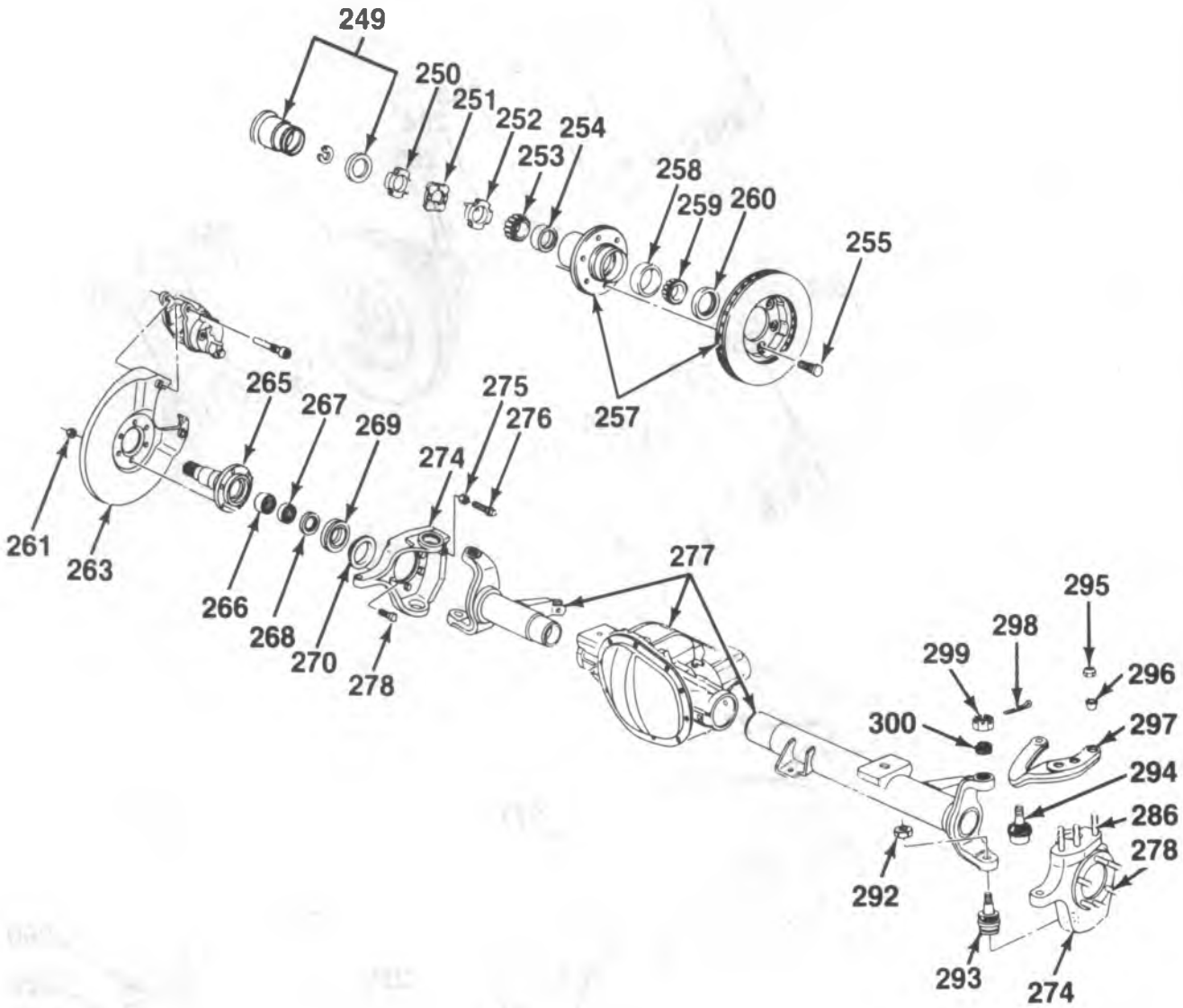

249. Locking Hub Assembly
250. Lock Nut
251. Ring
252. Adjusting Nut
253. Outer Wheel Bearing
254. Outer Race
255. Wheel Hub Nut
257. Rotor/Hub
258. Inner Race
259. Inner Wheel Bearing
260. Seal
261. Nut
263. Plate
265. Spindle
266. Shaft Bearing
267. Bearing Seal
268. Spacer
269. Seal
270. Oil Deflector
271. Bolt
272. Washer
273. Cap
274. Steering Knuckle
275. Nut
276. Bolt
277. Axle Housing/Tubes
278. Bolt
286. Bolt
292. Nut
293. Lower Ball Joint
294. Upper Ball Joint
295. Nut
296. Adapter
297. Steering Arm
298. Cotter Pin
299. Nut
300. Adjusting Ring

L00594

Figure 43 – Knuckle and Hub/Rotor Components (V1 and V2 Models)

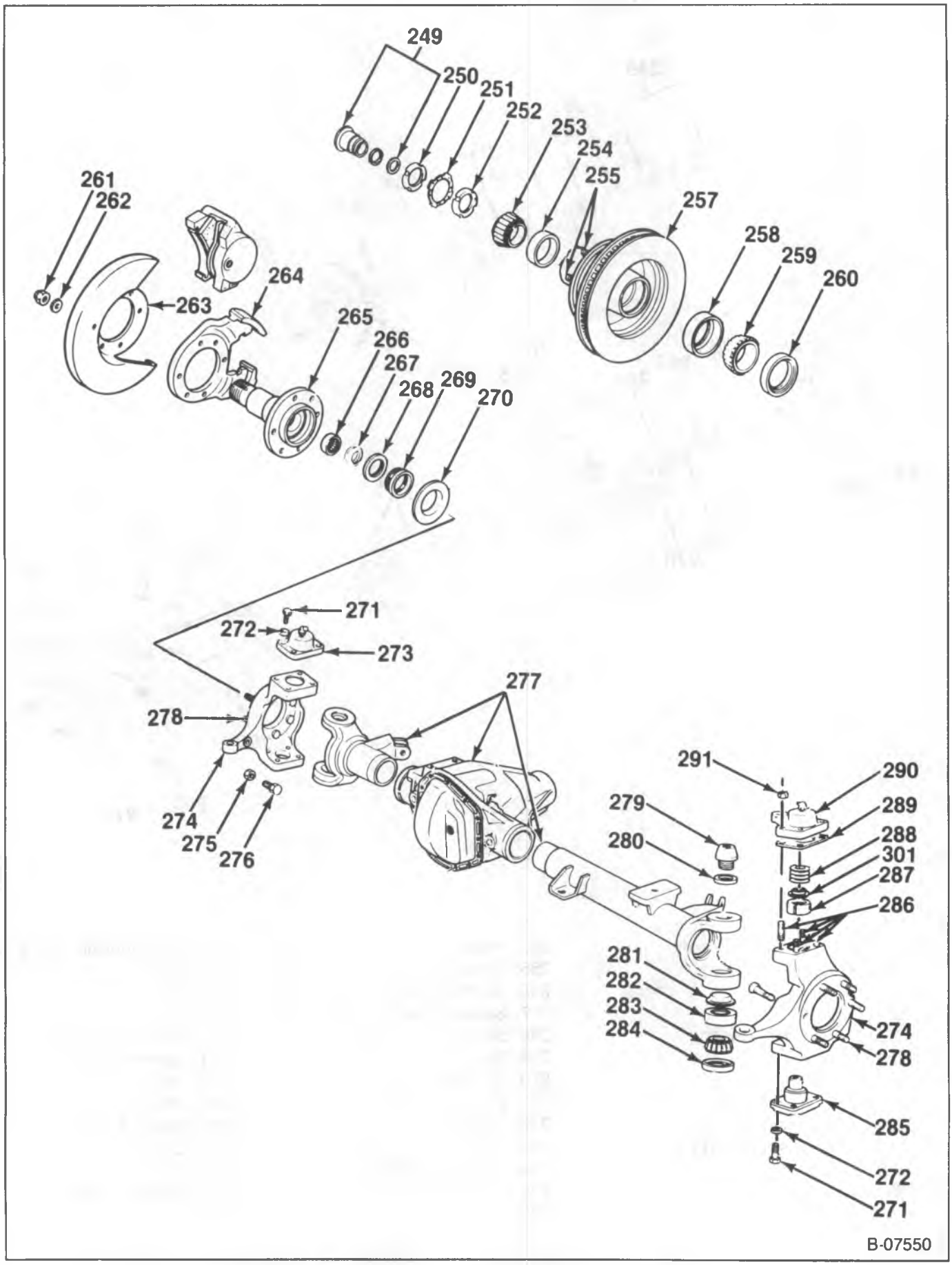

Figure 44 – Knuckle and Hub/Rotor Components (V3 Models)

249. Locking Hub Assembly
250. Locking Nut
251. Ring
252. Adjusting Nut
253. Outer Wheel Bearing
254. Outer Race
255. Wheel Hub Bolt
257. Rotor/Hub
258. Inner Race
259. Inner Wheel Bearing
260. Seal
261. Nut
262. Washer
263. Plate
264. Bracket
265. Spindle
266. Shaft Bearing
267. Bearing Seal
268. Spacer
269. Seal
270. Oil Deflector
271. Bolt
272. Washer
273. Cap
274. Steering Knuckle
275. Nut
276. Bolt
277. Axle Housing/Tubes
278. Bolt
279. King Pin
280. Seal
281. Retainer
282. Race
283. Bearing
284. Seal
285. Bearing Cap and King Pin
286. Bolt
287. Bushing
288. Spring
289. Gasket
290. Steering Arm
291. Nut
301. Retainer

L00595

Figure 45—Knuckle and Hub/Rotor Components (V3 Models)

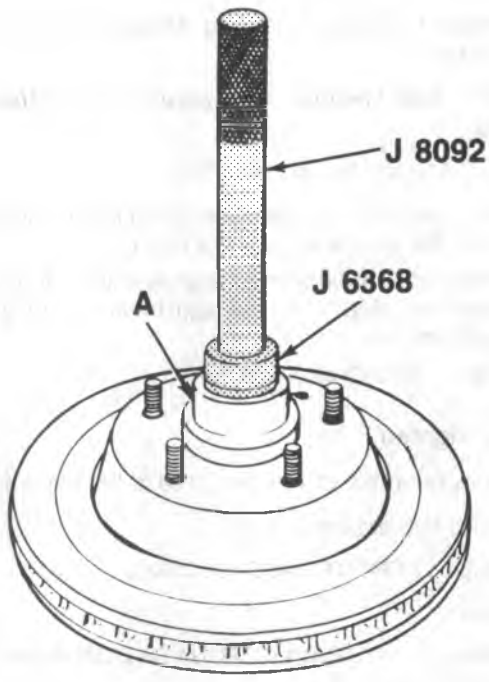

A. Outer Wheel Bearing Race

L00611

Figure 46—Installing the Outer Wheel Bearing Race

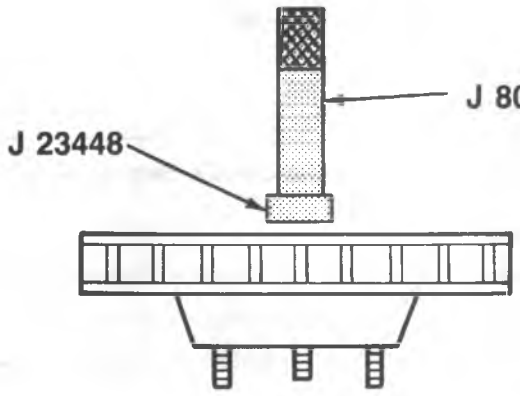

L00612

Figure 47—Installing the Inner Bearing Race

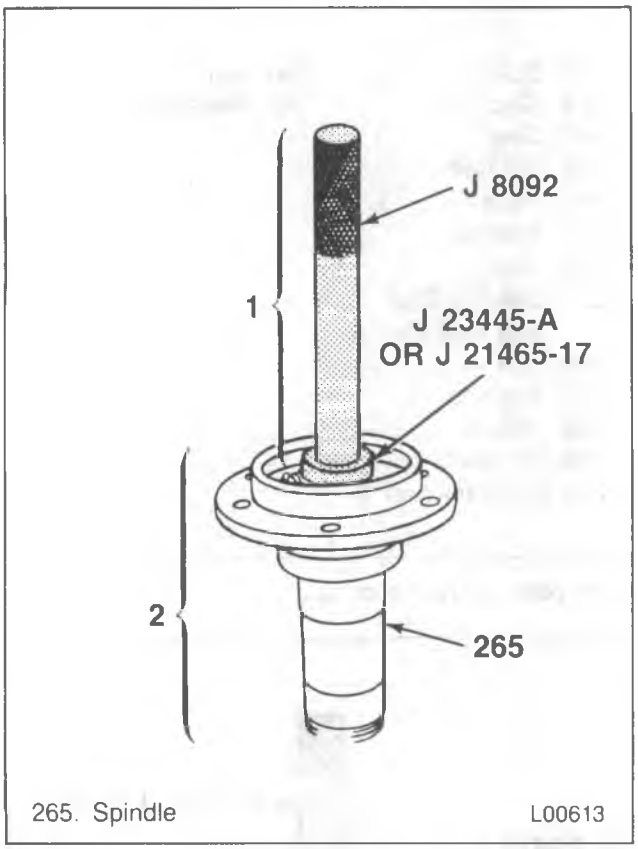

Figure 48 – Installing the Spindle Bearing Seal

Clean

- Grease from the rotor/hub (257) and spindle (265).
- Grease from the wheel bearings (253 and 259).
- Use clean solvent and a small brush with no loose bristles.
- Do not spin the wheel bearings with compressed air to dry them – the wheel bearings may be damaged.

Important

- Use an approved high-temperature front wheel bearing grease. Refer to MAINTENANCE AND LUBRICATION (SEC. 0B).
- Do not mix greases as mixing may change the grease's properties resulting in poor performance.

2. Apply a thin film of grease to the spindle at the outer wheel bearing seat and at the inner wheel bearing seat, shoulder and seal seat.
3. Put a small quantity of grease inboard of each wheel bearing cup, inside the rotor/hub (257).
4. Fill the wheel bearing (cone and roller assemblies) full of grease.
   - Use a cone-type grease packer that forces grease into the bearing.
   - If a cone-type grease packer is not available, pack the wheel bearings by hand.
   - If packing the wheel bearings by hand, work the grease into the bearings between the rollers, cones, and the cage.

NOTICE: Failure to completely pack the wheel bearings (cones, rollers, and cage) with grease will result in premature wheel bearing damage and/or wear.

5. Inner wheel bearing (259) into the rotor/hub (257).
   - Put an additional quantity of grease outboard of this wheel bearing.
6. New seal (260).
   - Use a flat plate to install the seal so it is flush with the rotor/hub flange.
   - Lubricate the seal lip with a thin layer of grease.
7. Rotor/hub (257).
   - Do not damage the spindle threads.
8. Outer wheel bearing (253).
   - Press on the spindle until the wheel bearing fully seats against the rotor/hub outer race.
9. Adjusting nut (252).

- Adjust the wheel bearing.
  - Refer to "Wheel Bearing Adjustment" in this section.

NOTICE: See "Notice" on page 3C-1 of this section.

10. Ring (251) and locking nut (250).
    - Tang on the inside diameter of the ring must pass onto the slot on the spindle (265).
    - The hole in the ring must align with the pin on the lock nut (250). Move the adjustment nut (252) to align the pin.
    - Use J 6893-D or J 26878-A.

Tighten

- Lock nut (250) to 217 N•m (160 ft. lbs.) minimum.

11. Locking hub assembly (249).
    - Refer to FRONT AXLE (SEC. 4C).
12. Caliper.
    - Refer to HYDRAULIC FOUNDATION BRAKES (SEC. 5A2).
13. Wheel and tire assembly.

- Lower the vehicle.

BEARING ADJUSTMENT

Important

- The proper functioning of the front suspension cannot be maintained unless the front wheel bearings are correctly adjusted. The cones must be a slip fit on the spindle and the inside diameter of the cones must be lubricated to insure the cones will creep. The adjusting nut must have a free-running fit on the spindle threads.

Adjust (Figure 43)

- Raise the vehicle and support it with safety stands.

1. Remove the locking hub assembly (249), lock nut (250) and ring (251).

Tighten

- Adjusting nut (252) to 60 N•m (50 ft. lbs.) while rotating the hub/rotor; this will seat the bearings.

2. Back off the adjusting nut (252).

Tighten

- For automatic hubs, torque the adjusting nut to 47 N•m (35 ft. lbs.) while rotating the wheel.
- For manual hubs, torque the adjusting nut to 60 N•m (50 ft. lbs.) while rotating the wheel.

3. Back off the adjusting nut (252).
   - For automatic hubs, back off 3/8 of a turn maximum.
   - For manual hubs, back off enough to free the bearing.
4. Install the ring (251) and lock nut (250).
   - Tang on the inside diameter of the ring must pass onto the slot on the spindle (265).
   - The hole in the ring must align with the pin on the lock nut (250). Move the adjusting nut (252) to align the pin.

Tighten

- Lock nut (250) to 217 N•m (160 ft. lbs.) minimum.

Measure

- Endplay in the hub/rotor assembly. It should be set between 0.025 to 0.254 mm (0.001 to 0.010-inch). See figure 14.

5. Install the locking hub assembly (249).
   - Refer to FRONT DRIVING AXLE (SEC. 4C).

- Lower the vehicle.

WHEEL HUB BOLT REPLACEMENT

Remove or Disconnect (Figure 49)

Tool Required:

J 9746-02 Hub/Rotor Support

1. Hub/rotor assembly from the vehicle.
   - Refer to "Wheel Hub/Rotor Assembly" in this section.
2. Wheel hub bolts (255) with a press.
   - Support the hub/rotor using J 9746-02 to prevent damage to the rotor face (figure 49).
   - Do not damage the wheel mounting surface on the hub/rotor flange.

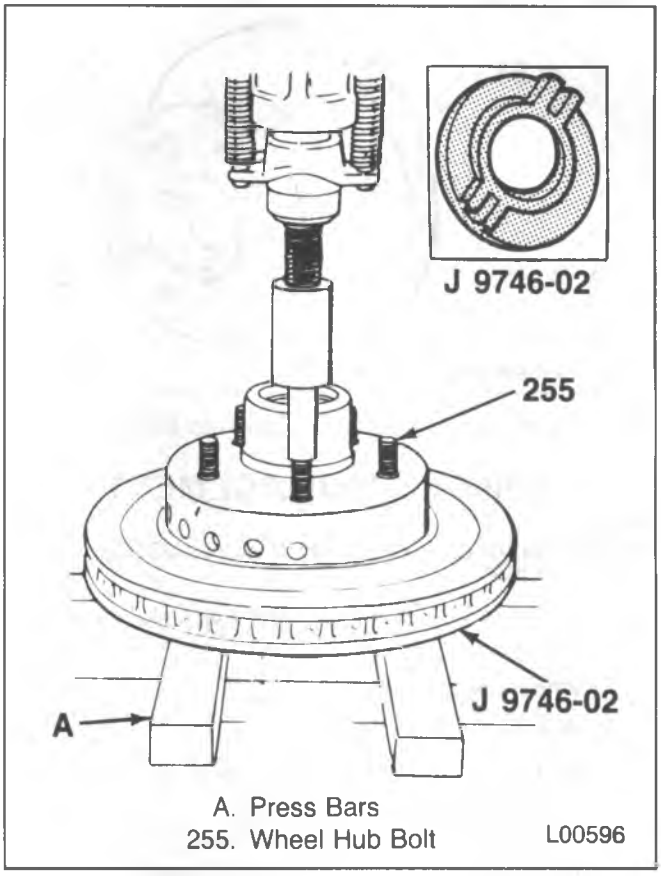

Figure 49 – Removing the Hub Bolts

Install or Connect (Figure 50)

Tool Required:

J 9746-02 Hub/Rotor Support

NOTICE: See "Notice" on page 3C-1 of this section.

1. New serrated bolt (255) into the hole in the hub/rotor.
   - Place four washers onto the bolt, then fasten a nut onto the bolt until the nut bottoms on the washers (figure 50).
   - Tighten the nut until the bolt fully seats into the hub/rotor.
   - Remove the nut and washers.
2. Hub/rotor to the vehicle.
   - Refer to "Wheel Hub/Rotor Assembly Replacement" in this section.
3. Wheel and tire assembly.

- Lower the vehicle.

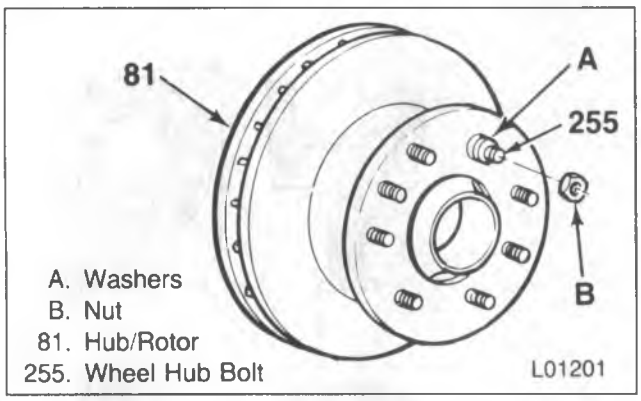

Figure 50—Installing the Hub Bolts

SPINDLE REPLACEMENT

Remove or Disconnect (Figures 38, 39, 51 and 52)

- Raise the vehicle and support it with suitable safety stands.

1. Wheel and tire assembly.
2. Wheel hub/rotor assembly.
   - Refer to "Wheel Hub/Rotor Assembly Replacement" in this section.
3. Nuts (261) and plate (263) (V1 and V2 models).
4. Nuts (261), washers (262), plate (263) and bracket (264) (V3 models).
5. Spindle (265) from the steering knuckle (274).
   - Tap the end of the spindle with a plastic or rubber mallet to break it loose from the steering knuckle (274) (figure 51).

NOTICE: The machined surface of the spindle must not be damaged by vise jaws.

6. Spindle components.
   - Secure the spindle in a vise by locating on the high step diameter.

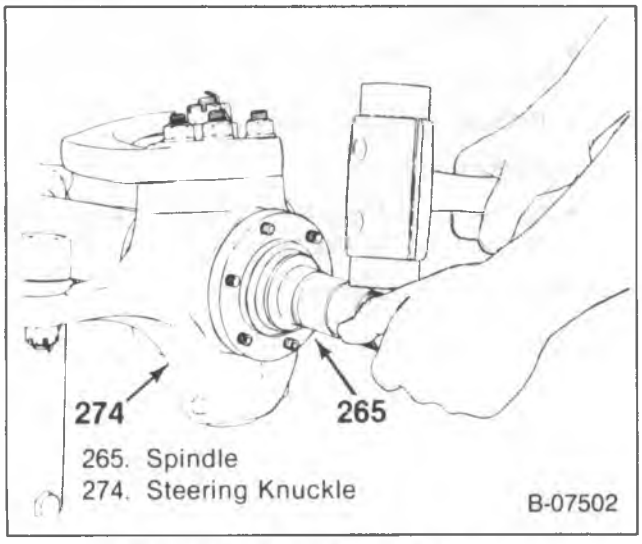

Figure 51—Removing the Spindle

7. Bearing seal (267) and shaft bearing (266) (figure 51).
8. Spacer (268), seal (269), and oil deflector (270) from the axle shaft (figure 52).

Inspect

- Spacer (268). Replace if worn.
- Spindle (265) for any heat burns, scoring or wear. Replace if necessary.

Install or Connect (Figures 38, 39, 48, 52 and 53)

Tools Required:

J 23445-A Needle Bearing Installer (V1 and V2 models)

J 8092 Driver Handle

J 21465-17 Bearing Installer (V3 models)

- Relubricate the shaft bearing (266) and the spindle (265) with a high melting point type wheel bearing grease. Refer to MAINTENANCE AND LUBRICATION (SEC. 0B).

1. Shaft bearing (266) and bearing seal (267) into the spindle (265).
   - For V1 and V2 models, use J 8092 and J 23445-A (figure 48).
   - For V3 models, use J 8092 and J 21465-17 (figure 48).
2. Seal (269) onto the oil deflector (270) with the deflector lip toward the spindle (265).
3. Oil deflector (270) and seal (269) onto the axle shaft.
4. Spacer (268) onto the axle shaft.
   - The chamfer points toward the oil deflector (270) (figure 53).
5. Spindle (265) onto the steering knuckle (274).
   - Slide the spindle over the axle shaft until it seats on the steering knuckle. The bolts (278) must protrude through the spindle.
6. Bracket (264) and plate (263).
   - Only V3 models use a bracket (264).

NOTICE: See "Notice" on page 3C-1 of this section.

7. Washers (262) (V3 models only) and NEW nuts (261).

Tighten

- Nuts (261) to 88 N•m (65 ft. lbs.).

8. Wheel hub/rotor assembly.
   - Refer to "Wheel Hub/Rotor Assembly Replacement" in this section.
9. Wheel and tire assembly.

- Lower the vehicle.

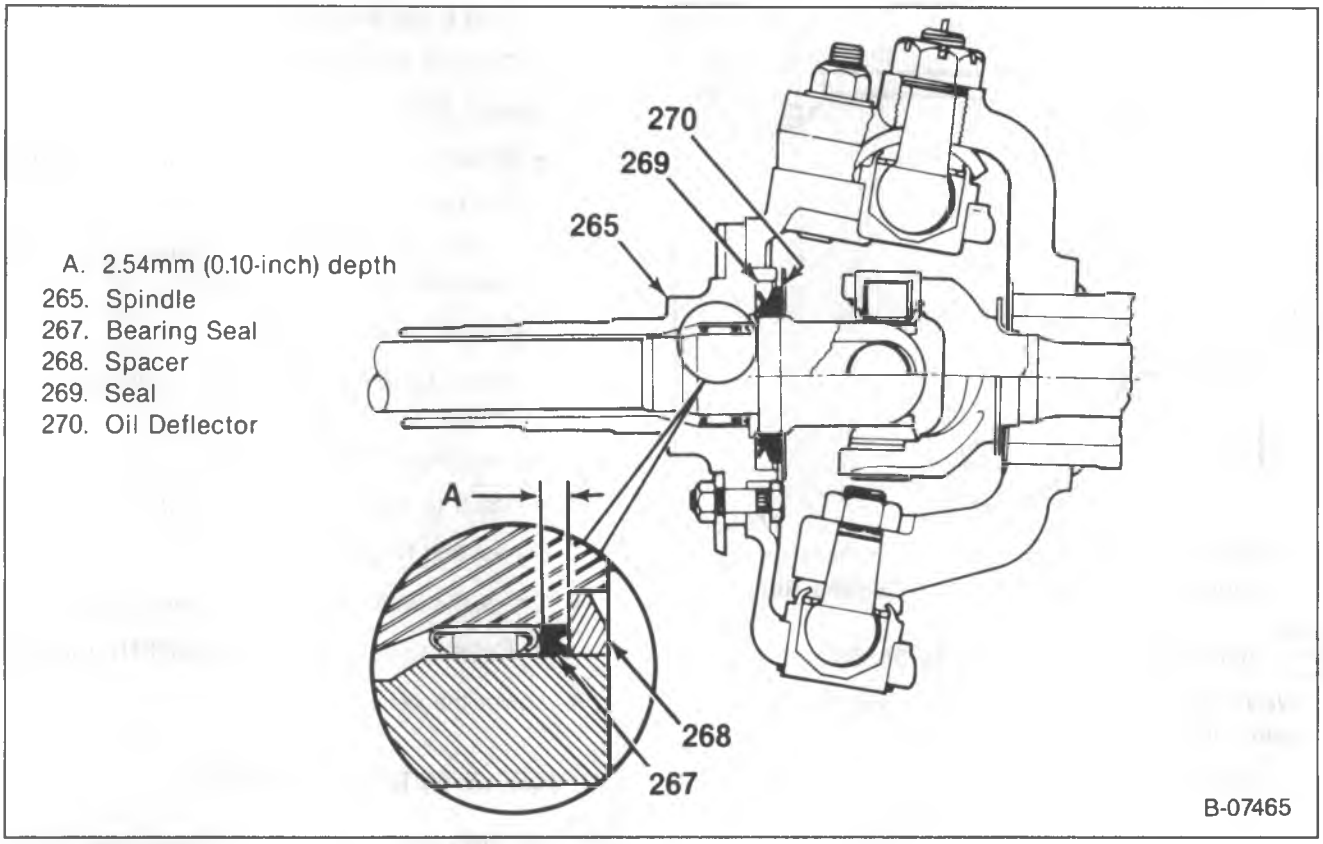

Figure 52 – Spindle Components

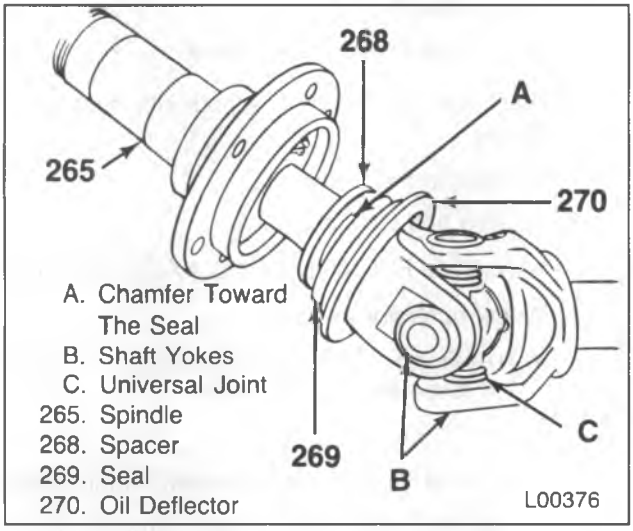

Figure 53 – Installing the Spindle

STEERING KNUCKLE AND ARM REPLACEMENT

V1 AND V2 MODELS (WITH BALL JOINTS)

Remove or Disconnect (Figures 38, 39 and 54)

- Raise the vehicle and support with suitable safety stands.

1. Wheel and tire assembly.
2. Locking hub assembly (249).
   - Refer to FRONT DRIVING AXLE (SEC. 4C).
3. Wheel hub/rotor assembly.
   - Refer to "Wheel Hub/Rotor Assembly Replacement" in this section.
4. Spindle (265) from the steering knuckle (274).
   - Refer to "Spindle Replacement" in this section.
5. Tie rod from the steering arm (297).
   - Refer to STEERING LINKAGE (SEC. 3B3).
6. Nuts (295) and adapters (296).
7. Steering arm (297) from the steering knuckle (274).
8. Cotter pin (298) nuts (292 and 299).

NOTICE: Do not remove the adjusting ring (300) unless new ball joints are being installed. If it is necessary to loosen the ring to remove the knuckle, do not loosen it more than two threads. Use J 23447 (figure 54). The nonhardened threads in the yoke can be easily damaged by the hardened threads in the adjusting ring if caution is not used during knuckle removal.

9. Steering knuckle (274) from the axle yoke.
   - Insert a wedge-shaped tool between the lower ball joint (293) and the yoke. Tap on the tool to release the knuckle assembly.
   - Insert the wedge-shaped tool between the upper ball joint (294) and the yoke. Tap on the tool to release the knuckle assembly.

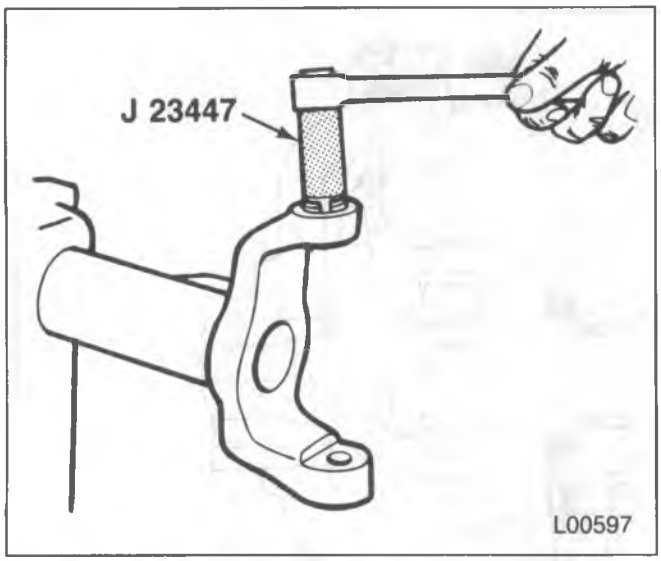

Figure 54 – Tightening the Adjusting Ring

Install or Connect (Figures 38, 39 and 54)

NOTICE: For steps 3, 4, and 6, see "Notice" on page 3C-1 of this section.

Tool Required:

J 23447 Ball Stud Nut Wrench

1. Steering knuckle (274) to the axle yoke.
2. Ball joints (293 and 294) into their respective sockets in the axle yoke.
3. Nuts (292 and 299) onto the ball joints (293 and 294) finger tight. The nut with the cotter pin slot goes with the upper ball joint.

Tighten

- Nut (292) to 40 N•m (30 ft. lbs.).
  - Push up on the steering knuckle [to keep the ball joint (293) from turning in the knuckle].
- Adjusting ring (300) to 70 N•m (50 ft. lbs.) using J 23447 (figure 54).
- Upper ball joint nut (299) to 135 N•m (100 ft. lbs.).

4. Cotter pin (298).
   - Do not loosen the nut. Apply additional torque, if necessary, to line up the slot in the nut with the hole in the ball joint.

Tighten

- Lower ball joint nut (292) to 95 N•m (70 ft. lbs.).

5. Steering arm (297) to the steering knuckle (274).
6. Adapters (296) and NEW nuts (295).

Tighten

- Nuts (295) to 120 N•m (90 ft. lbs.).

7. Tie rod to the steering arm (297).
   - Refer to STEERING LINKAGE (SEC. 3B3).
8. Spindle (265) to the steering knuckle (274).
   - Refer to "Spindle Replacement" in this section.
9. Wheel hub/rotor assembly.
   - Refer to "Wheel Hub/Rotor Assembly Replacement" in this section.

- Adjust the wheel bearings.
  - Refer to "Wheel Bearing Adjustment" in this section.

10. Locking hub assembly (249).
    - Refer to FRONT DRIVING AXLE (SEC. 4C).
11. Wheel and tire assembly.

- Check the front end alignment and reset as required.
  - Refer to FRONT END ALIGNMENT (SEC. 3A).
- Lower the vehicle.

V3 MODELS (WITH BALL JOINTS)

Remove or Disconnect (Figures 38, 39 and 55 through 58)

Tool Required:

J 26871 Ball Joint Socket

- Raise the vehicle and support with suitable safety stands.

1. Wheel and tire assembly.
2. Locking hub assembly (249).
   - Refer to FRONT DRIVING AXLE (SEC. 4C).
3. Wheel hub/rotor assembly.
   - Refer to "Wheel Hub/Rotor Assembly Replacement" in this section.
4. Spindle (265).
   - Refer to "Spindle Replacement" in this section.
5. Upper cap (273) and/or steering arm (290).
   - For the cap, remove the bolts (271) and washers (272) alternately as the compression spring will force the cap up.
   - For the steering arm, remove the nuts (291) alternately as the compression spring will force the steering arm up (figure 55).
6. Gasket (289) and compression spring (288).
7. Bolts (271) and washers (272) (figure 56).
8. Lower bearing cap and ball joint (285).

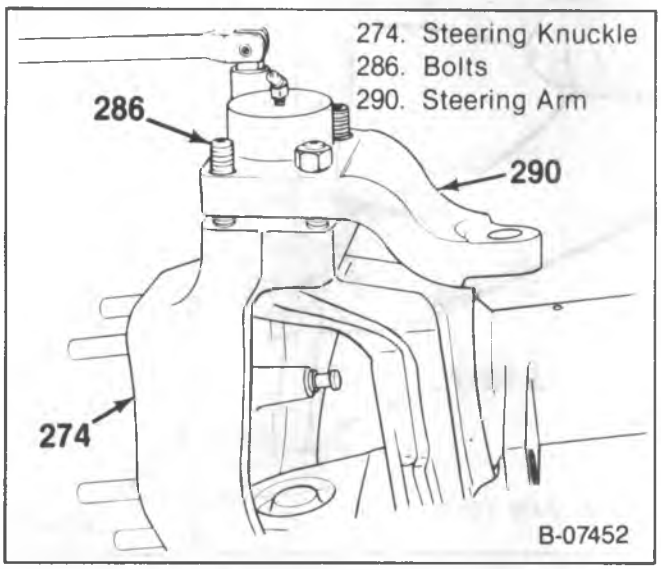

Figure 55 – Removing the Cap and Steering Arm Fasteners

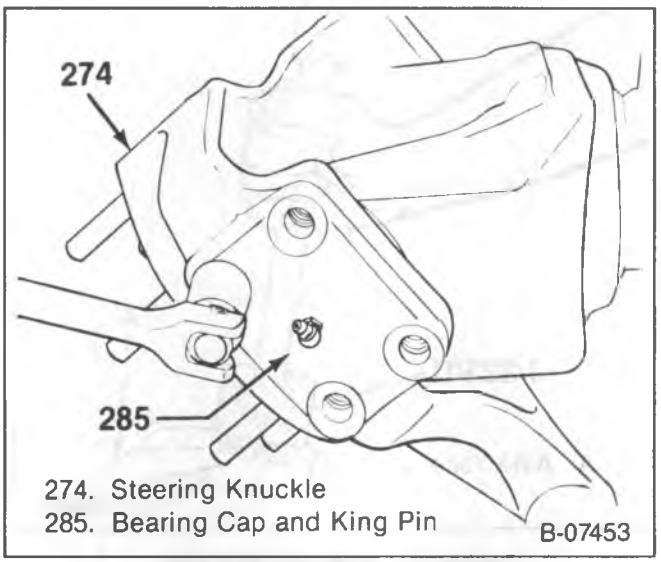

Figure 56 – Removing the Lower Bearing Cap and King Pin

9. Upper ball joint bushing (287).
   - Pull it out through the steering knuckle (274).
10. Steering knuckle (274) from the axle yoke.
11. Retainer (301).
12. Upper ball joint (279) from the axle yoke.
    - Use a large breaker bar and J 26871 (figure 57).
    - Apply 677-813 N•m (500-600 ft. lbs.) of torque to break the ball joint free.
13. Retainer (281), race (282), bearing (283) and the seal (284) from the axle yoke.
    - Punch all the components out at once (figure 58).

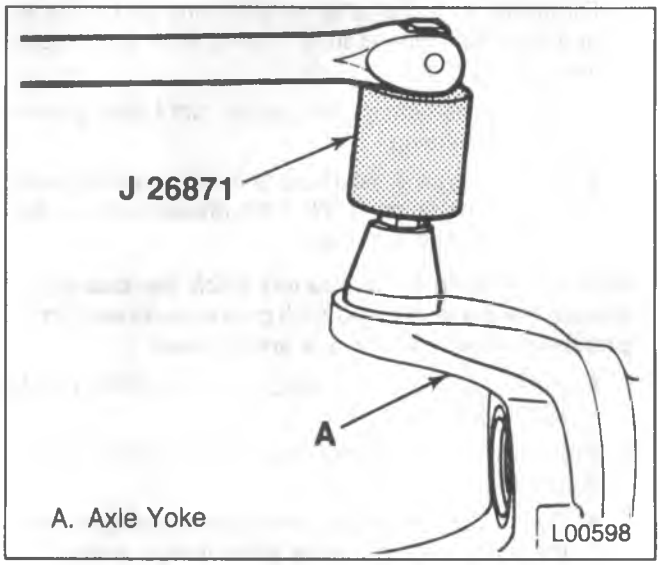

Figure 57 – Removing the Upper Ball Joint

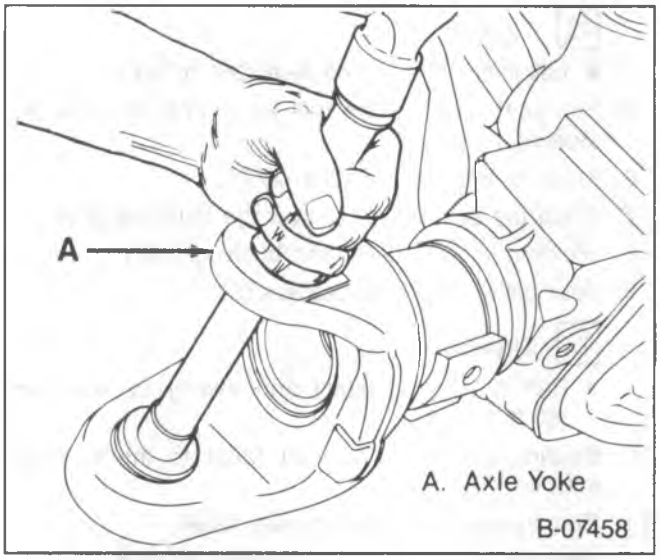

Figure 58 – Removing the Retainer, Race, Bearing and Seal

Install or Connect (Figures 39, 40 and 59 through 61)

NOTICE: For steps 4, 9 and 13, see "Notice" on page 3C-1 of this section.

Tools Required:

J 7817 Front Pinion Bearing Installer
J 22301 Ball Joint Bearing Seal Installer
J 28871 Ball Joint Installer

1. Retainer (281) and the race (282).
   - Use a new retainer.
   - Use J 7817 (figure 59).

2. Fill the area in the retainer (281) and race with an approved high temperature bearing lubricant. Grease the bearing (283).
   - Use a cone-type grease packer that forces grease into the bearing.
   - If a cone-type grease packer is not available, pack the bearing by hand. Work the grease between the rollers, cones and cage.

NOTICE: Failure to completely pack the bearing (cones, rollers and cage) with grease will result in premature bearing damage and/or wear.

   - Refer to MAINTENANCE AND LUBRICATION (SEC. 0B).
3. Bearing (283) and NEW seal (284) using J 22301 (figure 60).
   - Do not distort the seal. It will protrude slightly from the surface of the axle yoke flange when fully seated.
4. Upper ball joint (279) using J 28871 (figure 61).

   Tighten
   - ball joint (279) to 745 N•m (550 ft. lbs.).
5. Felt seal (280) to the ball joint (279) through the steering knuckle.
6. Knuckle onto the ball joint (279).
7. Place the bushing (287) over the ball joint (279).
8. Steering knuckle (274) and bushing (287).
9. Four bolts (271) and washers (272).

   Tighten
   - Bolt (271) alternately and evenly to 108 N•m (80 ft. lbs.).
10. Bearing cap and ball joint (285) to the steering knuckle (278).
11. Compression ring (288) gasket (289).
12. Steering arm (290) to the steering knuckle (274).
13. Nuts (291).

   Tighten
   - Nuts (291) alternately and evenly to 108 N•m (80 ft. lbs.).
14. Spindle (265).
   - Refer to "Spindle Replacement" in this section.
15. Wheel hub/rotor assembly.
   - Refer to "Wheel Hub/Rotor Assembly Replacement" in this section.

- Adjust the wheel bearings.
   - Refer to "Wheel Bearing Adjustment" in this section.

16. Locking hub assembly (249).
   - Refer to FRONT DRIVING AXLE (SEC. 4C).
17. Wheel and tire assembly.

- Check the front end alignment and reset as required.
   - Refer to FRONT END ALIGNMENT (SEC. 3A).
- Lower the vehicle.

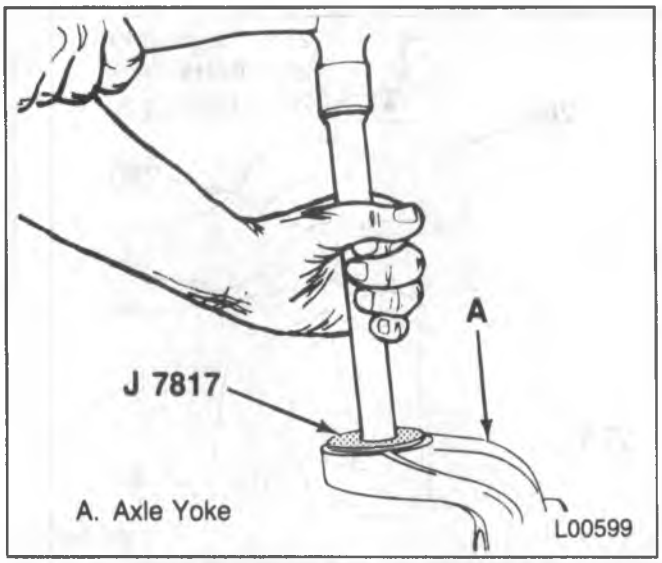

Figure 59 – Installing the Retainer

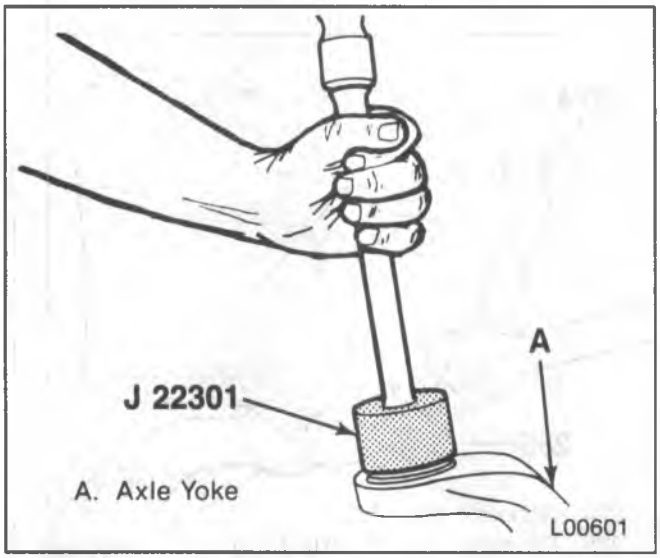

Figure 60 – Installing the Seal

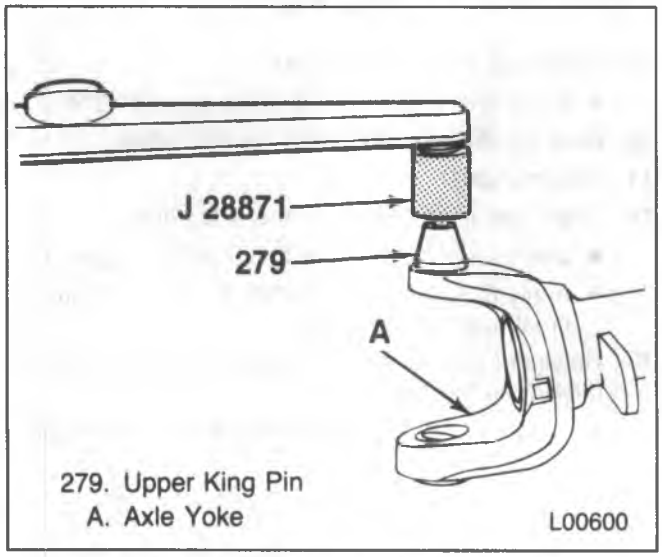

Figure 61 – Installing the Upper King Pin

CHECKING BALL JOINT TURNING EFFORT

(Figures 54 and 62)

V1 AND V2 MODELS

NOTE: Front axle ball joint adjustment is generally necessary only when there is excessive play in steering, irregular wear on tire, or persistent loosening of the tie rod.

- Raise vehicle and support it with suitable safety stands.

Remove or Disconnect

- Connecting rod and tie rod to allow independent movement of each steering knuckle. Refer to STEERING LINKAGE (SEC 3B3).
- Apply J 35999 or equivalent spring scale to the tie rod mounting hole of the steering knuckle arm (figure 62). With the knuckle assembly in the straight-ahead position, determine the right angle pull required to keep the knuckle assembly turning after initial breakaway. This pull should not exceed 25 lbs, for each knuckle assembly, in either direction. Refer to "Steering Knuckle and Arm Replacement" and figure 54 for adjustment, if necessary.

Install or Connect

- Connecting rod and tie rod. Refer to STEERING LINKAGE (SEC. 3B3).
- Lower the vehicle.

BALL JOINT REPLACEMENT (V1 AND V2 MODELS ONLY)

Remove or Disconnect (Figures 38, 39, 63 and 64)

Tools Required:

J 9519-30 Ball Joint Fixture
J 23454-1 Lower Ball Joint Spacer
J 23454-3 or
J 6382-3 Ball Joint Spacer
J 23454-4 Upper and Lower Ball Joint Sleeve

- Raise the vehicle and support with suitable safety stands.

1. Wheel and tire assembly.
2. Wheel hub/rotor assembly.
   - Refer to "Wheel Hub/Rotor Assembly Replacement" in this section.
3. Spindle.
   - Refer to "Spindle Replacement" in this section.
4. Steering knuckle (274) and steering arm (290).
   - Remove the steering arm (290) only if removing the left axle yoke ball joints.
   - Refer to "Steering Knuckle and Arm Replacement" in this section.
   - Place the steering knuckle in a vise (figure 63).

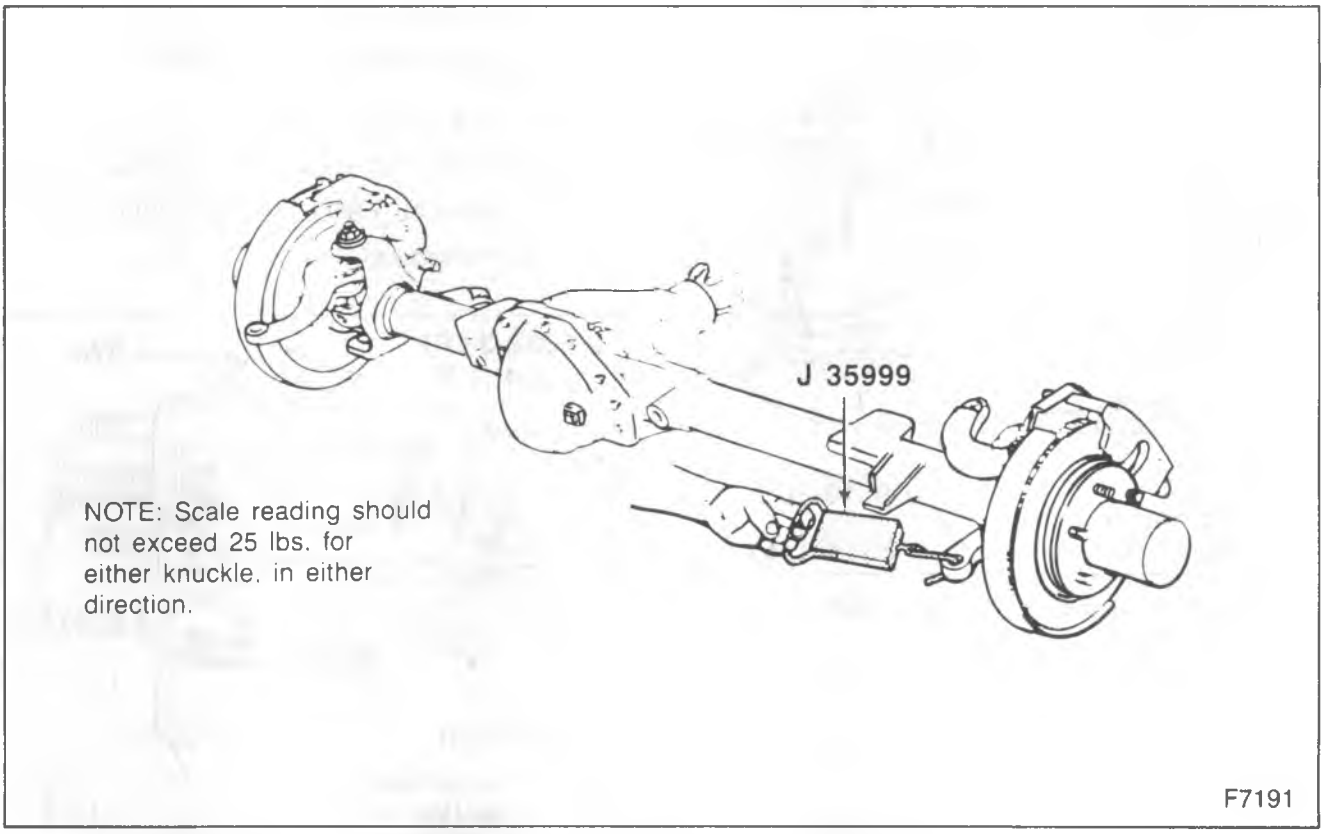

Figure 62—Check Ball Joint Turning Effort

5. Snap ring from the lower ball joint (293).
   - Use J 9519-30, J 23454-1, J 23454-4 or equivalent (figure 63). Tighten until the ball joint breaks free of the steering knuckle.
6. Lower ball joint (293); must be removed before any service can be done to the upper ball joint (294).
7. Upper ball joint (294).
   - Use J 9519-30, J 23454-3 (or J 6382-3) and J 23454-4 (figure 64). Tighten until the ball joint breaks free of the steering knuckle.

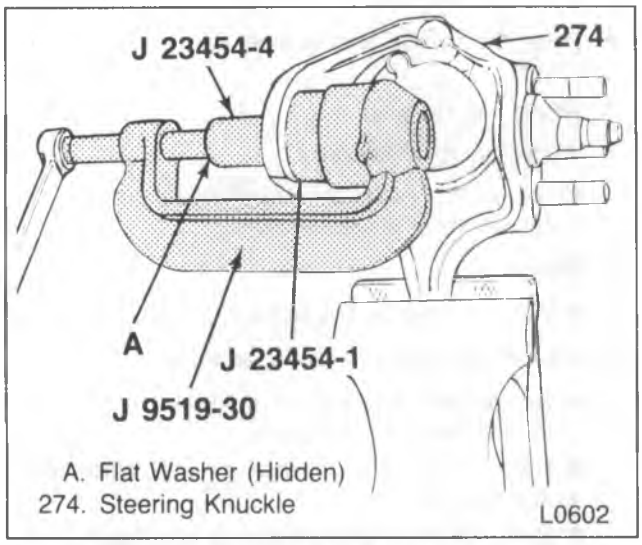

Figure 63 – Removing the Lower Ball Joint

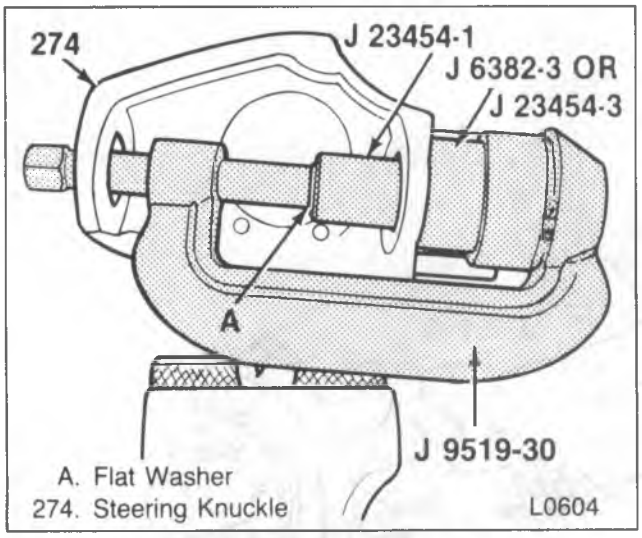

Figure 64 – Removing the Upper Ball Joint

Install or Connect (Figures 38, 39, 65 and 66)

Tools Required:

J 9519-30 Ball Joint Fixture

J 23454-2 Upper and Lower Ball Joint Sleeve

J23454-3 or

J 6382-3 Ball Joint Spacer

1. Lower ball joint (293) into the steering knuckle (274).
   - The ball joint (no cotter pin hole in the threaded end) must be positioned straight.
   - Use J 9519-30, J 23454-2, and J 23454-3 or J 6382-3 (figure 65). Tighten until the ball joint fully seats.
2. Snap ring in position.
3. Upper ball joint (294) into the steering knuckle (274).
   - Use J 9519-30, J 23454-2, and J 23454-3 or J 6382-3 (figure 66). Tighten until the ball joint fully seats.
4. Steering arm (290) (if removed) and steering knuckle (274).
   - Refer to "Steering Knuckle and Arm Replacement" in this section.
5. Spindle (265).
   - Refer to "Spindle Replacement" in this section.
6. Wheel hub/rotor assembly.
   - Refer to "Wheel Hub/Rotor Assembly Replacement" in this section.

- Adjust the wheel bearings.
  - Refer to "Wheel Bearing Adjustment" in this section.

7. Wheel and tire assembly.

- Check the front end alignment and reset as required.
- Refer to FRONT END ALIGNMENT (SEC. 3A).
- Lower the vehicle.

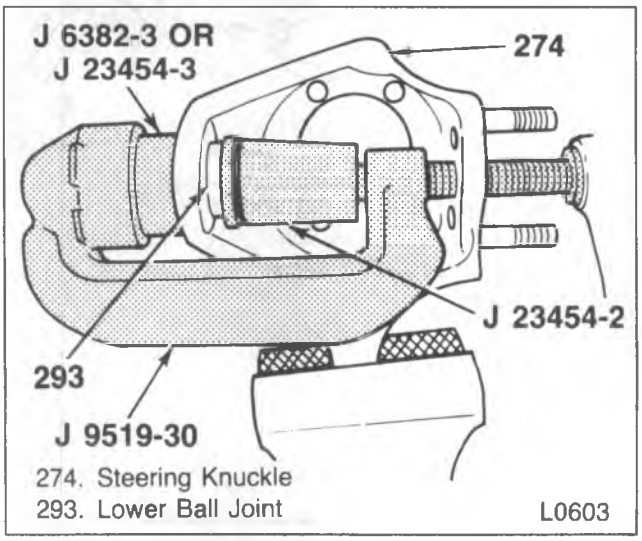

Figure 65 – Installing the Lower Ball Joint

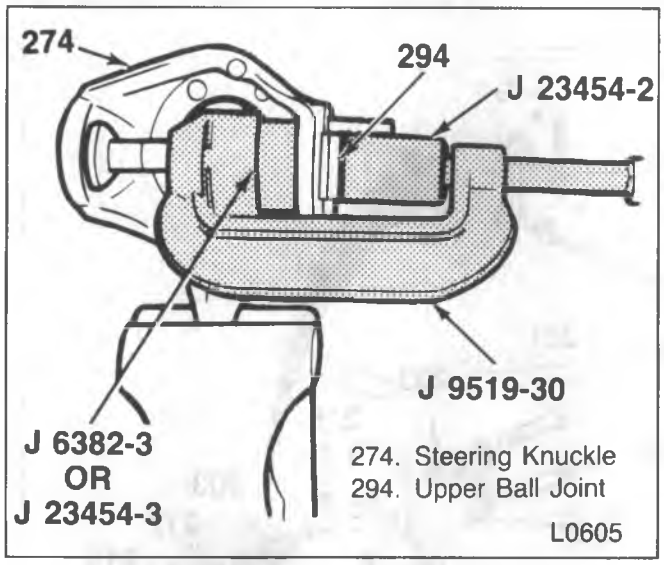

Figure 66—Installing the Upper Ball Joint

LEAF SPRING AND BUSHING REPLACEMENT

Remove or Disconnect (Figures 38, 39 and 67)

- Raise the vehicle on a hoist and support the front axle with a floor jack. Raise the floor jack until all tension is relieved from the springs.

1. Nut (218), washer (217), shackle (202), bolt (201), bushings (203) and spacer (216) (figure 38).
2. Spring (221) from frame.
3. Nut (239), washers (240) and bolt (242) (figure 67).
4. Spring (221) from the hanger (241).
5. Spring (221) from the axle.
   - For V1 and V2 and the left side of V3 models, remove nuts (222), washers (223), U-bolts (227), plate (224) and the spacers (226).
   - For the right side of V3 models, remove the bolts (248), nuts (222), washers (223), U-bolt (227), plate (224) and the spacers (226).
6. Nut (218), washer (217), bolt (201), bushings (203) and spacer (216) (figure 67).
7. Shackle (202) from the spring (221).
8. Bushing from the spring eye.
   - Place the spring in a press and press out the bushing using a suitable rod, pipe or tool.

Install or Connect (Figures 38, 39, 67 and 68)

1. Bushing into the spring eye.
   - Press in a new bushing, making sure the tool presses on the steel outer shell of the bushing.
   - Bushing must protrude an equal amount on either side of the spring eye when properly installed.
2. Shackle (202) into the spring (221).
3. Spacer (216), bushings (203), washers (217), bolt (201) and nut (218).
   - Do not tighten.
4. Upper spacer (226) onto the spring (221).
5. Spring into the hanger (241).
6. Bolt (242), washers (240) and nut (239).
   - Do not tighten.
7. Spring into the frame.
8. Bushings (203) and the spacer (216) into the frame.
9. Shackle (202) into position and attach bolt (201), washer (217) and nut (218).
   - Do not tighten.

NOTICE: See "Notice" on page 3C-1 of this section.

10. Spring to the axle.
    - For V1 and V2 models and the left side of V3 models, attach the lower spacer (226), plate (224), U-bolts (227), washers (223) and nuts (222) (figure 67).
    - For the right side of V3 models, attach the lower spacer (226), plate (224), U-bolt (227), washers (223), bolts (248) and nuts (222) (figure 67).

Tighten

- Nuts (222) and bolts (248) in sequence (2-4-1-3) to 203 N•m (150 ft. lbs.).
- Nuts (239) to 122 N•m (90 ft. lbs.).
- Nuts (218) to 68 N•m (50 ft. lbs.).

- Lower the vehicle.

WHEEL BEARING ENDPLAY

R-P Models	0.03-0.13 mm (0.0012-0.005 inches)
V Models	0.025-0.25 mm (0.001-0.010 inches)
P Motorhome w/FS3	0.013-0.20 mm (0.0005-0.008 inches)

TB-3079-2A

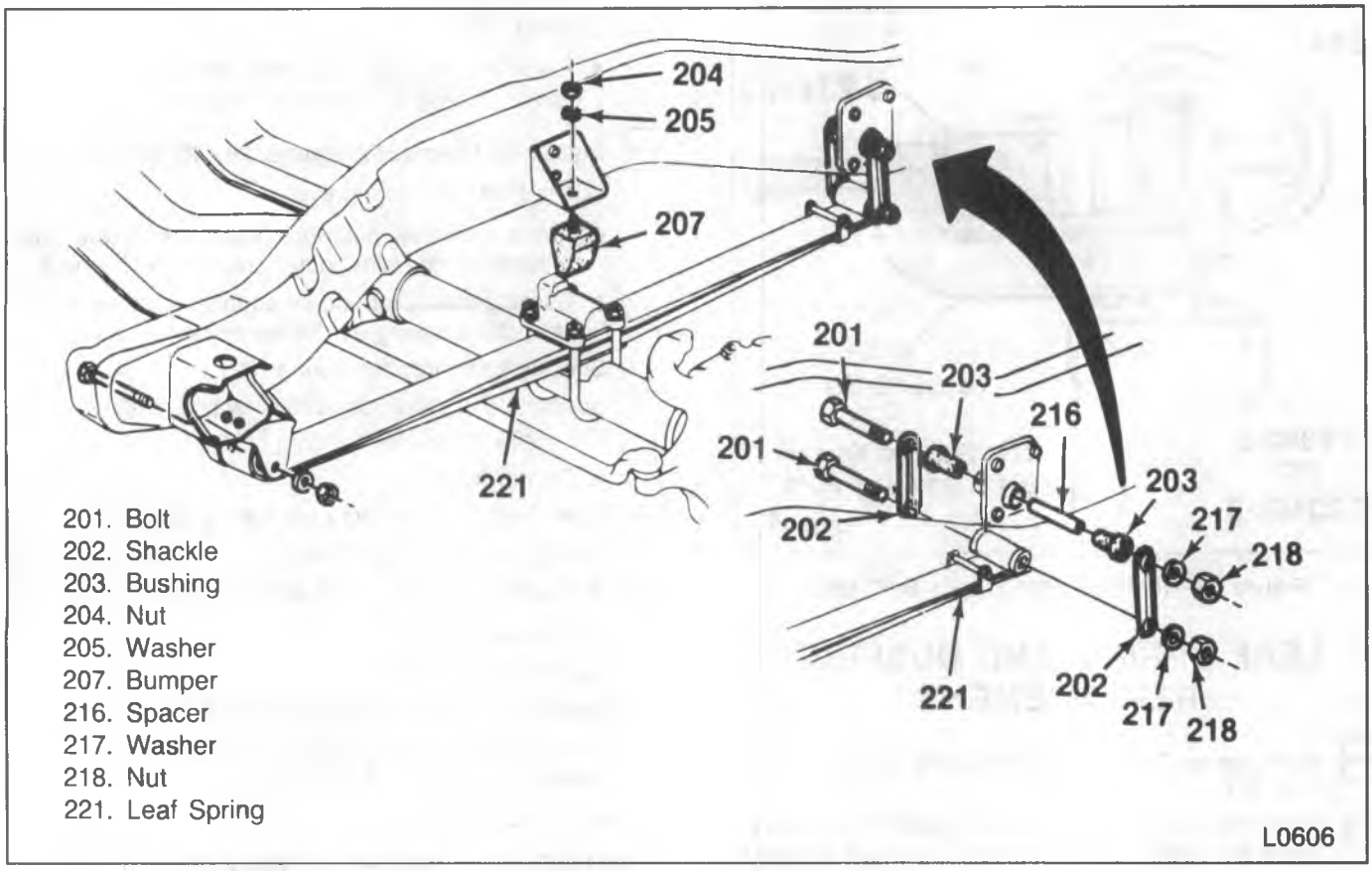

Figure 67 – Leaf Spring Attaching Parts

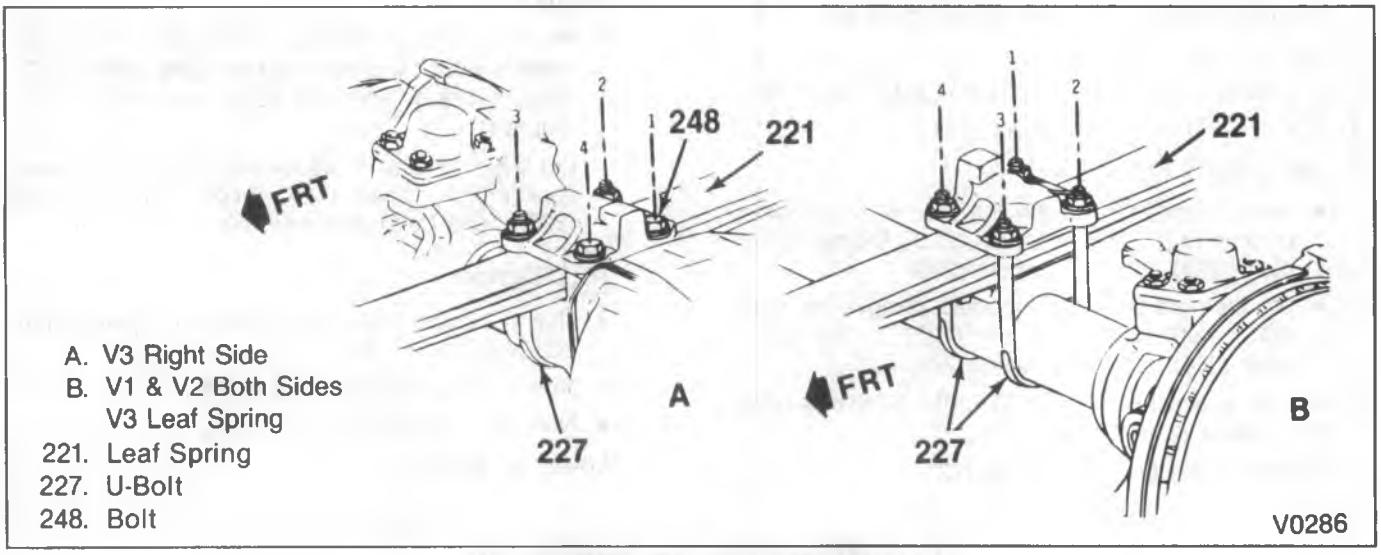

Figure 68 – U-Bolt Tightening Order

SPECIFICATIONS

FASTENER TORQUE

INDEPENDENT FRONT SUSPENSION

R and P-Models	N·m	Ft. Lbs.
Shock Absorber to Frame	190	140
Shock Absorber to Lower Control Arm	80	59
Stabilizer to Frame	33	24
Stabilizer to Lower Control Arm	33	24
Steering Knuckle to Upper Ball Joint		
R1	68	50
All Other Models	122	90
Steering Knuckle to Lower Ball Joint	122	90
Ball Joint Cotter Pin Alignment		
R1 Upper Ball Joint — Maximum	122	90
All Other Ball Joints — Maximum	176	130
Splash Shield to Knuckle	13	10
Lower Control Arm Bushings (Exc. R1)	379	280
Lower Pivot Shaft End Nuts (R1)	95	70
Lower Pivot Shaft U-Bolt Nuts	115	85
Upper Control Arm Bushings (R1)	257	190
Upper Pivot Shaft End Nuts (R1)	156	115
Upper Pivot Shaft Thru-Bolt Nuts		
R1	95	70
All Other Models	142	105
Upper Bolt Joint to Upper Control Arm	25	18
Crossmember to Bottom Frame Rail		
Motorhome	291	215
Van Models with JF9 and R3 with F42	176	130
All Other Models	122	90
Crossmember to Frame Side Rails		
P-Models with JF9; P30 Motorhome; R3 with F42	135	100
All Other Models	88	65
Suspension Bumper		
R1	20	15
All Other Models	26	19
Crossmember to Support Struts	81	60

TB-3024-2A

SPECIFICATIONS (CONT.)

I-BEAM (RPO FS3) FRONT SUSPENSION

P30 Models		
Shock Absorber to Frame	108	80
Shock Absorber to Axle	45	33
Stabilizer to Frame	29	21
Stabilizer to Stabilizer Link	63	47
Splash Shield to Anchor Plate	16	12
Steering Arm to Knuckle	312	230
Caps to Steering Knuckle	7	5
Lock Pin to Steering Knuckle	40	29
Spring to Hanger Nuts	125	92
Spring to Shackle Nuts	125	92
Spring to Axle U-Bolt Nuts	109	80
Shackle to Frame Nuts	125	92
Suspension Bumper	34	25

FOUR WHEEL DRIVE FRONT SUSPENSION

V-Models		
Shock Absorber to Frame	88	65
Shock Absorber to Axle		
With 275 Quad Shocks	120	88
All Other Models	88	65
Stabilizer to Frame		
V3	70	52
All Other Models	95	70
Stabilizer to Spring Plate	180	133
Steering Knuckle to Upper Ball Joint (Exc. V3)	135	100
Steering Knuckle to Lower Ball Joint (Exc. V3)	40	30
Ball Joint Cotter Pin Alignment (Exc. V3)		
Upper Ball Joint — Maximum	176	130
Adjusting Ring to Spindle (Exc. V3)	70	50
Caps to Steering Knuckle (V3 only)	108	80
Ball Joint to Knuckle (V3 only)	745	550
Anchor Plate to Knuckle	88	65
Steering Arm to Knuckle	120	90
Lock Pin to Steering Knuckle	217	160
Spring to Hanger Nuts	122	90
Spring to Shackle Nuts	122	90
Spring to Axle U-Bolt Nuts	203	150
Shackle to Frame Nuts	68	50
Suspension Bumper	20	15
To Frame	33	24
To Frame Bracket	20	15

GMTB-3025-2A

SPECIAL TOOLS

1. J 24435-A

2. J 23448

3. J 23454-D

4. J 26878-A

5. J 6368

6. J 7817

7. J 6893-D

8. J 6627-A

9. J 9519-D

10. J 23742

11. J 22301

12. J 21465-17

13. J 8092

14. J 23447

15. J 9746-02

16. J 23028-01

1. Needle Bearing Installer
2. Inner Bearing Race Installer
3. Ball Joint Remover And Installer
4. Wheel Bearing Nut Wrench
5. Outer Bearing Race Installer
6. Front Pinion Bearing Installer
7. Wheel Bearing Nut Wrench
8. Wheel Stud And Tie Rod Remover
9. Ball Joint Remover And Installer
10. Ball Joint Separator
11. Ball Joint Bearing Seal Installer
12. Bearing Installer
13. Driver Handle
14. Ball Stud Nut Wrench
15. Hub/Rotor Support
16. Spring Remover

V0287

SPECIAL TOOLS (CONT.)

17 J 8457

18 J 8849

19 J 29040

20 J 23445-A

21 J 26871

22 J 28871

23 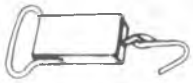 J 35999

17. J 8457 Wheel Bearing Race Installer
18. J 8849 Wheel Bearing Race Installer
19. J 29040 Outer Bearing Race Installer
20. J 23445-A Needle Bearing Installer
21. J 26871 Ball Joint Socket
22. J 28871 Ball Joint Installer
23. J 35999 Spring Scale 0-50 lbs.

V0288

SECTION 3D

REAR SUSPENSION

NOTICE: When fasteners are removed, always reinstall them at the same location from which they were removed. If a fastener needs to be replaced, use the correct part number for that application. If the correct part number fastener is not available, a fastener of equal size and strength (or stronger) may be used. Fasteners that are not reused and those requiring thread locking compound will be called out. The correct torque value must be used when installing fasteners that require it. If the above conditions are not followed, parts or system damage could result.

CONTENTS

SUBJECT	PAGE
Description	3D-1
On-Vehicle Service	3D-1
Shock Absorber Replacement	3D-1
Stabilizer Shaft Replacement	3D-1
Leaf Spring Assembly Replacement	3D-6
Bushing Replacement	3D-8
Specifications	3D-9

DESCRIPTION

All Vehicles use a leaf spring and solid rear axle suspension system (figures 1 through 4).

The rear axle assembly is attached to multi-leaf springs by U-bolts. The front ends of the springs are attached to the frame at the front hangers through rubber bushings. The rear ends of the springs are attached to the frame by the use of shackles which allow the springs to change their length while the vehicle is in motion.

Ride control is provided by two identical direct double-acting shock absorbers angle-mounted between the frame and brackets attached to the axle tubes.

ON-VEHICLE SERVICE

SHOCK ABSORBER REPLACEMENT

Remove or Disconnect (Figures 1 through 4)

- Raise the vehicle on a hoist.

1. Nut (16).
2. Spring washer (15).
3. Washer (21).
4. Shock absorber from the frame.
5. Nut (11), spring washer (12) and bolt (14).
6. Shock absorber (13) from the axle.

Install or Connect (Figures 1 through 4)

NOTICE: For steps 5 and 7, refer to the "Notice" on page 3D-1 of this section.

1. Shock absorber (13) to the frame.
2. Washer (3) (R/V Models).
3. Spring washer (15) and/or washer (21).
4. Nut (16).

Tighten

- Nut (16) to "Specifications" at the end of this section.

5. Shock absorber (13) to the axle.
   - Line up shock absorber with the axle bracket.
6. Bolt (14), spring washer (12), and nut (11).

Tighten

- Nut (11) to 155N•m (114 ft. lbs.).

- Lower the vehicle to the ground.

STABILIZER SHAFT REPLACEMENT

Remove or Disconnect (Figures 5 and 6)

- Raise the vehicle on a hoist.

1. Stabilizer shaft (108) from the frame.
2. Nut (120), washer (116), bolt (115), grommets (117), washer (116) and link (118) (R3 Models only).
3. Nuts (105), washers (106), bolts (111) and clamp (110) (P3 Models only).
4. Stabilizer bar (108) from the anchor plates (107).
5. Nuts (105), washers (106) bolts (111), and the clamps (110).
6. Insulators (109) from the stabilizer bar (108).

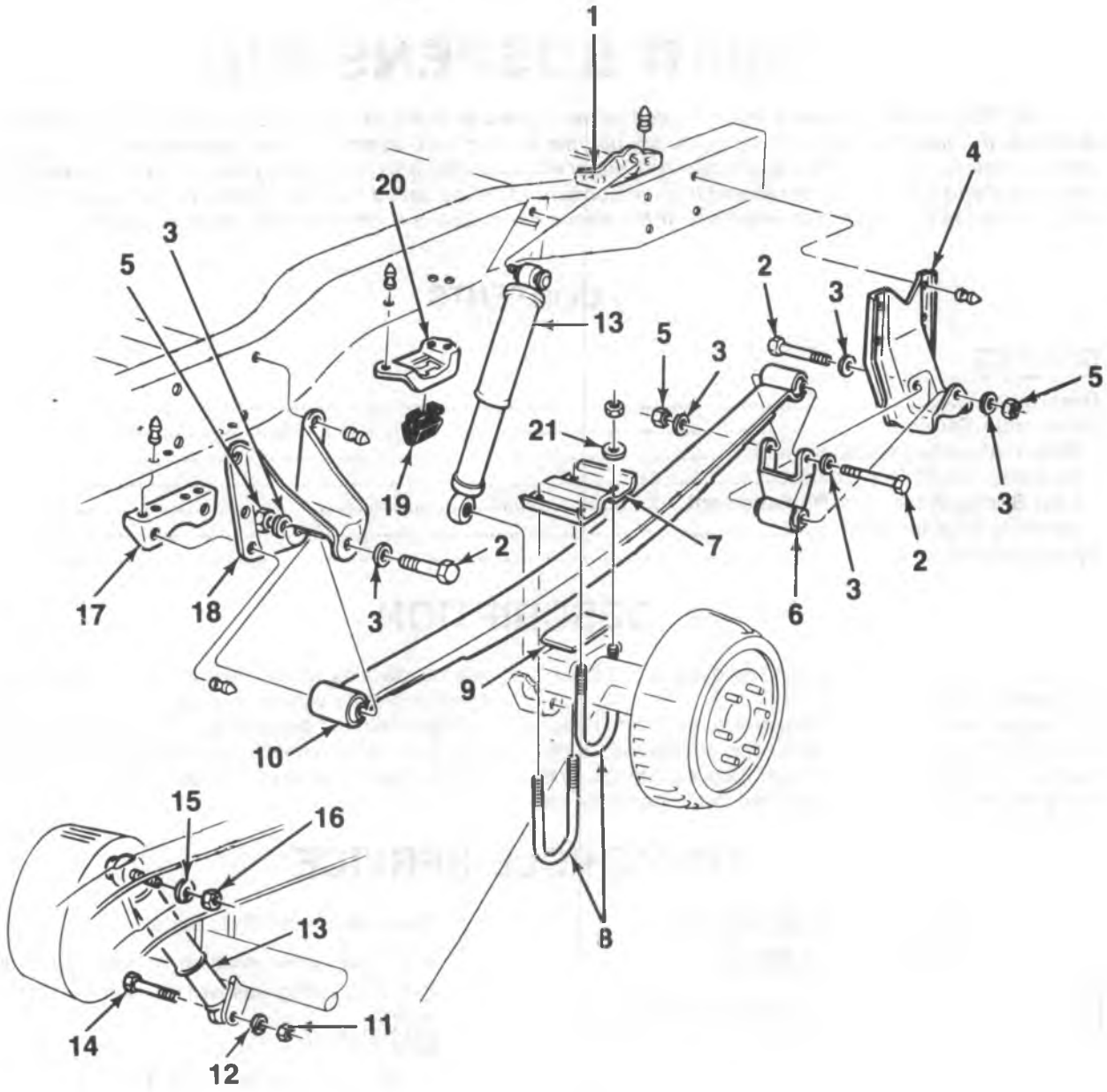

1. Bracket
2. Bolt
3. Washer
4. Rear Hanger
5. Nut
6. Rear Shackle
7. Anchor Plate
8. U-bolt
9. Shim
10. Leaf Spring
11. Nut
12. Spring Washer
13. Rear Shock Absorber
14. Bolt
15. Spring Washer
16. Nut
17. Front Hanger Support
18. Front Hanger
19. Axle Bumper
20. Bumper Bracket
21. Washer
22. Nut

L00535

Figure 1—Rear Suspension (R/V1, 2 Suburban and Utility Vehicles)

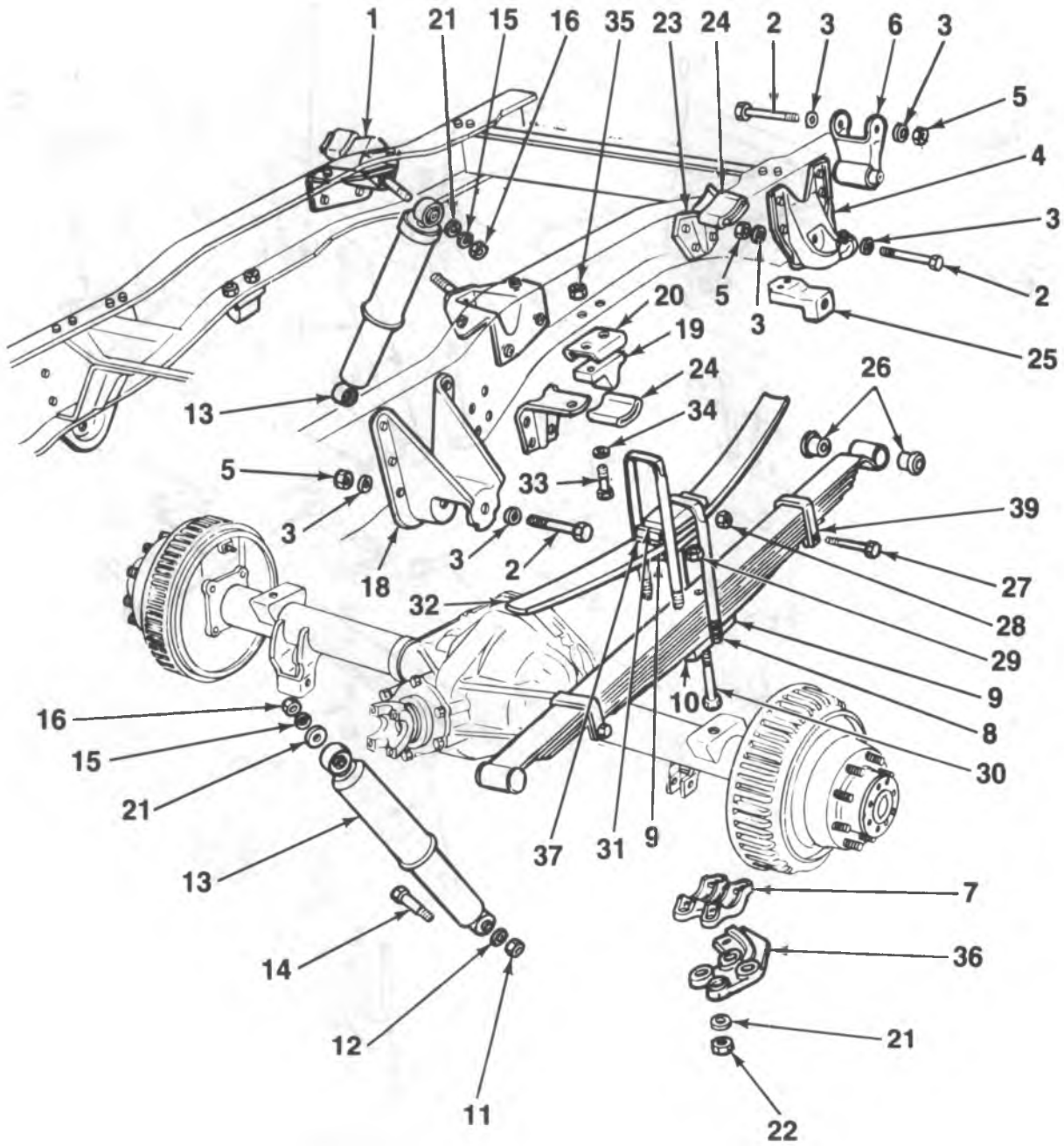

1. Bracket
2. Bolt
3. Washer
4. Rear Hanger
5. Nut
6. Rear Shackle
7. Anchor Plate
8. U-bolt
9. Shim
10. Leaf Spring
11. Nut
12. Spring Washer
13. Rear Shock Absorber
14. Bolt
15. Spring Washer
16. Nut
18. Front Hanger
19. Axle Bumper
20. Bumper Bracket
21. Washer
22. Nut
23. Bracket
24. Cushion
25. Rear Hanger Reinforcement
26. Leaf Spring Eye Bushing
27. Bolt
28. Nut
29. Nut
30. Bolt
31. Spacer
32. Optional Rear Auxiliary Spring
33. Bolt
34. Washer
35. Nut
36. Stabilizer Bar Anchor
37. Spacer
39. Spring Clip

L00536

Figure 2—Rear Suspension (R/V3 Models)

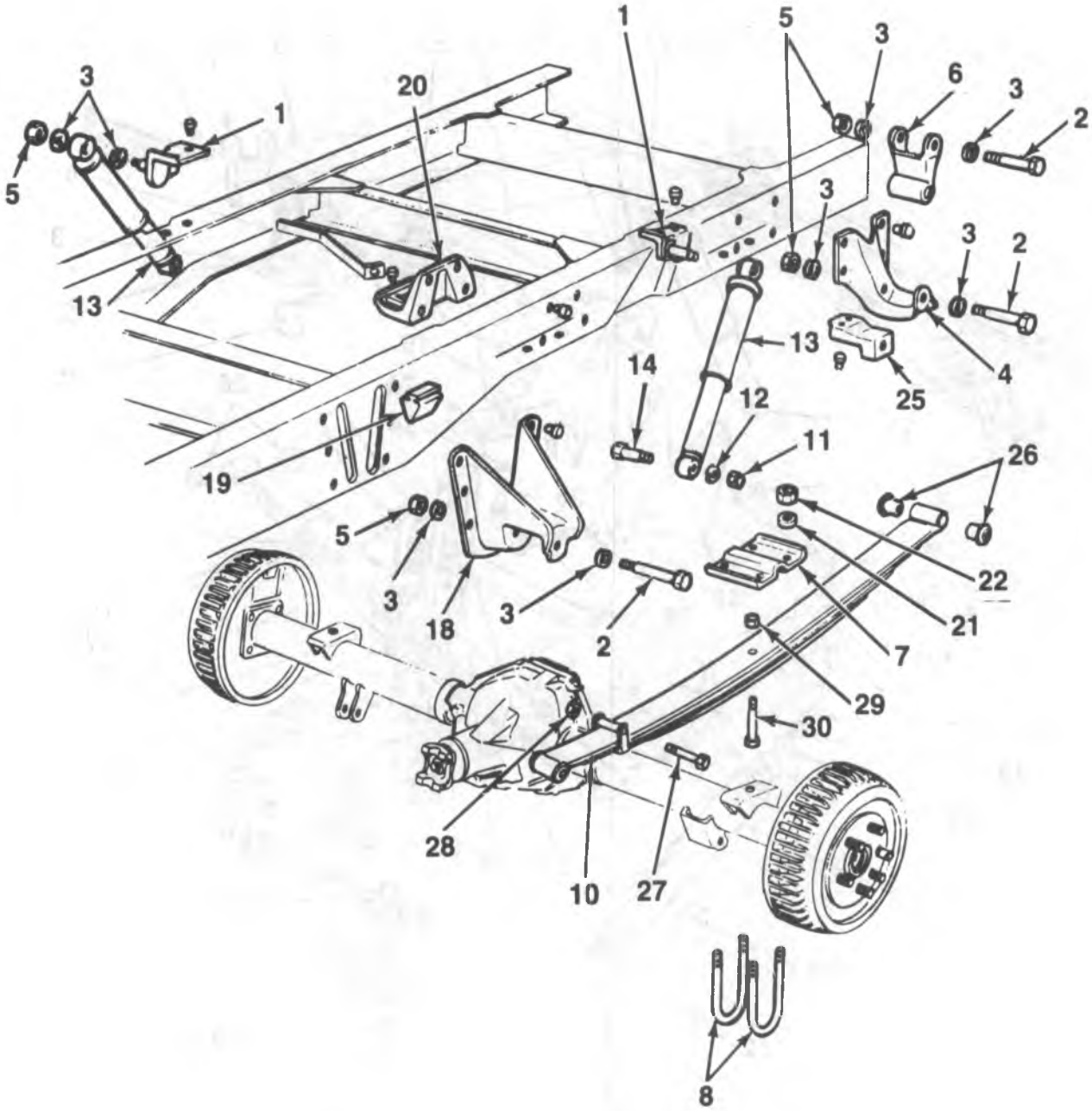

1. Bracket
2. Bolt
3. Washer
4. Rear Hanger
5. Nut
6. Rear Shackle
7. Anchor Plate
8. U-bolt
10. Leaf Spring
11. Nut
12. Spring Washer
13. Rear Shock Absorber
14. Bolt
18. Front Hanger
19. Axle Bumper
20. Bumper Bracket
21. Washer
22. Nut
25. Rear Hanger Reinforcement
26. Leaf Spring Eye Bushing
27. Bolt
28. Nut
29. Nut
30. Bolt

L00539

Figure 3—Rear Suspension (P3 Motorhome Models)

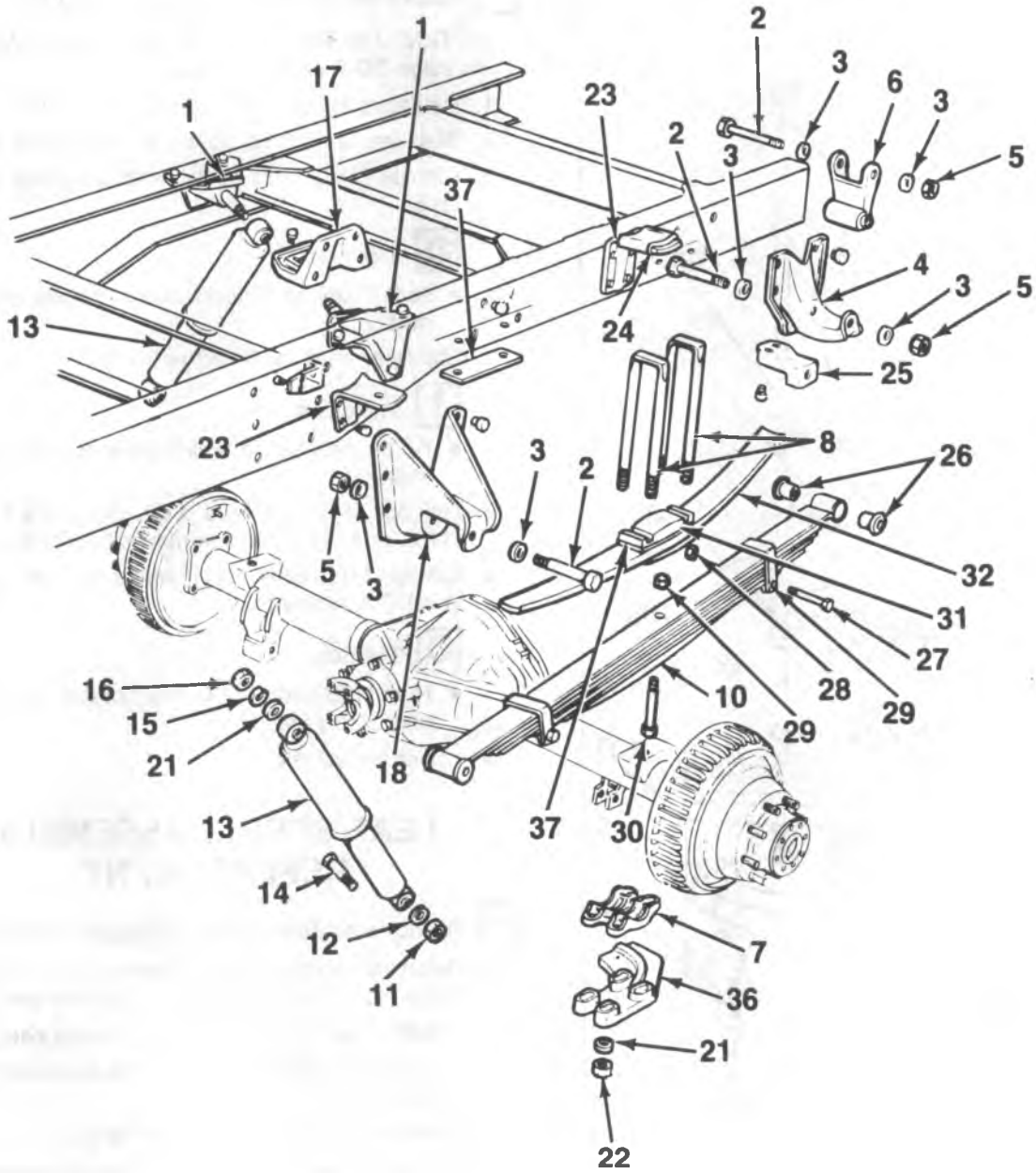

1. Bracket
2. Bolt
3. Washer
4. Rear Hanger
5. Nut
6. Rear Shackle
7. Anchor Plate
8. U-bolt
10. Leaf Spring
11. Nut
12. Spring Washer
13. Rear Shock Absorber
14. Bolt
15. Spring Washer
16. Nut
17. Front Hanger Support
18. Front Hanger
21. Washer
22. Nut
23. Bracket
24. Cushion
25. Rear Hanger Reinforcement
26. Leaf Spring Eye Bushing
27. Bolt
28. Nut
29. Nut
30. Bolt
31. Spacer
32. Optional Rear Auxiliary Spring
36. Stabilizer Bar Anchor
37. Anchor
39. Spring Clip

L00540

Figure 4—Rear Suspension (P3 Commercial Models)

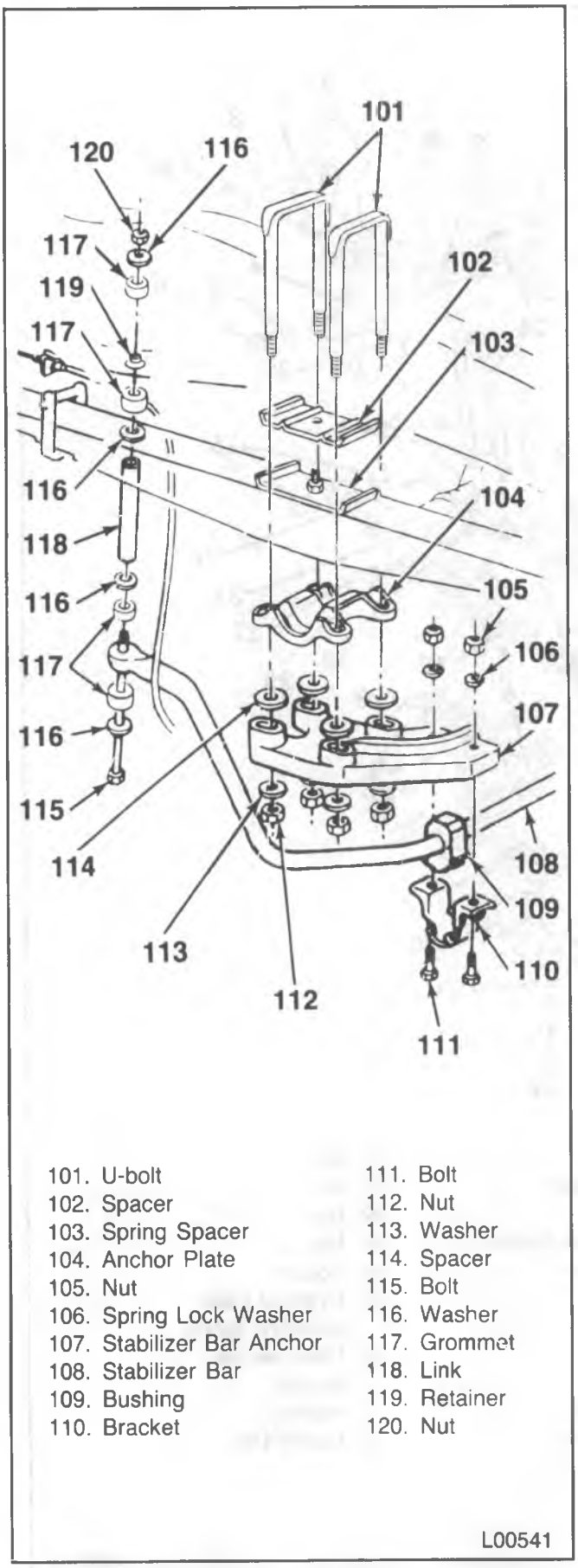

101. U-bolt	111. Bolt
102. Spacer	112. Nut
103. Spring Spacer	113. Washer
104. Anchor Plate	114. Spacer
105. Nut	115. Bolt
106. Spring Lock Washer	116. Washer
107. Stabilizer Bar Anchor	117. Grommet
108. Stabilizer Bar	118. Link
109. Bushing	119. Retainer
110. Bracket	120. Nut

Figure 5—Rear Stabilizer Attachments (R3 Models)

Install or Connect (Figures 5 and 6)

NOTICE: For steps 3 and 6, refer to the "Notice" on page 3D-1 of this section.

1. Insulators (109) to the stabilizer bar (108).
2. Stabilizer shaft (108) to the anchor plates (107).
3. Clamps (110), bolts (111), washers (106), and nuts (105).

Tighten

- Nuts (105) to "Specifications" at the end of this section.

4. Stabilizer shaft (108) to the frame.

Important

- Route the parking brake cable over the stabilizer shaft.

5. Link bolt (115), washers (116), grommets (117), link (118), retainer (119) and nut (120) (R3 Models).
6. Clamp (110), bolts (111), washers (106), and nuts (105) (P3 Models).

Tighten

- Nuts (120 and 105) to the "Specifications" at the end of this section.

- Lower the vehicle.

LEAF SPRING ASSEMBLY REPLACEMENT

Remove or Disconnect (Figures 1 through 4)

- Raise the vehicle on a hoist and support the rear axle independently to relieve tension on the leaf springs.

1. Stabilizer bar from the vehicle (if equipped).
   - Refer to "Stabilizer Shaft Replacement" in this section.
2. Leaf spring (10) from the rear hanger (25).
   - Loosen, but do not remove, the spring-to-shackle nut and bolt.
3. Nut and the bolt securing the shackle to the rear hanger (25).
4. Nut and the bolt securing the leaf spring (10) to the front hanger (18).
5. Leaf spring (10) from the front hanger (18).
6. Nut and bolt securing the shackle to the leaf spring.
7. Shackle (6) from the leaf spring (10).
8. Nuts (22), and washers (21).
9. Rear stabilizer anchor (36) (if equipped), anchor plate, spacers, shims, and the auxiliary spring (32) (if equipped).
10. U-bolts (8).
11. Leaf spring from the vehicle.

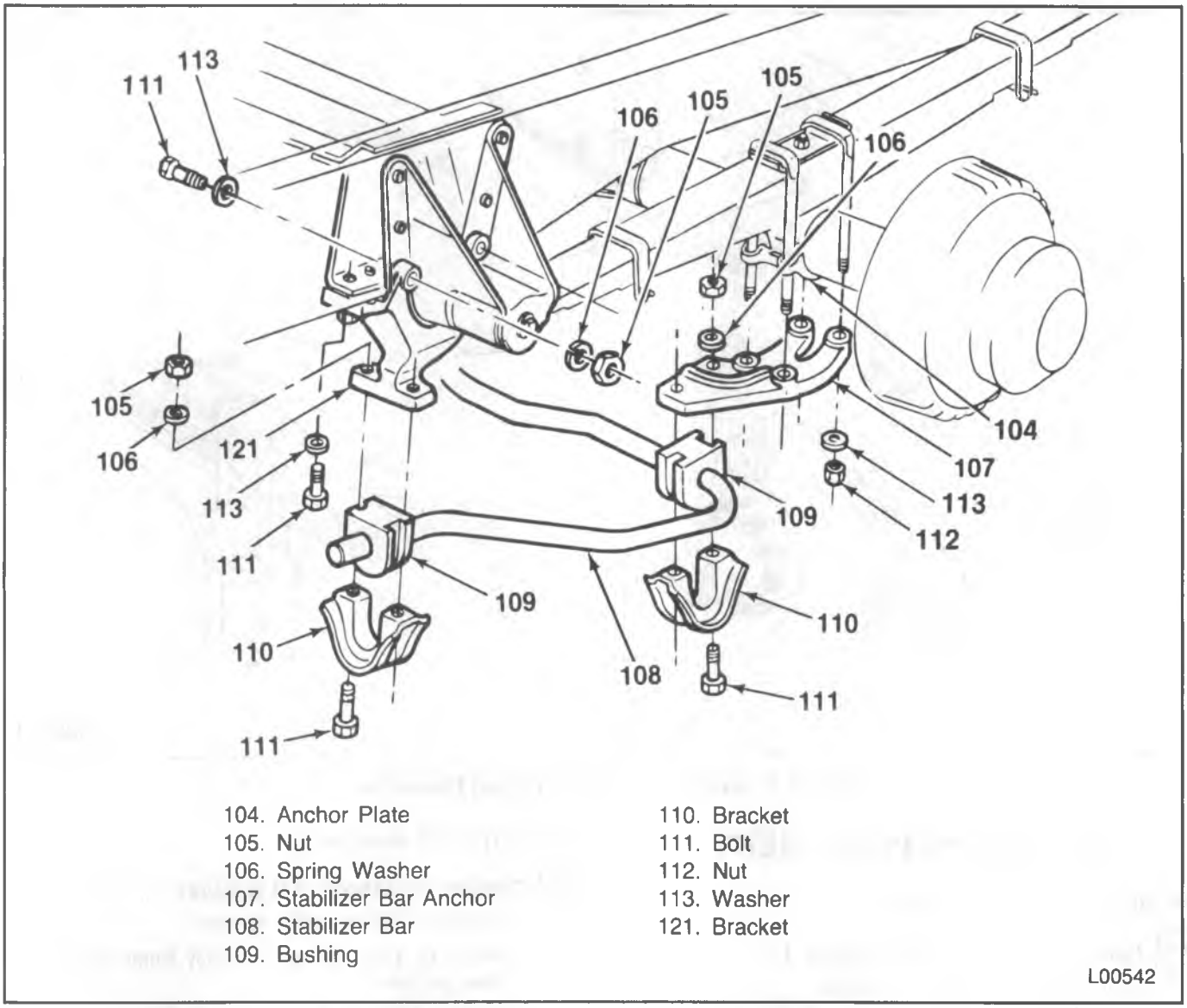

Figure 6—Rear Stabilizer Attachments (P-Models)

Install or Connect (Figures 1 through 4, and 7)

NOTICE: For steps 3 and 9, refer to the "Notice" on page 3D-1 of this section.

1. Leaf spring (10) to the rear axle.
2. Spacers, shims, auxiliary spring (32) (if equipped) and anchor plate.
3. U-bolts (8), washers (21), and nuts (22).

   Tighten

   - Nuts (22) in the sequence as shown in Figure 7, initially to 25 N•m (18 ft. lbs.). Then, final torque in the sequence as shown in Figure 7 to the "Specifications" at the end of this section.
4. Shackle (6) to the leaf spring (10).
5. Bolt (2), washers (3), and nuts (5), making sure the bolt is positioned correctly (figures 1 through 4).
   - Do not tighten.
6. Leaf spring to the front hanger (18).
7. Bolt (2), washers (3), and nut (5).
   - Do not tighten.
8. Leaf spring to the rear hanger (25).
9. Bolt (2), washers (3), and nut (5).

   Tighten

   - Nuts (5) and bolts (2) to "Specifications" at the end of this section.
10. Stabilizer bar to the vehicle (if equipped).
    - Refer to "Stabilizer Shaft Replacement" in this section.

- Lower the support on the rear axle. Lower the vehicle to the ground.

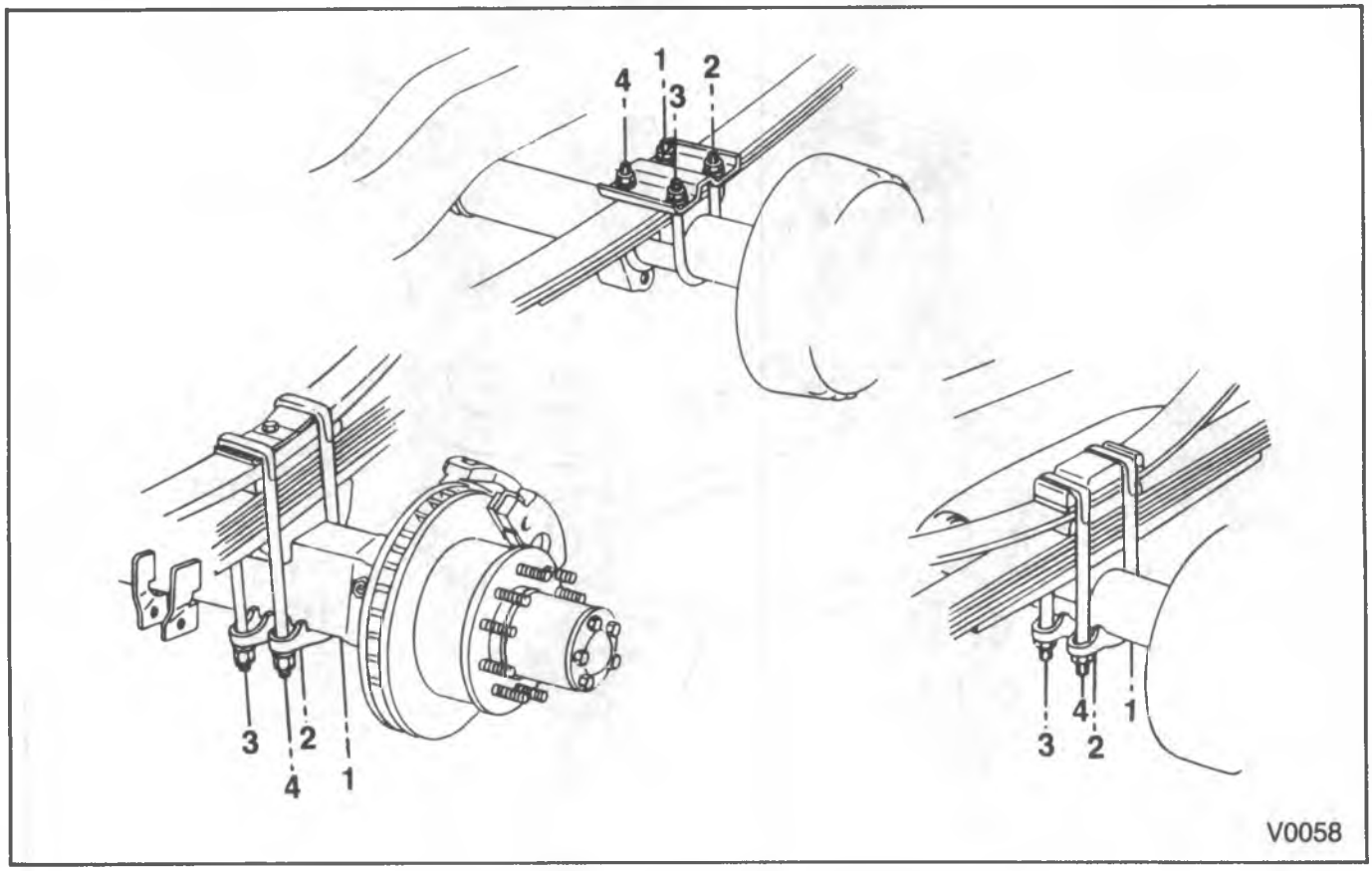

Figure 7—Spring to Axle Tightening Sequence

BUSHING REPLACEMENT

PRESS OUT TYPE BUSHINGS

Remove or Disconnect (Figure 1)

1. Leaf spring (10) from the vehicle.
   - Refer to "Leaf Spring Assembly Replacement" in this section.
2. Bushing from the leaf spring (10).
   - Place the leaf spring in a press and press out the bushing.

Install or Connect (Figure 1)

1. Bushing into the leaf spring (10).
   - Use a press to properly position the bushings.
2. Leaf spring (10) to the vehicle.
   - Refer to "Leaf Spring Assembly Replacement" in this section.

PRY OUT TYPE BUSHINGS

Remove or Disconnect (Figures 2, 3 and 4)

1. Leaf spring (10) from the vehicle.
   - Refer to "Leaf Spring Assembly Replacement" in this section.
2. Bushings (26) from the leaf spring (10).
   - Pry the bushings out of each side of the spring eye.

Install or Connect (Figures 2, 3 and 4)

1. Bushings (26) into the leaf spring (10).
   - Press each bushing (26) into its side of the spring eye.
2. Leaf spring (10) onto the vehicle.
   - Refer to "Leaf Spring Assembly Replacement" in this section.

SPECIFICATIONS

FASTENER TORQUE

FASTENER NAME	TORQUE N•m (FT. LBS.)							
	R10/15	R20/25	R30/35	V10/15	V20/25	V30/35	P20/25	P30/35
Shock Absorber To Frame Nut	190 (140)	*190 (140)	70 (52)	190 (140)	190 (140)	70 (52)	33 (24)	70 (52)
Shock Absorber To Axle Nut	155 (114)	*155 (114)	155 (114)	155 (114)	155 (114)	155 (114)	155 (114)	155 (114)
Stabilizer Bar To Frame Nut	—	—	**	—	—	—	—	29 (21)
Stabilizer Bar To Anchor Nut	—	—	33 (24)	—	—	—	—	29 (21)
Stabilizer Bar Bracket To Hanger	—	—	—	—	—	—	—	41 (30)
Stabilizer Bar Bracket To Frame	—	—	—	—	—	—	—	33 (24)
Anchor Plate To U-Bolt Nut (U-Bolts Facing Up)	170 (125)	170 (125)	170 (125)	170 (125)	170 (125)	170 (125)	170 (125)	—
Anchor Plate To U-Bolt Nut (U-Bolts Facing Down)	200 (147)	200 (147)	200 (147)	200 (147)	200 (147)	200 (147)	—	***200 (147)
Spring To Hanger Nut	125 (92)	125 (92)	125 (92)	125 (92)	125 (92)	125 (92)	125 (92)	N/A
Spring To Hanger Bolt	150 (110)	150 (110)	150 (110)	150 (110)	150 (110)	150 (110)	150 (110)	●150 (110)
Spring To Shackle Nut	125 (92)	125 (92)	125 (92)	125 (92)	125 (92)	125 (92)	125 (92)	●125 (92)
Spring To Shackle Bolt	150 (110)	150 (110)	150 (110)	150 (110)	150 (110)	150 (110)	150 (110)	●150 (110)
Shackle To Hanger Nut	125 (92)	125 (92)	125 (92)	125 (92)	125 (92)	125 (92)	125 (92)	●125 (92)
Shackle To Hanger Bolt	150 (110)	150 (110)	150 (110)	150 (110)	150 (110)	150 (110)	150 (110)	●150 (110)

● For Models with RPO JF9 or P318 or 320(32) Torque Spring to Hanger Bolt to 200 N•m (147 ft. lbs.) and Tighten Shackle Fasteners to 135 N•m (99 ft. lbs).
* Crew Cab Model Torque is 70 N•m (52 ft. lbs.) for Shock to Frame, and 155 N•m (114 ft. lbs.) for Shock to Axle.
** Tighten the Nut to the Unthreaded Portion of the Link Bolt.
*** Torque is 240 N•m (177 ft. lbs.) when Equipped with RPO JF9.

GMTB-3028-2A

PARTS INFORMATION

PART NAME	GROUP
Shock Absorber	7.345
Spring Assembly	7.503
Spring Hanger	7.112
Anchor Plate	7.518
U-Bolt	7.516
Shackle	7.523
U-Bolt Spacer	7.518
Shackle and Spring Bushing	7.504
Stabilizer Shaft	7.241
Stabilizer Shaft Anchor	7.242
Stabilizer Shaft Bushing	7.243

GMTB-3142-2A

SPECIFICATIONS (CONT.)

STABILIZER SHAFT

APPLICATION	RPO OR STD EQUIPMENT	SIZE (mm)
R/V1	STD	27
R/V2	STD	27
R/V2	F58	32
R/V3	STD	N/A
R/V3	F59	27
R/V3	F58	32

N/A — Not available as standard equipment. R/V3 models will only receive a stabilizer shaft if ordered as an option (F58 or F59).

GMTB-3143-2A

LEAF SPRINGS

APPLICATION	RPO OR STD EQUIPMENT	NUMBER OF LEAFS
R1	STD	5
V1	STD	5
R2	STD	7
V2	STD	7
R/V3	STD	9
R/V3	G52	10
R/V3	G60	10

GMTB-3144-2A

SECTION 3E

WHEELS AND TIRES

NOTICE: When fasteners are removed, always reinstall them at the same location from which they were removed. If a fastener needs to be replaced, use the correct part number fastener for that application. If the correct part number fastener is not available, a fastener of equal size and strength (or stronger) may be used. Fasteners that are not reused, and those requiring thread locking compound will be called out. The correct torque value must be used when installing fasteners that require it. If the above conditions are not followed, parts or system damage could result.

CONTENTS

SUBJECT	PAGE
Description	3E- 1
Certification Label	3E- 1
Tire Load Limits And Inflation Pressure	3E- 2
Tire Replacement	3E- 2
Tire Chain Usage	3E- 2
Puncture-Sealing Tires	3E- 3
Diagnosis	3E- 4
Checking Wheel And Tire Runout	3E- 4
Measuring Wheel And Tire Runout	3E- 4
On-Vehicle Service	3E- 8
Excessively Tight Wheels	3E- 8
Separating The Tire From The Wheel	3E- 8
Mounting The Tire On The Wheel	3E- 8
Installing The Wheel And Tire Assembly	3E- 9
Aluminum Wheel Refinishing	3E-10
Aluminum Wheel Porosity Repair	3E-10
Wheel And Tire Balancing	3E-11
Spare Tire Carriers	3E-11
Specifications	3E-15
Tire Load Limits And Inflation Pressure	3E-15
Wheel Codes And Specifications	3E-15
Wheel Stud Nut Torque (Single Front And Rear Wheels)	3E-15
Wheel Stud Nut Torque (Single Front And Dual Rear Wheels)	3E-15

DESCRIPTION

This section details special service procedures that are not covered in the vehicle's Owner's Manual. For jacking instructions, basic tire changing and rotation instructions, and a detailed explanation of all other owner oriented information, refer to the proper section in the vehicle Owner's Manual.

CERTIFICATION LABEL

The certification label contains information used to determine which tire size and type the vehicle uses. For further information, refer to GENERAL INFORMATION (SEC. 0A).

TIRE LOAD LIMITS AND INFLATION PRESSURE

The factory installed wheels and tires are designed to handle loads up to and including their rated load capacity when inflated to the recommended inflation pressures. Refer to "Tire Load Limits And Inflation Pressure" at the end of this section.

Correct tire pressures and driving techniques influence tire life. Underinflated tires can cause handling problems, poor fuel economy, shortened tire life, and tire overloading. Heavy cornering, excessively rapid acceleration, and unnecessary braking also increase tire wear.

Important

- The use of wheels and/or tires with higher load capacity ratings than originally equipped on the vehicle will not increase the Gross Axle Weight Rating (GAWR) or Gross Vehicle Weight Rating (GVWR) of the vehicle.

TIRE REPLACEMENT

CAUTION: Do not mix different tire construction types (such as radial, bias, and bias-belted tires) on the vehicle except in emergencies, because vehicle handling could be affected and may result in loss of control.

Some light truck-type tires have a TPC Spec. No. (Tire Performance Criteria Specification Number) molded into the tire sidewall near the tire size marking. This shows that the tire meets rigid size and performance standards which were developed for your vehicle. The TPC Spec. No. assures a proper combination of endurance, load capacity, handling, and traction on wet, dry and snow covered surfaces. When tires are replaced with tires having the same TPC Spec. No., the new tires will be compatible with the vehicle. If you intend to replace tires with an all-season tread design, make sure the TPC Spec. Number has a "MS" (Mud and Snow) following the number.

When replacing tires with those not having a TPC Spec. No., use the same size, load range, speed rating and construction type (bias, bias-belted, or radial) as the original tires on the vehicle. (See the Certification Label (RV models) located in or on the vehicle or on the Incomplete Vehicle Document (P models) found in the vehicle. Final Certification label location is determined by the body manufacturer. However, a good place to look for the label would be on the driver's door inner panel behind and below the door handle).

Use of any other size or type tire may affect such things as load carrying capacity, ride, handling, maximum speed capability, speedometer/odometer calibration, vehicle ground clearance, and tire clearance to the body and chassis. If replacing only a single tire, the new tire should be used on the same axle with the least worn tire.

Replace your tires when:

- They are worn to a point where 2/32 inch (1.6 millimeters) or less tread remains, or the cord or fabric is showing. To help detect this, tires may have built-in tread wear indicators that appear between the tread grooves when the tread depth is 2/32 inch (1.6 millimeters) or less. When the indicators appear in two or more adjacent grooves at three spots around the tire, the tire should be replaced.

TIRE CHAIN USAGE

When chains are to be used, most current GM vehicles require SAE Class "S" or SAE Class "U" tire chains (figure 1). These may also be designated as 1100 Series, Type PL, 1200 Series, Type "P", or 1800 Series Lug Reinforced tire chains. These chains are specially designed to limit the "fly off" effect that occurs when the wheel rotates.

Manufacturers of tire chains have a specific chain size for each tire size to ensure proper fit when installed. Therefore, be sure to purchase the correct chains for the tires on which they are to be used. Rubber adjusters should not be used to take up slack or clearance in chains which are loose due to incorrect size. Always follow the chain manufacturer's installation instruction.

Use of chains may adversely affect handling. When using chains:

- Adjust speed to road conditions.
- Avoid sharp turns.
- Avoid locked-wheel braking in general, to help prevent chain damage to the vehicle.
- Install the chains on the drive tires as tightly as possible, then tighten them again after driving 1/4 to 1/2 mile (0.4 to 0.8 kilometer). The use of chains on the non-drive tires is not recommended; the chains may contact and possibly damage the vehicle. If chains are used on the non-drive tires, be sure there is enough clearance.
- Do not exceed 45 mph (70 km/h), or the chain manufacturer's speed limit, if lower.
- Drive in a restrained manner and avoid large bumps, potholes, severe turns and other maneuvers which could cause tires to bounce up and down.
- Follow any other instructions of the chain manufacturer which do not disagree with the above.

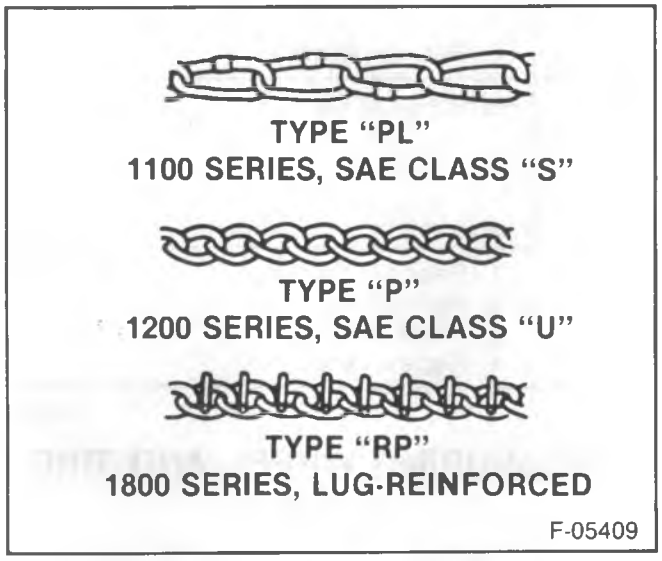

Figure 1—Tire Chain Types

PUNCTURE-SEALING TIRES

The puncture-sealing tire is designed to permanently seal most tread punctures up to 3/16 inch in diameter, so that the tire remains inflated. The actual sealant is made of a special rubber compound which is applied to the tire in the tire manufacturing plant. The sealant only covers the inside of the tire and under the tread area. The sealant is designed to surround the embedded object and seal the puncture at the inner surface of the tire below the tread. If a nail or other puncturing object 3/16-inch in diameter, or less penetrates the tire tread into the sealant layer, it picks up a coating of the sealant. As the puncturing object is either removed or thrown from the tire by centrifugal force, the sealant adheres to it and is pulled into the puncture opening in the tread (figure 2). When the object is completely removed, the sealant fills the entire puncture opening, keeping the tire inflated and forming a permanent seal.

Puncture-sealing tires can be identified by a distinctive marking on the sidewall, and carry a special warranty. Puncture-sealing tires can be serviced with current tire changing and wheel balancing equipment.

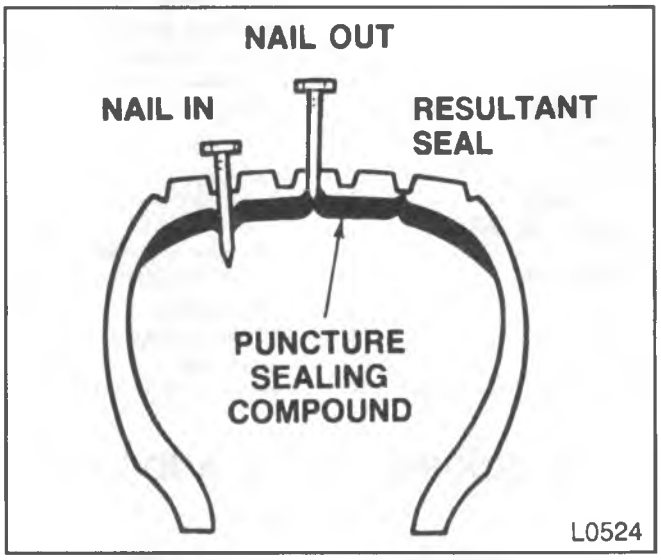

Figure 2—Puncture-Sealing Tire

DIAGNOSIS

The following information will help to identify certain tire-related durability and drivability problems.

PROBLEM	POSSIBLE CAUSE	CORRECTION
Excessive Heel And Toe Wear	High speed driving, excessive use of brakes.	Correct as required, rotate tires regularly.
Excessive Tire Edge(s) Wear	1. Underinflated tires. 2. Vehicle overloaded. 3. High speed cornering. 4. Incorrect toe setting.	1. Inflate to recommended pressure. 2. Correct as required—refer to certification label. 3. Correct as required. 4. Set to correct specifications.
Excessive Tire Wear (Center Of Tread)	Overinflated tires.	Deflate to recommended pressure.
Uneven Tire Wear	1. Improper tire pressure. 2. Incorrect tire and wheel usage. 3. Worn shock absorbers. 4. Front end out of alignment. 5. Loose, worn, or damaged steering linkage, joints, suspension components, bushings and/or ball joints. 6. Out of balance wheel/tire.	1. Inflate to recommended pressure. 2. Install correct tire-wheel combination. 3. Replace shock absorbers. 4. Align the front end. 5. Inspect, repair or replace as required. 6. Balance wheel/tire.
Radial Tire Waddle (Side To Side Movement At Speeds Between 5 and 15 MPH)	Worn tires.	Replace worn tires.
Vibration	1. Out of balance wheel/tire. 2. Tire runout. 3. Wheel runout. 4. Worn tire.	1. Balance wheel/tire. 2. Replace tire. 3. Replace wheel. 4. Replace tire.

D0029

CHECKING WHEEL AND TIRE RUNOUT

Some vehicles are sensitive to tire and wheel assembly runout. Tires that are satisfactory on one vehicle might be unsatisfactory on another. When analyzing vibration problems, it is important to keep this in mind. In addition, different wheel positions on a vehicle may have different sensitivity levels. You should check for wheel runout or total wheel and tire runout in the following cases:

- If the tire and wheel vibration occurs below 40 miles per hour.
- If all wheels are balanced well within one ounce of static balance and five ounces of dynamic balance, and a vibration occurs.
- If there appears to be a bulge in a tire or an out-of-round condition as a tire rotates on a balancer.
- If any wheel damage is noticed.
- If there is a poor wheel fit on the hub and the vehicle exhibits vibration.

MEASURING WHEEL AND TIRE RUNOUT

Runout measurements of the wheel and tire assembly can be taken both on and off the vehicle. These measurements can be taken radially and laterally. A dial indicator equipped with a roller contact point, mounted on a heavy, solid base is the measurement device. J 8001 and J 23672 are available for this procedure.

RADIAL RUNOUT

Radial runout is the egg-shaped difference from a perfect circle. Measure tire radial runout from the center tire tread rib although other tread ribs can be measured as well. The total runout is the reading from the gage, and the high spot is the location of the maximum runout. On a rim, if either flange is beyond specifications, replace the rim (figure 4).

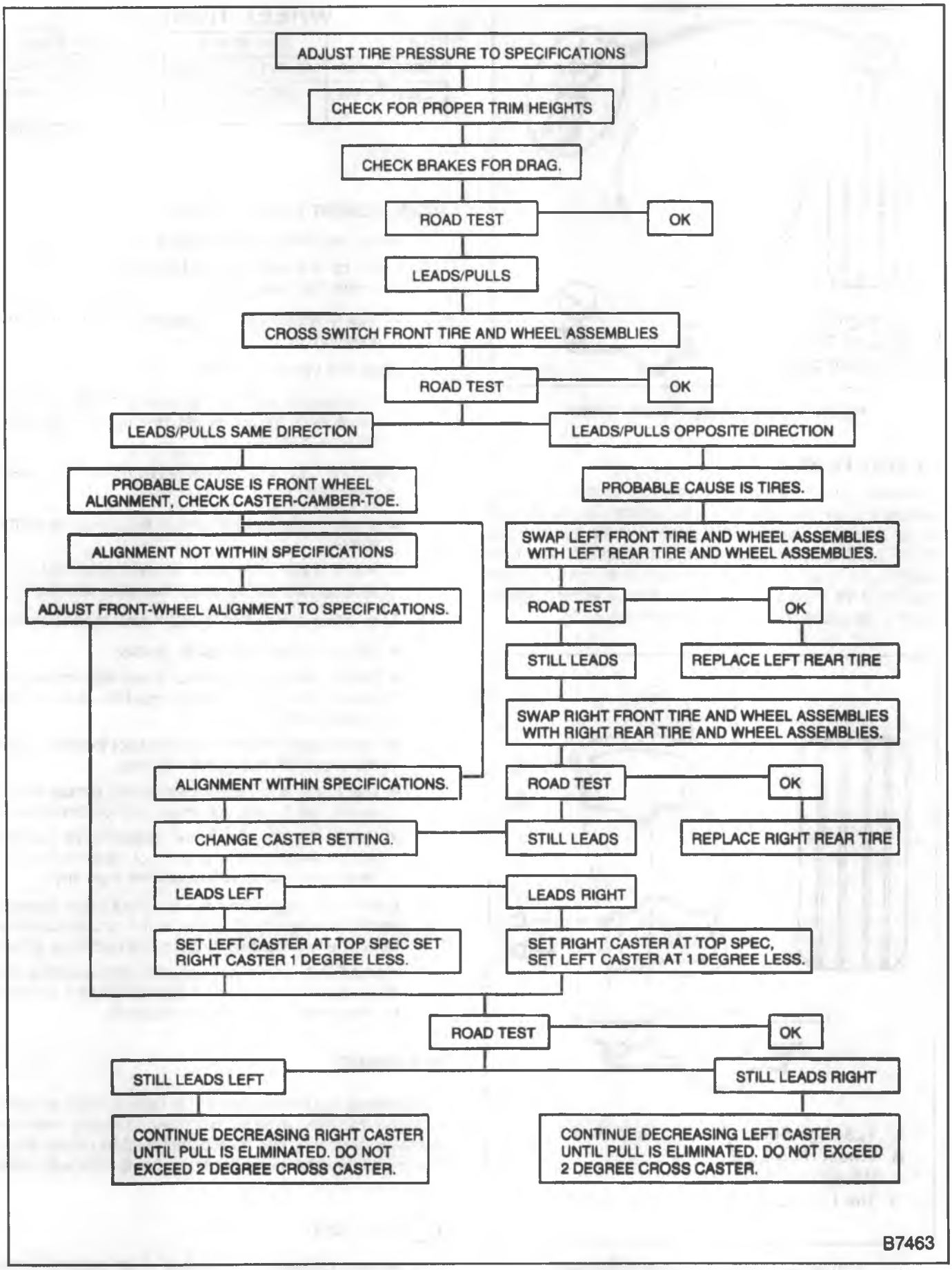

Figure 3—Radial Tire Lead/Pull Diagnosis Chart

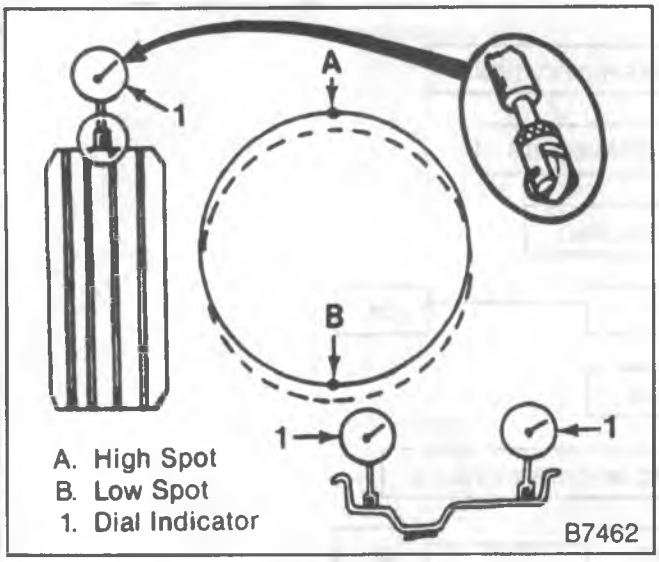

Figure 4—Measuring Radial Runout

LATERAL RUNOUT

Lateral runout is a sideways variation causing a twist or wobble and is measured on a side surface. On the tire and wheel assembly, measure the sidewall of the tire as close to the tread shoulder design edge as possible. The total runout is the reading from the gage, and the high spot is the location of the maximum runout. On a rim, if either flange is beyond specifications, replace the rim (figure 5).

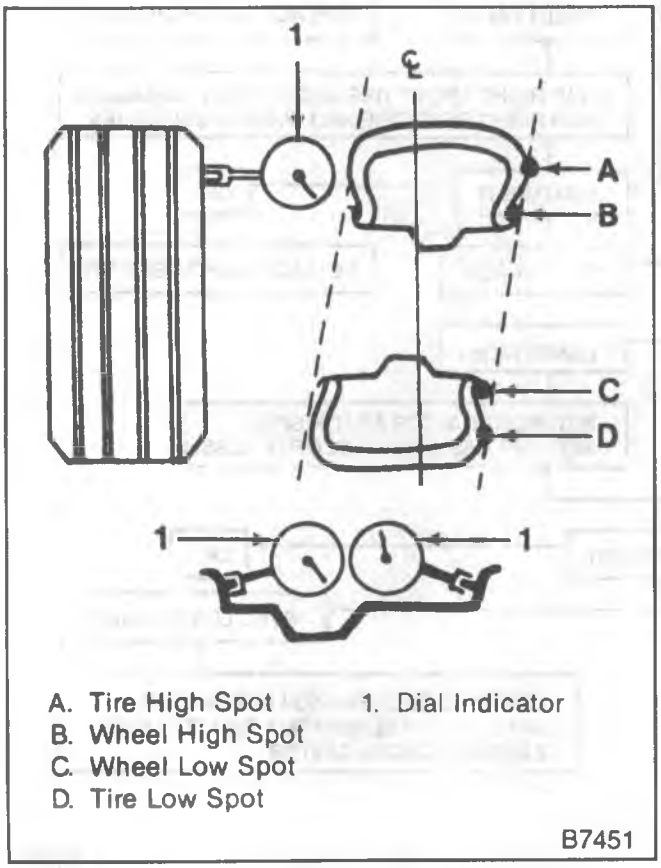

Figure 5—Measuring Lateral Runout

WHEEL RUNOUT

	Steel Wheels	Aluminum Wheels
Radial Runout	1.01 mm (0.04 inches)	0.76 mm (0.03 inches)
Lateral Runout	1.14 mm (0.045 inches)	0.76 mm (0.03 inches)

T2190

MEASUREMENT PROCEDURES

1. Inflate the tires to specifications.
2. Warm up the tires prior to taking measurements to eliminate flat spotting.
   - Newly installed tires usually do not require warming up.
3. Raise the vehicle on a lift.
   - If measurements will be taken off the vehicle, mount each tire and wheel assembly on a dynamic balance machine.
4. Mark the tire and wheel assemblies for exact replacement.
   - Mark a wheel hub bolt and its exact position on the wheel.
   - Mark each tire and wheel assembly for replacement on the exact hub/rotor assembly.
5. Take either a radial or lateral runout measurement.
   - Place the dial indicator in position.
   - Rotate the tire and wheel assembly (or just the wheel) to find its low spot. Adjust the dial indicator to read zero.
   - Rotate again to verify the low spot location — the dial indicator must return to zero.
   - Disregard any instantaneous dial jumps due to welds, paint runs, scratches, etc. on the wheel.
   - Rotate the tire and wheel assembly (or just the wheel) and note the amount of variance (runout) from zero. Locate and mark the high spot.
6. If there is a large difference in runout measurements from ON vehicle to OFF vehicle, the runout problem is likely due to excessive runout of the bolt circle or hub.
7. If measured runouts are not within the specifications (located in "Wheel Runout Specifications"), proceed to "Vectoring" to correct the problem.

VECTORING

Vectoring is a technique used to reduce radial or lateral runout -- and even dynamic balance on tire and wheel assemblies. Vectoring can be accomplished by positioning of the tire on the wheel and positioning of the tire and wheel assembly on the hub/rotor.

Important

- Always rebalance the tire and wheel assembly after vectoring.

Tire to Wheel Vectoring

1. Determine which runout needs to be minimized.
   - Determine visually.
2. If radial runout is the problem, take a measurement on the center tread rib.
   - If the tread is uneven, wrap tape tightly around the tire, record the runout magnitude, and mark the high spot locations (figure 6).

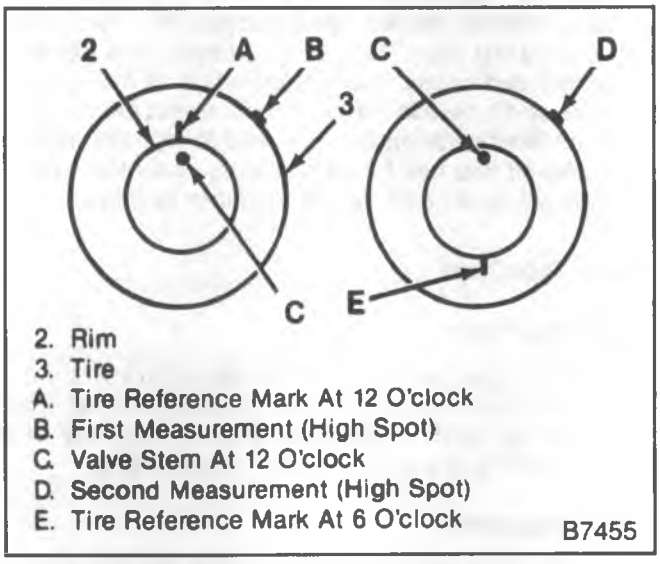

Figure 6—Checking Tire to Wheel Vectoring

3. If lateral runout is the problem, take a measurement on the sidewall just below the edge of the tread shoulder.
   - Record the runout magnitude, and mark the high spot location.
4. Mark the tire sidewall at the valve locations.
   - This is the 12 O'clock position.
   - The location of the high spot is always with respect to the clock location on the wheel.
5. Break the tire and wheel assembly down on a tire mounting machine and rotate the tire 6 hours (180 degrees) on the rim (figure 6).
   - Reinflate the tire and measure the runout in question.
   - Record the magnitude and the location of the high spot. (Valve stem is at 12 O'clock.)
6. If the clock location of the high spot remained at or near the clock location of the original high spot, the rim is the major contributor to the runout problem.
   - Confirm by removing the tire from the wheel and check the wheel rim runout.
   - If the wheel rim runout exceeds specifications, replace the wheel.
7. If the clock position of the high spot is 6 hours from the original high spot, the tire is the major contributor to the runout problem (figure 7).
   - Replace the tire.

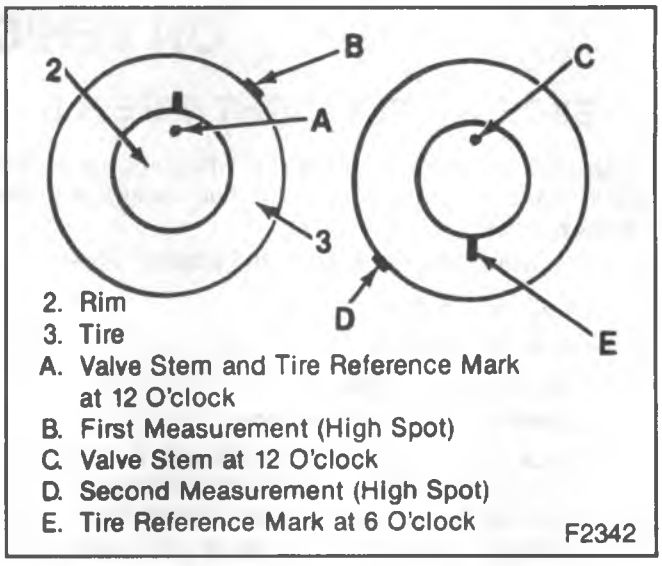

Figure 7—Tire to Wheel Vectoring—Excessive Runout

8. After correcting the tire to the wheel vectoring, rebalance the wheel and tire assembly.

Tire and Wheel Assembly to Hub/Rotor Vectoring

1. Mark the wheel hub bolt nearest the valve stem for reference (figure 8).

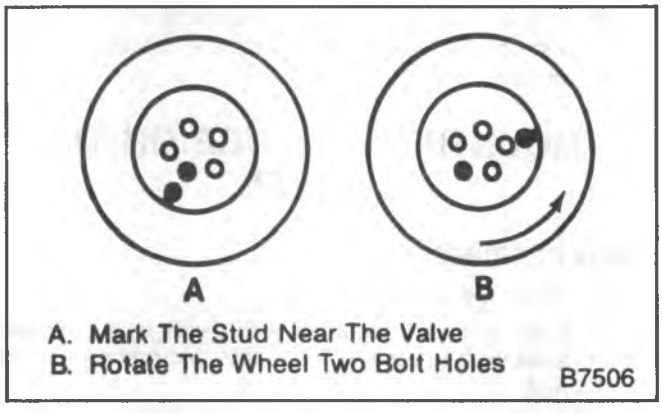

Figure 8—Tire and Wheel Assembly to Hub/Rotor Vectoring

2. Rotate the assembly two wheel hub bolts and recheck the runout (figure 8).
   - Several positions may have to be tried to locate the optimum location.
   - This can be effective for both radial and lateral runouts.
3. If there is some looseness in the wheel hub bolt holes, radial runout can be reduced by loosening the hub bolt nuts slightly, moving the wheel position on the bolts and then retightening the nuts.
4. Balance the tire and wheel to hub/rotor assembly.
   - Compensates for any imbalance in the brake rotor, drum or wheel cover.

ON-VEHICLE SERVICE

EXCESSIVELY TIGHT WHEELS

Use this procedure to remove the wheel and tire assembly if it does not break free of the hub using a standard removal procedure.

1. Tighten all the lug nuts on the affected wheel.
   - Do not torque.
2. Raise the vehicle.
3. Loosen each nut two turns.
4. Lower the vehicle to the floor.
5. Rock the vehicle from side to side to loosen the wheel. Or rock the vehicle from forward to reverse allowing the vehicle to move several feet in each direction. Apply quick, hard jabs on the brake pedal to loosen the wheel.
6. Raise the vehicle and remove the lug nuts and the wheel.

SEPARATING THE TIRE FROM THE WHEEL

NOTICE: Use a tire changing machine to dismount tires. Do not use hand tools or tire irons alone to remove the tire from the wheel. Damage to the tire beads or wheel rim could result.

- Follow the tire changing machine manufacturer's instructions to properly separate the tire from the wheel.

MOUNTING THE TIRE ON THE WHEEL

BIAS PLY TIRES

1. Clean the tire bead area.
2. Clean the rim bead seats with a wire brush or coarse steel wool to remove lubricants, old rubber, and light rust.
3. Apply an approved tire lubricant to the tire bead area.
4. Attach the tire to the wheel.
   - Use a tire changing machine. Follow the equipment manufacturer's instructions.

CAUTION: Do not stand over tire when inflating. The bead may break when it snaps over the safety hump, and cause serious personal injury. Do not exceed 275 kPa (40 psi) pressure when inflating. If 275 kPa (40 psi) pressure will not seat beads, deflate, re-lubricate and reinflate. Overinflation may cause the bead to break and result in personal injury.

5. Install a valve core and inflate to the specified pressure (figures 17 and 18).
   - The locating rings on each side of the tire must show above the rim flanges, positioned in direct relation to the wheel (not eccentric as compared with the rim).
6. Check the bead seating.
   - Tires must be mounted and inflated in accordance with the safety precautions included with the tire mounting equipment.

RADIAL PLY TIRES

NOTICE: Recommended vehicle tire mounting and inflation procedures are especially important with radial tires. Failure to follow these procedures can cause bead deformation in both tube type and tubeless tires due to incorrect bead seating. Bead deformation may lead to chafing, lower sidewall and bead area cracking, eccentric wear, ride vibration and non-retreadable casings.

Tube Type Tires

Important

- The use of tubes in tubeless tires is not a recommended repair due to the fact that speed ratings are drastically reduced which may affect handling characteristics and vehicle safety.

Important

- Only use rims approved for radial tire usage by the rim manufacturer.

1. Clean the rim parts.
   - Remove all rust and other foreign material.
   - Make sure the rim parts match and are not sprung or broken.
2. Lubricate the tire beads, the portion of the tube between the beads, and the flaps with an approved rubber lubricant.
   - Radial tubes are identifiable by the letter "R" in the size designation. A red band in the valve stem and an "R" in the flap size designation also identify radial parts.

NOTICE: Do not use silicone base lubricants — this could cause the tire to slip on the wheel.

3. Inflate to operating pressure, deflate completely, and reinflate to operating pressure.
   - Allows the tube, flap, and tire to fit together properly.
4. Check bead seating.
   - Visually check the slot and side ring gap (on two-piece rims) to make sure the bead is seated.
5. Check the spcaing between the rim flange and one of the three lower sidewall rim line rings while the tire is laying flat to verify bead seating.
   - Measurements must be taken each 90 degrees around the circumference of the rim flange.
   - If the spacing is uneven around the bead from side to side, repeat steps 1 through 3, then recheck.

Installing Synthetic Tubes

NOTICE: When the tube and flap are not properly lubricated, and mounted, they will stretch thin in the tire bead and rim region. This will cause premature wear.

1. Clean the inside of the tube casing.
2. Insert the tube in the tire and inflate until it is nearly rounded out.
3. Inspect the rim for rust scale and bent flanges.
   - Clean rust scale and straighten the flanges where necessary.
4. Apply a solution of neutral vegetable oil soap to the inside and outside of the tire beads, and also the rim side of the tube.
   - Use a brush or a cloth swab.
   - Do not allow the soap solution to run down into the tire.
5. Follow the standard procedure when mounting the tube and tire on a drop center rim. Be sure the tire is centered on the rim so the beads are out of the rim well before inflating. Do not allow the tire to hang loosely on the wheel while inflating.
6. Center the valve and pull it firmly against the rim. Hold in this position and inflate until the tire beads are firmly seated on the rim against the flanges.
7. Remove the valve core to completely deflate the tire.
8. Reinflate the tire to the recommended pressure.
   - Refer to "Tire Load Limits and Inflation Pressure" at the end of this section.

Tubeless Tires

NOTICE: The use of tubes in tubeless tires is not a recommended repair due to the fact that speed ratings are greatly reduced.

Important

- Only use rims approved for radial tire usage by the rim manufacturer.

1. Clean the rim.
   - Remove all rust and foreign material.
2. Lubricate tire beads and rim bead seats with an approved rubber lubricant.

NOTICE: Do not use silicone base lubricants — this could cause the tire to slip on the wheel.

3. Inflate the tire to operating pressure.
   - Due to the construction of radial truck tires, particularly in the lower sidewall and bead area, it may be difficult to get the tire to take air.
   - An inflation aid may be necessary to help seat the bead of tubeless radial tires. Two types of inflation aids are commercially available — metal rings which use compressed air to seat beads, and rubber rings which seal between the tire bead and rim bead seat allowing the bead to move out and seat. Lubrication is necessary with both aids.
4. Check the spacing between the rim flange and one of the three lower sidewall rim line rings while the tire is laying flat to verify bead seating.
   - Measurements must be taken each 90 degrees around the circumference of the rim flange.
   - If the spacing is uneven around the bead from side to side, repeat steps 1 through 3, then recheck.

Important

- This procedure must be followed to insure proper bead seating in order to prevent bead deformation.
  - Radial tires, as well as bias tires, must be mounted and inflated in accordance with safety precautions noted in RMA Radial and Bias Truck Tire Service Manuals.

INSTALLING THE WHEEL AND TIRE ASSEMBLY

CAUTION: Before reinstalling the wheels, remove any build up of corrosion on the wheel mounting surface and brake drum or disc mounting surface by scraping and wire brushing. Installing wheels with poor metal-to-metal contact at the mounting surfaces can cause wheel nuts to loosen. This can lead to a wheel coming off while the vehicle is moving, possibly causing loss of control.

SINGLE WHEELS

Install or Connect (Figure 9)

1. Wheel and tire assembly in position on the hub/rotor, with lug nuts loosely installed.
2. Turn the wheel until one nut is at the top of the bolt circle. Tighten the nut just snug.
3. Snug up the remaining nuts criss-cross to minimize runout.

NOTICE: See "Notice" on page 3E-1 of this section.

Tighten

- Nuts to "Specifications" at the end of this section.
- Tighten evenly and alternately to avoid excessive runout (figure 9)

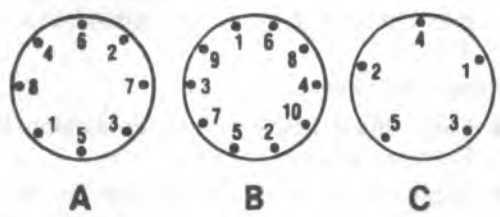

A. 8 Stud Wheel
B. 10 Stud Wheel
C. 5 Stud Wheel

B7536

Figure 9—Wheel Tightening Sequence

DUAL WHEELS

Install or Connect (Figure 9)

1. Inner and outer wheel and clamp ring on the rear wheel, or wheel and clamp ring on the front wheel.
   - Be sure the pins on the clamp ring face outward.

NOTICE: See "Notice" on page 3E-1 of this section.

2. Lug nuts finger tight.

Tighten

- Nuts to "Specifications" at the end of this section.
- For P30 models, tighten to 210 N•m (155 ft. lbs.). Then tighten again to 240 N•m (177 ft. lbs.).
- Tighten evenly and alternately to avoid excessive runout (figure 9).

Measure

- Lateral runout should not exceed 3.18 mm (0.125 inches) on the front wheel or 4.6 mm (0.187 inches) on the rear wheel.

ALUMINUM WHEEL REFINISHING

- Remove the tire and wheel assembly from the vehicle.
- Mark the position of the wheel weights on the tire for correct reinstallation after recoating the wheel. Remove the wheel weights and mask off the tire.

1. Remove the original clear coating.
   - Apply a chemical stripper such as 3M brand Troubleshooter (or equivalent) to the wheel rim surface.
   - Wait 10 to 15 minutes, then wet scrub the surface using a 3M #98 Scotchbrite Cleaning Pad (3M part number 07445) (or equivalent).
   - Rinse the surface thoroughly with clean water.

CAUTION: Use of eye goggles is necessary to prevent personal injury.

2. Remove surface oxidation.
   - Use 3M Superbuff Buffing Pad (3M part number 05701) (or equivalent) and a medium type compound such as 3M part number 05955 or 05931.
   - Hose off the rim with water and scrub with a small brush to remove excess compound, then air blow dry.
3. Recoat the wheels.
   - Clean the surface of any contaminants using Prekleno (or equivalent).
   - Apply #801 Metal Conditioner (or equivalent) taking care to use rubber gloves and a clean cloth during the applications. Keep the surface wet while applying.

Important

- Make sure #801 Metal Conditioner (or equivalent) is reduced one part metal conditioner to three parts of water.
- Wipe off #801 Metal Conditioner (or equivalent) carefully while the surface is still wet. Use a clean, dry cloth.

4. Apply the clear coat.
   - Apply R & M's 893 2K Clear (or equivalent) with 894 Urethane Catalyst Hardener (or equivalent). Refer to the label for specific directions.
   - Wear proper respiratory protection such as a 3M Paint Respirator (part number 06894) or Easi-Air Respirator (part number 06986) (or equivalent).
5. Allow the wheel to air dry overnight (minimum) before installing on the vehicle.
6. Attach balance weights and install the wheel and tire assembly on the vehicle.
   - Mount the weights in the marked positions and remove the masking from the tire.

ALUMINUM WHEEL POROSITY REPAIR

1. Remove the tire and wheel assembly.
2. Locate leaking areas by inflating tire to 345 kPa (50 psi) and dipping the tire and wheel assembly into a water bath.
3. Mark leak areas and remove the tire from the wheel.
4. Scuff the inside surface at leak area with 80 grit sandpaper and clean the area with general purpose cleaner such as 3M #08984 or equivalent.
5. Apply 3 mm (1/8-inch) thick layer of adhesive/sealant PN 1052366 or equivalent to the leak area and allow twelve hours of drying time.
6. Mount the tire on the wheel, pressurize to 345 kPa (50 psi) and check for leaks.

CAUTION: To avoid serious personal injury, do not stand over tire when inflating. The bead may break when the bead snaps over the safety hump. Do not exceed 275 kPa (40 psi) pressure when inflating any tire if beads are not seated. If 275 kPa (40 psi) pressure will not seat the beads, deflate, relubricate the beads and reinflate. Overinflation may cause the bead to break and cause serious personal injury.

7. Adjust tire pressure to meet specifications.
8. Balance the tire and wheel assembly.
9. Install the tire and wheel assembly.

WHEEL AND TIRE BALANCING

There are two types of tire and wheel balancing; static and dynamic. Static balance is the equal distribution of weight around the wheel. Assemblies that are statically unbalanced cause a bouncing action called wheel tramp. This condition will eventually cause uneven tire wear.

Dynamic balance is the equal distribution of weight on each side of the centerline so that when the assembly spins there is no tendency for it to move from side to side. Assemblies that are dynamically unbalanced may cause wheel shimmy.

To ensure successful, accurate balancing, the following precautions must be observed:

- The wheel and tire must be clean and free of all foreign matter.
- The tire should be in good condition and properly mounted using the balance mark on the tire, if any, or lined up with the inflation valve.
- Bent wheels that have a runout of over 1.6 mm (1/16-inch) should be replaced.
- Inspect the wheel and tire assembly to determine if an out-of-round condition exists.

Important

- A severe out-of-round condition cannot be "balanced out." A wheel and tire assembly having an out-of-round condition exceeding 4.7 mm (3/16-inch) is not suitable for the front of the vehicle. Its use on the rear of the vehicle must be governed by its general condition and whether the roundness problem seriously detracts from overall ride quality.
- Follow the wheel balancer machine instructions while performing the balancing operation.

NOTICE: When balancing aluminum wheels, use only special type aluminum wheel weights which are coated to prevent wheel corrosion and are shaped to fit only aluminum wheels.

TIRE ROTATION

To equalize wear, rotate tire and wheel assemblies every 7,500 miles (figure 10). In addition to scheduled rotation, the tire and wheel assemblies should also be rotated whenever uneven tire wear is noticed.

Due to their design, radial tires tend to wear faster in the shoulder area particularly in front positions. Radial tires in non-drive locations may develop an irregular wear pattern that can increase tire noise if not rotated. This makes regular rotation especially necessary.

After rotation, be sure to check wheel nuts for specified torque.

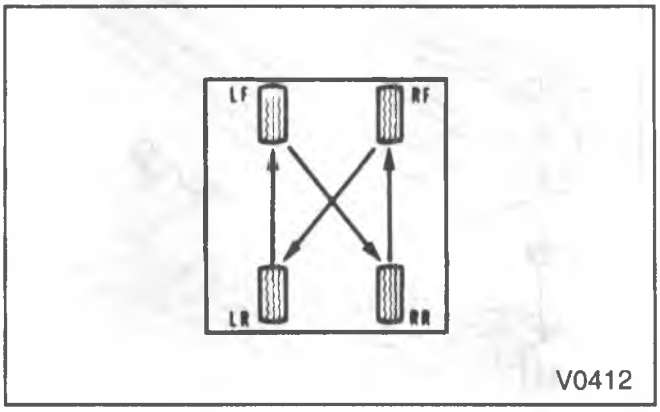

Figure 10—Tire Rotation

SPARE TIRE CARRIERS

Removal of the spare tire carrier is accomplished by removing the various fasteners shown in the appropriate figure. Replacement is the reverse of the removal procedure.

UNDERBODY SWING OUT SPARE TIRE CARRIER-R/V

The underbody swing out spare tire carrier is standard equipment on R/V 1 series models. It is available as an option (RPO P10) on R/V 2 and 3 series models (figure 12).

UNDERBODY GLIDE OUT SPARE TIRE CARRIER-R/V

The underbody glide out spare tire carrier is available as an option on R/V 209 (43) and 300 series pickups (figure 11).

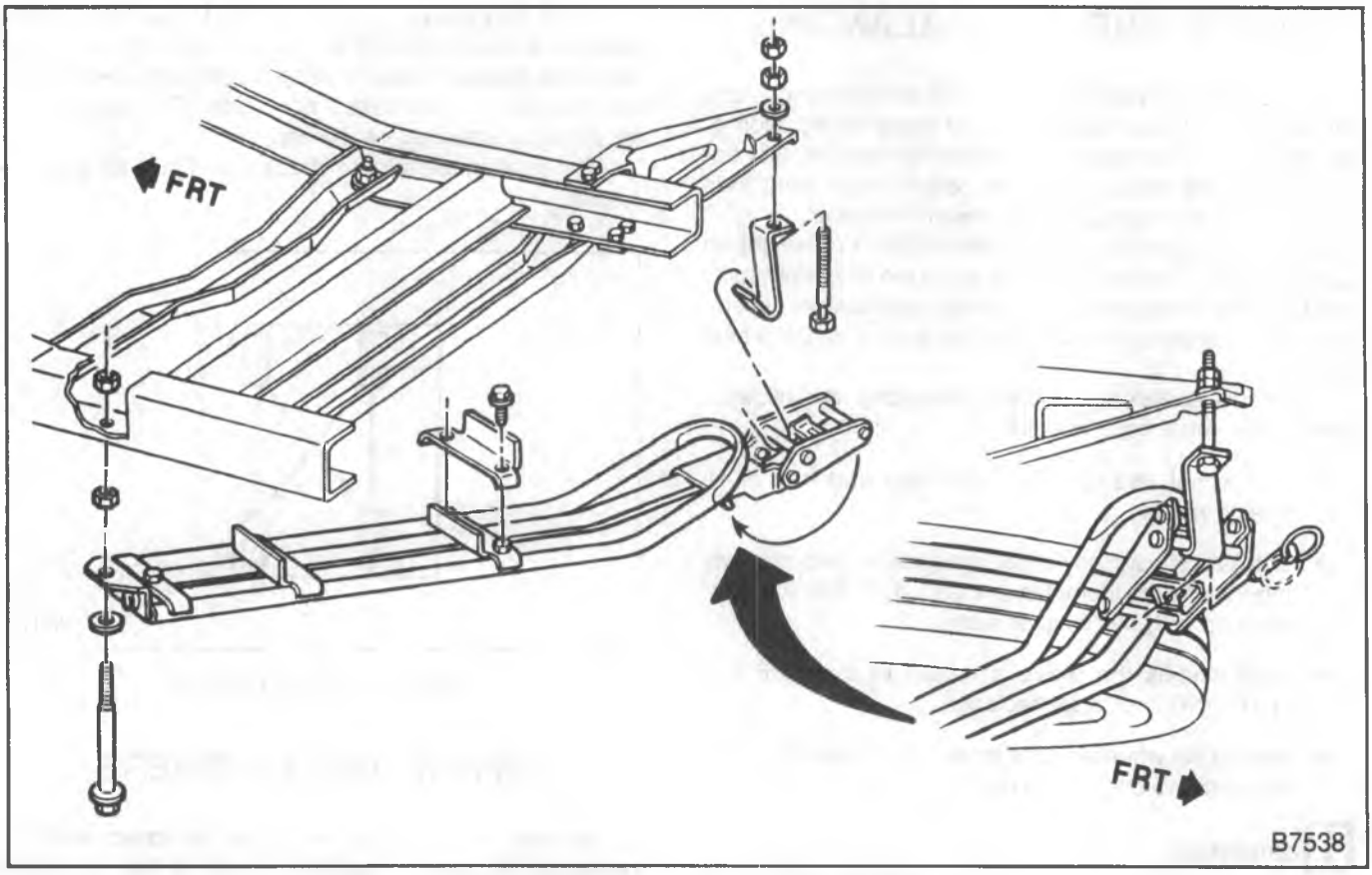

Figure 11—Underbody Glide Out Spare Tire Carrier-R2 and R/V 3

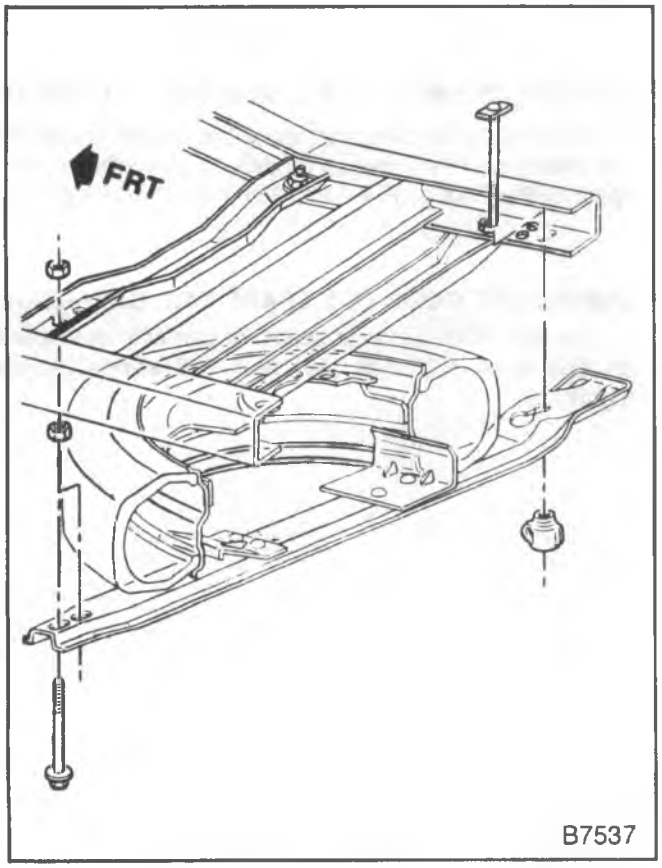

Figure 12—Underbody Swing Out Spare Tire Carrier-R/V 1, 2 and 3

SIDE PANEL MOUNTED SPARE TIRE CARRIER-R209 (43) and R/V 309

The side panel mounted spare tire carrier is available as an option on R/V 309 series pickups (figure 13).

SUBURBAN AND UTILITY VEHICLE SPARE TIRE CARRIERS

The spare tire carrier for Suburban models is shown in figure 14. The carrier for Utility vehicles is shown in figure 15.

P-MODEL SPARE TIRE MOUNTING

Mounting of the spare tire for the P-Models is shown in figure 16.

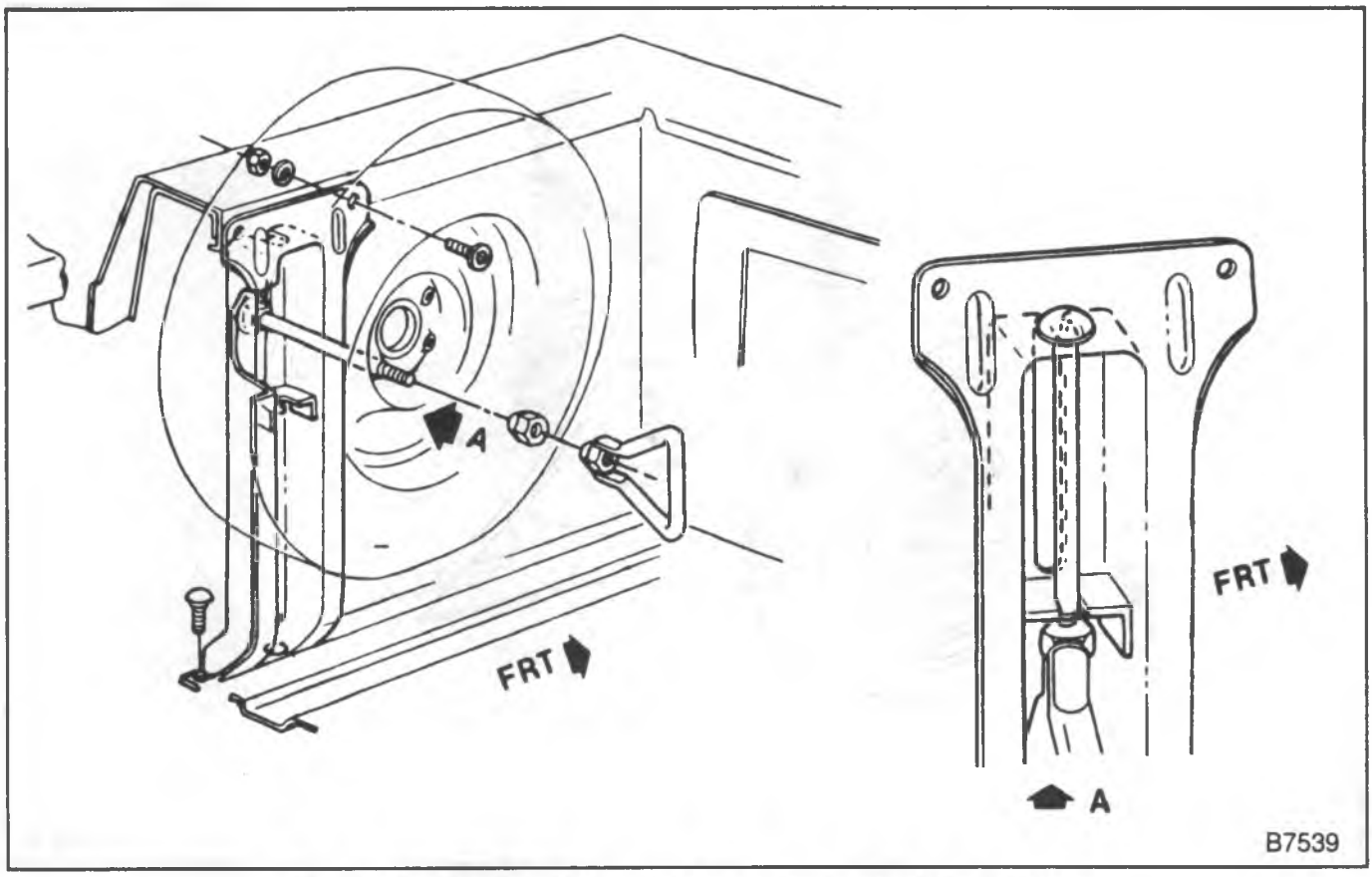

Figure 13—Side Panel Mounted Spare Tire Carrier-R2 and R/V 3

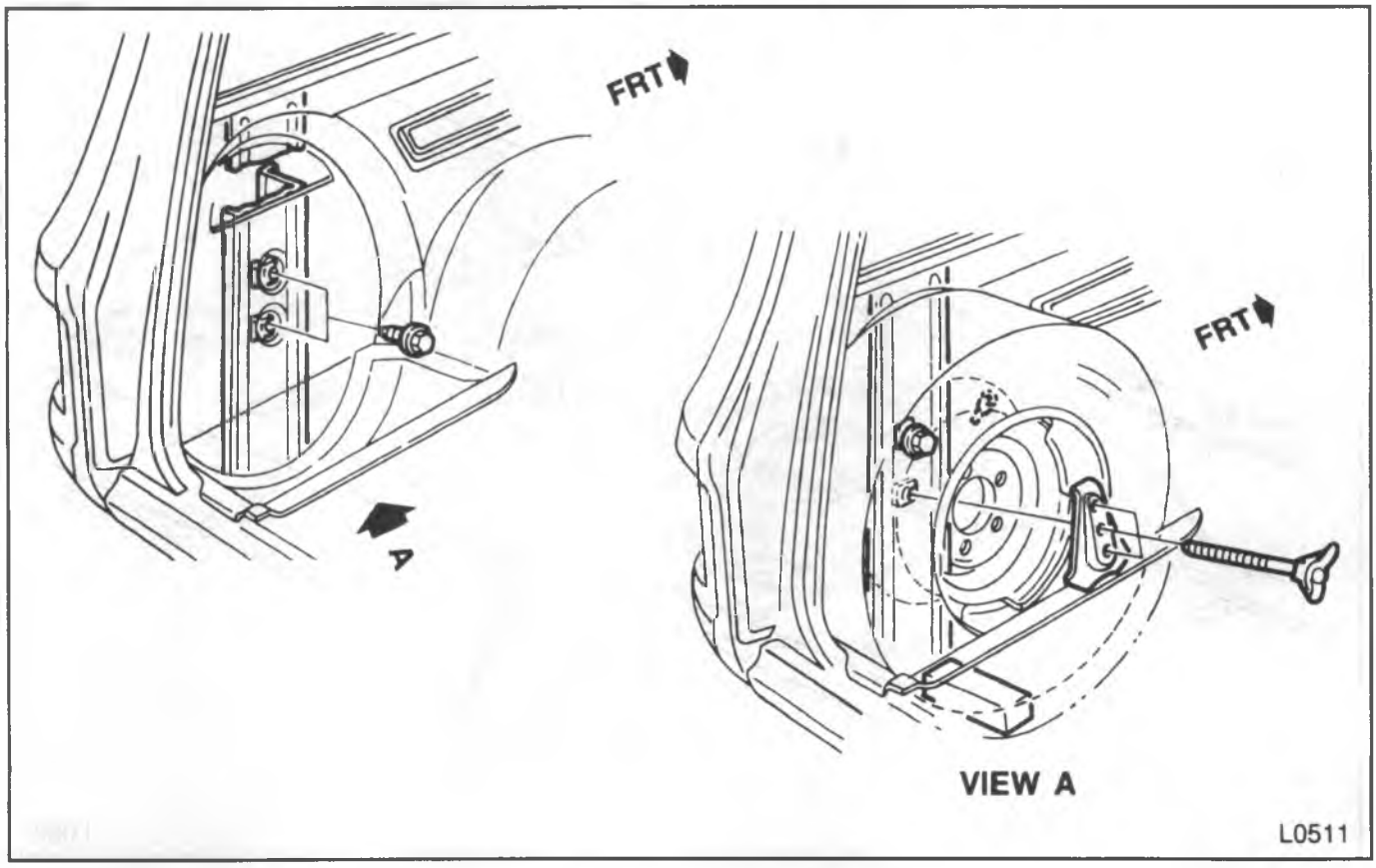

Figure 14—Spare Tire Carrier—Suburban

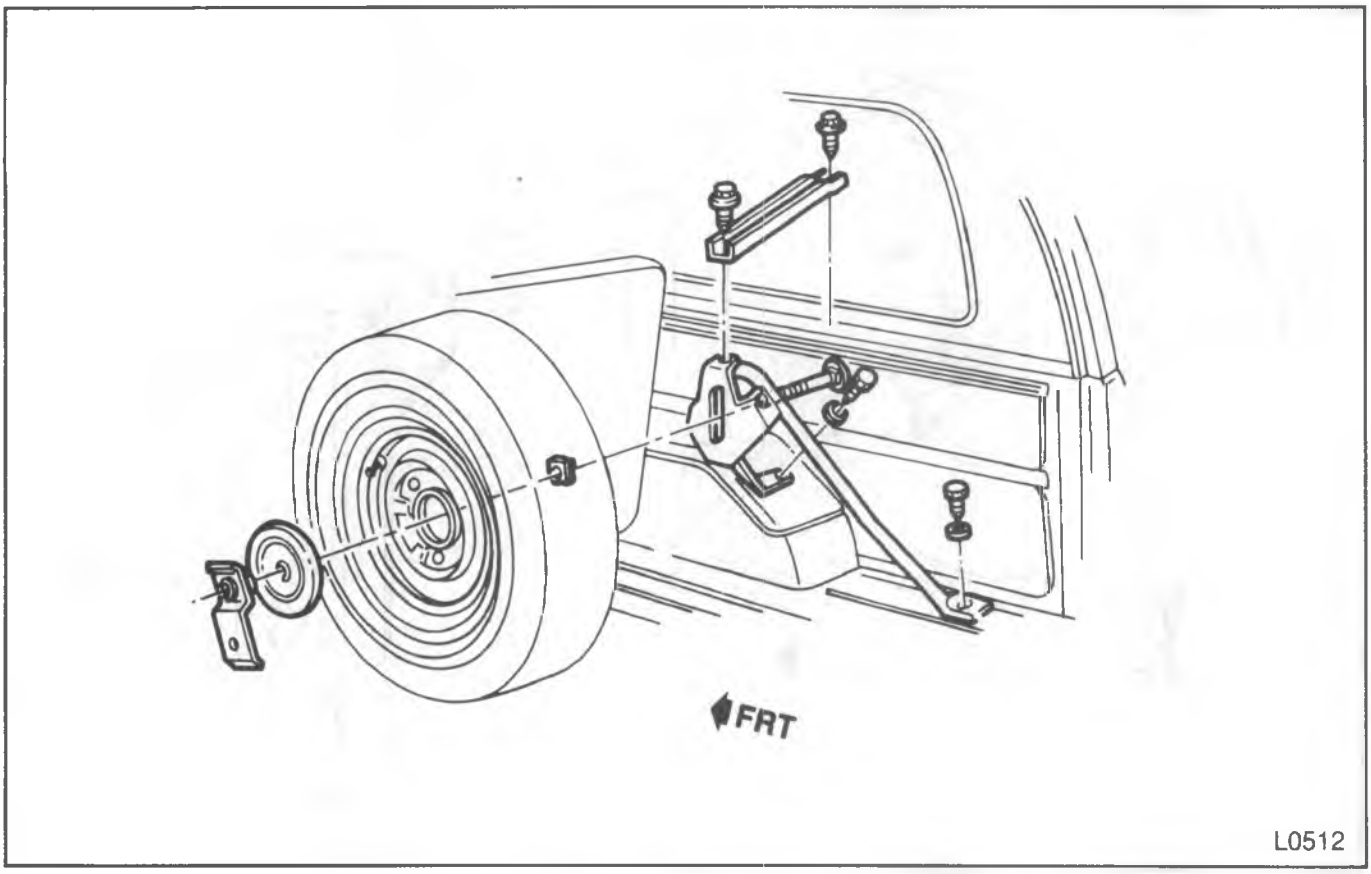

Figure 15—Spare Tire Carrier - 2 Door, Four Wheel Drive Utility Vehicles

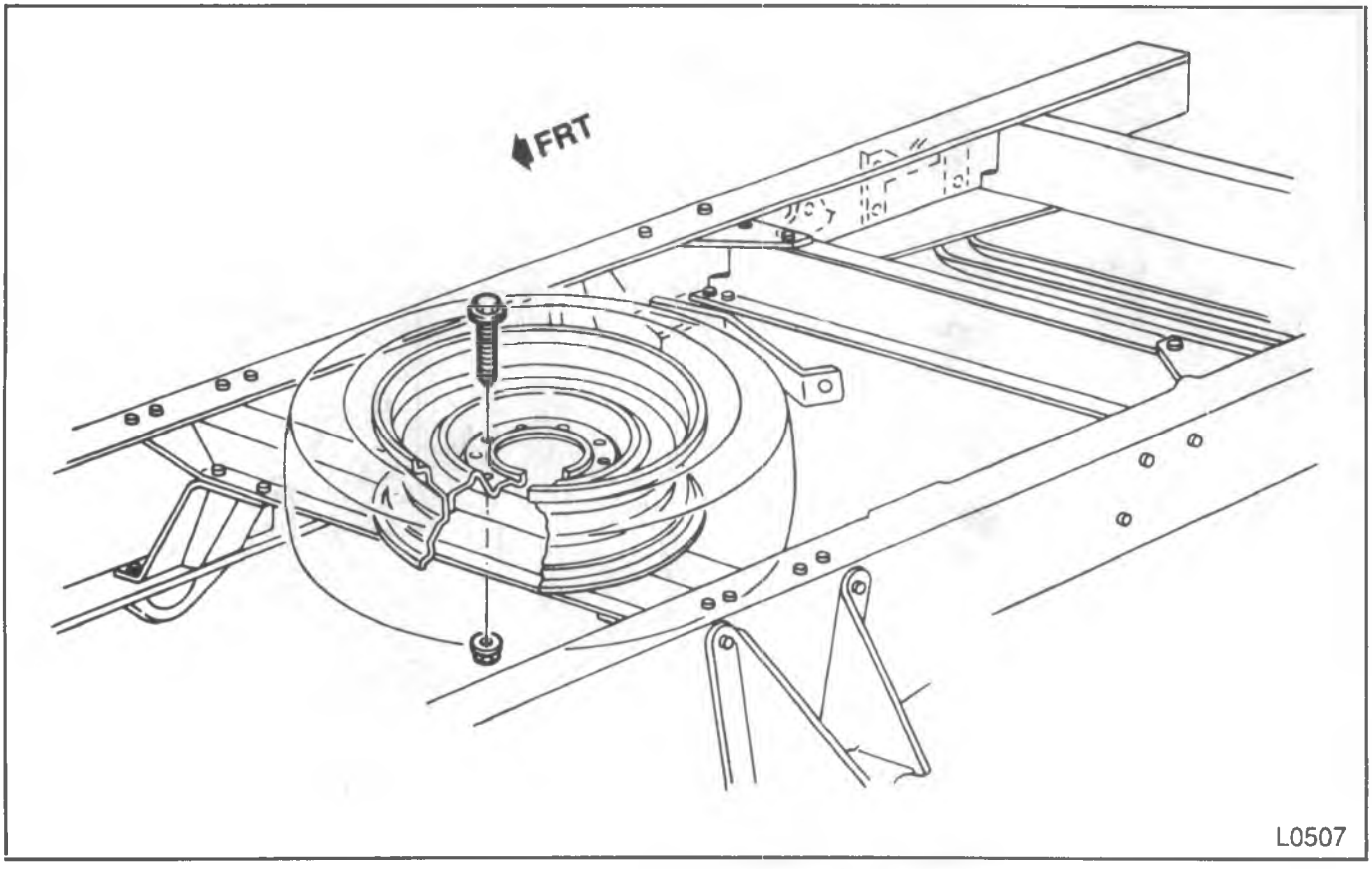

Figure 16—Spare Tire Mounting - P Models

SPECIFICATIONS

TIRE LOAD LIMITS AND INFLATION PRESSURE

Refer to figure 17 for tire load limits given an inflation pressure range.

WHEEL CODES AND LOAD LIMITS

Refer to figure 18 for wheel identification codes and location. Refer to MAINTENANCE AND LUBRICATION (SEC. 0B) for specifications.

WHEEL STUD NUT TORQUE (SINGLE FRONT AND REAR WHEELS)

Series	Number of Studs	Nut Torque
R10/1500	5 studs	140 N·m (100 ft. lbs.) (steel wheels)
V10/1500	6 studs	120 N·m (88 ft. lbs.) (steel wheels)
R10/1500	5 studs	140 N·m (100 ft. lbs.) (aluminum wheels)
V10/1500	6 studs	140 N·m (100 ft. lbs.) (aluminum wheels)
RV20/2500	8 studs	160 N·m (120 ft. lbs.) (all)
RV30/3500	8 studs	160 N·m (120 ft. lbs.) (all)
P	8 studs	160 N·m (120 ft. lbs.) (all)

WHEEL STUD NUT TORQUE (SINGLE FRONT AND DUAL REAR WHEELS)

Series	Number of Studs	Nut Torque
RV30/3500	8 studs	190 N·m (140 ft. lbs.) (all)
P	8 studs	190 N·m (140 ft. lbs.) (with RPO JB8)
P	10 studs (Tighten in two steps)	Initial: 190 N·m (140 ft. lbs.) (with RPO JF9) Final: 240 N·m (175 ft. lbs.) (with RPO JF9)

TB-3030-2A

TIRE LOAD LIMIT CHARTS

(Tire load limits at different inflation pressures are shown below. Vehicle loading must be limited such that neither the tire inflation pressures or load limits are exceeded).

METRIC RADIAL TIRES -- kg (LBS.)

Tire Size		Standard Load			Extra Load	
	KPI (PSI)	200 (29)	220 (32)	240 (35)	280 (41)	Load Index
P250/75R15	Kg/(LBS)	605 (1335)		659 (1453)		
P215/75R15	Kg/(LBS)	654 (1442)		718 (1583)		102
P225/75R15	Kg/(LBS)			772 (1703)		105
P235/75R15	Kg/(LBS)		799 (1763)	835 (1843)	900 (1984)	108

Tire Size	Load Range	Single Dual	Inflation Pressure — kPa (PSI)						
			250 (36)	300 (44)	350 (51)	400 (58)	450 (65)	500 (73)	550 (80)
LT215/85R16	C	S	695 (1532)	790 (1742)	880 (1940)				
		D	630 (1389)	720 (187)	800 (1764)				
LT215/85R16	D	S	630 (1389)	790 (1742)	880 (1940)	965 (2127)	1050 (2315)		
		D	720 (1587)	720 (1587)	800 (1764)	870 (1918)	955 (2105)		
LT235/85R16	D	S	790 (1742)	900 (1984)	1000 (2205)	1100 (2425)	1190 (2623)		
		—							
LT235/85R16	E	S	790 (1742)	900 (1984)	1000 (2205)	1100 (2425)	1190 (2623)	1290 (2844)	1380 (3042)
		—							

STANDARD RADIAL TIRES — kg (LBS.)

Tire Size	Load Range	Single Dual	Inflation Pressure — kPa (PSI)							
			310 (45)	345 (50)	379 (55)	414 (60)	448 (65)	483 (70)	517 (75)	552 (80)
8R19.5	D	S				1030 (2270)	1093 (2410)	1152 (2540)	1216 (2680)	1270 (2800)
		D				1012 (2230)	1066 (2350)	1116 (2460)		

BIAS TIRES — kg (LBS.)

Tire Size	Load Range	Single Dual	Inflation Pressure — kPa (PSI)									
			307 (30)	241 (35)	276 (40)	310 (45)	345 (50)	379 (55)	414 (60)	448 (65)	483 (79)	517 (75)
7.50-16	C	S	735 (1630)	803 (1770)	875 (1930)	934 (2060)						
		D	649 (1430)	710 (1565)	767 (1690)	823 (1815)						
7.50-16	D	S	735 (1620)	803 (1770)	875 (1930)	934 (2060)	993 (2190)	1048 (2310)	1107 (2440)			
		D	649 (1430)	710 (1565)	767 (1690)	823 (1815)	875 (1930)	925 (2040)	971 (2140)			
7.50-16	E	S	735 (1620)	803 (1770)	875 (1930)	934 (2060)	993 (2190)	1048 (2310)	1107 (2440)	1161 (2560)	1211 (2670)	1261 (2780)
		—										
8-19.5	D	S					957 (2110)	1030 (2270)	1093 (2410)	1152 (2540)	1216 (2680)	1270 (2800)
		D			839 (1850)	903 (1990)	957 (2110)	1012 (2230)	1066 (2350)	1116 (2460)		
8-19.5	E	S					957 (2110)	1030 (2270)	1093 (2410)	1152 (2540)	1216 (2680)	127 (2800)
		D			839 (1850)	903 (1990)	957 (2110)	1012 (2230)	1066 (2350)	1116 (2460)	1166 (2570)	1216 (2680)

GMTB-3176-2A

Figure 17—Tire Load Limits and Inflation Pressure

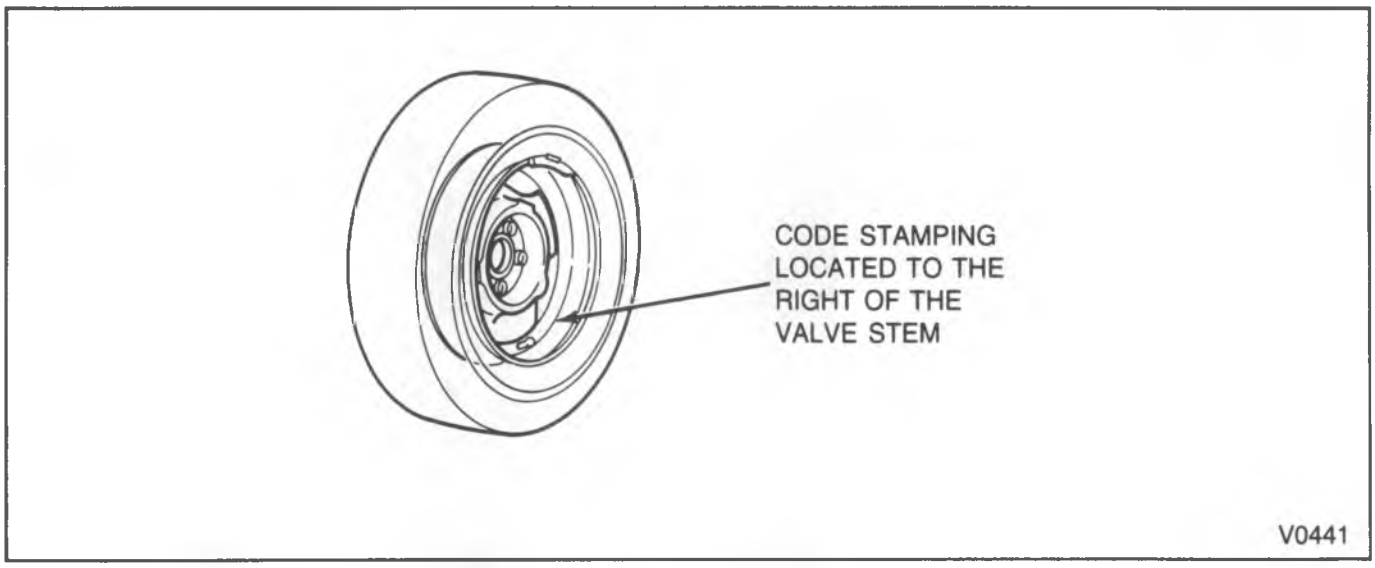

Figure 18—Wheel Code Identification and Location

SECTION 3F1

STEERING COLUMN – STANDARD

NOTICE: When fasteners are removed, always reinstall them at the same location from which they were removed. If a fastener needs to be replaced, use the correct part number fastener for that application. If the correct part number fastener is not available, a fastener of equal size and strength (or stronger) may be used. Fasteners that are not reused, and those requiring thread locking compound will be called out. The correct torque value must be used when installing fasteners that require it. If the above conditions are not followed, parts or system damage could result.

CONTENTS

SUBJECT	PAGE
Description	3F1- 1
Diagnosis	3F1- 2
On-Vehicle Service	3F1- 8
Inspection	3F1- 8
Steering Wheel Replacement	3F1- 9
Intermediate Shaft Replacement	3F1-10
Flexible Coupling Replacement	3F1-10
Pot Coupling Replacement	3F1-10
Steering Column Replacement	3F1-11
Turn Signal Switch Replacement	3F1-13
Lock Cylinder Replacement	3F1-14
Tone Alarm Switch Replacement	3F1-15
Ignition Switch Replacement	3F1-15
Unit Repair	3F1-19
Lower Bearing Adjustment	3F1-21
Specifications	3F1-22
Special Tools	3F1-22

DESCRIPTION

The locking energy-absorbing steering column includes three important features in addition to the steering function:

1. The column is energy-absorbing, designed to compress in a front-end collision to minimize the possibility of injury to the driver of the vehicle.
2. The ignition switch and lock are mounted on the column.
3. With the column mounted lock, the ignition, steering and gearshifting operation can be locked to inhibit theft of the vehicle.

The column may be disassembled and reassembled. To ensure the energy-absorbing action, it is important that the specified screws, bolts and nuts be used only as designated and that they are tightened to the specified torque.

When the column is removed from the vehicle, such actions as a sharp blow on the end of the steering shaft or shift lever, leaning on the column assembly, or dropping the assembly could shear or loosen the plastic fasteners that maintain column rigidity.

DIAGNOSIS

PROBLEM	POSSIBLE CAUSE	CORRECTION
Lock System Will Not Unlock	1. Lock bolt damaged. 2. Faulty lock cylinder. 3. Damaged housing. 4. Damaged or collapsed sector. 5. Damaged rack.	1. Replace the lock bolt. 2. Replace or repair the lock cylinder. 3. Replace the housing. 4. Replace the sector. 5. Replace the rack.
Lock System Will Not Lock	1. Lock bolt spring is broken. 2. Damaged sector tooth. 3. Faulty lock cylinder. 4. Damaged housing. 5. Damaged rack. 6. Interference between the bowl and coupling. 7. Ignition switch stuck. 8. Actuator rod restricted or bent. 9. Transmission linkage adjustment is incorrect.	1. Replace the spring. 2. Replace the sector tooth. 3. Replace the lock cylinder. 4. Replace the housing. 5. Replace the rack. 6. Adjust or replace. 7. Adjust or replace. 8. Adjust or replace. 9. Adjust.
Lock System—High Lock Effort	1. Lock cylinder is faulty. 2. Ignition switch is faulty. 3. Rack preload spring is broken or weak. 4. Burrs on the sector, rack, housing, support, tang of the shift gate or actuator rod coupling. 5. Bent sector shaft. 6. Distorted rack. 7. Bent or restricted actuator rod. 8. Ignition switch mounting bracket is bent.	1. Replace the lock cylinder. 2. Replace the ignition switch. 3. Replace the spring. 4. Remove the burrs. 5. Replace the shaft. 6. Replace the rack. 7. Straighten or replace the rod. 8. Straighten or replace the bracket.
Lock Cylinder—High Effort Between The "Off" and "Off-Lock" Positions	1. Burr on tang of shift gate. 2. Distorted rack.	1. Remove the burr. 2. Replace the rack.
Sticks In "Start" Position	1. Actuator rod is deformed. 2. Any high effort condition.	1. Straighten or replace the rod. 2. See "correction" under the high effort diagnosis.
Key Cannot Be Removed In The "Off-Lock" Position	1. Ignition switch is not set correctly. 2. Faulty lock cylinder.	1. Adjust ignition switch. 2. Replace the lock cylinder.
The Lock Cylinder Can Be Removed Without Depressing The Retainer	1. Faulty retainer. 2. Burr over the retainer slot in the housing cover.	1. Replace the lock cylinder. 2. Remove the burr.
Lock Bolt Hits The Shaft Lock In The "Off" And "Park" Positions	Ignition switch is not set correctly.	Adjust the ignition switch.

GMTB-4020-A

DIAGNOSIS (CONT.)

PROBLEM	POSSIBLE CAUSE	CORRECTION
Noise In The Column	1. Flexible coupling pulled apart. 2. Column not correctly aligned. 3. One click in Off-Unlock position and when the steering wheel is moved. 4. Horn contact ring not lubricated. 5. Lack of grease on the bearings or bearing surface. 6. Lower shaft bearing is tight or frozen. 7. Upper shaft bearing is tight or frozen. 8. Lock plate retaining ring is not seated. 9. Steering shaft snap ring is not seated. 10. Shroud or housing is loose. 11. Sheared intermediate shaft plastic joint.	1. Align the column and replace the flexible coupling. 2. Align the column. 3. Normal seating of the lock bolt. 4. Lubricate. 5. Lubricate the bearings. 6. Replace the bearing. Inspect the shaft and replace if scored. 7. Replace the housing assembly. 8. Replace the retaining ring. Inspect for proper seating in the groove. 9. Replace the snap ring. Inspect for proper seating in the groove. 10. Tighten mounting screws. 11. Repair or replace the steering shaft. Align the column.
High Steering Shaft Effort	1. Column assembly is misaligned in the vehicle. 2. Tight or frozen upper or lower bearings. 3. Binding intermediate shaft cardon type joint.	1. Align correctly. 2. Replace the bearings. 3. Repair or replace the intermediate shaft.
High Shift Effort	1. Column assembly is misaligned in the vehicle. 2. Lower bowl bearing is not aligned correctly. 3. Lack of grease on the bearing or seal areas. 4. Shift tube is bent or broken.	1. Align correctly. 2. Align correctly. 3. Lubricate bearings and seals. 4. Replace the shift tubes.
Improper Transmission Shifter	1. Sheared shift tube joint. 2. Improper transmission linkage adjustment. 3. Loose lower shift lever. 4. Sheared lower shift lever weld.	1. Replace the shift tube assembly. 2. Adjust the linkage. 3. Replace the shift tube assembly. 4. Replace the shift tube assembly.
Lash In Mounted Column Assembly	1. Column mounting bracket bolts loose. 2. Broken weld nuts on the jacket. 3. Column bracket capsule sheared.	1. Tighten to specifications. 2. Replace the jacket assembly. 3. Replace the bracket assembly.
Dimmer Switch Will Not Function	1. Loose connector at the dimmer switch. 2. Improper adjustment. 3. Internally damaged or worn switch.	1. Tighten or replace. 2. Readjust. 3. Replace.
Turn Signal Will Not Cancel	1. Loose switch mounting screws. 2. Switch or anchor bosses broken. 3. Broken, missing or out of position detent, return or cancelling spring. 4. Uneven or incorrect cancelling cam to cancelling spring interference.	1. Tighten screws to 2.8 N.m (25 in. lbs.). 2. Replace the switch. 3. Reposition or replace the springs as required. 4. Adjust the switch position. • If the interference is correct and switch will still not cancel, replace the switch. • If the interference cannot be corrected by the switch adjustment, replace the cancelling cam.

DIAGNOSIS (CONT.)

PROBLEM	POSSIBLE CAUSE	CORRECTION
Turn Signal Difficult To Operate	1. Actuator rod loose. 2. Yoke broken or distorted. 3. Loose or misplaced springs. 4. Foreign parts and/or materials. 5. Switch mounted loosely.	1. Tighten mounting screw to 1.4 N.m (12 in. lbs.). 2. Replace the switch. 3. Reposition or replace the springs. 4. Remove the foreign parts and/or material. 5. Tighten mounting screws to 2.8 (25 in. lbs.).
Turn Signal Will Not Indicate Lane Change	1. Broken lane change pressure pad or spring hanger. 2. Broken, missing or misplaced lane change spring. 3. Jammed base or wires.	1. Replace the switch. 2. Replace or reposition as required. 3. Loosen mounting screws, reposition base or wires and tighten the screws to 2.8 N.m (25 in. lbs.).
Turn Signal Will Not Stay In Turn Position	1. Foreign material or loose parts impending movement of the yoke. 2. Broken or missing detent or cancelling springs. 3. None of the above.	1. Remove material and/or parts. 2. Replace the spring. 3. Replace the switch.
Hazard Switch Cannot Be Turned Off	Foreign material between hazard support cancelling leg and yoke.	Remove the foreign material. • No foreign material. Replace the turn signal switch.
Hazard Switch Will Not Stay On Or Difficult To Turn Off	1. Loose switch, mounting screws. 2. Interference with other components. 3. Foreign material. 4. None of the above.	1. Tighten mounting screws to 2.8 N.m (25 in. lbs.). 2. Remove the interference. 3. Remove the foreign material. 4. Replace the switch.
No Turn Signal Lights	1. Faulty or blown fuse. 2. Inoperative turn signal flasher. 3. Loose chassis to column connector. 4. Disconnect column to chassis connector. Connect new switch to chassis and operate switch by hand. If vehicle lights now operate normally, signal switch is inoperative. 5. If vehicle lights do not operate, check chassis wiring for opens, grounds, etc.	1. Replace fuse and check operation. 2. Replace the turn signal flasher. 3. Connect securely, check operation. 4. Replace the signal switch. 5. Repair the chassis wiring.
Turn Indicator Lights On, But Not Flashing	1. Inoperative turn flasher. 2. Loose chassis to column connection. 3. Inoperative turn signal switch. 4. To determine if turn signal switch is faulty, substitute a new switch into the circuit and operate the switch by hand. If the vehicle's lights operate normally, the signal switch is inoperative. 5. If the vehicle's lights do not operate, check light sockets for high resistance connections, the chassis wiring for opens, grounds, etc.	1. Replace the turn flasher. 2. Connect securely and check operation. 3. Replace the turn signal switch. 4. Replace the signal switch. 5. Repair the chassis wiring.

GMTB-4022-A

DIAGNOSIS (CONT.)

PROBLEM	POSSIBLE CAUSE	CORRECTION
Front Or Rear Turn Signal Lights Are Not Flashing	1. Burned out fuse. 2. Burned out or damaged turn signal bulb. 3. High resistance connection to ground at the bulb socket. 4. Loose chassis to column connector. 5. Disconnect column to the chassis connector. Connect a new switch into the system and operate the switch by hand. If turn signal lights are now on and flash, the turn signal switch is inoperative. 6. If vehicle lights do not operate, check the chassis wiring harness to light sockets for opens, grounds, etc.	1. Replace fuse and check operation. 2. Replace the bulb. 3. Remove or repair the faulty connection and check operation. 4. Connect securely and check operation. 5. Replace the turn signal switch. 6. Repair the chassis wiring.
Stop Light Not On When Turn Indicated	1. Burned out fuse. 2. Loose column to chassis connection. 3. Disconnect column to chassis connector. Connect new switch into system without removing old. Operate switch by hand. if brake lights work with switch in the turn position, signal switch is faulty. 4. If brake lights do not work, check connector to stop light, the sockets for grounds, opens, etc.	1. Replace fuse and check operation. 2. Connect securely and check operation. 3. Replace the signal switch. 4. Repair connector to stop lights circuits.
Turn Indicator Panel Lights Not Flashing	1. Burned out bulbs. 2. High resistance to ground at the bulb socket. 3. Opens, grounds in wiring harness from the front turn signal bulb socket to the indicator lights.	1. Replace the bulbs. 2. Replace the socket. 3. Locate and repair as required.
Turn Signal Lights Flash Very Slowly	1. Inoperative turn signal flasher. 2. System charging voltage low. 3. High resistance ground at light sockets. 4. Loose chassis to column connection. 5. Disconnect column to chassis connector. Connect new switch into system without removing old. Operate switch by hand. If flashing occurs at normal rate, the signal switch is faulty. 6. If the flashing rate is still extremely slow, check chassis wiring harness from the connector to the light sockets for high resistance.	1. Replace the turn signal flasher. 2. Increase voltage to specifications. Refer to (SEC. 6D ENGINE ELECTRICAL) in this manual. 3. Repair high resistance grounds at the light sockets. 4. Connect securely and check operation. 5. Replace signal switch. 6. Locate and repair as required. Refer to SEC. 8B (CHASSIS ELECTRICAL) in this manual.

GMTB-4017-A

DIAGNOSIS (CONT.)

PROBLEM	POSSIBLE CAUSE	CORRECTION
Hazard Signal Lights Will Not Flash—Turn Signal Functions Normally	1. Blown fuse.	1. Replace fuse and check operation.
	2. Inoperative hazard warning flasher.	2. Replace the hazard warning flasher.
	3. Loose chassis to column connection.	3. Connect securely and check operation.
	4. Disconnect column to chassis connector. Connect new switch into system without removing old. Depress the hazard warning button and observe the hazard warning lights. If they now work normally, the turn signal switch is faulty.	4. Replace the turn signal switch.
	5. If the lights do not flash, check wiring harness "K" lead (brown) for open between hazard flasher and harmonica connector. If open, fuse block is faulty.	5. Replace fuse block. Refer to SEC. 8B (CHASSIS ELECTRICAL) in this manual.
Tone Alarm Does Not Sound With Key Fully Inserted In Lock Cylinder With Driver's Door Open	1. Loose connection at the tone alarm.	1. Connect securely.
	2. Voltage not available to the tone alarm.	2. Check the continuity of the chassis wiring and repair as required.
	3. Faulty tone alarm.	3. Replace the tone alarm.
	4. Door jamb switch on the driver's side is maladjusted or inoperative.	4. Adjust or replace as required.
	5. Short in the chassis wiring.	5. Check by separating chassis to column connector. Connect E and F female contacts on the chassis side (bent paper clip will work). If tone alarm sounds, continue diagnosis. If not, locate and repair chassis wiring.
	6. Short or fault in the signal switch wiring.	6. Connect male E and F contacts of connector with the jumper. Check buzzer switch pads with the ohmmeter. If contact is made, function is normal. If not, replace the signal switch.
	7. Chips, burrs, foreign material is preventing actuator tip function. NOTICE: Key must be removed or the cylinder in the "run" position before removing the lock cylinder.	7. Remove chips and burrs. Reassemble and check.
	8. Faulty lock cylinder.	8. With the lock cylinder out (refer to "Notice" under step 7), fully insert and remove the key. The actuator should extend and retract smoothly. Total expansion of tip should be 1.25 mm (0.050 inch). If not, replace the lock cylinder.
	9. Chips, foreign material affecting the tone alarm switch operation.	9. Remove and clean as required—reassemble and check.
	10. Damaged or broken tone alarm switch.	10. Replace the tone alarm switch.

GMTB-4018-A

DIAGNOSIS (CONT.)

PROBLEM	POSSIBLE CAUSE	CORRECTION
Tone Alarm Does Not Sound With Key Fully Inserted In Lock Cylinder With Driver's Door Open (Cont.)	11. Inoperative tone alarm switch (switch appears good but will not make the tone alarm switch function check). 12. Tone alarm switch contact gap is too large. 13. If the tone alarm fault has not yet been detected, connect a continuity meter (or light) to the male E and F connector contacts. Insert the key the full depth into the lock cylinder. If contact is made with the key in, and is not made with it out, the function is normal. Retrace the initial diagnostic steps. If contact is not established, the fault is in the column. 14. If the fault has not yet been isolated and repaired, connect ohmmeter to the tone alarm switch probes. Fully insert and remove the key from the lock cylinder. If contact is made with the key in, and is broken with it out, the function is normal. Retrace the diagnostic steps. If contact is not made, the fault is in the lock cylinder or tone alarm switch.	11. Connect the ohmmeter leads to the tone alarm switch probes. Press on the actuator pad until the interior points contact. If contact is not made, replace the tone alarm switch. 12. Reset the contact gap. 13. With the fault isolated in the column, disassemble the upper end of the column until the signal switch mounting screws have been removed. Lift the switch and check the probes of the tone alarm switch to ensure good contact with the pads in the signal switch. Bend the probes, if required, then reseat the signal switch and install the three screws. Check the function. 14. Setting the contact gap. Press a 0.75 mm (0.030 inch) wire type spark plug gap wire with flat piece of stock on the actuator pad. If contact is not made, adjust switch until positive contact is made (use ohmmeter). With positive contact at 0.75 mm (0.030 inch) use a 0.65 mm (0.025 inch) plug gap wire beneath the flat stock. No contact should occur. Adjust. When the switch will make contact with the 0.75 mm (0.030 inch) wire and not with the 0.65 mm (0.025 inch) wire, the tone alarm switch is set at the low limit.
Tone Alarm Continues To Operate With Key In The Lock Cylinder With The Driver's Door Either Opened Or Closed And Ceases When Key Is Removed	1. Door jamb switch on driver's side maladjusted or inoperative. 2. Wire from signal switch to door jamb switch shorted.	1. Adjust or replace as required. 2. If on signal switch side, replace signal switch. If on chassis side, find and repair.This condition indicates the lock cylinder or tone alarm switch is at fault. To verify, check for continuity at the E and F male connector contacts with the key removed from the cylinder. If continuity exists, the fault is in the column.
Tone Alarm Continues To Operate With Key Out, But Stops When Driver's Door Is Closed	1. Lock cylinder binding (turn lock toward start position. If tone alarm stops in the run position or when turned past run run towards the start, the problem is a sticky lock cylinder actuator). 2. Chips, foreign material in lock cylinder bore. 3. Sticky lock cylinder actuator tip. 4. Damaged or broken tone alarm switch. 5. Tone alarm switch contact gap is too close.	1. Replace the lock cylinder. 2. Remove, assemble and recheck function. 3. Replace the lock cylinder. 4. Replace the tone alarm switch. 5. Adjust as specified.

GMTB-4019-A

ON-VEHICLE SERVICE

INSPECTION

SHIFTER SHAFT

Separation of the shifter shaft sections will be internal and cannot be visually identified. Hold the lower end of the shifter shaft and move the shift lever on the column through its ranges and up and down. If there is little or no movement of the shifter shaft, the plastic joints are sheared.

STEERING SHAFT

If the steering shaft plastic pins have been sheared, the shaft will rattle when struck lightly from the side and some lash may be felt when rotating the steering wheel while holding the flexible coupling. If the steering shaft pins are sheared due to minor collision without serious damage to other components, the vehicle can be safely steered; however, steering shaft replacement is recommended.

COLUMN JACKET

Inspect the jacket section of the column for looseness and/or bends.

COLUMN SUPPORT BRACKET

Damage in this area will be indicated by separation of the mounting capsules from the bracket. The bracket will have moved forward toward the engine compartment and will usually result in collapsing of the jacket section of the steering column.

STEERING COLUMN FOR ACCIDENT DAMAGE

NOTICE: Vehicles involved in accidents resulting in frame damage, major body or sheet metal damage, or where the steering column has been impacted may also have a damaged or misaligned steering column.

Inspect (Figures 1 through 3)

1. Capsules on the steering column bracket assembly. The capsules must be within 1.59mm (1/16-inch) from the bottom of the slots (figure 1). If not, the bracket should be replaced.
2. Contact surface (figure 1). The bolt head must not contact surface "B" or the shear load will be increased. If contact is made, replace the bracket.
3. Shift lever operation on vehicles with automatic transmission and column shift. If the shift lever is able to move to the "Park" position without raising the lever, the upper shift tube plastic bearing is broken.
4. Jacket collapse. Measure the jacket collapse dimensions, depending on the vehicle and steering column, in either of the following ways (figure 2).
   - Measure from the collar on the toe plate flange to the lower edge of the upper jacket (E).
   - Measure from the edge of the back-up switch window to the lower edge of the upper jacket (D).
   - If the jacket dimensions are not within specifications, a new jacket must be installed.
   - Visually inspect for sheared injected plastic in the shift tube and the steering shaft (figure 3). If either one or both are sheared, replace with new parts.
5. Any frame damage that could cause a bent steering shaft must have the steering shaft runout checked in the following manner. Remove intermediate shaft. Hold a ruler against the lower end of steering shaft and have an assistant turn the steering wheel. The turnout must not exceed 1.59 mm (1/16-inch). A dial indicator may be used instead of a ruler.

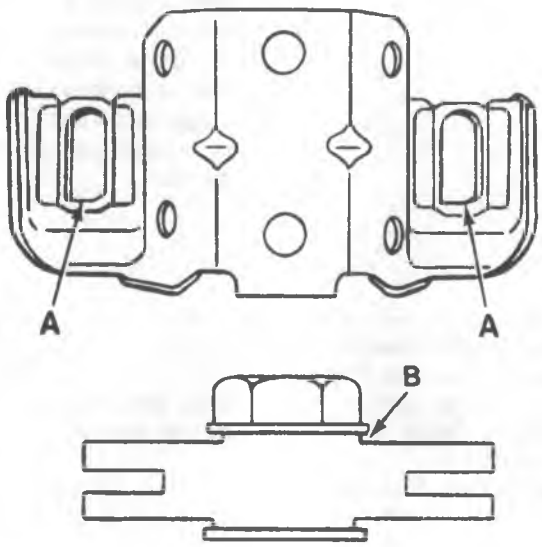

A. Capsules must be within 1.59 mm (1/16") from bottom of slots. If not, replace bracket assembly.
B. The bolt head must not contact surface "B." If contact is made, the capsule shear load will be increased—Replace bracket.

B7380

Figure 1 – Steering Column Bracket Inspection

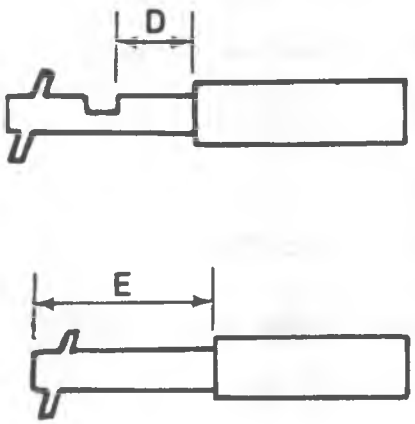

D. 72 mm (2.8 inches) R V MODEL (Standard Column-Column Shift)
E. 353 mm (14 inches) R V MODEL (Standard Column-Floor Shift)

V0023

Figure 2 – Steering Column Collapse Inspection

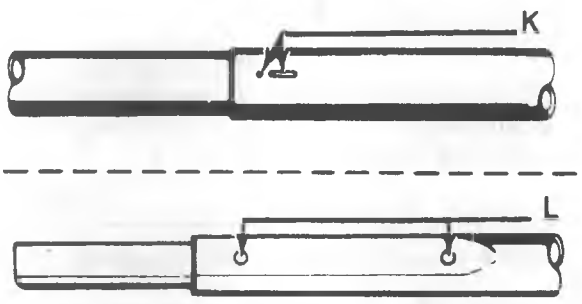

K. Inspect for sheared injected plastic in the shift tube.
L. Inspect for sheared injected plastic in the steering shaft.

B7382

Figure 3 – Steering Column Injected Plastic Inspection

STEERING WHEEL REPLACEMENT

Remove or Disconnect (Figure 4)

Tool Required:

J 1859-03 Steering Wheel Puller

1. Negative battery cable.
2. Horn button cap.
3. Retainer and steering wheel nut.
4. Horn lead assembly (some models).
   - Mark the relationship of the steering wheel to the steering shaft.
5. Steering wheel. Use J 1859-03 (figure 4). Do not hammer on the puller, or damage could result to the steering column.

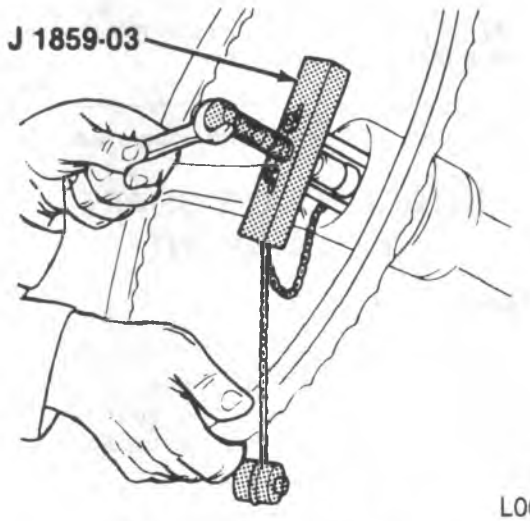

L0652

Figure 4 – Steering Wheel Removal

Install or Connect (Figure 5)

- The turn signal control assembly must be in the neutral position when assembling the steering wheel.

1. Steering wheel onto the steering shaft. Align the marks made at removal.

Important

- Do not misalign the steering wheel more than 25.4 mm (1-inch) from the horizontal centerline (figure 5).

2. Horn lead assembly.

NOTICE: See "Notice" on page 3F1-1 of this section.

3. Steering nut.

Tighten

- Nut to 40 N•m (30 ft. lbs.).

4. Retainer.
5. Horn button cap.
6. Negative battery cable.

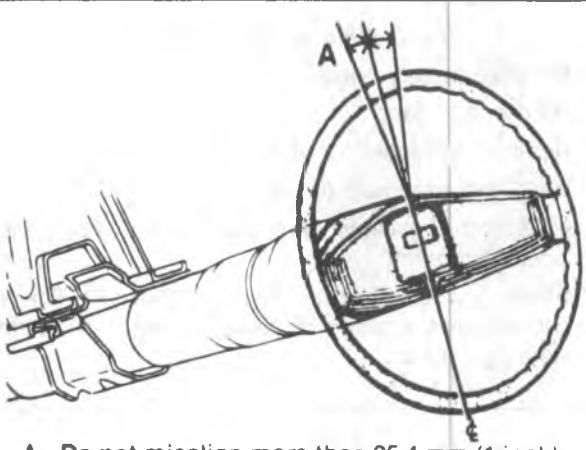

A. Do not misalign more than 25.4 mm (1 inch) from the vertical centerline.

F2675

Figure 5—Steering Wheel Alignment

INTERMEDIATE SHAFT REPLACEMENT

Remove or Disconnect

- Set front wheels in the straight-ahead position.
- Mark the intermediate shaft to steering shaft and the flexible coupling to steering gear wormshaft relationships to be sure of proper installation.

1. Pinch bolt at flexible coupling.
2. Bolt and nut at pot coupling.
3. Intermediate shaft assembly by sliding shaft up (towards dash) to get flexible coupling to clear steering gear wormshaft. Then slide shaft down off upper steering shaft. This may require the use of a small hammer tapping on the pot coupling to free it from the shaft.

Install or Connect

1. Upper end of intermediate shaft onto upper steering shaft. Align marks made at removal.
2. Lower end of intermediate shaft onto steering gear wormshaft.

NOTICE: See "Notice" on page 3F1-1 of his section.

3. Pinch bolts at flexible coupling and bolt and nut at pot coupling.

Tighten

- Pinch bolt to 102 N•m (75 ft. lbs.).
- Bolt and nut to 88 N•m (65 ft. lbs.).

FLEXIBLE COUPLING REPLACEMENT

Remove or Disconnect (Figure 6)

1. Intermediate shaft. Refer to "Intermediate Shaft Replacement" in this section.
- Clamp shaft in vise.
2. Coupling to flange nuts and washers (2).

Install or Connect (Figure 6)

1. Coupling onto flange.

NOTICE: See "Notice" on page 3F1-1 of this section.

2. Nuts and washers (2).

Tighten

- Nuts (2) to 27 N•m (20 ft. lbs.)

3. Intermediate shaft. refer to "Intermediate Shaft Replacement" in this section.

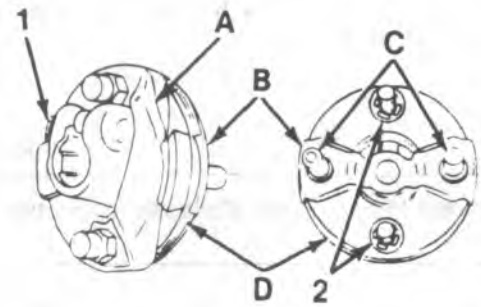

A. Capturing Strap
B. Reinforcement
C. Alignment Pins
D. Wafer

1. Clamp Bolt
2. Nuts And Washers

B7385

Figure 6—Flexible Type Steering Coupling

POT COUPLING REPLACEMENT

Remove or Disconnect (Figure 7)

1. Intermediate shaft. Refer to "Intermediate Shaft Replacement" in this section.
   - Clamp shaft in vise.
2. Retainer clip (94).
3. Coupling (93).
4. Washer (97).
5. Bearings (95) and spring (96).
   - Remove shaft from vise.
6. Pin (98).
   - Using a socket large enough to accept the pin, begin removing the pin using a press. Once the pin is flush with the bushing (102), use a bolt with a diameter smaller than the pin itself to complete removal of the pin.

7. Clamp (101).
8. Seal (98).

Clean

- Clean all parts for inspection.

Inspect

- Inspect all parts for wear and replace as required. The bushing (102) is only serviceable with the shaft. All other parts are serviced separately.

Install or Connect (Figure 7)

1. Clamp (101) onto seal (99).
2. Seal (99) onto shaft (100).
3. Bushing (102).
4. Pin (98) using press. Be sure pin extends from either side of shaft an equal length.
   - Set seal so it butts up against bushing.
5. Washer (97) into seal (99).
   - Pack bearings with an approved high-temperature grease such as GM part number 1051344 or equivalent.
6. Bearings (95) and spring (96) onto pin (98).
   - Pack coupling (93) with an approved high-temperature grease such as GM part number 1051344 or equivalent.
7. Coupling (93).
8. Retainer clip (94).
9. Intermediate shaft. Refer to "Intermediate Shaft Replacement," in this section.

STEERING COLUMN REPLACEMENT

Remove or Disconnect (Figure 8)

1. Negative battery cable.
2. Transmission control linkage from the column shift tube levers.
3. Nuts and washers (2) that secure the flanged end of the steering shaft to the flexible coupling.
4. Nuts (10) and clamp (11).
5. Steering wheel. Refer to "Steering Wheel Replacement" in this section.
6. Steering column harness at the connector.
   - Disconnect the neutral-start and back-up lamp switch connectors (some models). Refer to LIGHTING SYSTEMS (SEC. 8B) in this manual.
7. Transmission indicator cable (some models).
8. Screws (6), upper cover (3), lower cover (5) and seal (4).
9. Screws (7), nuts (8) and bracket (9).
10. Steering column assembly. Rotate the column so the shift lever clears the dash opening.

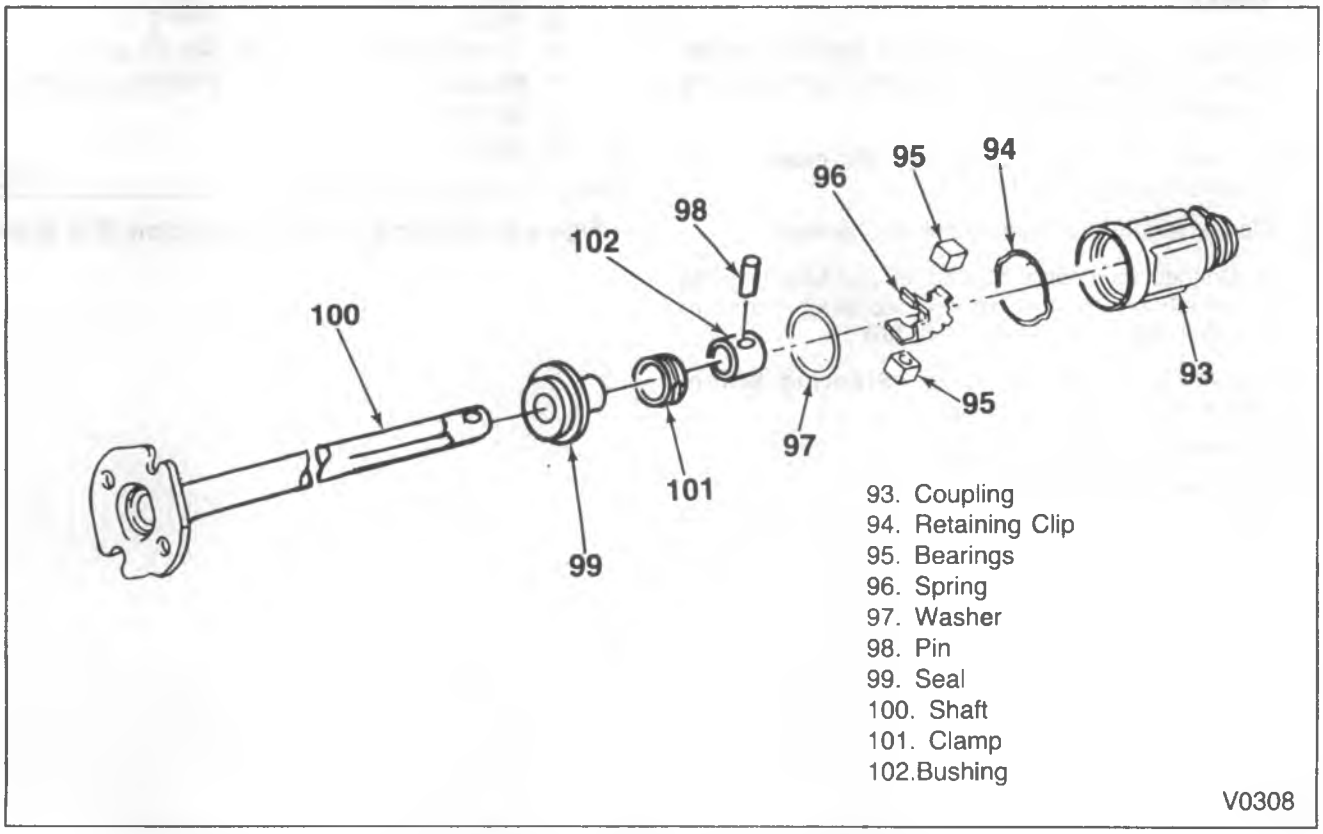

Figure 7–Intermediate Shaft Pot Coupling Components

Install or Connect (Figure 8)

NOTICE: For steps 4, 6 and 12, see "Notice" on page 3F1-1 of this section.

1. Plastic spacers onto the flexible coupling alignment pins.
2. Lower end of the steering column through the dash opening.
3. Lower steering shaft flange onto the flexible coupling (13).
4. Flange to coupling washers and nuts (1).

Tighten

- Nuts to 27 N•m (20 ft. lbs.)

5. Screws (7) and (8) and bracket (9) loosely. Tighten screws and nuts finger tight.
6. Clamp (11) and nuts (10).

Tighten

- Nuts (10) to 24 N•m (18 ft. lbs.).
- Screws (7) and nuts (8) to 30 N•m (22 ft. lbs.).

7. Seal (4) and covers (3 and 5) to the dash.
8. Screws (6).
   - Remove plastic spacers from the flexible coupling pins.

Measure

- Flexible coupling (13) must not be distorted greater than ± 1.5mm (0.06-inch) due to pot coupling bottoming, in either direction.

9. Transmission indicator cable (R/V models with automatic transmission).
10. Connectors to the steering column harness.
    - Connect the neutral-start switch and back-up lamp switch connectors (some models). Refer to LIGHTING SYSTEMS (SEC. 8B).
11. Steering wheel. Refer to "Steering Wheel Replacement" in this section.
12. Transmission control linkage.
13. Negative battery cable.

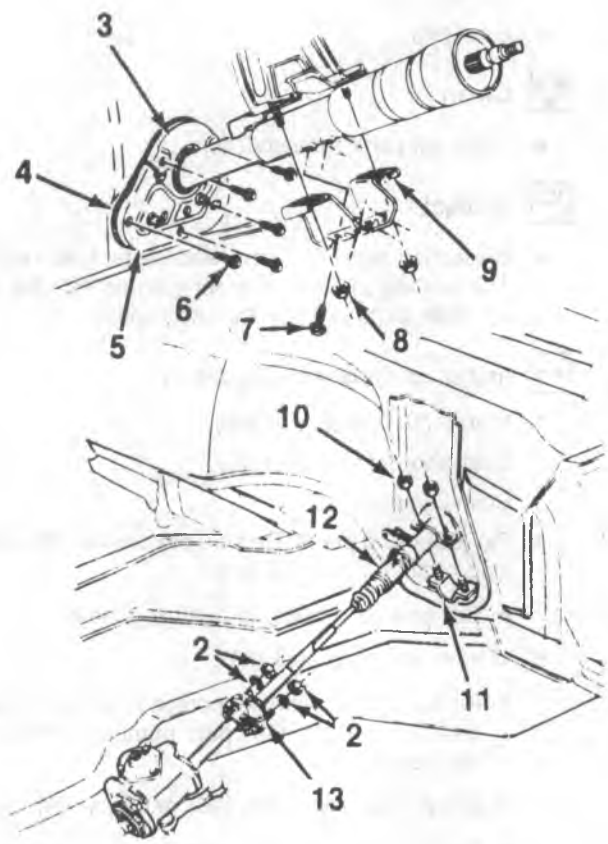

2. Nuts and Washers
3. Upper Cover
4. Seal
5. Lower Cover
6. Screws
7. Screws
8. Nuts
9. Bracket
10. Nuts
11. Clamp
12. Dot Coupling
13. Flexible Coupling

V0134

Figure 8 – Steering Column Installation (R/V Model)

TURN SIGNAL SWITCH REPLACEMENT

Remove or Disconnect (Figures 9 through 12)

Tool Required:

J 23653-C Lock Plate Compressor

1. Steering wheel. Refer to "Steering Wheel Replacement" in this section.
2. Lock plate.

- Position a screwdriver blade into the steering shaft lock cover slot. Pry up and out to free the cover from the lock plate.
- Screw the center post of J 23653-C onto the steering shaft as far as it will go. Compress the lock plate by turning the center post nut clockwise. Pry the retaining ring out of the shaft (figure 9). Remove J 23653-C.

Important

- If the column is being disassembled on a bench, the shaft could slide out of the end of the mast jacket when the snap ring is removed.

3. Multi-function lever.

- Grasp lever and pull it straight out of the pivot. Gently pull harness out of column and disconnect. See figure 11.

4. Hazard warning knob.

- Remove retainer screw (figure 12).

5. Turn signal switch mounting screws.

- Pull the switch up and free the connector, then disconnect switch from harness (figure 10).

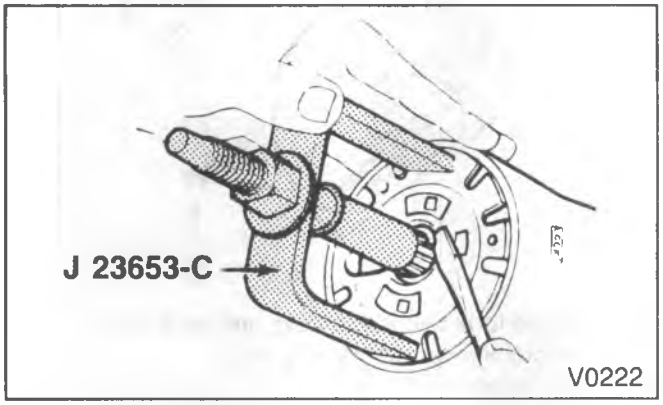

Figure 9 – Retaining Ring Removal

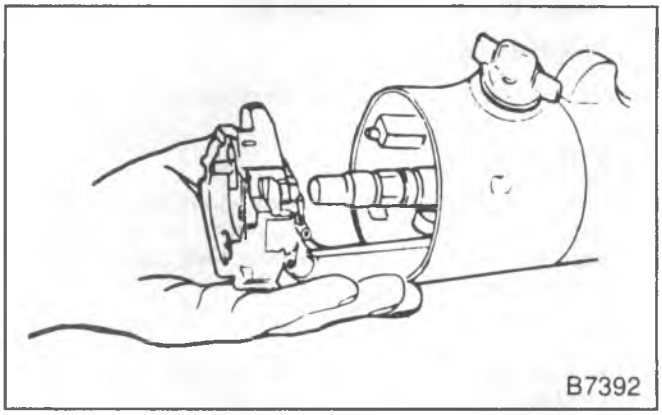

Figure 10 – Turn Signal Switch Assembly Removal

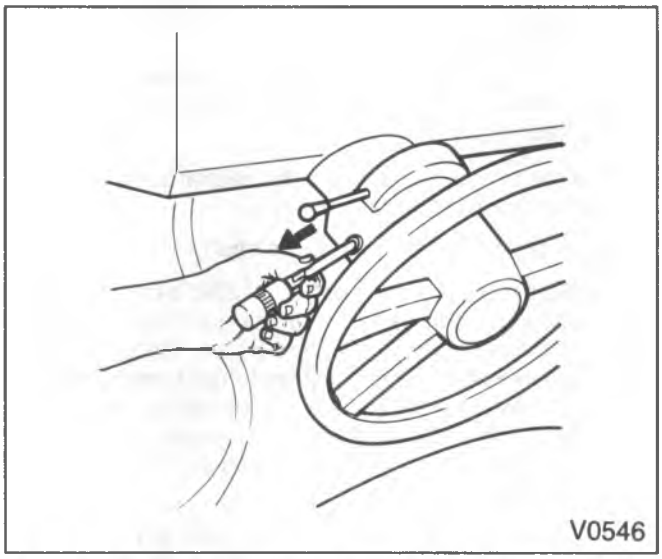

Figure 11 – Removing/Installing Multi-Function Lever

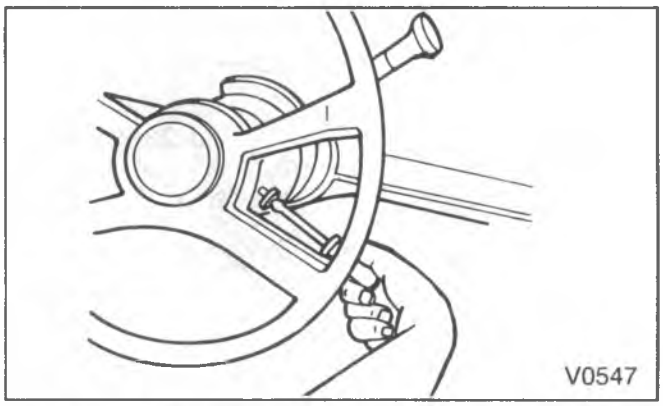

Figure 12 – Removing Hazard Warning Knob

Install or Connect (Figure 13)

Tool Required:

J 23653-C Lock Plate Compressor

Important

- Use only the specified screws, bolts and nuts at assembly. The use of over-length screws could prevent a portion of the assembly from compressing under impact.

1. Connect switch to harness.
   - Feed the connector and harness into the column. Make sure no wires are pinched.
2. Turn signal switch and mounting screws.
3. Hazard warning knob and retainer screw.
4. Turn signal lever.
   - Connect harness and feed into column. Align notches on lever with those on the pivot, then snap lever in place.
- Put the turn signal switch in the neutral position. Pull out on the hazard warning knob.
5. Lock plate onto the end of the shaft.
   - Screw the center post of J 23653-C onto the steering shaft as far as it will go. Place a NEW retaining ring over the center post. Place the "C" bar over the center post and then compress the lock plate by turning the nut clockwise. Slide the new retaining ring down the tapered center post and into the shaft groove (figure 3). Remove J 23653-C.
6. Cover on the lock plate and snap into position.
7. Steering wheel. Refer to "Steering Wheel Replacement" in this section.

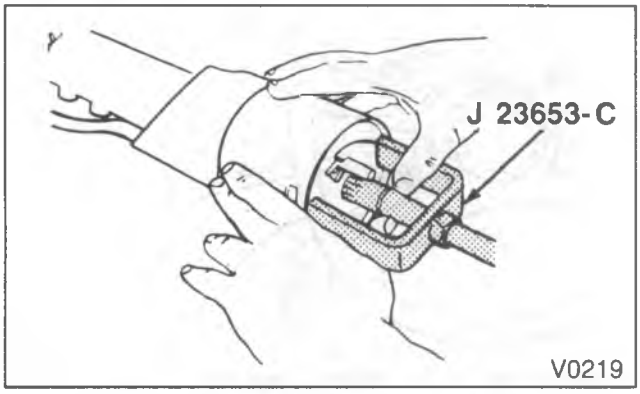

Figure 13—Retaining Ring Installation

LOCK CYLINDER REPLACEMENT

Remove or Disconnect (Figure 14)

- Place the lock cylinder in the "RUN" position.

1. Steering wheel. Refer to "Steering Wheel Replacement" in this section.
2. Turn signal switch. Refer to "Turn Signal Switch Replacement" in this section.
   - It is not necessary to completely remove the turn signal switch from the column. Pull the switch rearward far enough to slip it over the end of the shaft. Disconnecting the harness is not necessary.
3. Retaining screw and the lock cylinder set.

Important

- If the retaining screw is dropped on removal, it could fall into the column, requiring a complete disassembly to retrieve the screw.

Install or Connect (Figure 14)

1. Lock cylinder set.
   - Align the cylinder key with the keyway in the housing. Rotate as shown in figure 14.
   - Push the lock all the way in.

NOTICE: See "Notice" on page 3F1-1 of this section.

2. Retaining screw.

Tighten

- Screw to 5 N•m (44 in. lbs.).

3. Turn signal switch. Refer to "Turn Signal Switch Replacement" in this section.
4. Steering wheel. Refer to "Steering Wheel Replacement" in this section.

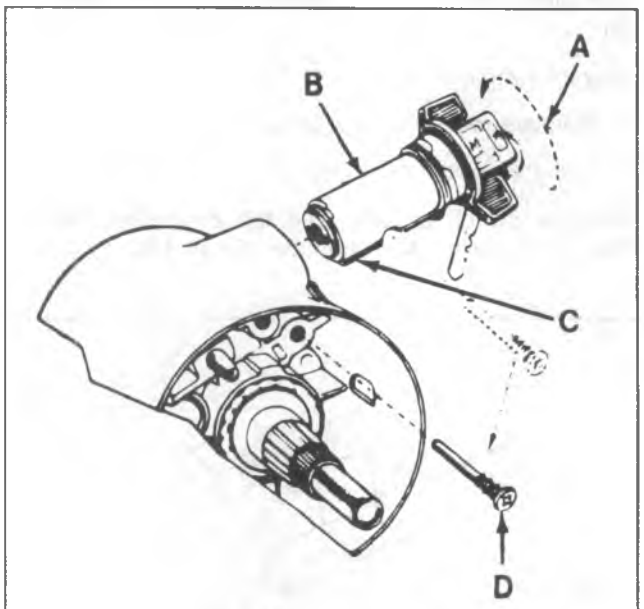

A. Hold the lock cylinder sleeve and rotate the knob clockwise against the stop.
B. Lock Cylinder Set
C. Cylinder Key
D. Lock Retaining Screw

Figure 14—Lock Cylinder Installation

TONE ALARM SWITCH REPLACEMENT

Remove or Disconnect

1. Steering wheel. Refer to "Steering Wheel Replacement" in this section.
   - Pull the turn signal switch up far enough to allow access to the tone alarm switch. Refer to "Turn Signal Switch Replacement" in this section.
   - The tone alarm switch may be removed without removing the lock cylinder. The lock cylinder must be in the "RUN" position.
2. Tone alarm switch assembly (33) (figure 16).
   - Pull the tone alarm switch straight out of the housing using a paper clip or similar tool. A flat spring wedges the switch toward the lock cylinder.

Important

- Be careful not to let the flat spring fall down into the housing and do not pull on the switch contacts or plastic material of the switch when removing.

Install or Connect

1. Tone alarm switch to the spring clip with the formed end of the clip around the lower end of the switch. The spring is bowed away from the switch.
   - Lay the spring on the switch opposite the contacts.
2. Tone alarm switch and spring into the hole with the contacts toward the lock cylinder bore.
3. Turn signal switch. Refer to "Turn Signal Switch Replacement" in this section.
4. Steering Wheel. Refer to "Steering Wheel Replacement" in this section.

IGNITION SWITCH REPLACEMENT

The ignition switch is mounted on top of the column jacket near the front of the dash, inside the channel section of the brake pedal support.

The switch is actuated by a rod and rack assembly. A portion of the rack is toothed and engages a gear on the end of the lock cylinder. This enables the rod and rack to be moved axially (with respect to the column) to actuate the switch when the lock cylinder is rotated.

Remove or Disconnect

- Lower the steering column. Refer to "Steering Column Replacement" in this section. It is not necessary to remove the steering wheel.

Important

- Properly support the steering column if it is not removed from the vehicle.

- Put the ignition switch in the "LOCK" position.
  - If the lock cylinder was removed, the actuating rod to the switch should be pulled up until there is a definite stop, then moved down one detent, which is the "LOCK" position.

1. Two ignition switch screws.
2. Ignition switch assembly.

Install or Connect (Figure 15)

- Put the ignition switch in the "LOCK" position (figure 15).

1. Activating rod into the ignition switch.
2. Ignition switch and screws to the column.
3. Steering column assembly. Refer to "Steering Column Replacement" in this section.

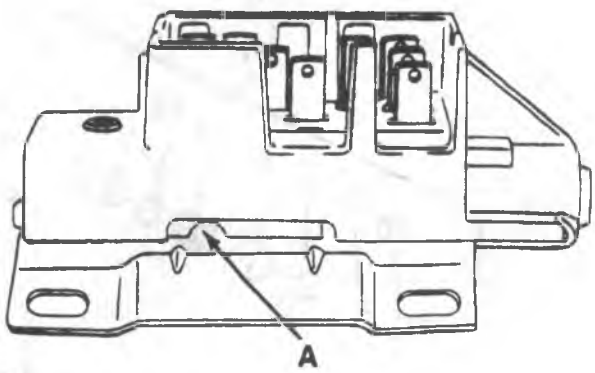

A. Switch In The Lock Position

B7395

Figure 15 – Ignition Switch Assembly

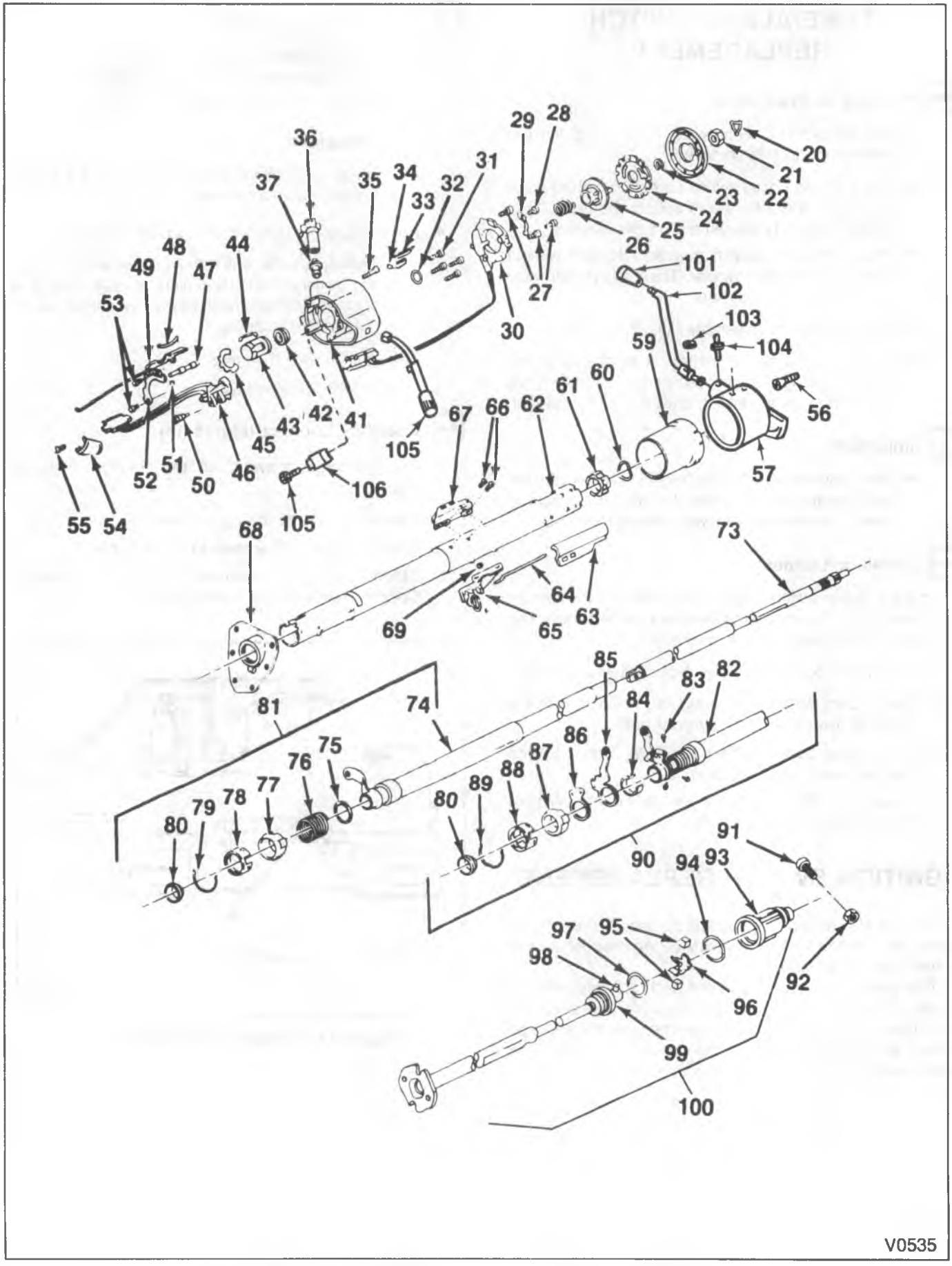

Figure 16 – Standard Steering Column – Column Shift (R/V Model)

20. Retainer	50. Actuator Pivot Pin	82. Shift Tube
21. Nut	51. Washer	83. Bolt
22. Lock Plate Cover	52. Shift Lever Gate	84. Spacer
23. Retainer	53. Shift Lever Screw	85. Lower Shift Lever
24. Lock Plate	54. Housing Cover	86. Adapter Plate
25. Cancelling Cam	55. Cover Screw	87. Adapter
26. Bearing Preload Spring	56. Shift Lever Spring	88. Retainer
27. Turn Signal Screws	57. Gear Shift Housing	89. Adapter Clip
28. Tap Screw	59. Gear Shift Shroud	90. Manual Transmission
29. Actuator Arm	60. Washer	91. Bolt
30. Turn Signal Switch	61. Gear Shift Housing Bearing	92. Nut
31. Turn Signal Housing Screws	62. Jacket	93. Coupling
32. Washer	63. Wiring Protector	94. Retainer
33. Tone Alarm Switch	64. Actuator Rod	95. Bearing
34. Retainer Clip	65. Dimmer Switch	96. Spring
35. Retainer Screw	66. Ignition Switch Screw	97. Washer
36. Ignition Lock	67. Ignition Switch	98. Pin
37. Actuator Sector	68. Dash Seal	99. Seal
41. Housing Assembly	73. Shaft	100. Intermediate Shaft
42. Bearing	74. Shift Tube	101. Knob
43. Bushing	75. Washer	102. Shift Lever
44. Horn Contact	76. Spring	103. Insulator
45. Upper Bearing Retainer	77. Adapter	104. Retainer Pin
46. Dimmer Pivot And Wiper Switch	78. Reinforcement	105. Screw
47. Shaft Lock Bolt	79. Retaining Clip	106. Hazard Warning Knob
48. Switch Rack Preload Spring	80. Lower Bearing	
49. Actuator Rack	81. Automatic Transmission	V0536

Figure 17 – Standard Steering Column – Column Shift (R/V Model)

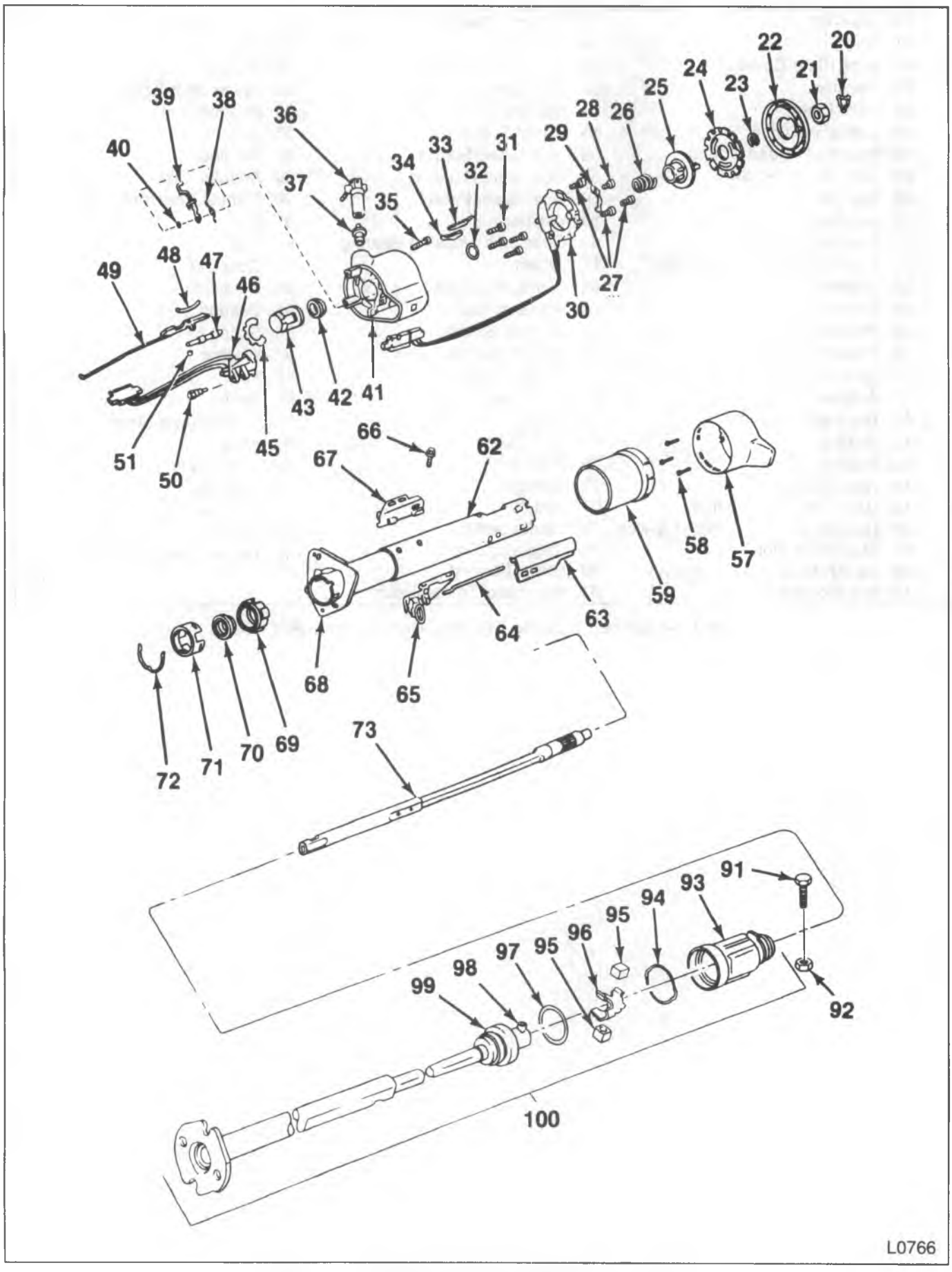

Figure 18 – Standard Steering Column (R/V Model)

UNIT REPAIR

Remove or Disconnect

- Steering column assembly. Refer to "Steering Column Replacement" in this section.

Disassemble (Figures 16 through 22)

1. Dash panel bracket and screws from the column.
2. Clamp the steering column in a vise.
   - Clamp at the lower end of the jacket.
3. Steering wheel. Refer to "Steering Wheel Replacement" in this section.
4. Turn signal switch. Refer to "Turn Signal Switch Replacement" in this section.
5. Lock cylinder. Refer to "Lock Cylinder Replacement" in this section.
6. Tone alarm switch. If it needs to be serviced. Refer to "Tone Alarm Switch Replacement" in this section.

Important

- The buzzer switch does not have to be removed to remove the upper bearing housing.

7. Ignition switch. Refer to "Ignition Switch Replacement" in this section.
8. Shift lever pivot pin and lever.
9. Upper bearing washer (32).
10. Screws (35) attaching the turn signal and ignition lock housing.
11. Housing assembly (figure 20).
12. Bushing (43) and retainer (45) from the lower side of the housing.
13. Ignition switch actuating rod, rack assembly (49), rack preload spring (48), shaft lock bolt (47) and spring assembly from housing.
14. Shift lever gate (52).
15. Ignition switch actuator sector through the lock cylinder hole by pushing firmly on the block tooth of the sector with a blunt punch or screwdriver (figure 21).
16. Gear shift lever housing (57) and shroud (59) from the jacket assembly (62).
    - On floor shift models remove the transmission control lock tube housing and shroud.
17. Shift lever spring (56) from the gear shift lever housing.
    - On floor shift models remove the lock tube spring.
18. Steering shaft from the lower end of the jacket assembly.
19. Back-up switch or neutral-safety switch. Refer to LIGHTING SYSTEMS (SEC. 8B).

20. Retainer
21. Nut
22. Lock Plate Cover
23. Retainer
24. Lock Plate
25. Cancelling Cam
26. Bearing Preload Spring
27. Turn Signal Screws
28. Tap Screw
29. Actuator Arm
30. Turn Signal Switch
31. Turn Signal Housing Screws
32. Washer
33. Tone Alarm Switch
34. Retainer Clip
35. Retainer Screw
36. Ignition Lock
37. Actuator Sector
38. Key Release Spring
39. Key Release Lever
40. Key Release Washer
41. Housing Assembly
42. Bearing
43. Bushing
44. Horn Contact
45. Upper Bearing Retainer
46. Dimmer Pivot And Wiper Switch
47. Shaft Lock Bolt
48. Switch Rack Preload Spring
49. Actuator Rack
50. Actuator Pivot Pin
51. Washer
57. Gear Shift Housing
58. Signal Switch Mounting Screws
59. Gear Shift Housing
62. Jacket
63. Wiring Protector
64. Actuator Rod
65. Dimmer Switch
66. Ignition Switch Screw
67. Ignition Switch
68. Dash Seal
69. Adapter
70. Bearing
71. Reinforcement
72. Retaining Clip
73. Shaft
91. Bolt
92. Nut
93. Coupling
94. Retainer
95. Bearing
96. Spring
97. Washer
98. Pin
99. Seal
100. Intermediate Shaft

L0755

Figure 19 – Standard Steering Column (R/V Model)

20. Lower bearing retaining clip (figure 22).

- Automatic and Floorshift Columns:
  - Remove the lower bearing reinforcement, bearing adapter assembly, shift tube spring and washer. The lower bearing may be removed from the adapter by light pressure on the bearing outer race.
  - Slide out the shift tube assembly.
- Manual Transmission (Column Shift):
  - Remove the lower bearing adapter, bearing and the first reverse shift lever. The lower bearing may be removed from the adapter by light pressure on the bearing outer race.
  - Remove the three screws from the bearing at the lower end and slide out the shift tube assembly.
  - Remove the gear shift housing lower bearing from the upper end of the mast jacket.

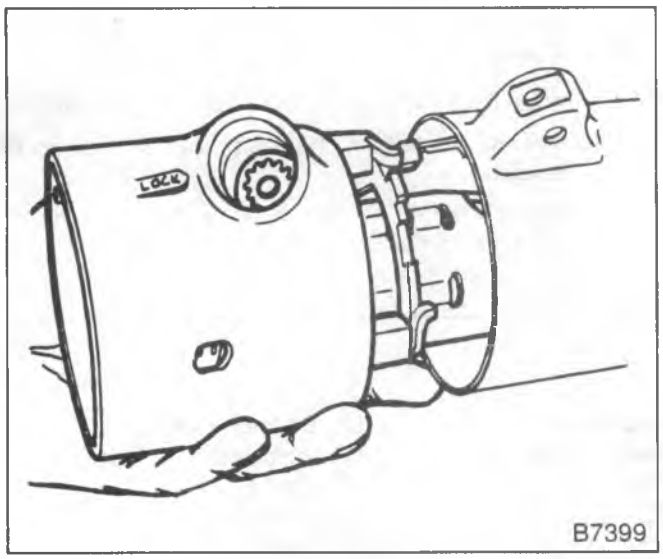

Figure 20—Turn Signal Housing Removal

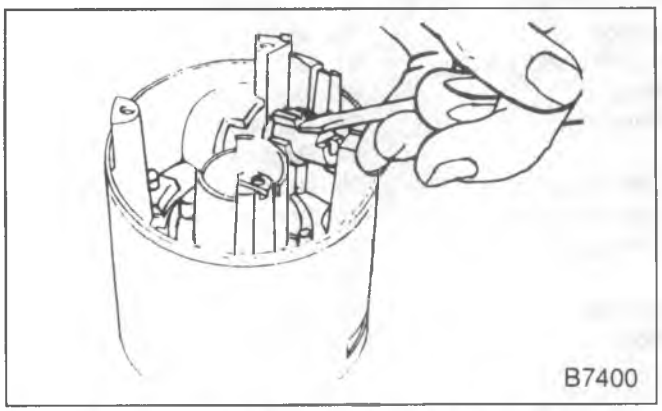

Figure 21—Ignition Switch Actuator Sector Removal

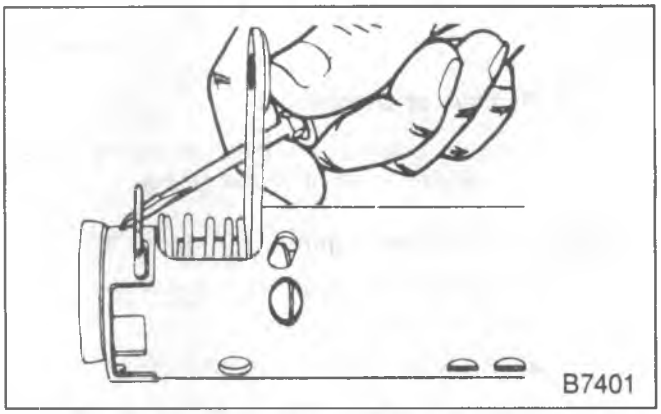

Figure 22—Lower Bearing Retainer Removal

Assemble (Figures 15, through 19, 23 and 24)

- Apply a thin coat of lithium grease to all friction surfaces.

1. Sector into the turn signal and lock cylinder housing.
   - Install the sector in the lock cylinder hole over the sector shaft with the tang end to the outside of the hole.
   - Press the sector over the shaft with a blunt tool.
2. Shift lever detent plate onto the housing.
3. Rack preload spring (48) into the housing from the bottom side. The long section should be toward the handwheel and hook onto the edge of the housing (figure 23).
4. Locking bolt (47) onto the crossover arm on the rack (49) and insert the rack and lock bolt assembly into the housing from the bottom with the teeth up (toward steering wheel) and toward the centerline of the column.
   - Align the first tooth on the sector with the first tooth on the rack; if aligned properly, the block teeth will line up when the rack assembly is pushed all the way in.
5. Retainer (45) and bushing (43).
6. Gear shift housing lower bearing. Insert the bearing from the very end of the jacket.
   - Align the indentations in the bearing with the projections on the jacket (figure 24). If the bearing is not installed correctly, it will not rest on the stops provided.
7. Shift lever spring (56) into the gear shift lever (or lock tube) housing.
8. Housing (57) and shroud (59) assemblies onto the upper end of the mast jacket.
   - Rotate the housing to be sure it is seated in the bearing.
9. Turn signal and lock cylinder housing onto the jacket.
   - The gear shift housing should be in the "Park" position and the rack pulled downward.
   - Seat the turn signal housing and install the four screws (35).

10. Lower bearing into the adapter assembly.
11. Shift tube assembly into the lower end of the jacket. Rotate until the upper shift tube key slides into the housing keyway.

- Automatic and Floor Shift Columns:
  - Install the spring and lower bearing adapter assembly into the bottom of the jacket.
  - Hold the adapter in place and install the lower bearing reinforcement and retainer clip. The clip snaps into the jacket and reinforcement slots.
- Manual Transmission (Column Shift):
  - Loosely attach the three screws in the jacket and shift tube bearing.
  - Assemble the first reverse lever, lower bearing and adapter assembly into the bottom of the jacket.
  - Hold the adapter in place and install the bearing reinforcement and retaining clip. The clip snaps into the jacket and reinforcement slots.
  - Adjust the lower bearing. Refer to the "Manual Transmission (Column Shift) Lower Bearing Adjustment" in this section.

12. Back-up switch or neutral-safety switch. Refer to LIGHTING SYSTEMS (SEC. 8B).
13. Steering shaft into the column.
14. Upper bearing washer (32).
15. Ignition switch. Refer to "Ignition Switch Replacement" in this section.
16. Tone alarm switch, if removed. Refer to "Tone Alarm Switch Replacement" in this section.
17. Lock cylinder. Refer to "Lock Cylinder Replacement" in this section.
18. Turn signal switch. Refer to "Turn Signal Switch Replacement" in this section.
19. Steering wheel. Refer to "Steering Wheel Replacement" in this section.
20. Shift lever and pivot pin.
    - Remove the column from the vise.
21. Dash panel bracket and screws to the column.

Install or Connect

- Steering column assembly. Refer to "Steering Column Replacement" in this section.

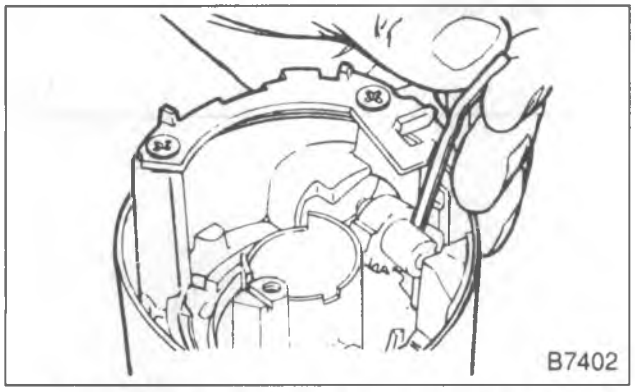

Figure 23 – Rack Preload Spring Installation

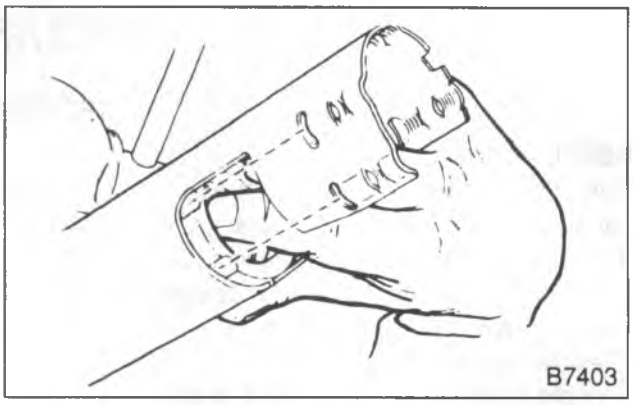

Figure 24 – Gearshift Housing Lower Bearing Installation

LOWER BEARING ADJUSTMENT

MANUAL TRANSMISSION (COLUMN SHIFT)

Adjust (Figure 25)

1. Put the transmission in neutral and disconnect the transmission rods.
2. Test for rotational drag by turning the shift lever through the 2-3 shift arc. The drag measured must not be more than 9 N (2 lbs.).
3. Loosen the three clamping screws.
   - Increase clearance by sliding the clamping screws in the direction of arrow "B" until the first reverse lever is free of drag (figure 25).
   - Decrease clearance by sliding the clamping screws in the direction of arrow "A" until a slight drag is felt at the first reverse shift lever (figure 25).
4. Install a 0.13 mm (0.005-inch) thick shim between the space and either of the shift levers.
5. Slide the clamping screws in the direction of arrow "B" until the system is loose. Slide the screws in the opposite direction until a drag is felt at the first reverse shift lever.
6. Tighten the clamping screws.
7. Remove the shim.
8. Install the transmission rods.

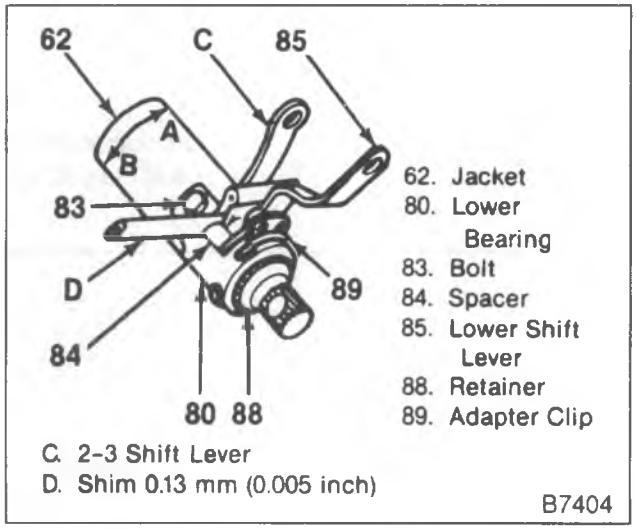

Figure 25 – Lower Bearing Adjustment

SPECIFICATIONS

FASTENER TORQUE

DESCRIPTION	N·m	Ft. Lbs.	In. Lbs.
Turn Signal Switch Attaching Screws	4.0	—	35
Ignition Switch Attaching Screws	4.0	—	35
Dimmer Switch Attaching Screws	4.0	—	35
Turn Signal Housing Retaining Screws	5.0	—	45
Steering Wheel Nut	40	30	—
Flexible Coupling Clamp Bolt	42	31	—
Flexible Coupling To Flange Bolt Nuts	27	20	—
Steering Gear To Frame Bolts (R and V Models)	88	65	—
Steering Gear To Frame Bolts P3, (32, 42) FS3	88	65	—
Steering Gear To Frame Bolts P3 (42) Excluding FS3	88	65	—
Intermediate Shaft Clamp Bolt/Nut	23	—	20
Column Support Outer Brace Bolt P3 (42)	25	—	18
Intermediate Shaft Pinch Bolt P3 (42) FS3	102	75	—
Intermediate Shaft Pinch Bolt P3 (42) Excluding FS3	102	75	—
Steering Column Support Bracket Screws (R and V)	30	22	—
Steering Column Support Bracket Clamp Nuts (P-Models)	25	18	—
Steering Column Shaft To Intermediate Shaft (Pot Coupling) Assembly	60	44	—

TB-3023-2A

SPECIAL TOOLS

1 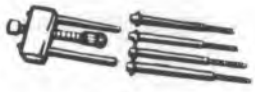 J 1859-03

2 J 23653-C

1. Crankshaft Front Cover Oil Seal Puller
2. Lock Plate Compressor

V0022

SECTION 3F2

STEERING COLUMN—TILT

NOTICE: When fasteners are removed, always reinstall them at the same location from which they were removed. If a fastener needs to be replaced, use the correct part number fastener for that application. If the correct part number fastener is not available, a fastener of equal size and strength (or stronger) may be used. Fasteners that are not reused, and those requiring thread locking compound will be called out. The correct torque value must be used when installing fasteners that require it. If the above conditions are not followed, parts or system damage could result.

CONTENTS

SUBJECT	PAGE
Description	3F2- 1
Diagnosis	3F2- 2
On-Vehicle Service	3F2- 9
Inspection	3F2- 9
Steering Wheel Replacement	3F2-10
Intermediate Shaft Replacement (R/V Models)	3F2-10
Flexible Coupling Replacement (R/V and P Models; Motorhome)	3F2-11
POT Coupling Replacement	3F2-11
intermediate Shaft Replacement (P Models; Commercial)	3F2-11
Steering Column Replacement	3F2-12
Turn Signal Switch Replacement	3F2-16
Lock Cylinder Replacement	3F2-17
Tone Alarm Switch Replacement	3F2-18
Ignition Switch Replacement	3F2-18
Multi-Function Switch Replacement	3F2-18
Unit Repair	3F2-19
Intermediate Shaft (P Models; Commercial)	3F2-26
Specifications	3F2-27
Special Tools	3F2-28

DESCRIPTION

The locking energy absorbing steering column includes three important features in addition to the steering function:

1. The column is energy absorbing, designed to compress in a front-end collision to minimize the possibility of injury to the driver of the vehicle.
2. The ignition switch and lock are mounted conveniently on the column.
3. With the column mounted lock, the ignition, steering and gearshifting operation can be locked to inhibit theft of the vehicle.

The column may be disassembled and reassembled. To insure the energy absorbing action, it is important that the specified screws, bolts and nuts be used only as designated and that they are tightened to the specified torque.

When the column is removed from the vehicle, such actions as a sharp blow on the end of the steering shaft or shift lever, leaning on the column assembly, or dropping of the assembly could shear or loosen the plastic fasteners that maintain column rigidity.

DIAGNOSIS

PROBLEM	POSSIBLE CAUSE	CORRECTION
Lock System Will Not Unlock	1. Lock bolt damaged. 2. Faulty lock cylinder. 3. Damaged housing. 4. Damaged or collapsed sector. 5. Damaged rack.	1. Replace the lock bolt. 2. Replace or repair the lock cylinder. 3. Replace the housing. 4. Replace the sector. 5. Replace the rack.
Lock System Will Not Lock	1. Lock bolt spring is broken. 2. Damaged sector tooth. 3. Faulty lock cylinder. 4. Damaged housing. 5. Damaged rack. 6. Interference between the bowl and coupling. 7. Ignition switch stuck. 8. Actuator rod restricted or bent. 9. Transmission linkage adjustment is incorrect.	1. Replace the spring. 2. Replace the sector tooth. 3. Replace the lock cylinder. 4. Replace the housing. 5. Replace the rack. 6. Adjust or replace. 7. Adjust or replace. 8. Adjust or replace. 9. Adjust.
Lock System—High Lock Effort	1. Lock cylinder is faulty. 2. Ignition switch is faulty. 3. Rack preload spring is broken or weak. 4. Burrs on the sector, rack, housing, support, tang of the shift gate or actuator rod coupling. 5. Bent sector shaft. 6. Distorted rack. 7. Misalignment of the housing to the cover (tilt only). 8. Distorted coupling slot in the rack (tilt only). 9. Bent or restricted actuator rod. 10. Ignition switch mounting bracket is bent.	1. Replace the lock cylinder. 2. Replace the ignition switch. 3. Replace the spring. 4. Remove the burrs. 5. Replace the shaft. 6. Replace the rack. 7. Replace either or both. 8. Replace the rack. 9. Straighten or replace the rod. 10. Straighten or replace the bracket.
Lock Cylinder—High Effort Between The "Off" and "Off-Lock" Positions	1. Burr on tang of shift gate. 2. Distorted rack.	1. Remove the burr. 2. Replace the rack.
Sticks In "Start" Position	1. Actuator rod is deformed. 2. Any high effort condition.	1. Straighten or replace the rod. 2. See "correction" under the high effort diagnosis.
Key Cannot Be Removed In The "Off-Lock" Position	1. Ignition switch is not set correctly. 2. Faulty lock cylinder.	1. Adjust ignition switch. 2. Replace the lock cylinder.
The Lock Cylinder Can Be Removed Without Depressing The Retainer	1. Faulty retainer. 2. Burr over the retainer slot in the housing cover.	1. Replace the lock cylinder. 2. Remove the burr.
Lock Bolt Hits The Shaft Lock In The "Off" And "Park" Positions	Ignition switch is not set correctly.	Adjust the ignition switch.

GMTB-4013-A

DIAGNOSIS (CONT.)

PROBLEM	POSSIBLE CAUSE	CORRECTION
Noise In The Column	1. Flexible coupling pulled apart. 2. Column not correctly aligned. 3. One click in Off-Unlock position and when the steering wheel is moved. 4. Horn contact ring not lubricated. 5. Lack of grease on the bearings or bearing surface. 6. Lower shaft bearing is tight or frozen. 7. Upper shaft bearing is tight or frozen. 8. Lock plate retaining ring is not seated. 9. Steering shaft snap ring is not seated. 10. Shroud or housing is loose. 11. Sheared intermediate shaft plastic joint.	1. Align the column and replace the flexible coupling. 2. Align the column. 3. Normal seating of the lock bolt. 4. Lubricate. 5. Lubricate the bearings. 6. Replace the bearing. Inspect the shaft and replace if scored. 7. Replace the housing assembly. 8. Replace the retaining ring. Inspect for proper seating in the groove. 9. Replace the snap ring. Inspect for proper seating in the groove. 10. Tighten mounting screws. 11. Repair or replace the steering shaft. Align the column.
High Steering Shaft Effort	1. Column assembly is misaligned in the vehicle. 2. Tight or frozen upper or lower bearings. 3. Binding intermediate shaft U-joints.	1. Align correctly. 2. Replace the bearings. 3. Repair or replace the intermediate shaft.
High Shift Effort	1. Column assembly is misaligned in the vehicle. 2. Lower bowl bearing is not aligned correctly. 3. Lack of grease on the bearing or seal areas. 4. Shift tube is bent or broken.	1. Align correctly. 2. Align correctly. 3. Lubricate bearings and seals. 4. Replace the shift tubes.
Improper Transmission Shifter	1. Sheared shift tube joint. 2. Improper transmission linkage adjustment. 3. Loose lower shift lever. 4. Sheared lower shift lever weld.	1. Replace the shift tube assembly. 2. Adjust the linkage. 3. Replace the shift tube assembly. 4. Replace the shift tube assembly.
Lash In Mounted Column Assembly	1. Column mounting bracket bolts loose. 2. Broken weld nuts on the jacket. 3. Column bracket capsule sheared. 4. Loose shoes in the housing (tilt only). 5. Loose tilt head pivot pins (tilt only).	1. Tighten to specifications. 2. Replace the jacket assembly. 3. Replace the bracket assembly. 4. Replace the shoes. 5. Replace the pivot pins.
Driver Can Lock Steering In The Second Gear (Manual Transmission Columns)	1. Faulty upper shift lever. 2. Faulty shift lever gate. 3. Loose relay lever on the shift tube.	1. Replace the shift lever. 2. Replace the shift lever gate. 3. Replace the shift tube assembly.
Excessive Play In The Mounted Steering Column Assembly (Tilt Column)	1. Column mounting bracket bolts loose. 2. Loose support screws. 3. Loose tilt head pivot pins. 4. Loose lock shoe pin in the support.	1. Tighten to specifications. 2. Tighten to specifications. 3. Replace the pivot pins. 4. Replace the pin.

GMTB-4014-A

DIAGNOSIS (CONT.)

PROBLEM	POSSIBLE CAUSE	CORRECTION
Housing Loose (Tilt Column)	1. Excessive clearance between the holes in the support or the housing and pivot pin diameter. 2. Faulty anti-lash spring in the centering spheres. 3. Upper bearing not seating in the bearing race. 4. Upper bearing inner race seat missing. 5. Bearing preload spring broken. 6. Loose support screws.	1. Replace either or both. 2. Replace the spring. 3. Replace both. 4. Install the seat. 5. Replace preload spring. 6. Tighten to specifications.
Housing Scraping On The Bowl (Tilt Column)	Bowl bent or not concentric with the hub.	Replace the bowl.
Steering Wheel Loose Every Other Tilt Position (Tilt Column)	Loose fit between the lock shoe and pivot pin.	Replace both.
Steering Column Will Not Lock In Any Tilt Position (Tilt Column)	1. Lock shoe grooves may have burrs or dirt. 2. Lock shoe spring is weak or broken. 3. Lock shoe seized on its pivot pin.	1. Replace lock shoes and clean the grooves. 2. Replace the spring. 3. Replace both lock shoes.
Noise When Tilting The Column (Tilt Column)	1. Tilt spring rubbing in the housing. 2. Tilt bumpers are worn.	1. Lubricate. 2. Replace the tilt bumpers.
Steering Wheel Fails To Return To The Top Tilt Position (Tilt Column)	1. Pivot pins are bound up. 2. Wheel tilt spring is faulty. 3. The turn signal switch wires are too tight.	1. Replace the pivot pins. 2. Replace the spring. 3. Reposition the wires.
Dimmer Switch Will Not Function	1. Loose connector at the dimmer switch. 2. Improper adjustment. 3. Internally damaged or worn switch.	1. Tighten or replace. 2. Readjust. 3. Replace.
Turn Signal Will Not Cancel	1. Loose switch mounting screws. 2. Switch or anchor bosses broken. 3. Broken, missing or out of position detent, return or cancelling spring. 4. Uneven or incorrect cancelling cam to cancelling spring interference.	1. Tighten screws to 2.8 N.m (25 in. lbs.). 2. Replace the switch. 3. Reposition or replace the springs as required. 4. Adjust the switch position. • If the interference is correct and switch will still not cancel, replace the switch. • If the interference cannot be corrected by the switch adjustment, replace the cancelling cam.
Turn Signal Difficult To Operate	1. Actuator rod loose. 2. Yoke broken or distorted. 3. Loose or misplaced springs. 4. Foreign parts and/or materials. 5. Switch mounted loosely.	1. Tighten mounting screw to 1.4 N.m (12 in. lbs.). 2. Replace the switch. 3. Reposition or replace the springs. 4. Remove the foreign parts and/or material. 5. Tighten mounting screws to 2.8 (25 in. lbs.).

GMTB-4015-A

DIAGNOSIS (CONT.)

PROBLEM	POSSIBLE CAUSE	CORRECTION
Turn Signal Will Not Indicate Lane Change	1. Broken lane change pressure pad or spring hanger. 2. Broken, missing or misplaced lane change spring. 3. Jammed base or wires.	1. Replace the switch. 2. Replace or reposition as required. 3. Loosen mounting screws, reposition base or wires and tighten the screws to 2.8 N.m (25 in. lbs.).
Turn Signal Will Not Stay In Turn Position	1. Foreign material or loose parts impending movement of the yoke. 2. Broken or missing detent or cancelling springs. 3. None of the above.	1. Remove material and/or parts. 2. Replace the spring. 3. Replace the switch.
Hazard Switch Cannot Be Turned Off	Foreign material between hazard support cancelling leg and yoke.	Remove the foreign material. • No foreign material. Replace the turn signal switch.
Hazard Switch Will Not Stay On Or Difficult To Turn Off	1. Loose switch, mounting screws. 2. Interference with other components. 3. Foreign material. 4. None of the above.	1. Tighten mounting screws to 2.8 N.m (25 in. lbs.). 2. Remove the interference. 3. Remove the foreign material. 4. Replace the switch.
No Turn Signal Lights	1. Faulty or blown fuse. 2. Inoperative turn signal flasher. 3. Loose chassis to column connector. 4. Disconnect column to chassis connector. Connect new switch to chassis and operate switch by hand. If vehicle lights now operate normally, signal switch is inoperative. 5. If vehicle lights do not operate, check chassis wiring for opens, grounds, etc.	1. Replace fuse and check operation. 2. Replace the turn signal flasher. 3. Connect securely, check operation. 4. Replace the signal switch. 5. Repair the chassis wiring.
Turn Indicator Lights On, But Not Flashing	1. Inoperative turn flasher. 2. Loose chassis to column connection. 3. Inoperative turn signal switch. 4. To determine if turn signal switch is faulty, substitute a new switch into the circuit and operate the switch by hand. If the vehicle's lights operate normally, the signal switch is inoperative. 5. If the vehicle's lights do not operate, check light sockets for high resistance connections, the chassis wiring for opens, grounds, etc.	1. Replace the turn flasher. 2. Connect securely and check operation. 3. Replace the turn signal switch. 4. Replace the signal switch. 5. Repair the chassis wiring.

GMTB-4016-A

DIAGNOSIS (CONT.)

PROBLEM	POSSIBLE CAUSE	CORRECTION
Front Or Rear Turn Signal Lights Are Not Flashing	1. Burned out fuse. 2. Burned out or damaged turn signal bulb. 3. High resistance connection to ground at the bulb socket. 4. Loose chassis to column connector. 5. Disconnect column to the chassis connector. Connect a new switch into the system and operate the switch by hand. If turn signal lights are now on and flash, the turn signal switch is inoperative. 6. If vehicle lights do not operate, check the chassis wiring harness to light sockets for opens, grounds, etc.	1. Replace fuse and check operation. 2. Replace the bulb. 3. Remove or repair the faulty connection and check operation. 4. Connect securely and check operation. 5. Replace the turn signal switch. 6. Repair the chassis wiring.
Stop Light Not On When Turn Indicated	1. Burned out fuse. 2. Loose column to chassis connection. 3. Disconnect column to chassis connector. Connect new switch into system without removing old. Operate switch by hand. if brake lights work with switch in the turn position, signal switch is faulty. 4. If brake lights do not work, check connector to stop light, the sockets for grounds, opens, etc.	1. Replace fuse and check operation. 2. Connect securely and check operation. 3. Replace the signal switch. 4. Repair connector to stop lights circuits.
Turn Indicator Panel Lights Not Flashing	1. Burned out bulbs. 2. High resistance to ground at the bulb socket. 3. Opens, grounds in wiring harness from the front turn signal bulb socket to the indicator lights.	1. Replace the bulbs. 2. Replace the socket. 3. Locate and repair as required.
Turn Signal Lights Flash Very Slowly	1. Inoperative turn signal flasher. 2. System charging voltage low. 3. High resistance ground at light sockets. 4. Loose chassis to column connection. 5. Disconnect column to chassis connector. Connect new switch into system without removing old. Operate switch by hand. If flashing occurs at normal rate, the signal switch is faulty. 6. If the flashing rate is still extremely slow, check chassis wiring harness from the connector to the light sockets for high resistance.	1. Replace the turn signal flasher. 2. Increase voltage to specifications. Refer to (SEC. 6D ENGINE ELECTRICAL) in this manual. 3. Repair high resistance grounds at the light sockets. 4. Connect securely and check operation. 5. Replace signal switch. 6. Locate and repair as required. Refer to SEC. 8B (CHASSIS ELECTRICAL) in this manual.

GMTB-4017-A

DIAGNOSIS (CONT.)

PROBLEM	POSSIBLE CAUSE	CORRECTION
Hazard Signal Lights Will Not Flash—Turn Signal Functions Normally	1. Blown fuse.	1. Replace fuse and check operation.
	2. Inoperative hazard warning flasher.	2. Replace the hazard warning flasher.
	3. Loose chassis to column connection.	3. Connect securely and check operation.
	4. Disconnect column to chassis connector. Connect new switch into system without removing old. Depress the hazard warning button and observe the hazard warning lights. If they now work normally, the turn signal switch is faulty.	4. Replace the turn signal switch.
	5. If the lights do not flash, check wiring harness "K" lead (brown) for open between hazard flasher and harmonica connector. If open, fuse block is faulty.	5. Replace fuse block. Refer to SEC. 8B (CHASSIS ELECTRICAL) in this manual.
Tone Alarm Does Not Sound With Key Fully Inserted In Lock Cylinder With Driver's Door Open	1. Loose connection at the tone alarm.	1. Connect securely.
	2. Voltage not available to the tone alarm.	2. Check the continuity of the chassis wiring and repair as required.
	3. Faulty tone alarm.	3. Replace the tone alarm.
	4. Door jamb switch on the driver's side is maladjusted or inoperative.	4. Adjust or replace as required.
	5. Short in the chassis wiring.	5. Check by separating chassis to column connector. Connect E and F female contacts on the chassis side (bent paper clip will work). If tone alarm sounds, continue diagnosis. If not, locate and repair chassis wiring.
	6. Short or fault in the signal switch wiring.	6. Connect male E and F contacts of connector with the jumper. Check buzzer switch pads with the ohmmeter. If contact is made, function is normal. If not, replace the signal switch.
	7. Chips, burrs, foreign material is preventing actuator tip function. NOTICE: Key must be removed or the cylinder in the "run" position before removing the lock cylinder.	7. Remove chips and burrs. Reassemble and check.
	8. Faulty lock cylinder.	8. With the lock cylinder out (refer to "Notice" under step 7), fully insert and remove the key. The actuator should extend and retract smoothly. Total expansion of tip should be 1.25 mm (0.050 inch). If not, replace the lock cylinder.
	9. Chips, foreign material affecting the tone alarm switch operation.	9. Remove and clean as required—reassemble and check.
	10. Damaged or broken tone alarm switch.	10. Replace the tone alarm switch.

GMTB-4018-A

DIAGNOSIS (CONT.)

PROBLEM	POSSIBLE CAUSE	CORRECTION
Tone Alarm Does Not Sound With Key Fully Inserted In Lock Cylinder With Driver's Door Open (Cont.)	11. Inoperative tone alarm switch (switch appears good but will not make the tone alarm switch function check). 12. Tone alarm switch contact gap is too large. 13. If the tone alarm fault has not yet been detected, connect a continuity meter (or light) to the male E and F connector contacts. Insert the key the full depth into the lock cylinder. If contact is made with the key in, and is not made with it out, the function is normal. Retrace the initial diagnostic steps. If contact is not established, the fault is in the column. 14. If the fault has not yet been isolated and repaired, connect ohmmeter to the tone alarm switch probes. Fully insert and remove the key from the lock cylinder. If contact is made with the key in, and is broken with it out, the function is normal. Retrace the diagnostic steps. If contact is not made, the fault is in the lock cylinder or tone alarm switch.	11. Connect the ohmmeter leads to the tone alarm switch probes. Press on the actuator pad until the interior points contact. If contact is not made, replace the tone alarm switch. 12. Reset the contact gap. 13. With the fault isolated in the column, disassemble the upper end of the column until the signal switch mounting screws have been removed. Lift the switch and check the probes of the tone alarm switch to ensure good contact with the pads in the signal switch. Bend the probes, if required, then reseat the signal switch and install the three screws. Check the function. 14. Setting the contact gap. Press a 0.75 mm (0.030 inch) wire type spark plug gap wire with flat piece of stock on the actuator pad. If contact is not made, adjust switch until positive contact is made (use ohmmeter). With positive contact at 0.75 mm (0.030 inch) use a 0.65 mm (0.025 inch) plug gap wire beneath the flat stock. No contact should occur. Adjust. When the switch will make contact with the 0.75 mm (0.030 inch) wire and not with the 0.65 mm (0.025 inch) wire, the tone alarm switch is set at the low limit.
Tone Alarm Continues To Operate With Key In The Lock Cylinder With The Driver's Door Either Opened Or Closed And Ceases When Key Is Removed	1. Door jamb switch on driver's side maladjusted or inoperative. 2. Wire from signal switch to door jamb switch shorted.	1. Adjust or replace as required. 2. If on signal switch side, replace signal switch. If on chassis side, find and repair.This condition indicates the lock cylinder or tone alarm switch is at fault. To verify, check for continuity at the E and F male connector contacts with the key removed from the cylinder. If continuity exists, the fault is in the column.
Tone Alarm Continues To Operate With Key Out, But Stops When Driver's Door Is Closed	1. Lock cylinder binding (turn lock toward start position. If tone alarm stops in the run position or when turned past run run towards the start, the problem is a sticky lock cylinder actuator). 2. Chips, foreign material in lock cylinder bore. 3. Sticky lock cylinder actuator tip. 4. Damaged or broken tone alarm switch. 5. Tone alarm switch contact gap is too close.	1. Replace the lock cylinder. 2. Remove, assemble and recheck function. 3. Replace the lock cylinder. 4. Replace the tone alarm switch. 5. Adjust as specified.

GMTB-4019-A

ON-VEHICLE SERVICE

INSPECTION

SHIFTER SHAFT

Separation of the shifter shaft sections will be internal and cannot be visually identified. Hold the lower end of the shifter shaft and move the shift lever on the column through its ranges and up and down. If thre is little or no movement of the shifter shaft, the plastic joints are sheared.

STEERING SHAFT

If the steering shaft plastic pins have been sheared, the shaft will rattle when struck lightly from the side and some lash may be felt when rotating the steering wheel while holding the flexible coupling. If the steering shaft pins are sheared due to minor collision without serious damage to other components, the vehicle can be safely steered; however, steering shaft replacement is recommended.

COLUMN JACKET

Inspect the jacket section of the column for looseness, and or/bends.

COLUMN SUPPORT BRACKET

Damage in this area will be indicated by separation of the mounting capsules from the bracket. The bracket will have moved forward toward the entire compartment and will usually reuslt in collapsing of the jacket section of the steering column.

STEERING COLUMN FOR ACCIDENT DAMAGE

NOTICE: Vehicles involved in accidents resulting in frame damage, major body or sheet metal damage, or where the steering column has been impacted may also have a damaged or misaligned steering column.

Inspect (Figures 1 through 3)

1. Capsules on the steering column bracket assembly. The capsules must be within 1.59 mm (1/16 inch) from the bottom of the slots (figure 1). If not, the bracket should be replaced.
2. Contact surface (figure 1). The bolthead must not contact surface "B" or the shear load will be increased. If contact is made, replace the bracket.
3. Shift lever operation on vehicles with automatic transmission and column shift. If the shift lever is able to move to the "Park" position without raising the lever, the upper shift tube plastic bearing is broken.
4. Jacket collapse. Measure the jacket collapse dimensions, depending on the vehicle and steering column, in the following ways (figure 2).
   - Measure from the end of the bearing assembly to the lower edge of the upper jacket (C).

   If the jacket dimensions are not within specifications, a new jacket must be installed.
- Visually inspect for sheared injected plastic in the shift tube and the steering shaft (figure 3). If either one or both are sheared, replace with new parts.

5. Any frame damage that could cause a bent steering shaft must have the steering shaft runout checked in the following manner:
   - Remove intermediate shaft.
   - Hold a ruler against the lower end of steering shaft and have an assistant turn the steering wheel.
   - The runout must not exceed 1.59 mm (1/16 inch). A dial indicator may be used instead of a ruler.

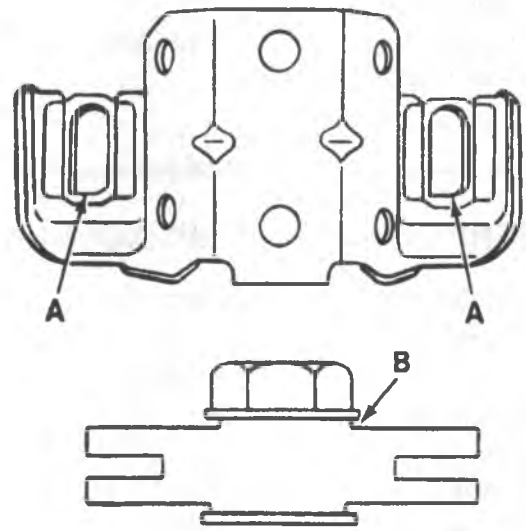

A. Capsules must be within 1.59 mm (1/16") from bottom of slots. If not, replace bracket assembly.
B. The bolt head must not contact surface "B." If contact is made, the capsule shear load will be increased—Replace bracket.

B7380

Figure 1 – Steering Column Collapse Inspection

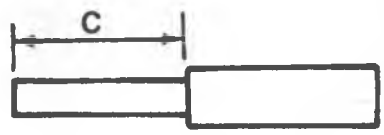

C. 346.7 mm (13.64 inches) R V MODEL (Tilt Column)

V0026

Figure 2 – Steering Column Collapse Inspection

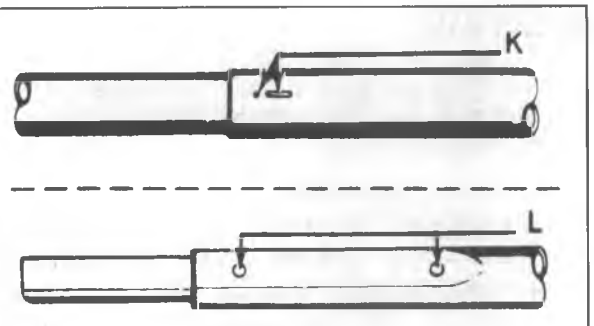

K. Inspect for sheared injected plastic in the shift tube.
L. Inspect for sheared injected plastic in the steering shaft.

B7382

Figure 3—Steering Column Collapse Inspection

STEERING WHEEL REPLACEMENT

Remove or Disconnect (Figure 4)

Tool Required:

J 1859-03 Steering Wheel Puller

1. Negative battery cable.
2. Horn button cap.
3. Retainer and steering wheel nut.
4. Horn lead assembly (some models).

- Mark the relationship of the steering wheel to the steering shaft.

5. Steering wheel. Use J 1859-03 (figure 4). Do not hammer on the puller, or damage could result to the steering column.

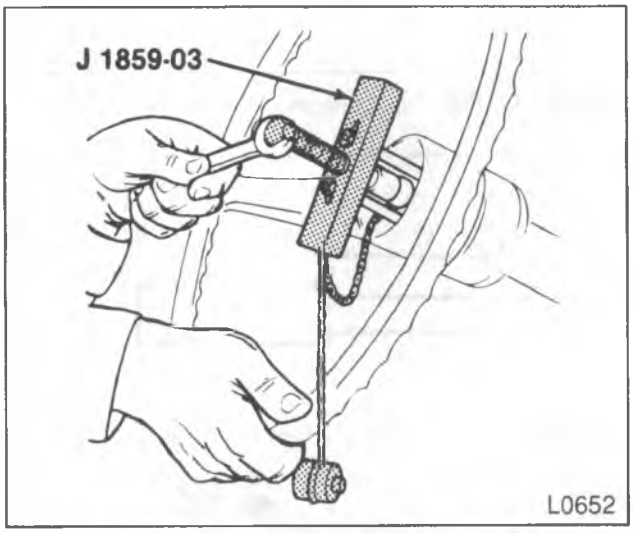

Figure 4—Steering Wheel Removal

Install or Connect (Figure 5)

- The turn signal control assembly must be in the neutral position when assembling the steering wheel.

1. Steering wheel onto the steering shaft. Align the marks made at removal.

Important

- Do not misalign the steering wheel more than 25.4 mm (1-inch) from the horizontal centerline (figure 5).

2. Horn lead assembly (some models).

NOTICE: See "Notice" on page 3F2-1 of this section.

3. Steering wheel nut.

Tighten

- Nut to 40 N•m (30 ft. lbs.).

4. Retainer.
5. Horn button cap.
6. Negative battery cable.

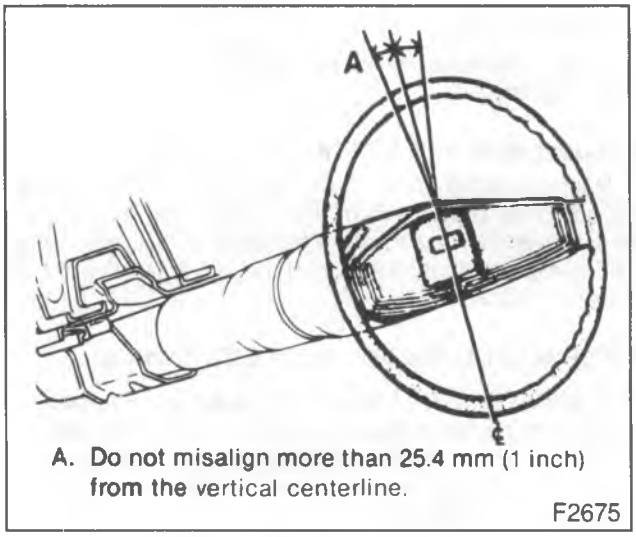

A. Do not misalign more than 25.4 mm (1 inch) from the vertical centerline.

Figure 5—Steering Wheel Alignment

INTERMEDIATE SHAFT REPLACEMENT (R/V MODELS)

Remove or Disconnect

- Set front wheels in the straight-ahead position.
- Mark the intermediate shaft to steering shaft and the flexible coupling to steering gear wormshaft relationships to be sure of proper installation.

1. Pinch bolt at flexible coupling.
2. Bolt and nut at pot coupling.
3. Intermediate shaft assembly by sliding shaft up (towards dash) to get flexible coupling to clear steering gear wormshaft. Then slide shaft down off upper steering shaft. This may require the use of a small hammer tapping on the pot coupling to free it from the shaft.

Install or Connect

1. Upper end of intermediate shaft onto upper steering shaft. Align marks made at removal.

2. Lower end of intermediate shaft onto steering gear wormshaft.

NOTICE: See "Notice" on page 3F2-1 of this section.

3. Pinch bolt at flexible coupling and bolt and nut at pot coupling.

Tighten

- Pinch bolt to 102 N•m (75 ft. lbs.).
- Bolt and nut to 88 N•m (65 ft. lbs.).

FLEXIBLE COUPLING REPLACEMENT (R/V AND P MODELS; MOTORHOME)

Remove or Disconnect (Figure 6)

1. Intermediate shaft. Refer to "Intermediate Shaft Replacement" in this section.

- Clamp shaft in vise.

2. Coupling to flange nuts and washers (2).

Install or Connect (Figure 6)

1. Coupling onto flange.

NOTICE: See "Notice" on page 3F2-1 of this section.

2. Nuts and washers (2).

Tighten

- Nuts (2) to 27 N•m (20 ft. lbs.).

3. Intermediate shaft. Refer to "Intermediate Shaft Replacement" in this section.

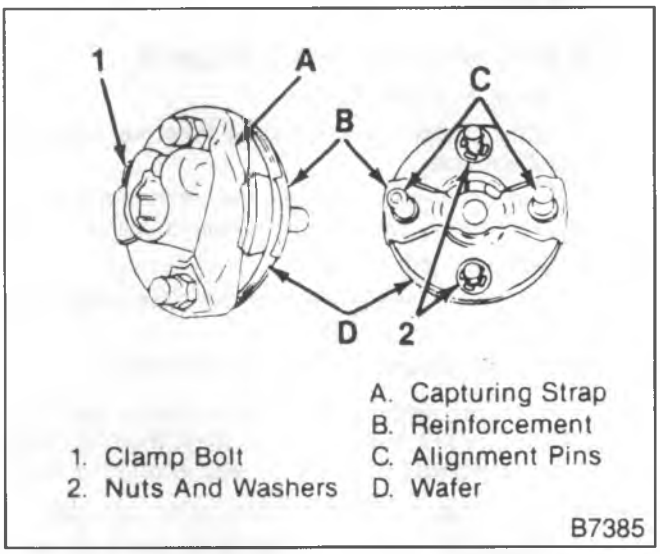

Figure 6 – Flexible Type Steering Coupling

POT COUPLING REPLACEMENT

Remove or Disconnect (Figure 7)

1. Intermediate shaft. Refer to "Intermediate Shaft Replacement" in this section.

- Clamp shaft in vise.

2. Retainer clip (94).
3. Coupling (93).
4. Washer (97).
5. Bearings (95) and spring (96).

- Remove shaft from vise.

6. Pin (98).

- Using a socket large enough to accept the pin, begin removing pin using a press. Once the pin is flush with the bushing (102), use a bolt with a diameter smaller than the pin itself to complete removal of the pin.

7. Clamp (101).
8. Seal (99).

Clean

- Clean all parts for inspection.

Inspect

- Inspect all parts for wear and replace as required. The bushing (102) is only serviceable with the shaft. All other parts are serviced separately.

Install or Connect (Figure 7)

1. Clamp (101) onto seal (99).
2. Seal (99) onto shaft (100).
3. Bushing (102).
4. Pin (98) using press. Be sure pin extends from either side of shaft an equal length.

- Set seal so it butts up against bushing.

5. Washer (97) into seal (99).

- Pack bearings with an approved high-temperature grease such as GM # 1051344 or equivalent.

6. Bearings (95) and spring (96) onto pin (98).

- Pack coupling (93) with an approved high-temperature grease such as GM # 1051344 or equivalent.

7. Coupling (93).
8. Retainer clip (94).
9. Intermediate shaft. Refer to "Intermediate Shaft Replacement" in this section.

INTERMEDIATE SHAFT REPLACEMENT (P MODEL; COMMERCIAL)

Remove or Disconnect (Figure 8)

- Set front wheels in the straight-ahead position.
- Mark the upper cardon joint yoke to steering shaft and the lower yoke to steering gear wormshaft relationships.

1. Upper and lower cardon joint yoke pinch bolt.
2. Steering gear frame bolts. Lower the steering gear.

- It is not necessary to disconnect the pitman arm from the steering gear pitman shaft.

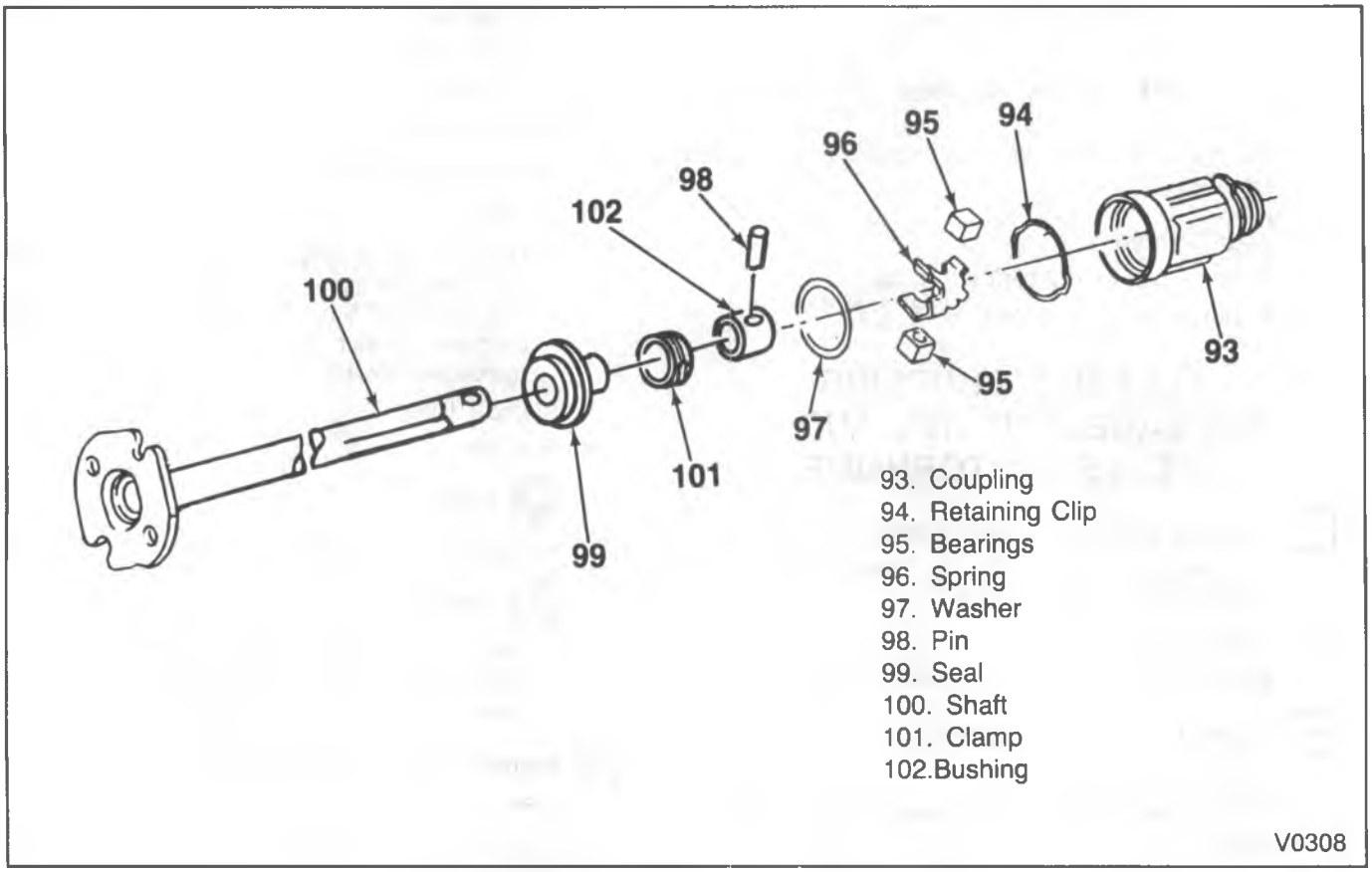

Figure 7—Intermediate Shaft Pot Coupling Components

3. Intermediate steering shaft and cardon joint assembly.

Install or Connect (Figure 8)

NOTICE: For steps 2, 3 and 4 see "Notice" on page 3F2-1 of this section.

1. Intermediate shaft lower yoke onto the steering gear wormshaft. Align the marks made at removal.
2. Pinch bolt. The pinch bolt must pass through the shaft undercut.

Tighten

- Pinch bolt to 102 N•m (75 ft. lbs.).

- Raise the steering gear into position while guiding the upper yoke assembly onto the steering shaft. The marks on the coupling and steering shaft must align.

3. Steering gear and frame bolts.

Tighten

- Bolts to 88 N•m (65 ft. lbs.).

4. Pinch bolt to the upper yoke assembly. The pinch bolt must pass through the shaft undercut.

Tighten

- Pinch bolt to 102 N•m (75 ft. lbs.).

STEERING COLUMN REPLACEMENT

R/V MODELS

Remove or Disconnect (Figure 9)

Negative battery cable.

2. Transmission control linkage from the column shift tube levers.
3. Nuts and washers (2) that secure the flanged end of the steering shaft to the flexible coupling.
4. Nuts (10) and clamp (11).
5. Steering wheel. Refer to "Steering Wheel Replacement" in this section.
6. Steering column harness at the connector.
   - Disconnect the neutral-start switch and back-up lamp switch connectors (some models). Refer to LIGHTING SYSTEMS (SEC. 8B) in this manual.
7. Transmission indicator cable (some models).
8. Screws (6), upper cover (3), lower cover (5) and seal (4).
9. Screws (7), nuts (8) and bracket (9).
10. Steering column assembly. Rotate the column so the shift lever clears the dash opening.

Install or Connect (Figure 9)

NOTICE: For steps 4, 6 and 12, see "Notice" on page 3F2-1 of this section.

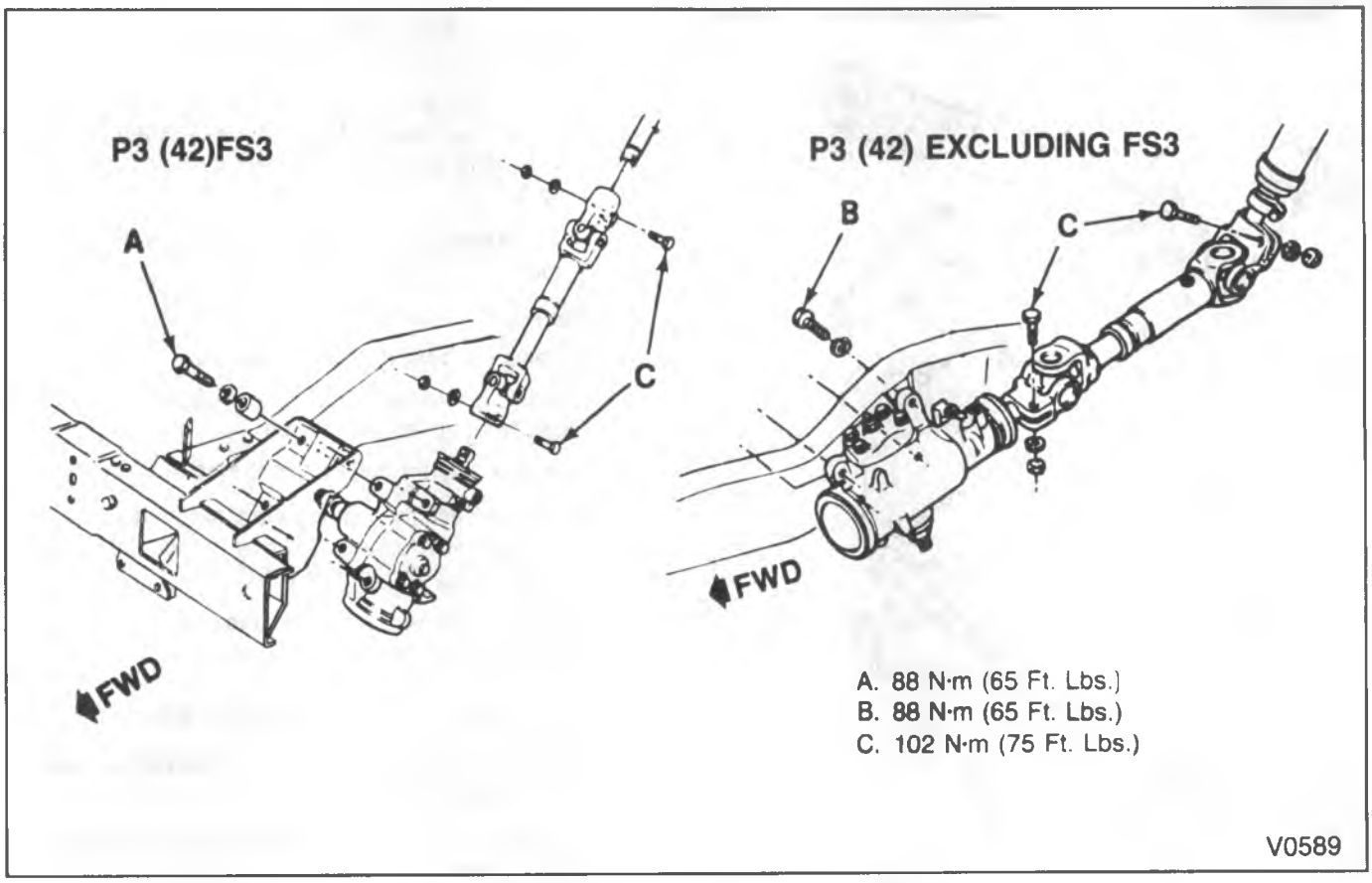

Figure 8—Intermediate Shaft Installation

1. Plastic spacers onto the flexible coupling alignment pins.
2. Lower end of the steering column through the dash opening.
3. Lower steering shaft flange onto the flexible coupling (13).
4. Flange to coupling washers and nuts (2).

Tighten

- Nuts to 27 N•m (20 ft. lbs.).

5. Screws (7) and (8) and bracket (9) loosely. Tighten screws and nuts finger tight.
6. Clamp (11) and nuts (10).

Tighten

- Nuts (10) to 24 N•m (18 ft. lbs.).
- Screws (7) and nuts (8) to 30 N•m (22 ft. lbs.)

7. Seal (4) and covers (3 and 5) to the dash.
8. Screws (6).
   - Remove plastic spacers from the flexible coupling pins.

Measure

- Flexible coupling (13) must not be distorted greater than ± 1.5 mm (0.06-inch) due to pot joint bottoming, in either direction.

9. Transmission indicator cable (some models).
10. Connectors to the steering column harness.
    - Connect the neutral-start switch and back-up lamp switch connectors (some models). Refer to LIGHTING SYSTEMS (SEC. 8B).
11. Steering wheel. Refer to "Steering Wheel Replacement" in this section.
12. Transmission control linkage.
13. Negative battery cable.

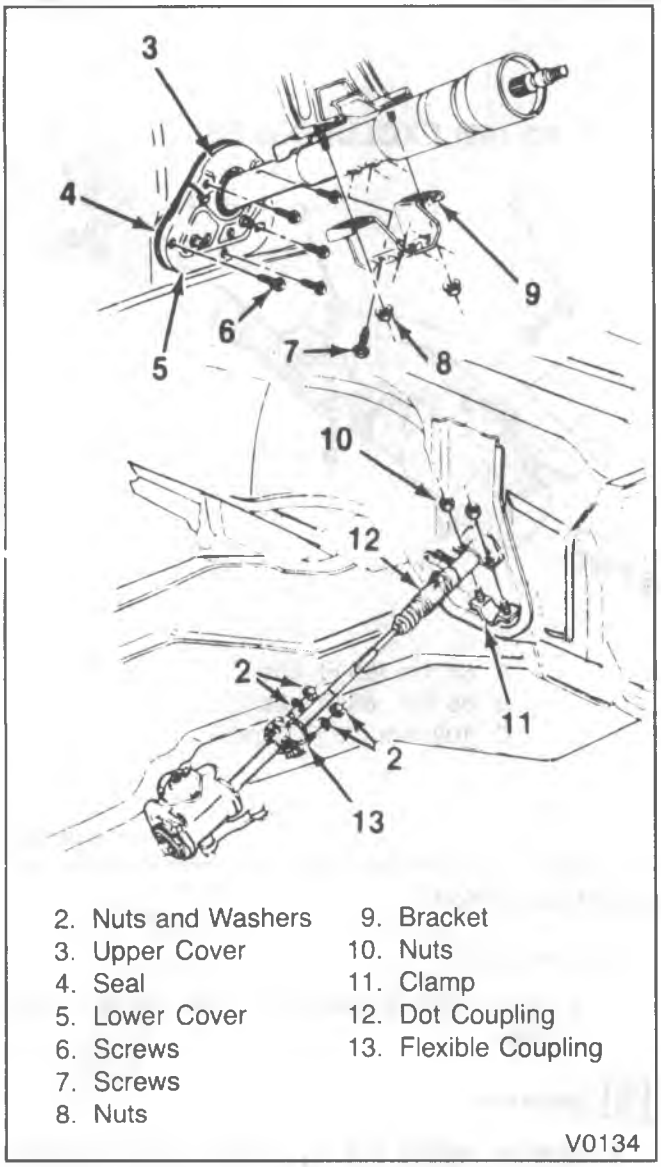

Figure 9 – Steering Column Installation (R/V Model)

P MODELS

Remove or Disconnect (Figure 10)

1. Negative battery cable.
2. Transmisison control linkage from the column shift tube levers.
3. Automatic parking brake linkage to valve assembly at the steering column (if equipped).
4. Upper cardon joint pinch bolt (14) from the intermediate shaft. Mark the relationship of the cardon joint yoke to the steering shaft (commercial models).
   - On motorhome models, remove flexible coupling pinch bolts (14).
5. Screws (7), nuts (8) and bracket (9).
6. Screws (6) from the cover and seal.
7. Steering wheel. Refer to "Steering Wheel Replacement" in this section.
8. Steering column harness at the connectors.
   - Disconnect the neutral-start switch and back-up lamp switch connectors (some models). Refer to LIGHTING SYSTEMS (SEC. 8B).
9. Steering column assembly. Rotate the column so the shift lever clears the floor opening.

Install or Connect (Figures 10 and 11)

NOTICE: For steps 3 and 5 see "Notice" on page 3F2-1 of this section.

1. Lower the end of the steering column through the floor opening.
2. Bracket (9), screws (7) and nuts (8) loosely. Tighten screws and nuts finger tight.

- Guide the steering shaft into the cardon joint yoke, lining up the marks made at removal (commercial models).
- On motorhome models, guide the steering shaft and flexible coupling onto the wormshaft of the steering gear assembly.

Tighten

- Pinch bolt to 42 N•m (31 ft. lbs.).

3. Upper cardon joint pinch bolt (14). The pinch bolt must pass through the shaft undercut (commercial models).

Tighten

- Pinch bolt to 102 N•m (75 ft. lbs.).

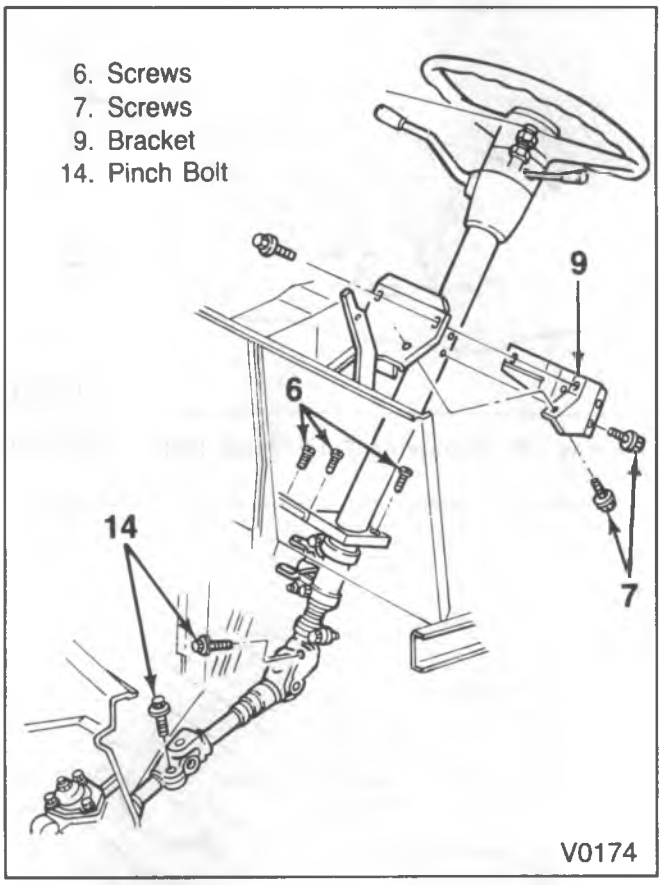

Figure 10–Steering Column Installation (P Models)

Measure (Figure 11)

- Coupling assembly dimensions. Raise or lower steering column if necessary.

Tighten

- Screws (7) and nuts (8) to 25 N•m (18 ft. lbs.).

4. Screws (6) through the cover and seal to the dash panel.
5. Connectors to the steering column harness.
   - Connect the neutral-start switch and back-up lamp switch connectors (some models). Refer to LIGHTING SYSTEMS (SEC. 8B) in this manual.
6. Steering wheel. Refer to "Steering Wheel Replacement" in this section.
7. Auto parking brake linkage to valve assembly (if equipped).
8. Transmission control linkage.
9. Negative battery cable.

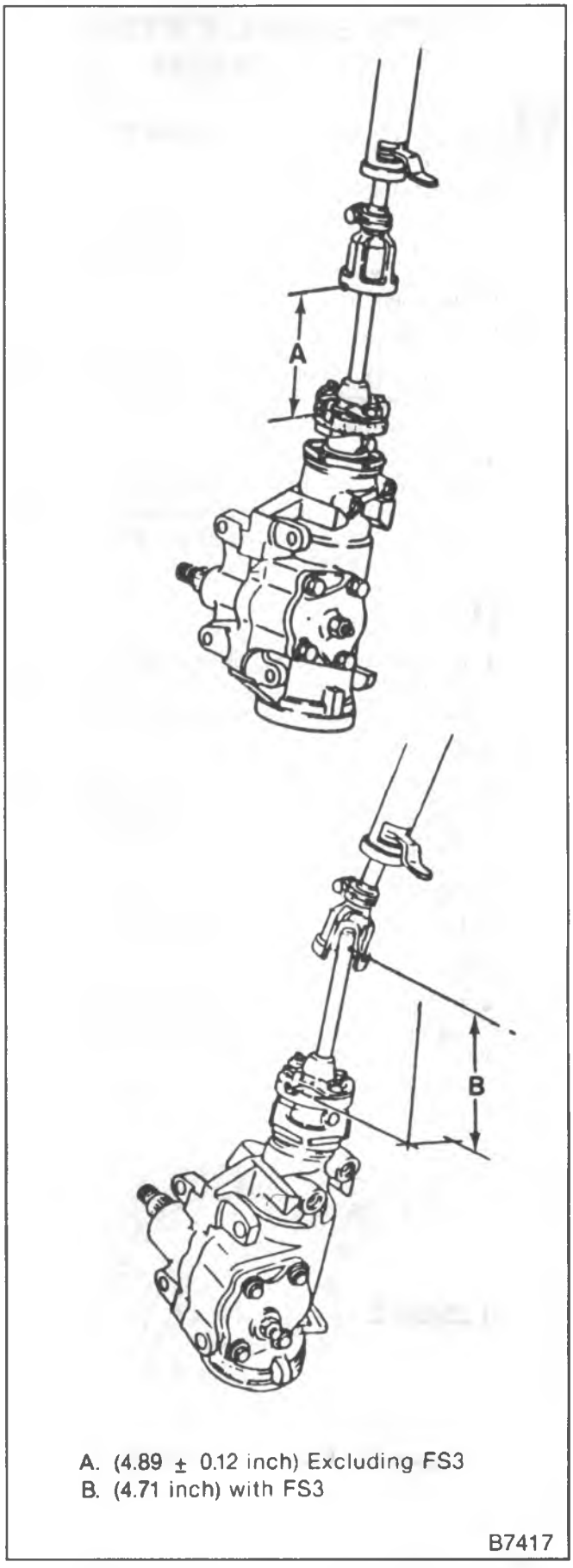

Figure 11–Coupling Assembly Measurement (P-Motorhome Models)

TURN SIGNAL SWITCH REPLACEMENT

Remove or Disconnect (Figures 12 through 15)

Tool Required:

J 23653-C Lock Plate Compressor

1. Steering wheel. Refer to "Steering Wheel Replacement" in this section.
2. Lock plate.
   - Position a screwdriver blade into the steering shaft lock plate cover slot. Pry up and out to free the cover from the lock plate.
   - Screw the center post of J-23653-C onto the steering shaft as far as it will go. Compress the lock plate by turning the center post nut clockwise. Pry the retaining ring out of the shaft (figure 12). Remove J-23653-C.

Important

- If the column is being disassembled on a bench, the shaft could slide out of the end of the mast jacket when the snap ring is removed.

3. Multi-function lever.
   - Grasp lever and pull it straight out of the column. Gently pull wire harness through opening and disconnect. See figure 14.
4. Hazard warning knob.
   - Remove retainer screw. See figure 15.
5. Turn signal mounting screws.
   - Pull the switch up and free the connector, then disconnect switch from harness (figure 13).

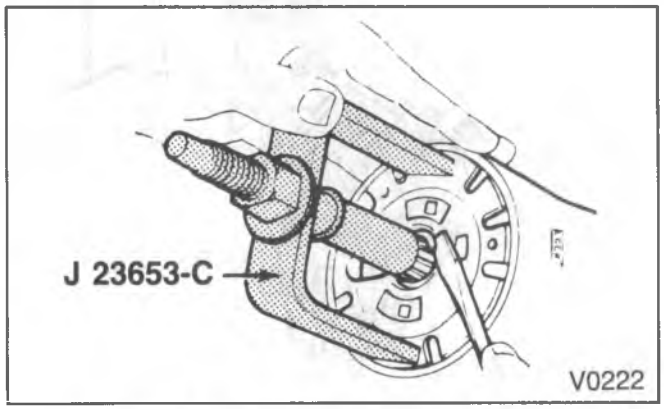

Figure 12 – Removing Retaining Ring

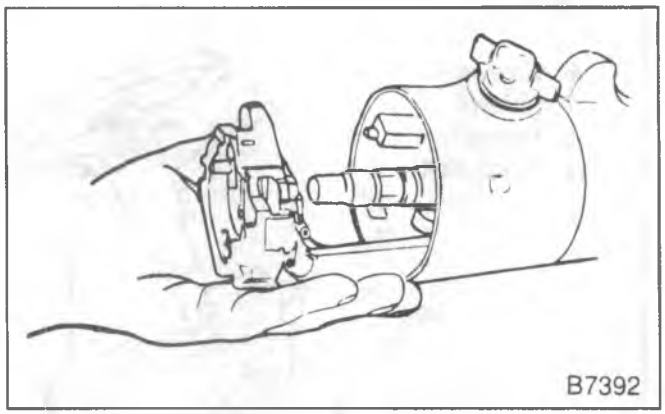

Figure 13 – Removing Turn Signal Switch Assembly

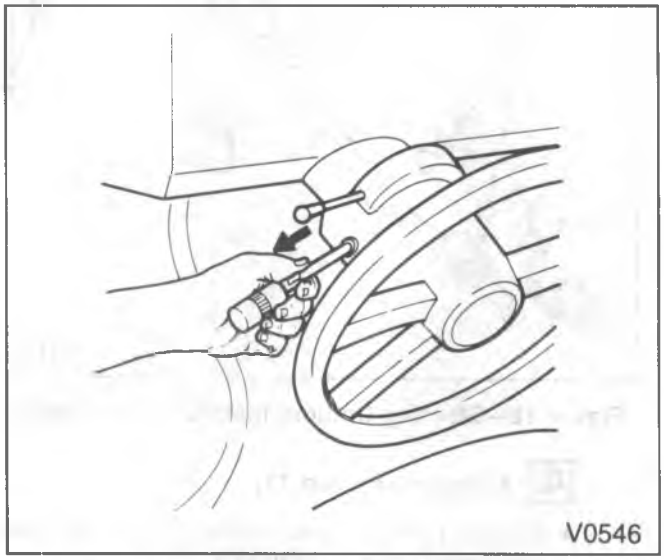

Figure 14 – Removing Multi-Function Lever

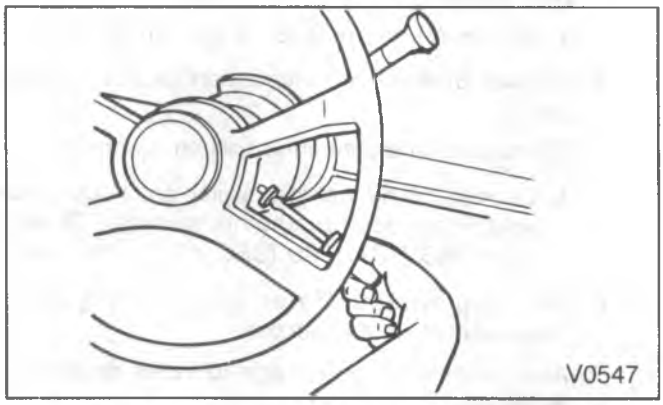

Figure 15 – Removing Hazard Warning Knob

Install or Connect (Figure 16)

Tool Required:

J 23653-C Lock Plate Compressor

Important

- Use only the specified screws, bolts and nuts at assembly. The use of over-length screws could prevent a portion of the assembly from compressing under impact.

1. Turn signal switch to harness.
   - Feed the connector and harness into the column. Make sure no wires are pinched.
2. Turn signal switch and mounting screws.
3. Hazard warning knob and screw.
4. Turn signal lever.
   - Connect harness wire and feed into column. Align notches in lever with those on pivot and snap in place.
   - Put the turn signal switch in the "Neutral" position. Pull out on the hazard warning knob.
5. Lock plate onto the end of the shaft.
   - Screw the center post of J-23653-C onto the steering shaft as far as it will go. Place a NEW retaining ring over the center post. Place the "C" bar over the center post and then compress the lock plate by turning the nut clockwise. Slide the new retaining ring down the tapered center post and into the shaft groove (figure 12). Remove J-23653-C.
6. Cover on the lock plate and snap into position.
7. Steering wheel. Refer to "Steering Wheel Replacement" in this section.

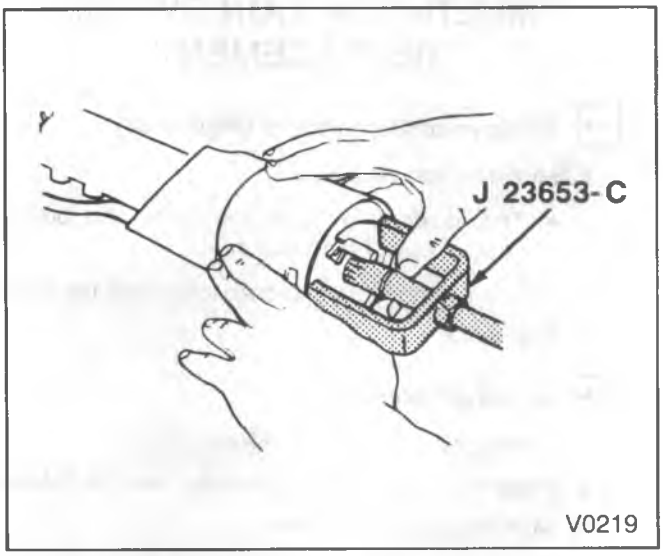

Figure 16 – Installing Retaining Ring

LOCK CYLINDER REPLACEMENT

Remove or Disconnect (Figure 17)

- Place the lock cylinder in the "Run" position.

1. Steering wheel. Refer to "Steering Wheel Replacement" in this section.
2. Turn signal switch. Refer to "Turn Signal Switch Replacement" in this section.
   - It is not necessary to completely remove the turn signal switch from the column. Pull the switch rearward far enough to slip it over the end of the shaft. Disconnecting the harness is not necessary.
3. Retaining screw and the lock cylinder set.

Important

- If the retaining screw is dropped on removal, it could fall into the column, requiring a complete disassembly to retrieve the screw.

Install or Connect (Figure 17)

1. Lock cylinder set.
   - Align the cylinder key with the keyway in the housing. Rotate as shown in figure 17.
   - Push the lock all the way in.
2. Retaining screw.

Tighten

- Screw to 2.5 N•m (22 in. lbs.).

3. Turn signal switch. Refer to "Turn Signal Switch Replacement" in this section.
4. Steering wheel. Refer to "Steering Wheel Replacement" in this section.

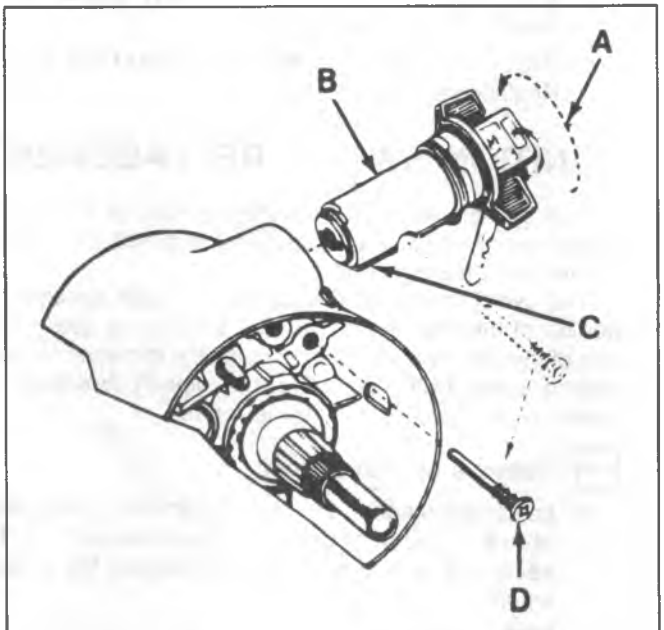

A. Hold the lock cylinder sleeve and rotate the knob clockwise against the stop.
B. Lock Cylinder Set
C. Cylinder Key
D. Lock Retaining Screw

B7394

Figure 17 – Lock Cylinder Installation

TONE ALARM SWITCH REPLACEMENT

Remove or Disconnect

1. Steering wheel. Refer to "Steering Wheel Replacement" in this section.
   - Pull the turn signal switch up far enough to allow access to the tone alarm switch. Refer to "Turn Signal Switch Replacement" in this section.
   - The tone alarm switch may be removed without removing the lock cylinder. The lock cylinder must be in the "Run" position.
2. Tone alarm switch assembly (134) (figure 19).
   - Pull the tone alarm switch straight out of the housing using a paper clip or similiar tool. A flat spring wedges the switch toward the lock cylinder.

Important

- Be careful not to let the flat spring fall down into the housing and do not pull on the switch contacts or plastic material of the switch when removing.

Install or Connect

1. Tone alarm switch to the spring clip with the formed end of the clip around the lower end of the switch. The spring is bowed away from the switch.
   - Lay the spring on the switch opposite the contacts.
2. Tone alarm switch and spring into the hole with the contacts toward the lock cylinder bore.
3. Turn signal switch. Refer to "Turn Signal Switch Replacement" in this section.
4. Steering wheel. Refer to "Steering Wheel Replacement" in this section.

IGNITION SWITCH REPLACEMENT

The ignition switch is mounted on top of the column jacket near the front of the dash, inside the channel section of the brake pedal support.

The switch is actuated by a rod and rack assembly. A portion of the rack is toothed and engages a gear on the end of the lock cylinder. This enables the rod and rack to be moved axially (with respect to the column) to actuate the switch when the lock cylinder is rotated.

Remove or Disconnect

- Lower the steering column. Refer to R/V Model or P Model "Steering Column Replacement" in this section. It is not necessary to remove the steering wheel.

Important

- Properly support the steering column if it is not removed from the vehicle.

- Put the ignition switch in the "LOCK" position.
  - If the lock cylinder was removed, the actuating rod to the switch should be pulled up until there is a definite stop, then moved down one detent, which is the "LOCK" position.

1. Two ignition switch screws.
2. Ignition switch assembly.

Install or Connect (Figure 18)

- Put the ignition switch in the "LOCK" position (figure 18).

1. Activating rod into the ignition switch.
2. Ignition switch and screws into the column.
3. Steering column assembly. Refer to "Steering Column Replacement" in this section.

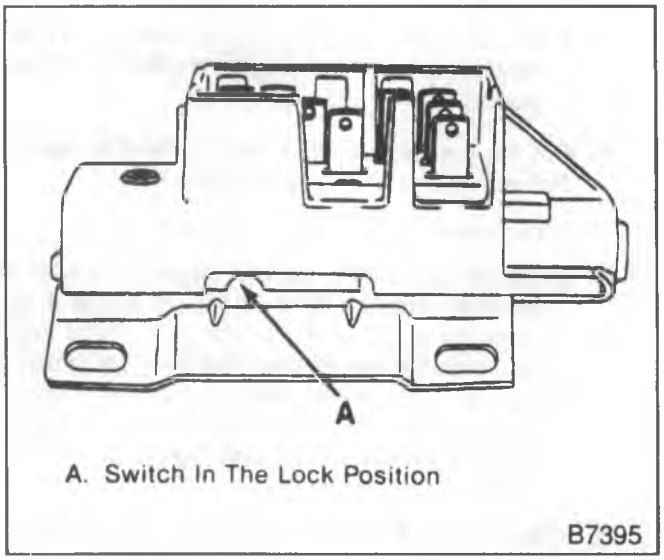

Figure 18—Ignition Switch Assembly

MULTI-FUNCTION SWITCH REPLACEMENT

Remove or Disconnect (Figure 14)

1. Multi-function switch lever.
   - This is done by grasping lever and pulling it straight out of the column.
2. Gently pull harness and connector from the column.
3. Connector.

Install or Connect

1. Connector.
2. Feed harness and the connector into the column.
3. Multi-function switch lever.
   - Align the notches in the lever with those on the pivot and snap lever into place.

UNIT REPAIR

Remove or Disconnect

- Steering column assembly. Refer to "R/V or P-Model Steering Column Replacement" in this section.

Disassemble (Figures 19 through 26)

Tools Required:

J 22635 Lock Shoe and Release Lever Pin Remover and Installer

J 21854-01 Pivot Pin Remover

J 23072 Shift Tube Remover

1. Dash panel bracket and screws from the column.
2. Clamp the steering column in a vise.
   - Clamp at the lower end of the jacket.
3. Turn signal switch (130). Refer to "Turn Signal Switch Replacement" in this section.
4. Lock cylinder (137). Refer to "Lock Cylinder Replacement" in this section.
5. Tone alarm switch (134). If it needs to be serviced, refer to "Tone Alarm Switch Replacement" in this section.

Important

- The tone alarm switch does not have to be removed to remove the upper bearing housing.

6. Ignition switch (188). Refer to "Ignition Switch Replacement" in this section.
7. Tilt release lever.
8. Shift lever pivot pin and lever.
9. Housing cover screws (133) and housing cover (138).

- Install the tilt release lever and place the column in the fully "up" position.

10. Tilt lever spring retainer (145), spring (146) and guide (147). Use a screwdriver to turn the retainer until it aligns with the grooves in the housing, then remove the retainer.
11. Pot coupling to steering shaft clamp bolt and remove the intermediate shaft and pot coupling assembly (R/V Model).
12. Upper bearing inner race (132) and seat (131). Push the upper steering shaft (168) in enough to remove the race and seat.
13. Lower bearing retainer clip (198) (column shift models).

- On floor shift models, remove retainer screws (205) and retainer (204).

14. Bearing reinforcement (197), bearing (196) and bearing adapter assembly (195) from the lower end of the mast jacket (192) (column shift models).

- On floor shift models, the bearing (203) can be removed once the retainer is removed.

15. Upper bearing housing pivot pins (156). Use J 21854-01 (figure 23).

- Install the tilt release lever and disengage the lock shoes (152 and 153).

16. Bearing housing (159) by pulling upward to extend the rack full down, then moving the housing to the left to disengage the ignition switch rack (166) from the actuator rod (167).
17. Steering shaft assembly from the upper end of the column.
18. Steering shaft (168) by removing the centering spheres (169) and the anti-lash spring (170).
19. Transmission indicator wire (column shift models).
20. Bearing housing support to housing screws (173) and remove the bearing housing support (174).
21. Ignition switch actuator rod (167).
22. Shift tube retaining ring (179) and washer (180) (column shift models).

NOTICE: When removing the shift tube, be sure to guide the lower end through the slotted opening in the mast jacket. If the tube is allowed to interfere with the jacket in any way, damage to the tube and jacket could result.

- Install J 23072 into the lock plate (181), making sure that the tool screws have good thread engagement in the lock plate. Then, turning the center screw clockwise, force the shift tube from the housing (figure 24). Remove the shift tube (transmission control lock tube on floor shift models) from the lower end of the mast jacket. Remove J 23072.

23. Lock plate (181) and washer (182).
   - Slide the lock plate (181) out of the jacket notches by tipping it down toward the housing tub and sliding it under the jacket opening.
24. Shift lever housing (184) from the mast jacket (transmission control lock tube housing on floor shift models).
25. Tilt lever opening cap (144).
26. Lock bolt spring (151). Remove the retaining screws (148) and move the spring clockwise to remove it from the bolt (figure 25).
27. Snap ring from the sector drive shaft (154).
   - With a small punch, lightly tap the drive shaft from the sector (figure 26).
28. Drive shaft (154), sector (157) and lock bolt.
29. Rack (166) and rack spring (165).
30. Tilt release lever pin (162) using J 22635 (figure 27).
31. Release lever (163) and spring (161).

Important

- To relieve the load on the release lever, hold the shoes inward and wedge a block between the top of the shoes (over slots) and bearing housing.

32. Lock shoe retaining pin (155) using J 22635.

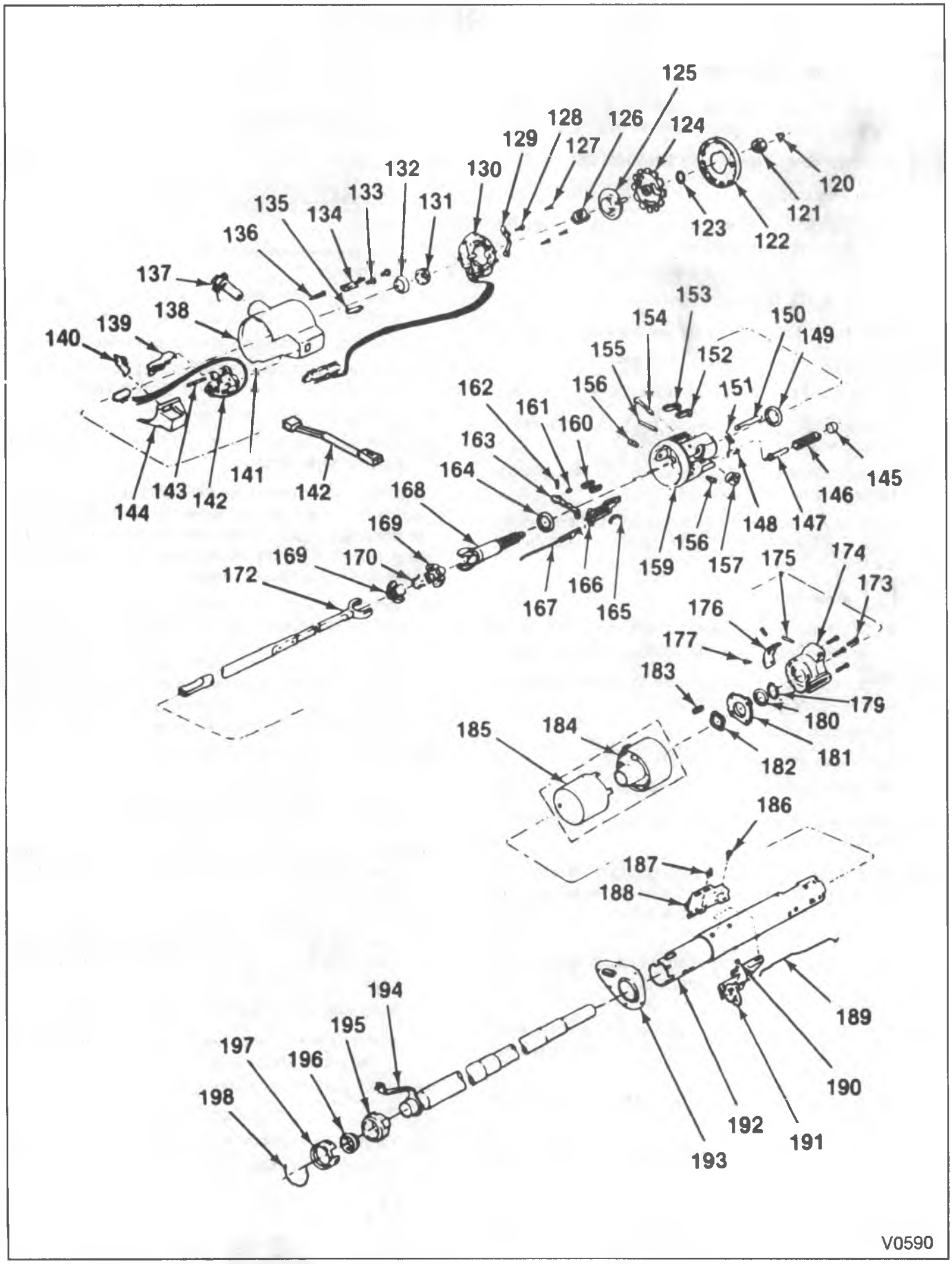

Figure 19 – Tilt Steering Column (R/V and P Models)

120. Retainer
121. Nut
122. Lock Plate Cover
123. Retainer
124. Lock Plate
125. Cancelling Cam
126. Bearing Preload Spring
127. Turn Signal Screws
128. Tap Screw
129. Actuator Arm
130. Turn Signal Switch
131. Inner Race Seat
132. Bearing Race
133. Screw
134. Tone Alarm Switch
135. Retainer Clip
136. Lock Retainer Screw
137. Ignition Lock
138. Housing Cover
139. Dimmer Switch Actuator
140. Shield
141. Pin Preload Spring
142. Pivot Switch (Wiper/Washer Switch, Also Operates Dimmer Switch
142. Multi-Function Switch (Turn Signal Lever, Cruise Control Switch)
143. Actuator Pivot Pin
144. Cap
145. Retainer
146. Tilt Spring
147. Spring Guide
148. Screw
149. Bearing
150. Lock Bolt
151. Lock Bolt Spring
152. Lock Shoe
153. Lock Shoe
154. Sector Shaft
155. Lock Shoe Pin
156. Pivot Pin
157. Actuator Sector
159. Housing Assembly
160. Shoe Release Springs
161. Spring
162. Shoe Release Lever Pin
163. Shoe Release Lever
164. Lower Bearing
165. Rack Preload Spring
166. Actuator Rack
167. Ignition Switch Actuator
168. Upper Steering Shaft
169. Centering Spheres
170. Spring
172. Lower Steering Shaft
173. Housing Support Screws
174. Housing Support
175. Pin
176. Shift Lever Gate
177. Detent Plate Screw
179. Retaining Ring
180. Washer
181. Lock Plate
182. Wave Washer
183. Gear Shift Lever Spring
184. Gear Shift Lever Bowl
185. Shroud
186. Screw
187. Stud
188. Switch
189. Dimmer Switch Rod
190. Nut
191. Dimmer Switch
192. Jacket
193. Dash Seal
194. Shift Tube
195. Adapter
196. Lower Bearing
197. Reinforcement
198. Adapter Clip

V0591

Figure 20 – Tilt Steering Column R/V & P Models

33. Lock shoes (152 and 153) and springs (160).
34. Bearings from the bearing housing only if they are to be replaced.
    - Remove the separator and balls from the bearings.
    - Place the housing on a work bench and with a pointed punch against the back surface of the race, carefully hammer the race out of the housing until a bearing puller can be used. Repeat for the other race.

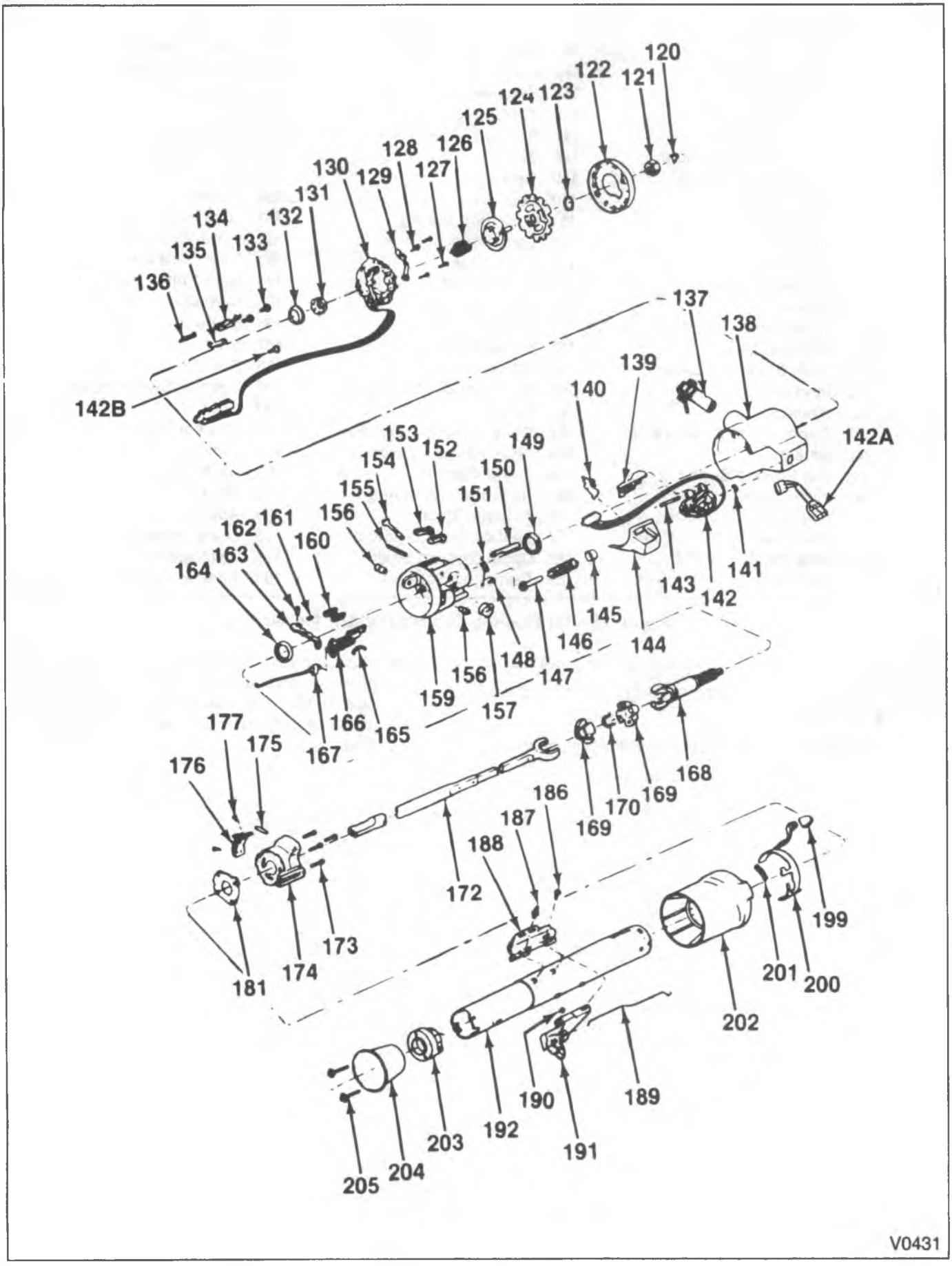

Figure 21—Tilt Steering Column—Floor Shift (R/V and P Models)

120. Retainer
121. Nut
122. Lock Plate Cover
123. Retainer
124. Lock Plate
125. Cancelling Cam
126. Bearing Preload Spring
127. Turn Signal Screws
128. Tap Screw
129. Actuator Arm
130. Turn Signal Switch
131. Inner Race Seat
132. Bearing Race
133. Screw
134. Tone Alarm Switch
135. Retainer Clip
136. Lock Retainer Screw
137. Ignition Lock
138. Housing Cover
139. Dimmer Switch Actuator
140. Shield
141. Pin Preload Spring
142. Pivot Switch
142A. Multi-Function Switch (Turn Signal Lever, Cruise Control Switch, Wiper/Washer Switch, Also Activates Dimmer Switch)
142B. Multi-Function Switch Screw
143. Actuator Pivot Pin
144. Cap
145. Retainer
146. Tilt Spring
147. Spring Guide
148. Screw
149. Bearing
150. Lock Bolt
151. Lock Bolt Spring
152. Lock Shoe
153. Lock Shoe
154. Sector Shaft
155. Lock Shoe Pin
156. Pivot Pin
157. Actuator Sector
159. Housing Assembly
160. Shoe Release Springs
161. Spring
162. Shoe Release Lever Pin
163. Shoe Release Lever
164. Lower Bearing
165. Rack Preload Spring
166. Actuator Rack
167. Ignition Switch Actuator
168. Upper Steering Shaft
169. Centering Spheres
170. Spring
172. Lower Steering Shaft
173. Housing Support Screws
174. Housing Support
175. Pin
176. Shift Lever Gate
177. Detent Plate Screw
181. Lock Plate
182. Screw
187. Stud
188. Switch
189. Dimmer Switch Rod
190. Nut
191. Dimmer Switch
199. Pad
200. Key Release Lever
201. Key Release Spring
202. Shroud
203. Lower Bearing
204. Retainer
205. Screws

V0432

Figure 22—Tilt Steering Column—Floor Shift (R/V and P Models)

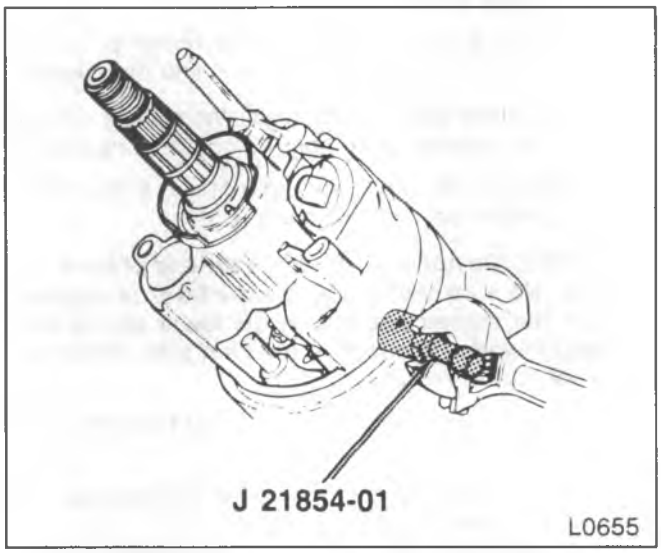

Figure 23—Removing Bearing Housing Pivot Pins

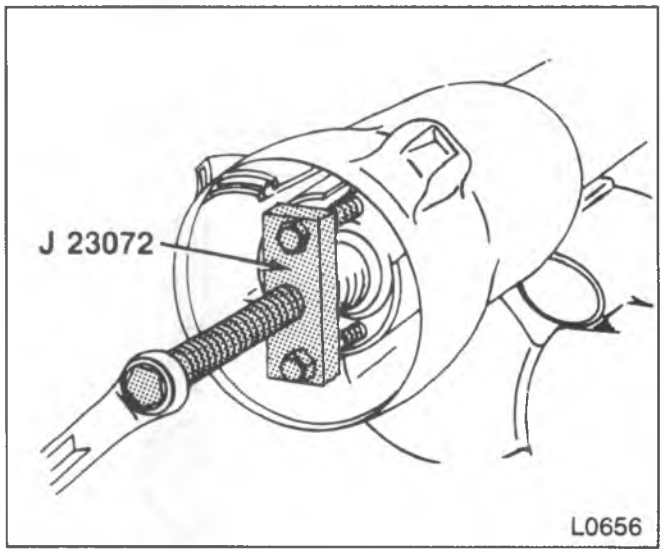

Figure 24—Removing Shift Tube

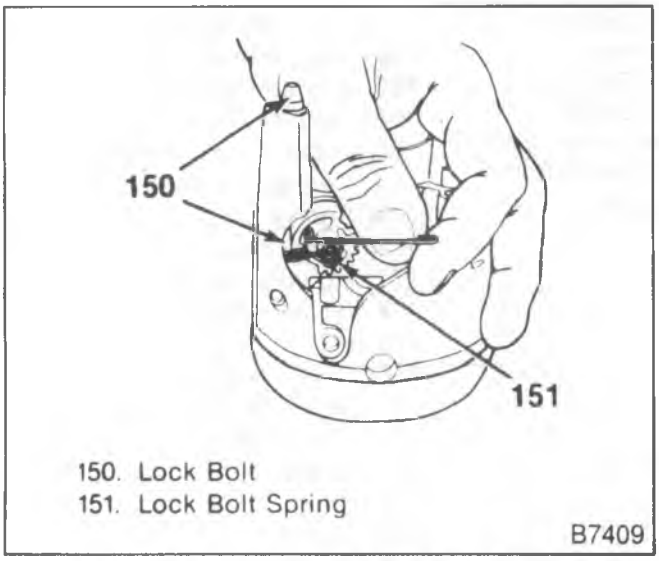

Figure 25 – Replacing Lock Bolt Spring

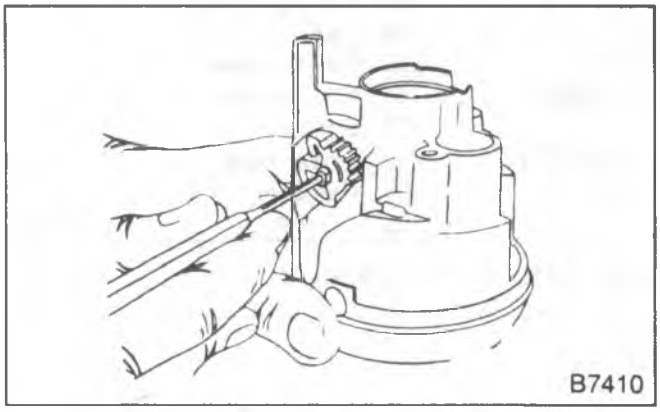

Figure 26 – Removing Sector Drive Shaft

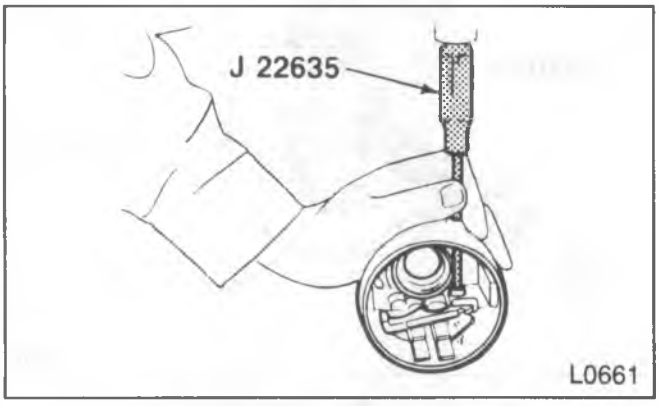

Figure 27 – Removing Release Lever Pivot Pin

Assemble (Figures 19 through 29)

Tools Required:

J. 23073-01 Shift Tube Installer

J. 22635 Lock Shoe and Release Lever Pin Remover and Installer

NOTICE: For steps 9, 27 and 34, see "Notice" on page 3F2-1 of this section.

- If the bearing house was disassembled, repeat steps 1-9.
- Apply a thin coat of lithium grease to all friction surfaces.

1. Bearings into the bearing housing, if removed.
2. Lock shoe springs (160), lock shoes (152 and 153) and shoe pin (155) in the bearing housing (159). Use J 22635 or a 4.5 mm (0.180-inch) diameter rod to line up the shoes for pin installation.
3. Release lever (163), spring (161) and pin (162).

Important

- To relieve the load on the release lever, hold the shoes inward and wedge a block between the top of the shoes (over slots) and bearing housing.

4. Sector drive shaft (154) into the housing (159).
   - Lightly tap the sector (157) onto the shaft (154) far enough to install the snap ring.
5. Snap ring.
6. Lock bolt. Engage the bolt with the sector cam (157) surface.
7. Rack (166) and spring (165). The block tooth on the rack should engage the block tooth on the sector (figure 28).
8. Tilt release lever (163).
9. Lock bolt spring (151) and retaining screw (148).

Tighten

- Screw to 4 N•m (35 in. lbs.).

10. Shift lever spring (183) into the housing. Wind the spring up with pliers and push it into the housing.
    - On floor shift models, install the plunger and slide the gearshift lever housing onto the mast jacket.
11. Washer (182) and lock plate (181). Slide the lock plate into the notches in the jacket.

NOTICE: Do not push or tap on the end of the shift tube. Be sure that the shift tube lever is aligned with the slotted opening at the lower end of the mast jacket or damage to the shift tube and mast jacket could result.

12. Shift tube (194) into the lower end of the mast jacket (192).
    - Align the keyway in the tube with the key in the shift lever housing.
    - Install the wobble plate end of J 23073-01 into the upper end of the shift tube far enough to reach the enlarged portion of the tube.
    - Install the adapter over the end of the tool, seating it against the lock plate.
    - Place the nut on the threaded end of the tool and pull the shift tube (194) into the housing (figure 29).
    - Remove J 23073-01.
13. Bearing support washer (180) and retaining ring (179). Pull the shift lever housing up far enough to compress the lock plate washer.
14. Bearing support. Align the "V" in the support with the "V" in the jacket.

15. Screws (173) through the support and into the lock plate (181).
    - Screws (173) to 6.8 N•m (60 in. lbs.).
    - Align the lower bearing adapter (195) with the notches in the jacket (192).
16. Adapter (195) into the lower end of the jacket (192) (column shift models).
17. Lower bearing (196), bearing reinforcement (197) and retaining clip (198) (column shift models).
    - Align the retaining clip (198) with the slots in the reinforcement (197), jacket (192) and adapter (195).
    - On floor shift models, install the lower bearing (203), retainer (204) and retainer screws (205).
18. Centering spheres (169) and anti-lash spring (170) in the upper shaft (168).
19. Lower shaft (172) from the same side of the spheres that the spring ends protrude.
20. Steering shaft assembly into the shift tube (194) from the upper end. Carefully guide the shaft through the shift tube (194) (column shift models) and bearing.
21. Ignition switch actuator rod (167) through the shift lever housing and insert it in the slot in the bearing support.
    - Extend the rack (166) downward from the bearing housing.
22. Bearing housing (159) over the steering shaft (168).
    - Engage the rack (166) over the end of the actuator rod (167) (figure 29).
- With the release lever (163) installed, hold the lock shoes (152 and 153) in the disengaged position.
23. Bearing housing (159) over the steering shaft (168) until the pivot pin (156) holes line up.
24. Pivot pins (156).
    - Place the bearing housing (159) in the full "up" position.
25. Tilt lever spring guide (147), spring (146) and retainer (145).
    - With a suitable screwdriver, push the retainer (145) in and turn clockwise to engage it in the housing.
26. Tilt lever opening cap (144).
    - Remove the tilt release lever.
27. Turn signal housing (138) and retaining screws (133).

Tighten

- Screws to 5 N•m (45 in. lbs.).

28. Tilt release lever and shift lever.
29. Ignition switch (188). Refer to "Ignition Switch Replacement" in this section.
30. Tone alarm switch (134), if removed. Refer to "Tone Alarm Switch Replacement" in this section.
31. Lock cylinder (137). Refer to "Lock Cylinder Replacement" in this section.
32. Turn signal switch (130). Refer to "Turn Signal Switch Replacement" in this section.
- Remove the column from the vise.
33. Align the groove across the upper end of the pot coupling with the flat on the steering shaft. Install the pot coupling and intermediate shaft assembly to the upper shaft (R/V Model).
34. Install the clamp, bolt and nut. The clamp bolt must pass through the shaft undercut.

Tighten

- Nut to 42 N•m (31 ft. lbs.).

35. Dash panel bracket and screws to the column.

Install or Connect

- Steering column. Refer to "R/V or P Model Steering Column Replacement" in this section.

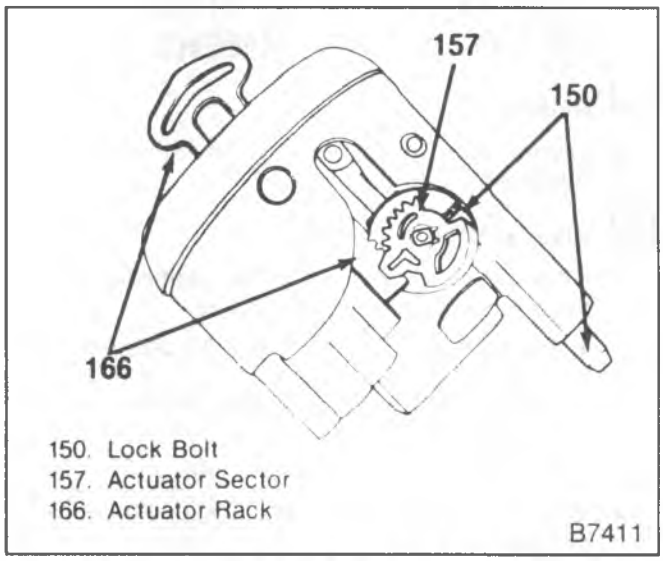

Figure 28—Installing Lock Bolt and Rack Assemblies

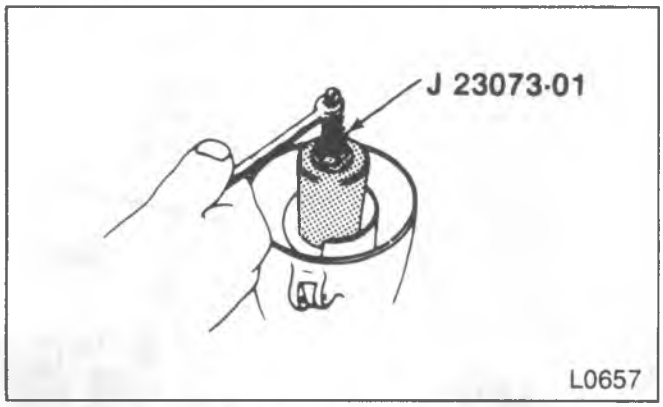

Figure 29—Installing Shift Tube Assembly

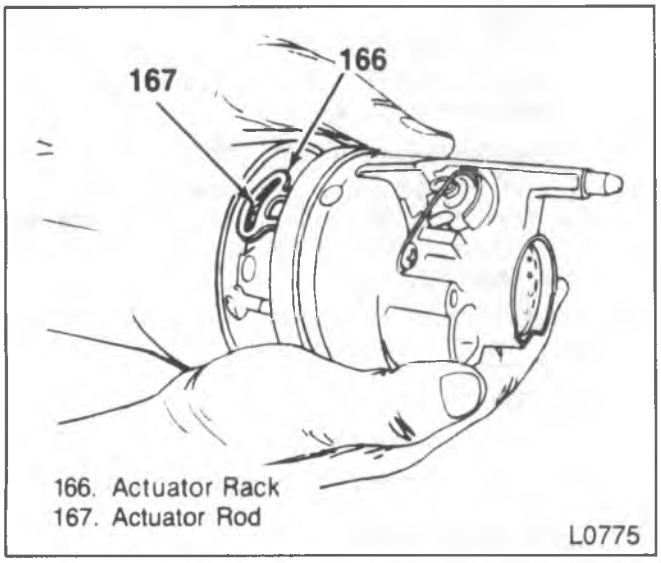

Figure 30 – Installing Bearing Housing

INTERMEDIATE SHAFT (P MODELS; COMMERCIAL)

Remove or Disconnect

- Intermediate shaft. Refer to "Intermediate Shaft Replacement" in this section.

Disassemble (Figure 31)

- If the upper and lower half of the intermediate shaft is to be replaced, proceed as follows:
  - Place the intermediate shaft (320) on a bench and straighten the tangs on the dust cap (329). Separate the upper and lower portions of the shaft assembly.

1. Dust cap (329) and dust seal (328).

- If the trunnion assemblies are to be replaced, proceed as follows:

2. Bearing cups (325).
   - Support the yoke on a bench vise and drive out one bearing cup by tapping on the opposite bearing cup. Use a soft drift and hammer.
   - Support the other side of the yoke and drive out the remaining bearing cups, as described in the previous step.
3. Trunnion (326) from the yokes (324 and 327).
4. Trunnion (326) from the yokes (331 and 330).

Assemble (Figure 31)

- If the yoke trunnions were removed, assemble as follows:

1. Trunnion (326) into the yokes (331 and 330).
2. Trunnion (326) into the yokes (327 and 321).
3. Bearing cups (325) into the yokes.

- Reassemble the intermediate shaft assembly as follows:

4. Dust cap (329) and dust seal (328) over the shaft of the lower yoke (330) assembly.

- Align the arrow on the lower yoke assembly shaft with the arrow on the upper yoke assembly tube and push the two assemblies together.
- Push the dust seal (328) and dust cap (329) into position on the lower end of the upper yoke assembly and bend the tangs of the dust cap down against the yoke tube.

Install or Connect

- Intermediate shaft. Refer to "Intermediate Shaft Replacement" in this section.

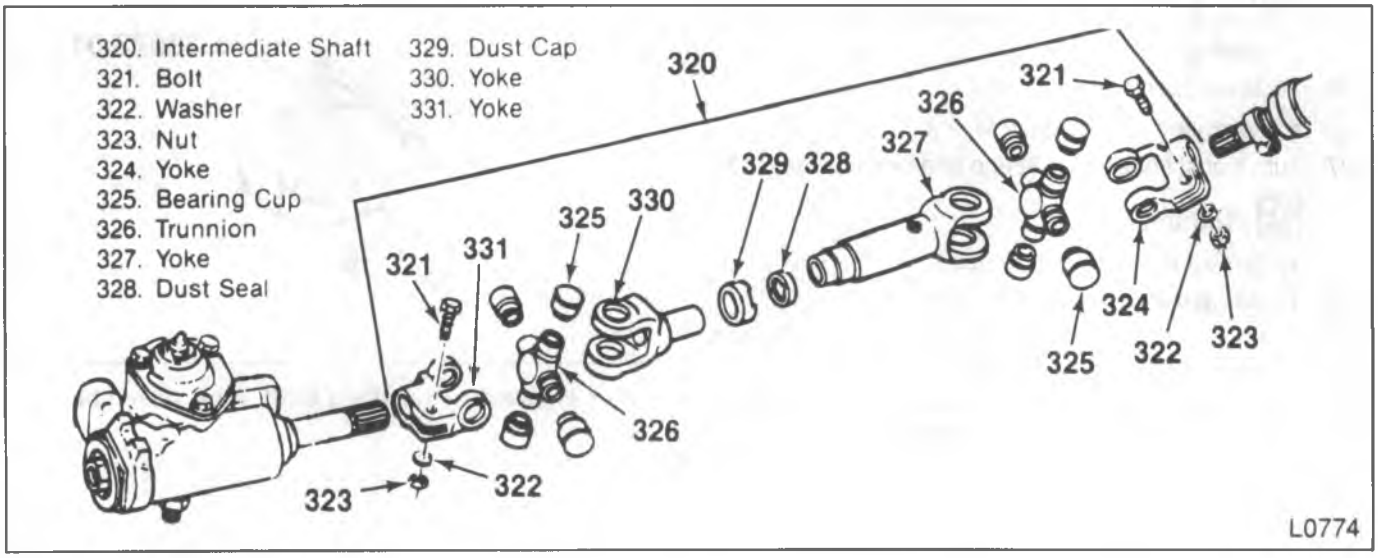

SPECIFICATIONS

FASTENER TORQUE

DESCRIPTION	N·m	Ft. Lbs.	In. Lbs.
Turn Signal Switch Attaching Screws	4.0	—	35
Ignition Switch Attaching Screws	4.0	—	35
Dimmer Switch Attaching Screws	4.0	—	35
Turn Signal Housing Retaining Screws	5.0	—	45
Steering Wheel Nut	40	30	—
Flexible Coupling Clamp Bolt	42	31	—
Flexible Coupling To Flange Bolt Nuts	27	20	—
Steering Gear To Frame Bolts (R and V Models)	88	65	—
Steering Gear To Frame Bolts P3, (32, 42) FS3	88	65	—
Steering Gear To Frame Bolts P3 (42) Excluding FS3	88	65	—
Intermediate Shaft Clamp Bolt/Nut	23	—	20
Column Support Outer Brace Bolt P3 (42)	25	—	18
Intermediate Shaft Pinch Bolt P3 (42) FS3	102	75	—
Intermediate Shaft Pinch Bolt P3 (42) Excluding FS3	102	75	—
Steering Column Support Bracket Screws (R and V)	30	22	—
Steering Column Support Bracket Clamp Nuts (P-Models)	25	18	—
Steering Column Shaft To Intermediate Shaft (Pot Coupling) Assembly	60	44	—

TB-3023-2A

SPECIAL TOOLS

1. 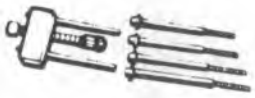 J 1859-03

2. J 21854-01

3. J 22635

4. 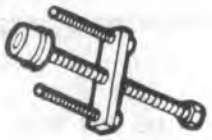 J 23072

5. J 23073-01

6. J 23653-C

1. Steering Wheel Puller
2. Pivot Pin Remover
3. Lock Shoe And Release Lever Pin Remover And Installer
4. Shift Tube Remover
5. Shift Tube Installer
6. Lock Plate Compressor

V0057

SECTION 4A

PROPELLER SHAFT

NOTICE: When fasteners are removed, always reinstall them at the same location from which they were removed. If a fastener needs to be replaced, use the correct part number for that application. If the correct part number fastener is not available, a fastener of equal size and strength (or stronger) may be used. Fasteners that are not reused and those requiring thread locking compound will be called out. The correct torque value must be used when installing fasteners that require it. If the above conditions are not followed, parts or system damage could result.

CONTENTS

SUBJECT	PAGE
Description	4A- 1
Propeller Shaft	4A- 1
Center Bearing	4A- 1
Universal Joint	4A- 3
Diagnosis of the Propeller Shaft and Universal Joint	4A- 4
On-Vehicle Service	4A- 5
Propeller Shaft Balance Check	4A- 5
Propeller Shaft Runout Check	4A- 5
Propeller Shaft Replacement (Rear Drive)	4A- 7
Propeller Shaft Replacement (Front Drive)	4A-11
Universal Joint Replacement	4A-12
Pinion Flange Replacement	4A-12
Front Yoke Replacement	4A-12
Center Bearing Replacement	4A-13
Constant Velocity Joint Replacement	4A-13
Lubrication	4A-16
Specifications	4A-17

DESCRIPTION

PROPELLER SHAFT

Torque is transmitted from the transmission to the axle(s) through one or more propeller shafts and universal joint assemblies. The number of propeller shafts and universal joint assemblies vary with the vehicle wheel base and the combination of transmission, transfer case (front drive) and rear axle equipment.

All propeller shafts are the balanced tubular type. A splined slip joint is provided in some drivelines and others use a companion flange at the transmission end of the driveline. If two or more propeller shafts are used on a vehicle the slip joint is usually at the forward end of the rear propeller shaft.

Phasing

The propeller shaft is designed and built with the yoke lugs (ears) in line with each other (figure 1). This design produces the smoothest running shaft possible, and is called phasing.

Vibration can be caused by an out of phase propeller shaft. The propeller shaft will absorb vibrations from speeding up and slowing down each time the universal joint goes around. This vibration would be the same as a person snapping a rope and watching the "wave" reaction flow to the end. A propeller shaft working in phase would be similar to two persons snapping a rope at the same time, and watching the "waves" meet and cancel each other out. In comparison this would be the same as the universal joints on a propeller shaft. A total cancellation of vibration produces a smooth flow of power in the driveline. It is very important to reference mark the propeller shaft before removal, to assure phased installation alignment. Some propeller shafts have alignment marks or arrows stamped on the shaft at the time of production.

CENTER BEARING

Center bearings support the driveline when two or more propeller shafts are used. The center bearing is a ball-type bearing mounted in a rubber cushion that is attached to a frame crossmember. The bearing is pre-lubricated and sealed by the manufacturer (figure 2).

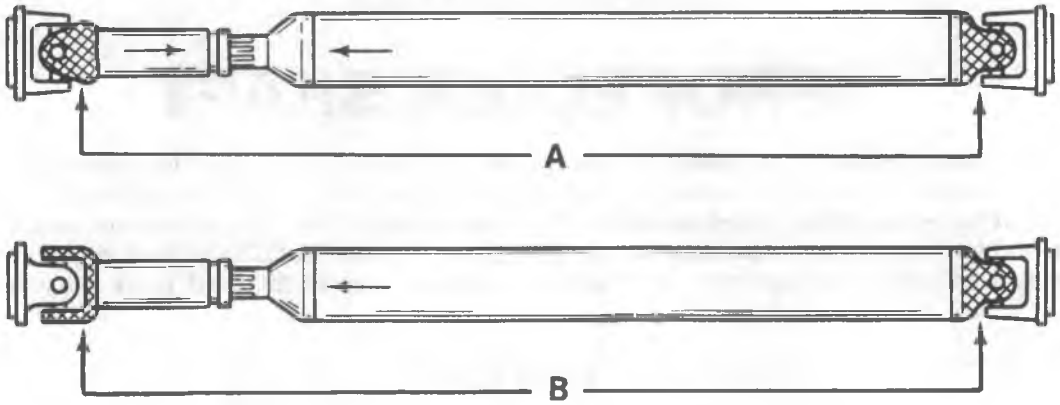

A. Correct Phasing - Yoke Lugs (Ears) and Alignment Marks Aligned
B. Incorrect Phasing - Yoke Lugs (Ears) and Alignment Marks not Aligned

B-06716

Figure 1 – Propeller Shaft Assembly; In Phase

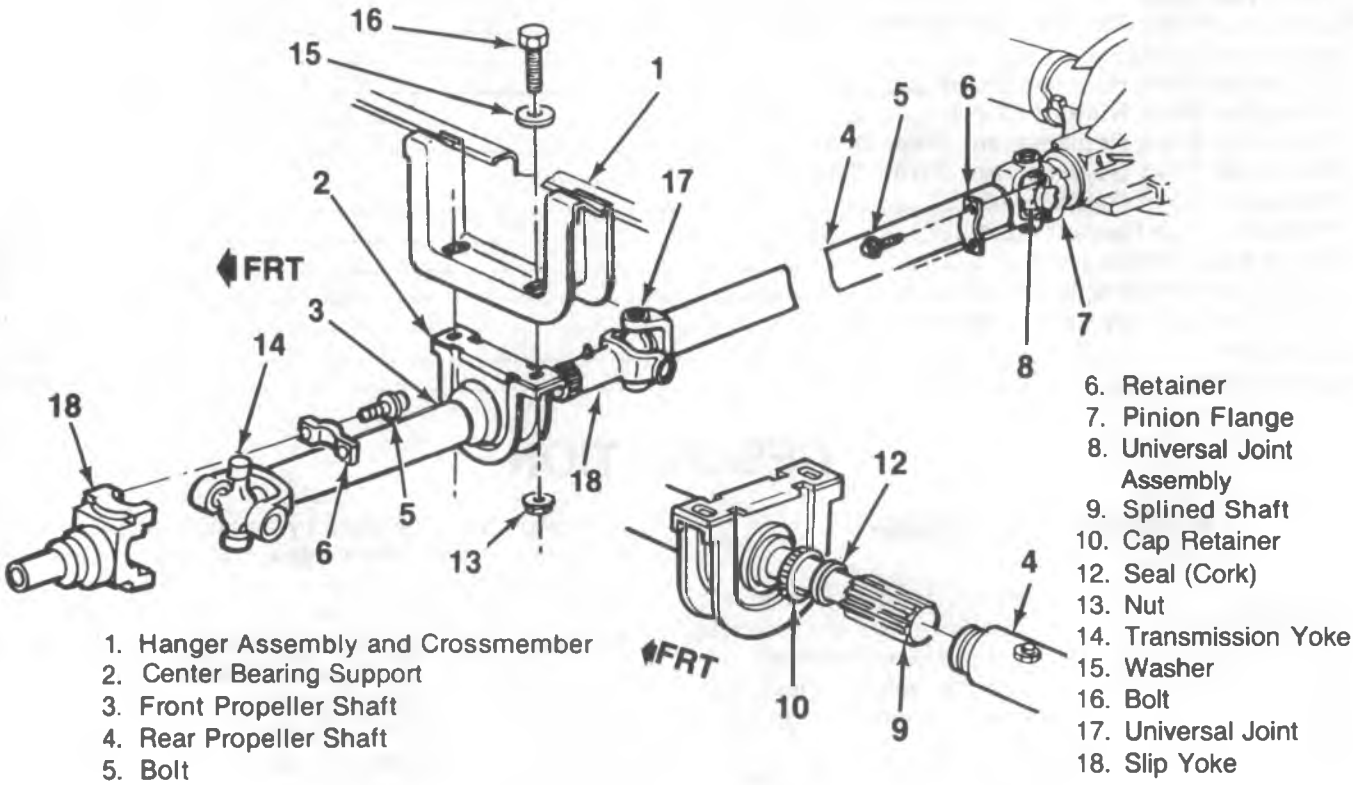

1. Hanger Assembly and Crossmember
2. Center Bearing Support
3. Front Propeller Shaft
4. Rear Propeller Shaft
5. Bolt
6. Retainer
7. Pinion Flange
8. Universal Joint Assembly
9. Splined Shaft
10. Cap Retainer
12. Seal (Cork)
13. Nut
14. Transmission Yoke
15. Washer
16. Bolt
17. Universal Joint
18. Slip Yoke

V0066

Figure 2 – Center Bearing and Propeller Shaft Detail

UNIVERSAL JOINT

A universal joint is two Y-shaped yokes connected by a crossmember called a spider. The spider is shaped like a cross having arms of equal length called trunnions (figure 3).

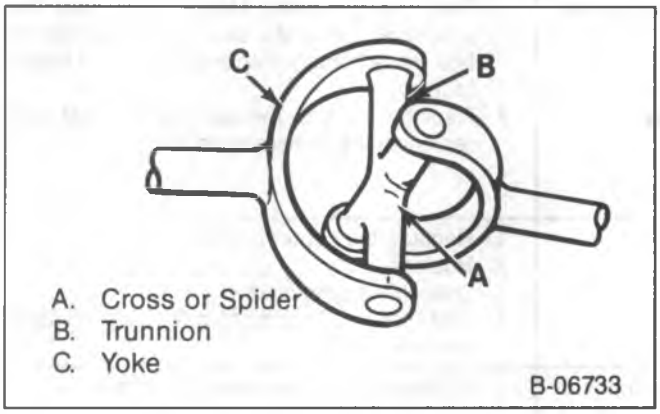

Figure 3 – Simple Universal Joint

Universal joints are designed to handle the effects of various loadings and axle windup during acceleration. Within the designed angle variations the universal joint will operate efficiently and safely. When the design angle is changed or exceeded the operational life of the joint may decrease.

The bearings used in universal joints are the needle roller type. The needle rollers are held in place on the trunnions by round bearing cups. The bearing cups are held in the yokes by either snap rings or injected plastic, depending on the manufacturer of the joint.

When a driveline has a large or deep angle a constant velocity joint is used. Essentially, the constant velocity joint is made of two universal joints coupled by a yoke and phased for constant velocity. A centering ball socket between the joints keeps a relative position between the two joints. This centering device causes each of the two units to operate through one half of the complete angle between the propeller shaft and the differential carrier (figure 4). The ball socket on a constant velocity universal joint requires periodic lubrication through the fitting provided.

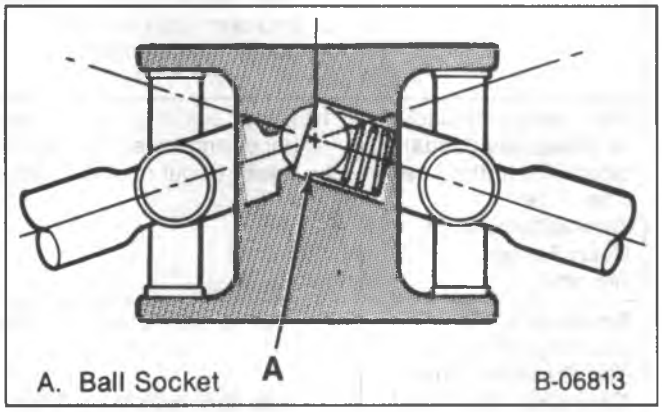

Figure 4 – Constant Velocity Joint

DIAGNOSIS OF THE PROPELLER SHAFT AND UNIVERSAL JOINT

PROBLEM	POSSIBLE CAUSE	CORRECTION
Leak At The Front Slip Yoke (An Occasional Drop Of Lubricant Leaking From The Splined Yoke Is Normal And Requires No Attention)	1. Rough surface on splined yoke; burred, nicked or worn. 2. Defective transmission rear oil seal.	1. Replace the seal. Minor burrs can be smoothed by careful use of crocus cloth or fine stone honing. Replace the yoke if badly burred. 2. Replace the transmission rear oil seal and replenish the transmission oil.
Universal Joint Noise	1. Center bearing. 2. Worn universal joint bearings. 3. Improper lubrication. 4. Loose flange bolts.	1. Replace the center bearing. 2. Replace. 3. Lubricate as directed. 4. Tighten to "Specifications" later in this section.
Ping, Snap, Or Click In Drive Line (Usually Heard On Initial Load After The Transmission Is In Gear; Forward Or Reverse)	1. Loose bushing bolts on the rear springs or upper and lower control arms. 2. Loose or out of phase companion flange.	1. Tighten the bolts to specified torque. 2. Remove companion flange, turn 180 degrees from its original position, lubricate the splines and install. Tighten the bolts and pinion nut to specified torque.
Knocking Or Clunking Noise In The Driveline When Operating The Vehicle In A Floating Condition In High Or Neutral Gear At 10 MPH (16 km/h)	1. Worn or damaged universal joint. 2. Side gear hub counterbore in the differential is worn oversize.	1. Replace the worn or damaged universal joint. 2. Replace the differential case and/or the sidegears.
Roughness Or Vibration	1. Bent or dented propeller shaft. 2. Undercoating on propeller shaft. 3. Tire unbalance, 30-80 mph (48-129 km/h). Not throttle conscious. 4. Tight universal joints. 5. Worn universal joints. 6. Burrs or gouges on companion flange. Check snap ring locating surfaces on flange yoke. 7. Propeller shaft, parking brake drum or companion flange is unbalanced. 8. Incorrect rear joint angle. The angle is usually too large when it is a factor. 9. Excessive looseness at the slip spline. 10. Distorted or damaged yokes or flanges. 11. Yokes out of phase. 12. Propeller shaft runout at 50 mph (80 km/h). Throttle conscious.	1. Replace propeller shaft. 2. Clean propeller shaft. 3. Balance or replace as required. 4. Impact yokes with a shaft hammer to free up. If unable to free up or if joint feels rough when rotated, replace. 5. Replace. 6. Rework or replace the companion flange. 7. Check for a missing balance weight on the propeller shaft. Rotate the companion flange 180 degrees. 8. Check and correct trim height at curb weight. Check and correct joint angle. 9. Replace necessary parts. 10. Install new yokes or flanges. 11. Remove companion flange, turn 180 degrees from the original position, lubricate the splines and install. Tighten bolts to specified torque. 12. Check propeller shaft runout at front and rear. Should be less than specified. If above, rotate propeller shaft 180 degrees and recheck. Replace the propeller shaft if runout is still over specification.
Scraping Noise	Slinger, companion flange, or end yoke rubbing on rear axle or center bearing.	Correct the interference.

GMTB-0836-2L

DIAGNOSIS OF THE PROPELLER SHAFT AND UNIVERSAL JOINT (CONT.)

PROBLEM	POSSIBLE CAUSE	CORRECTION
Squeak	1. Lack of lubricant. 2. Center bearing.	1. Lubricate joints and splines. Also check for worn or brinelled parts. 2. Replace or lubricate.
Whine Or Whistle	Center support bearing.	Place the vehicle on a hoist with rear wheels free to rotate and diagnose for source of noise, replace.
Shudder On Acceleration, (Low Speed)	1. Loose or missing bolts at the center bearing or flanges. 2. Incorrectly set front joint angle. 3. Worn universal joint.	1. Replace or tighten bolts to specified torque. 2. Shim under the transmission support mount to change the front joint angle. 3. Replace.

GMTB-0837-2L

ON-VEHICLE SERVICE

PROPELLER SHAFT BALANCE CHECK

Remove or Disconnect

- Raise the vehicle on a twin post hoist so the wheels can spin.

1. Wheel and tire assemblies.
2. Brake drums or rotors. Refer to HYDRAULIC FOUNDATION BRAKES (SEC. 5A2).
   - **DO NOT APPLY THE BRAKE WITH THE DRUMS REMOVED.**

Inspect

Propeller shaft, universal joints and attachments for mud, undercoating or loose fasteners.

Clean

Propeller shaft, universal joints and attachments.

NOTICE: See "Notice" on page 4A-1 of this section.

Tighten

Any loose attachments or fasteners to "Specifications" at the end of this section.

Important

Run the vehicle in gear at the speed where the disturbance peaks; observe the intensity of the disturbance.

Stop the engine.

3. Propeller shaft.
   - Rotate the propeller shaft 180 degrees from the original position.

Install or Connect

1. Propeller shaft.
   - Determine the position which gives the best balance.
2. Brake drums or rotors. Refer to HYDRAULIC FOUNDATION BRAKES (SEC. 5A2).
3. Wheels and tire assemblies.

- Determine the position which gives the best driveline response by road testing the vehicle for a final check of the propeller shaft balance.
- If the balance is unacceptable, replace the propeller shaft.

PROPELLER SHAFT RUNOUT CHECK

Noise or vibration at high speed could be caused by a bent propeller shaft. The propeller shaft could have been damaged by rough handling or a collision. Check for propeller shaft straightness.

1. Raise the vehicle on a twin post hoist so the wheels can spin.
2. Attach a dial indicator having a magnetic base to a smooth place on the vehicle underbody.

Important

- Do not attach the dial indicator base at a weld.

3. Take dial indicator readings at the propeller shaft check points shown in figure 5. For runout specifications, refer to figure 6.
4. With the transmission in neutral, hand rotate the axle pinion flange or the transmission yoke and take the necessary dial indicator readings on the propeller shaft. Record the readings.
   - One-piece: Measure the runout at the points shown in figure 5. If runout exceeds specifications, rotate the propeller shaft 180 degrees at the pinion flange and install. Check the runout again.

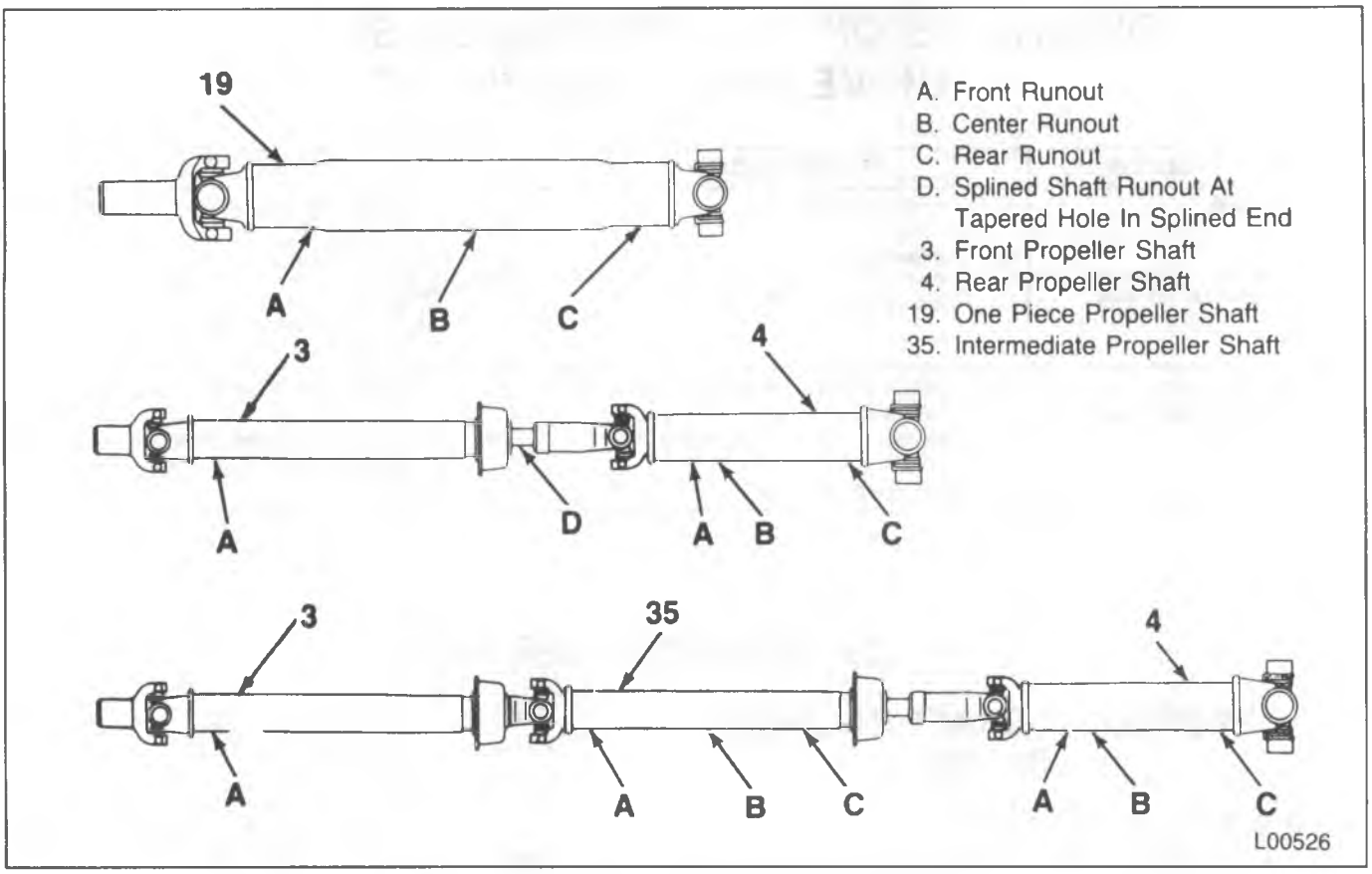

Figure 5 – Checking Propeller Shaft Runout

- Two-piece: Measure the rear propeller shaft runout (figure 5). Reference mark the position of the rear propeller shaft yoke to the pinion flange, then remove the rear propeller shaft and measure the front propeller shaft runout, both on the tube and at the tapered hole on the splined end (figure 5). If the runout exceeds specifications, rotate the rear propeller shaft 180 degrees at the pinion flange and install. Check the runout again.
- Three-piece: Measure each shaft at both ends (approximately 3 inches from the weld), and also in the center. If a problem is found, disconnect each shaft one at a time and measure the remaining shafts until the problem shaft is found. Rotate the shaft connecting to the problem shaft 180 degrees and install. Check the runout again. Repeat this procedure in an attempt to bring the runout to specifications.

5. If the runout is still over specifications at one or more check points, replace the appropriate propeller shaft. Check the runout on the replacement propeller shaft.
   - If the new propeller shaft runout is over specifications, check for a bent pinion flange.

Important

- The splined end of a propeller shaft is critical to the smooth operation of a two or three-piece propeller shaft. Be sure the dial indicator readings are accurate.

PROPELLER SHAFT	FRONT CHECK	CENTER CHECK	REAR CHECK
ONE PIECE	.040	.050	.055
TWO PIECE FRONT	.020		.008▲
TWO PIECE REAR	.030*	.030	.035
THREE PIECE FRT/CNTR/RR	.015	.010	.015

▲NOTE: Measured at tapered hole in end of splined shaft after the rear propeller shaft is removed.

*NOTE: Measured with rear shaft connected to front shaft. Front shaft must be within runout specifications.

L00534

Figure 6 – Propeller Shaft Runout Specifications

PROPELLER SHAFT REPLACEMENT (REAR DRIVE)

Models with One-Piece Propeller Shaft

Remove or Disconnect (Figure 2)

- Raise the vehicle on a hoist. Support with suitable safety stands.

1. Skid plate (if equipped).

- Reference mark the propeller shaft (4) to pinion flange (7) connection.
- Support the propeller shaft (4).

2. Bolts (5).
3. Retainers (6).
4. Yoke and universal joint assembly (8).

Important

- Do not pound on the original propeller shaft yoke ears. The plastic injection joints may fracture. Never pry or place any tool between a yoke and a universal joint.
- Tape bearing cups onto yoke and universal joint to prevent the loss of bearing rollers.

5. Propeller shaft (4).
   - Slide the propeller shaft (4) forward.
   - Lower the propeller shaft (4) and withdraw under the rear axle.
   - Do not allow the universal joint to incline greatly; the joint may fracture.

Models with a Two-Piece Propeller Shaft

- Raise vehicle and support with suitable safety stands.

1. Skid plate (if equipped).

- Reference mark the rear propeller shaft to the pinion flange and to the front propeller shaft, then reference mark the front shaft to the yoke at the transmission.

2. Bolts (5) at pinion flange.
3. Retainers (6) at pinion flange.
4. Loosen cap retainer (10).
5. Rear propeller shaft (4).

Important

- Do not pound on the original propeller shaft yoke ears. The plastic injection joints may fracture. Never pry or place any tool between a yoke and a universal joint.
- Tape bearing cups onto yoke and U-joints to prevent loss of the needle bearings.
- Slide propeller shaft forward to disengage rear U-joint from pinion flange. Then slide shaft rearward off front propeller shaft splines.

6. Bolts (5) at yoke.
7. Retainers (6) at yoke.
8. Bolts (16), washers (15) and nuts (13).
9. Front propeller shaft (3) with center bearing support (2) from vehicle.

Clean

- All parts.

Inspect

1. Outer diameter of transmission yoke (14) for burrs. Any burring will damage the transmission seal.
2. For proper installation and uniform seating of bearing cups.
3. Slip yoke (18) splines for wear.
4. For twisted slip yoke splines or possibly the wrong universal joint.

Install or Connect (Figures 2, 6 and 7)

One-Piece Propeller Shaft

NOTICE: For steps 4 and 5, see "Notice" on page 4A-1 of this section.

1. Propeller shaft (4) into the transmission.
   - Lubricate slip joint.
2. Yoke and universal joint assembly (8) onto the pinion flange (7).
   - Align the reference marks on the pinion flange (7) and the propeller shaft rear yoke. Seat the yoke properly.
3. Retainer (6).
4. Bolts (5).

   Tighten

   - Bolts (5) to 20 N•m (15 ft. lbs.).
5. Skid plate (if equipped).

   Tighten

   - Bolts to 26 N•m (19 ft. lbs.).

Two-Piece Propeller Shaft

NOTICE: For steps 1, 2, 6 and 7, see "Notice" on page 4A-1 of this section.

- Lubricate slip yoke.

1. Front propeller shaft up against yoke and install retainers (6) and bolts (5), lining up reference marks.
2. Bolts (16), washers (15) and nuts (13) at the center bearing support to the crossmember. Refer to figure 7 for center bearing alignment.

   Tighten

   - Bolts (5) to 20 N•m (15 ft. lbs.).

   R/V Models

   - Bolts (16) to 40 N•m (30 ft. lbs.).

   P Models

   - Bolts (16) to 53 N•m (39 ft. lbs.).

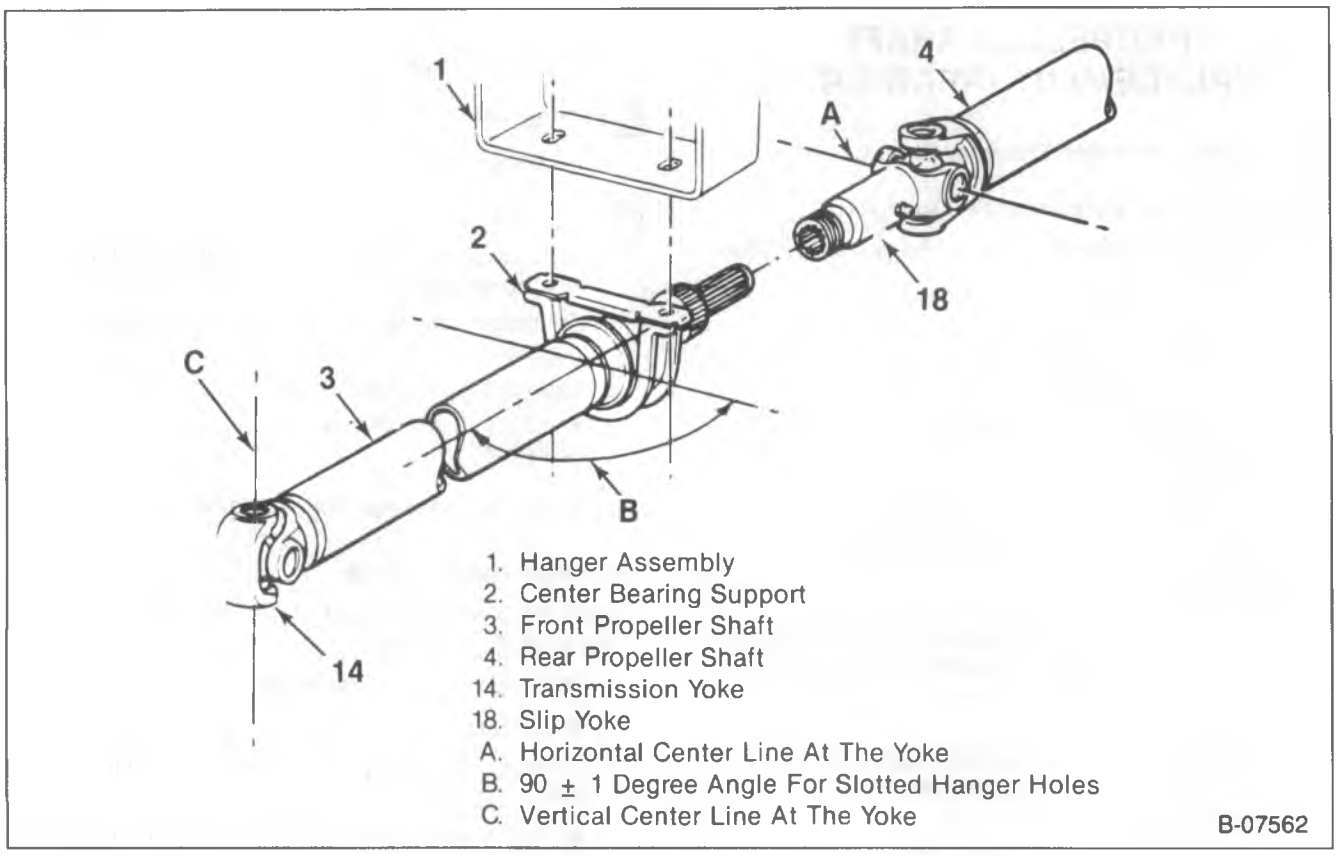

Figure 7 – Multiple Propeller Shaft Alignment; In Phase

3. Rear propeller shaft, lining up reference marks. Slide the front end of the shaft onto the splines of the front shaft.
   Slide it far enough forward to allow the rear U-joint to engage the pinion flange.
4. Set seal (12) in place and secure cap retainer onto rear shaft.
5. Retainers (6).
6. Bolts (5).

Tighten

- Bolts (5) to 20 N•m (15 ft. lbs.).

7. Skid plate (if equipped).

Tighten

- Bolts to 26 N•m (19 ft. lbs.).

8. Remove safety stands and lower vehicle.

P Models with a Three-Piece Propeller Shaft

Remove or Disconnect (Figure 8)

- Raise the vehicle on a hoist.
- Reference mark the rear propeller shaft (4) to pinion flange (7) connection.
- Support the rear propeller shaft (4).

1. Cap retainer (10) from rear propeller shaft (4) at intermediate propeller shaft (35) connection.
2. Bolts (5) or nuts and washers (38 and 39) from pinion flange (7).
3. Retainers (6 or 37).
4. Yoke and universal joint assembly (8) from pinion flange (7).

Important

- Do not pound on the original propeller shaft yoke ears. The plastic injection joints may fracture. Never pry or place any tool between a yoke and a universal joint.
- Tape bearing cups onto yoke to prevent the loss of bearing rollers.

5. Rear propeller shaft (4).
   - Slide the rear propeller shaft (4) forward.
   - Lower the rear propeller shaft (4) and withdraw under the rear axle.
   - Do not allow the universal joint assembly (8) to incline greatly; the joint may fracture.

- Reference mark the intermediate propeller shaft (35) to front propeller shaft (3) yoke.
- Support the intermediate propeller shaft (35).

6. Bolts (5) from front propeller shaft yoke at front center bearing support (2).
7. Retainers (6).
8. Nuts (44) from intermediate shaft center bearing support (36) attaching bolts (42).
9. Bolts (42) and washers (43).
10. Intermediate propeller shaft center bearing support (36) from hanger.

11. Yoke and universal joint assembly (8) from front propeller shaft rear yoke.

Important

- Do not pound on the original propeller shaft yoke ears. The plastic injection joints may fracture. Never pry or place any tool between a yoke and a universal joint.
- Tape bearing cups onto yoke to prevent the loss of bearing rollers.

12. Intermediate propeller shaft (35).

- Reference mark the front propeller shaft (3) to the yoke or parking brake drum.
- Support the front propeller shaft (3).

13. Bolts and retainers (5 and 6) from yoke, or nuts and washers (40 and 41) from parking brake drum studs.
14. Nuts (13) from front propeller shaft center bearing support (2) attaching bolts (16).
15. Bolts (16) and washers (15).
16. Front propeller shaft center bearing support (2) from hanger.
17. Yoke and universal joint assembly (8) from transmission connection.

Important

- Do not pound on the original propeller shaft yoke ears. The plastic injection joints may fracture. Never pry or place any tool between a yoke and a universal joint.
- Tape bearing cups onto yoke to prevent the loss of bearing rollers.

18. Front propeller shaft (3).

Clean

All parts.

Inspect

1. For proper installation and uniform seating of all universal joint bearing cups.
2. Intermediate propeller shaft (35) to rear propeller shaft (4) slip yoke splines for twisting or wear.
3. Inside of rear propeller shaft (4) slip yoke for spline twisting or wear.
4. Front and rear center bearing support (2 and 36) rubber insulators for deterioration or separation from the support framework.
5. Propeller shaft assemblies (3, 4 and 35) for damage.

Install or Connect (Figures 7 and 8)

NOTICE: For steps 2, 5, 7, 10 and 13 see "Notice" on page 4A-1 of this section.

1. Front propeller shaft (3) to yoke or parking brake drum studs.

- Make sure the reference marks are aligned.

- Support front propeller shaft.

2. Bolts and retainers (5 and 6) to yoke, or nuts and washers (40 and 41) to parking brake drum studs.

Tighten

P Models

- Nuts (13) to 53 N•m (39 ft. lbs.). Maintain alignment (figure 7).

R/V Models

- Nuts (13) to 40 N•m (30 ft. lbs.). Maintain alignment (figure 7).

3. Front center bearing support (2) to hanger (1).

- Align the center bearing support 90 degrees to the propeller shaft center line. Refer to figure 7.

4. Bolt (16) and washers (15).
5. Nuts (13).

Tighten

P Models

- Nuts (13) to 53 N•m (39 ft. lbs.). Maintain alignment (figure 7).

R/V Models

- Nuts (13) to 40 N•m (30 ft. lbs.). Maintain alignment (figure 7).

6. Intermediate propeller shaft (35) to front propeller shaft (3) yoke.

- Make sure reference marks are aligned.

- Support intermediate propeller shaft (35).

7. Bolts (5) and retainers (6).

Tighten

- Bolts (5) to 35 N•m (26 ft. lbs.).

8. Rear center bearing support (36) to hanger.

- Align the center bearing support 90 degrees to both the front and intermediate propeller shaft centerlines. Refer to figure 7.

9. Bolts (42) and washers (43).
10. Nuts (44).

Tighten

- Nuts (44) to 35 N•m (26 ft. lbs.). Maintain alignment (figure 7).

11. Rear propeller shaft (4) slip yoke to intermediate propeller shaft (35) splines.

- Mate the missing tooth in the rear propeller shaft (4) slip yoke with the bridged tooth on the intermediate propeller shaft (35).

- Support the rear propeller shaft (4).

12. Rear propeller shaft (4) to rear axle pinion flange (7).

- Make sure reference marks are aligned.

13. Bolts and retainers (5 and 6), or U-bolts, nuts and washers (37, 38 and 39).

Tighten

- Bolts (5) to 35 N•m (26 ft. lbs.) or nuts (38) to 27 N•m (20 ft. lbs.).

14. Cap retainer (10).

- Lubricate the rear propeller shaft (4) slip yoke.

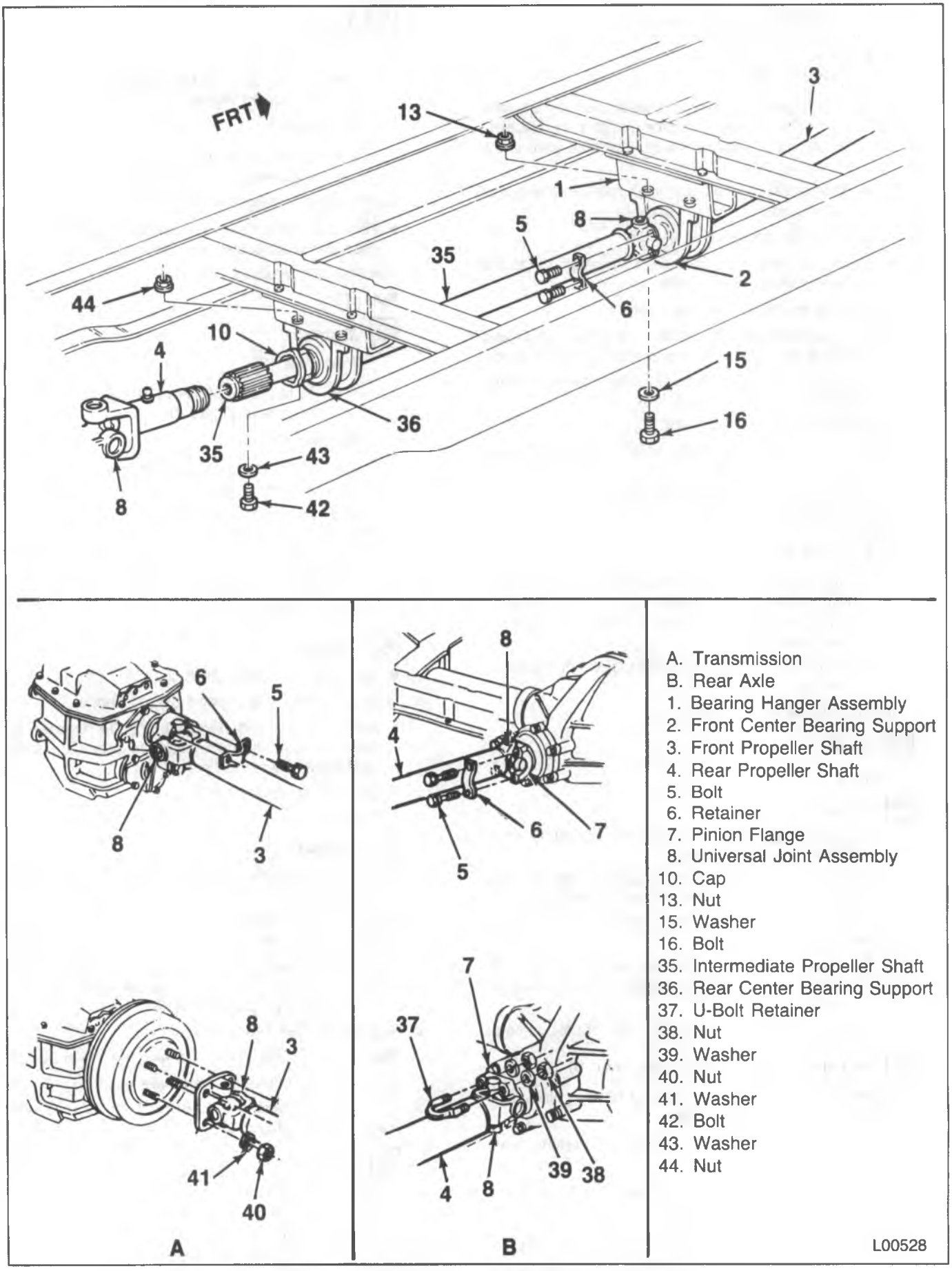

Figure 8 – Three-Piece Propeller Shaft – P Model

PROPELLER SHAFT REPLACEMENT (FRONT DRIVE)

Remove or Disconnect (Figure 9)

- Raise the vehicle on a hoist.
- Reference mark the relationship of the propeller shaft (24) to the front axle and the transfer case flange (27).

1. Skid plate (if equipped).
2. Bolts (30) or nuts and washers (20 and 21).
3. Retainers (32) or U-bolts (25).
4. Slip yoke (23) from the front axle yoke (22).

Important

- Do not pound on the original propeller shaft yoke ears. The plastic injection joints may fracture. Never pry or place any tool between a yoke and a universal joint.
- Tape bearing cups onto yoke to prevent the loss of bearing rollers.

5. Bolts (28) at the flange (27).
6. Slide the propeller shaft (24) forward enough to disengage, then withdraw the propeller shaft (24) rearward.

Clean

- All parts.

Inspect

1. Splines for damage, wear, burrs and twisting.
2. Bearings for wear.
3. Propeller shaft (24) for straightness.

Install or Connect (Figure 9)

NOTICE: For steps 3, 4 and 5 see "Notice" on page 4A-1 of this section.

- Lubricate the slip yoke (23) before installation. Refer to "Lubrication" in this section.

1. Slip yoke (23) to the axle yoke (22).
   - Mate the joint using reference marks.
   - Adjust propeller shaft (24) length.
- Support the propeller shaft (24).

2. U-bolts (25) or retainers (32).
3. Bolts (30) or nuts and washers (20 and 21).
4. Bolts (28) at the flange (27).
   - Mate the joint using reference marks.

Tighten

- All fasteners to "Specifications" at the end of this section.
- Lubricate the Constant Velocity Joint (29). Refer to "Lubrication" later in this section.

5. Skid plate (if equipped).

Tighten

- All fasteners to 26 N•m (19 ft. lbs.).

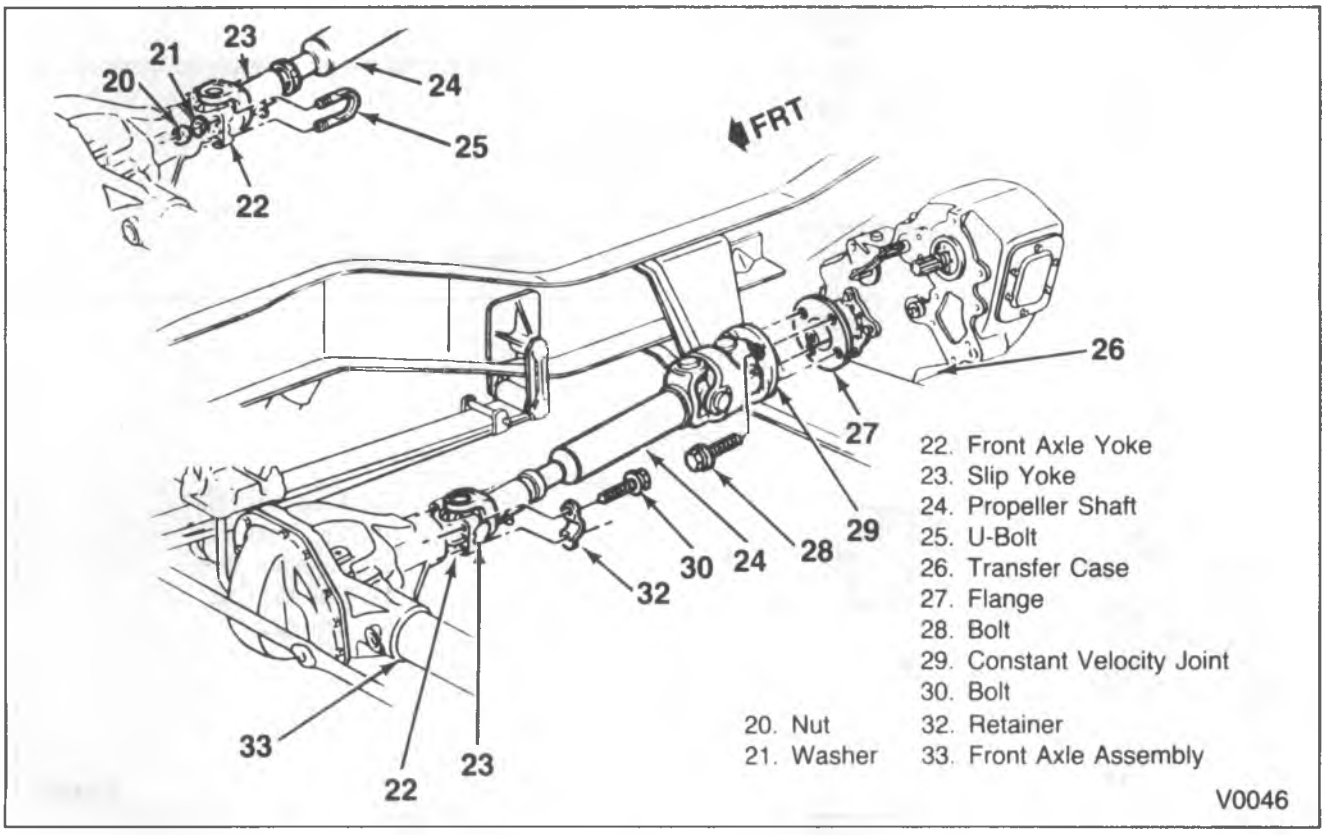

Figure 9—Front Propeller Shaft and Driveline Detail

UNIVERSAL JOINT REPLACEMENT

Remove or Disconnect (Figure 10)

- Raise vehicle and support with suitable safety stands.

1. Propeller shaft. Refer to "Propeller Shaft Replacement" in this section.
2. Retainer rings (51).

Important

- Do not pound on the yoke ears of the propeller shaft or the slip yoke. This may cause damage to the components.

3. Bearing cups (52) from the propeller shaft (3).
   - Using 2 sockets (one with a diameter just smaller than the bearing cup, the other with an opening large enough to accept a bearing cup) drive out the bearing cups by pressing them out using a vise or press.
   - If you are replacing the rear U-joint, go to step 1 of the "Install and Connect" procedure.
   - If you are replacing the front U-joint, repeat the first part of step 3 to remove the bearing cups from the slip yoke.
4. Trunnion (53) from the slip yoke (18).

Install or Connect (Figure 18)

1. Bearing cups (52).
   - Set trunnion (53) in between yoke ears of the propeller shaft and start installing both bearing cups by hand. Continue to drive them inward by squeezing them together using a press or vise.
   - Use a socket with a smaller diameter than the cup and drive it past the retainer ring groove.
2. Retainer ring (51).
   - Turn the shaft over.
   - Drive the opposite bearing cup past the retainer ring groove.
3. Retainer ring (51).
4. Set the slip yoke (18) over the trunnion (53) and install as outlined in steps 1 through 3.
5. Propeller shaft. Refer to "Propeller Shaft Replacement" in this section.
6. Remove safety stands and lower vehicle.

PINION FLANGE REPLACEMENT

- For identification of the pinion flange, see figure 11. For replacement procedures, refer to REAR AXLES (SEC. 4B1).

FRONT YOKE REPLACEMENT

Remove or Disconnect (Figures 12 and 13)

- Raise vehicle on hoist and support with suitable stands.

1. Propeller shaft. Refer to "Propeller Shaft Replacement" in this section.
   - On one-piece propeller shafts, the front (slip) yoke slides off the tailshaft of the transmission with the propeller shaft. Therefore, the yoke is removed by disassembling the front U-joint. Refer to "Universal Joint Replacement" in this section.
   - On two- or three-piece propeller shafts, the front yoke is bolted to the tailshaft.
2. Bolt (54) and washer (55).
3. Yoke.
   - Cap the end of the transmission to minimize fluid loss.

Inspect

- Splines for wear, burrs or twisting.
- Yoke ears for damage.

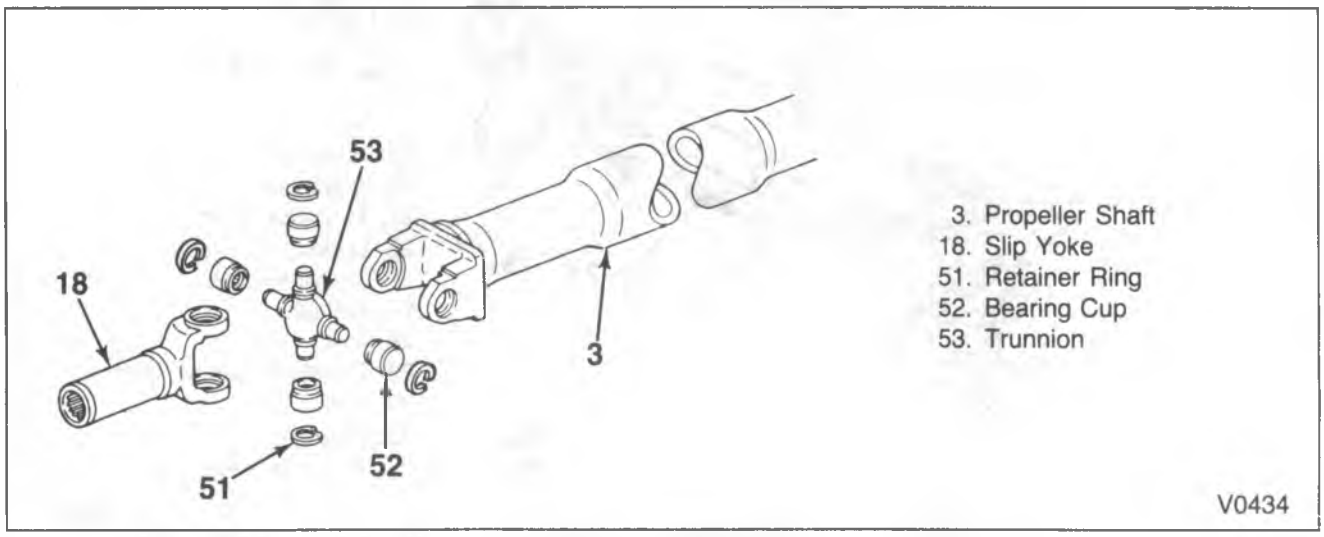

Figure 10—U-Joint Components

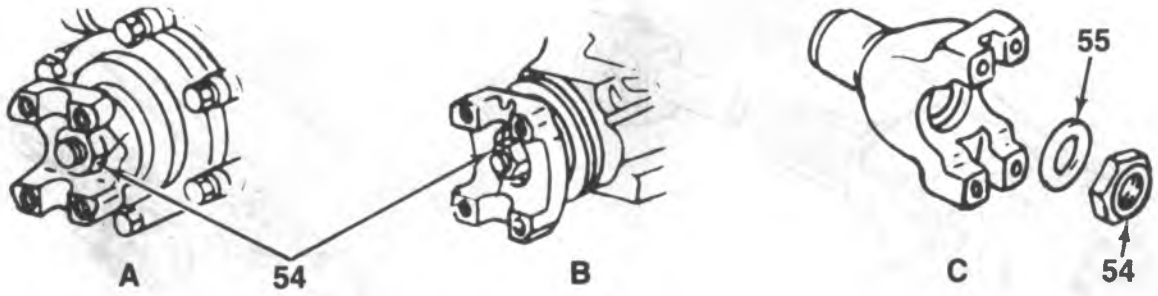

A. Saginaw
B. Dana
C. Rockwell

54. Bolt
55. Washer

V0442

Figure 11 – Pinion Flange Designs

Install or Connect (Figures 12 and 13)

Two- or three-piece

1. Front yoke.

NOTICE: See "Notice" on page 4A-1 of this section.

2. Washer (55) and bolt (54).

Tighten

- Bolt (54) to 110 N•m (82 ft. lbs.).

One-piece

3. Yoke onto propeller shaft.
   - Refer to "Universal Joint Replacement" in this section.

One, two- or three-piece

4. Propeller shaft. Refer to "Propeller Shaft Replacement" in this section.
   - Remove safety stand, lower vehicle and check transmission fluid level. Refer to MAINTENANCE AND LUBRICATION (SEC. 0B).
5. Remove safety stands and lower vehicle.

CENTER BEARING REPLACEMENT

Remove or Disconnect

- Raise vehicle and support with suitable safety stands.

1. Rear propeller shaft. Refer to "Propeller Shaft Replacement" in this section.
2. Front or intermediate propeller shaft.
3. Center bearing.
   - Stand propeller shaft on end in press with center bearing supported by press bars.
   - Press propeller shaft down and off center bearing.

Install or Connect (Figure 7)

1. Center bearing onto propeller shaft.
   - Press center bearing onto shaft using a press.
2. Front or intermediate propeller shaft.

Important

- Center bearing must be aligned to prevent damage to propeller shaft assembly.
- When bolting center bearing in place, be sure to keep it perpendicular (90° ± 1°) to the propeller shaft. See figure 7.

3. Rear propeller shaft. Refer to "Propeller Shaft Replacement" in this section.

NOTICE: See "Notice" on page 4A-1 of this section.

Tighten

- All fasteners to "Specifications" at the end of this section.

4. Remove safety stands and lower vehicle.

CONSTANT VELOCITY JOINT REPLACEMENT

Remove or Disconnect (Figures 14 and 15)

- Raise vehicle and support with suitable safety stands.

1. Front propeller shaft (106). Refer to "Propeller Shaft Replacement" in this section.
   - Clamp shaft in vise.

Important

The original equipment C.V. joint is held together by hot injected plastic at all trunnion to yoke attaching points and must be heated to melt the plastic to remove trunnion.

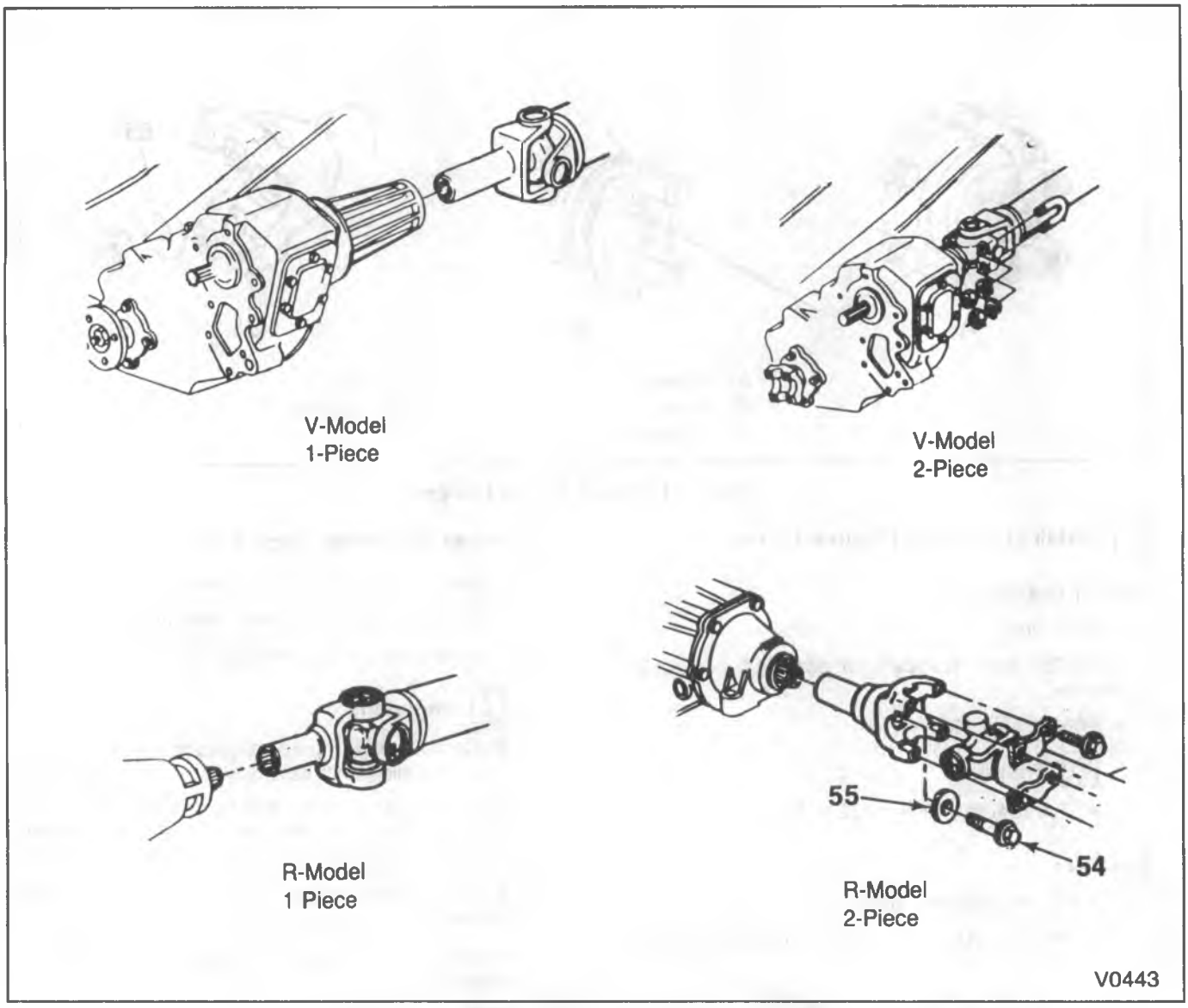

Figure 12—R/V Models Front Yoke Assemblies

2. Trunnion (107) from link yoke (105).
   - Heat area around bearing cap until the plastic melts and flows out of relief hole in the yoke. Use a socket with a diameter smaller than the bearing cup (108) and tap the bearing cup through the yoke. Once the bearing cup is driven out of the yoke part-way, it can be removed using a pair of pliers by grabbing it and twisting.
   - Repeat step to remove the opposite bearing cup.
3. Trunnion (107) from the rear support yoke (102).
   - Follow instructions for U-joint trunnion removal in step 2.
4. Trunnion (111) from the link yoke (105).
   - Follow instructions for U-joint trunnion removal in step 2.
5. Trunnion (111) from the front propeller shaft.
   - Follow instructions for U-joint trunnion removal in step 2.
6. Seal and bearing shoes (part of 104) from the rear support yoke (if being replaced).
7. Ball (part of 104) if being replaced, using J 23996. See figure 15.
   - Disassemble tool J 23996 and install J 23996-3 onto ball. Install J 23996-4 and then install nut. While holding J 23996-3 with a 3/8 inch wrench, use a 1-1/16 inch wrench and turn the nut clockwise to remove the ball off the stud.

Clean

- Yokes of all grease and excess plastic.

Inspect

- All parts for damage or wear. Replace any part that appears defective.

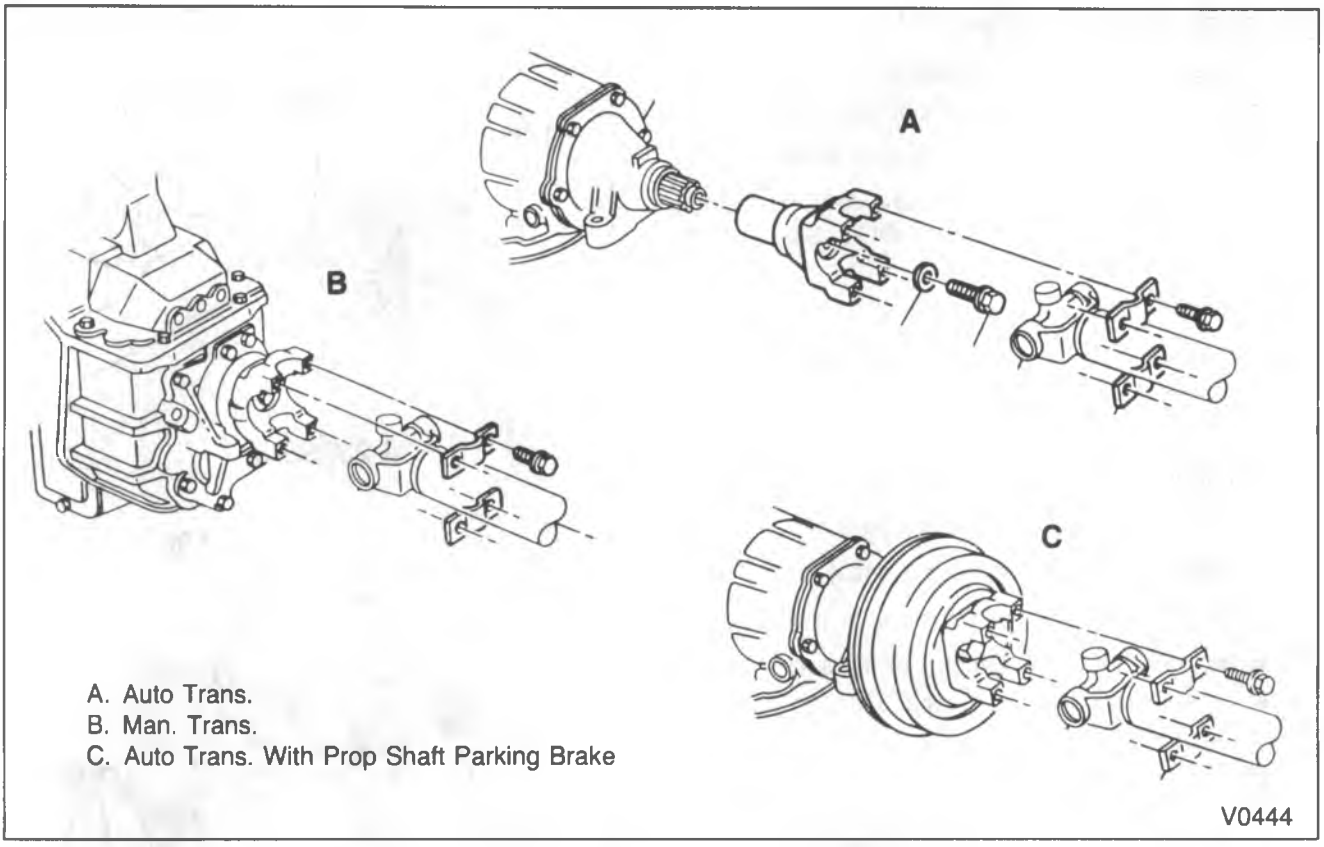

Figure 13—P Model Front Yoke Assemblies

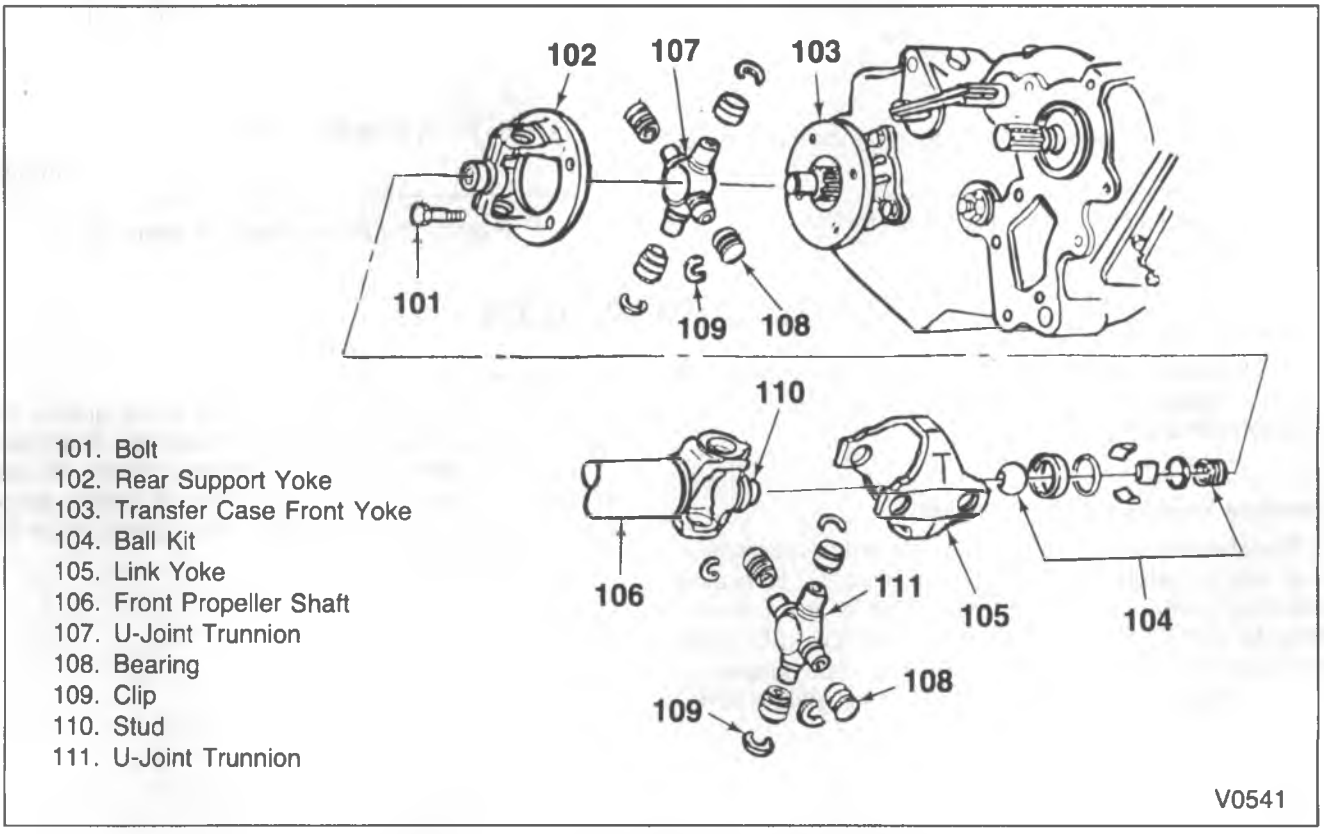

Figure 14—Constant Velocity Joint Assembly

Install or Connect (Figure 14)

1. Ball (part of 104) onto stud using a brass hammer.
2. Shoes and seal (part of 104) into rear support yoke.
3. Trunnion (111) into front propeller shaft yoke.
   - Set trunnion into yoke ears and start the bearing cups by hand. Tap on the bearing cups to drive them onto the trunnion.
4. Clips (109).
   - Clips go inside the yoke ears and snap over the bearing cup.
5. Link yoke (105) and trunnion (111).
   - Follow instructions in steps 3 and 4.
6. Trunnion (107) into rear support yoke.
   - Follow instructions in steps 3 and 4.
7. Rear support yoke with trunnion onto link yoke.
   - Be sure that ball engages into the socket.
   - Follow instructions in steps 3 and 4 to install bearing cups.

Inspect

- Movement of the C.V. joint. If it is tight, rap the yokes with a brass hammer to seat the bearings. This should free up the joint.

8. Front propeller shaft. Refer to "Propeller Shaft Replacement (Front Drive)" in this section.

Lubricate

- C.V. joint assembly. Refer to "Lubrication" in this section.
- Remove safety stands and lower vehicle.

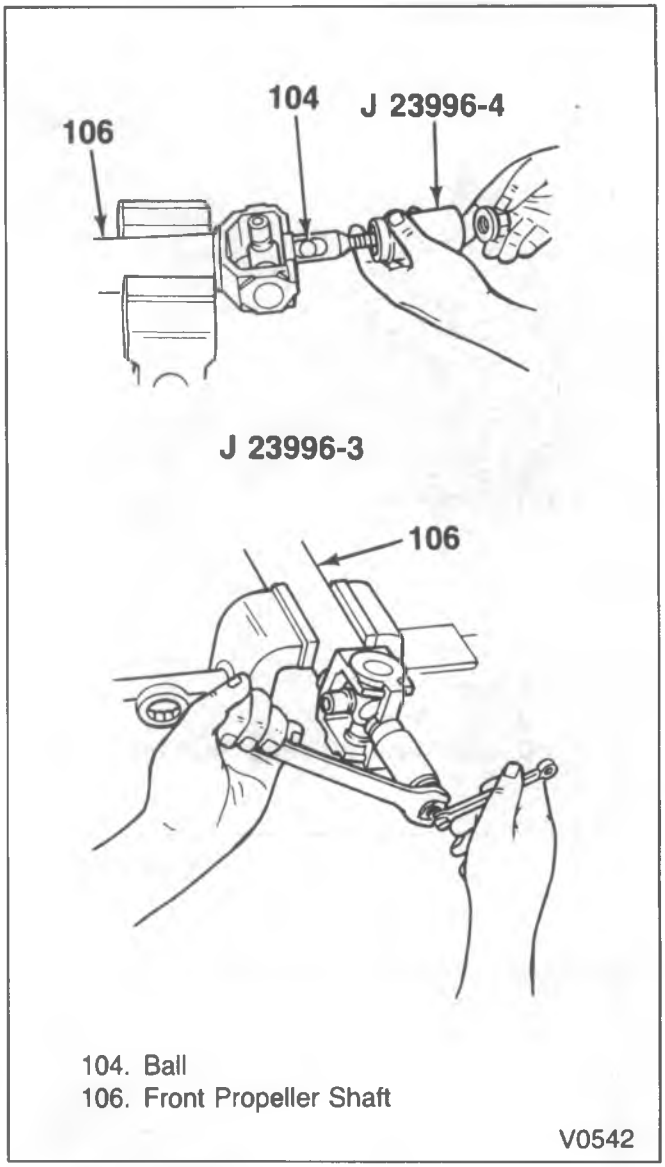

Figure 15—Removing C.V. Joint Ball

LUBRICATION

The front axle propeller shaft found on four-wheel drive vehicles requires lubricant at two locations: the constant velocity joint and the slip yoke.

Constant Velocity Joint (C/V Joint)

The constant velocity (C/V) joint, located at the transfer case end of the front propeller shaft, must be lubricated periodically with a special lubricant, 1050679 or equivalent. Refer to MAINTENANCE AND LUBRICATION (SEC. 0B) for lubrication interval. Use a "needlenose" type adaptor on the end of a flex hose to gain access to the grease fitting.

Slip Spline

Apply chassis lubricant at the slip spline grease fitting until the grease begins to leave through the vent hole.

If the slip spline is dry or corroded, it may be necessary to disconnect the propeller shaft from the vehicle, remove the slip yoke and wire brush the affected area. Wipe clean before installation.

SPECIFICATIONS

Application	Model	Torque	
		N·m	Ft. Lbs.
One-Piece Propeller Shaft			
Bolts to Rear Axle Yoke	R/V	20	15
Two or Three-Piece Propeller Shaft; Front			
Hex-Head Bolts to Transmission Yoke	R/V, P	20	15
Hex-Head Bolts to Parking Brake Drum Yoke	P	20	15
Nuts to Parking Brake Drum Studs	P	27	20
Two or Three-Piece Propeller Shaft; Rear			
Hex-Head Bolts to Rear Axle Yoke	R/V, P	20	15
Torx-Head Bolts to Rear Axle Yoke	R/V	35	26
Nuts to Rear Axle Yoke U-Bolt Retainers	P	27	20
Three-Piece Propeller Shaft; Intermediate			
Torx-Head Bolts to Front Propeller Shaft Yoke	P	35	26
Center Bearing Support(s)			
Bolts/Nuts to Frame Hanger(s)	R/V	40	30
	P	53	39
Transfer Case to Front Axle Propeller Shaft			
Hex-Head Bolts to Front Axle Yoke	V	20	15
Hex-Head Bolts to Transfer Case Output Flange	V	110	81
Skid Plate			
Bolts/Nuts to Frame	R/V	26	19
Hex-Head Bolt Yoke to Output Shaft	R/V, P	110	81

GMTB-3035-2A

PARTS INFORMATION

PART NAME	GROUP
Propeller Shaft	5.544
Slip Yoke	5.555
U-Joint Yoke	5.555
Joint Kit	5.548
Hanger	5.598
Dust Cap and Washer	5.556
Slip Joint Seal	5.560

GMTB-3183-2A

SECTION 4B1

REAR AXLE

***NOTICE:** When fasteners are removed, always reinstall them at the same location from which they were removed. If a fastener needs to be replaced, use the correct part number fastener for that application. If the correct part number fastener is not available, a fastener of equal size and strength (or stronger) may be used. Fasteners that are not reused and those requiring thread locking compound will be called out. The correct torque value must be used when installing fasteners that require it. If the above conditions are not followed, parts or system damage could result.*

CONTENTS

SUBJECT	PAGE
Description	4B1- 1
Rear Axle Operation	4B1- 1
Diagnosis	4B1- 2
Determining the Type of Noise	4B1- 2
On-Vehicle Service	4B1- 9
Rear Axle Assembly Replacement (All Axles)	4B1- 9
Semi-Floating Axle (8 1/2- and 9 1/2-Inch Ring Gear)	4B1- 9
Axle Shaft, Oil Seal and Bearing Replacement	4B1- 9
Brake Backing Plate Replacement	4B1-12
Wheel Stud Replacement	4B1-13
Pinion Flange, Dust Deflector/Oil Seal Replacement	4B1-13
Dana Full-Floating Axle (9 3/4- and 10 1/2-Inch Ring Gear)	4B1-15
Axle Shaft Replacement	4B1-15
Hub and Drum Assembly Replacement	4B1-16
Wheel Bearing/Cup Replacement	4B1-17
Non-Demountable Type Drum Replacement	4B1-19
Wheel Stud Replacement	4B1-19
Wheel Bearing Adjustment	4B1-19
Pinion Oil Seal/Pinion Flange Replacement	4B1-20
Rockwell Full-Floating Axle (12-Inch Ring Gear)	4B1-21
Axle Vent Replacement	4B1-21
Axle Shaft Replacement	4B1-21
Bearing Adjustment	4B1-22
Pinion Oil Seal/Pinion Flange Replacement	4B1-23
Specifications	4B1-24
Axle Identification	4B1-25
Special Tools	4B1-27

DESCRIPTION

Light duty trucks use various rear axles. These axles can be identified by ring gear size in inches, by manufacturer (Corporate, Dana, or Rockwell) and by the type of axle shaft used (Semi-Floating or Full-Floating). Corporate axles include the 8 1/2, 9 1/2- and 10 1/2-inch ring gear axles. Dana also supplies a 10 1/2-inch ring gear axle as well as a 9 3/4-inch ring gear axle. The 12-inch ring gear axle is supplied by Rockwell, and uses rear wheel disc brakes. Saginaw supplies 10 1/2-inch ring gear.

REAR AXLE OPERATION

A basic differential has a set of four gears. Two are called differential side gears (5) and the other two are called differential pinion gears (7). Some differentials have more than two pinions. Each side gear is splined to an axle shaft (4); therefore, each axle shaft must turn when its side gear rotates. Refer to figure 1.

The differential pinion gears are mounted on a differential pinion shaft, (6) and the gears are free to rotate on this shaft. The pinion shaft is fitted into a bore in the differential case (3) and is at right angles to the axle shafts.

Power flow through the differential is as follows: the drive pinion (1) rotates the ring gear (2). The ring gear, being bolted to the differential case, (3) rotates the case. The differential pinion, (6) as it rotates with the case, forces the pinion gears (7) against the side gears (5). When both wheels have equal traction, the pinion gears (7) do not rotate on the pinion shaft (6) because the input force on the pinion gear is equally divided between the two side gears. Therefore, the pinion gears revolve with the pinion shaft, but do not rotate around the shaft itself. The side gears, (5)

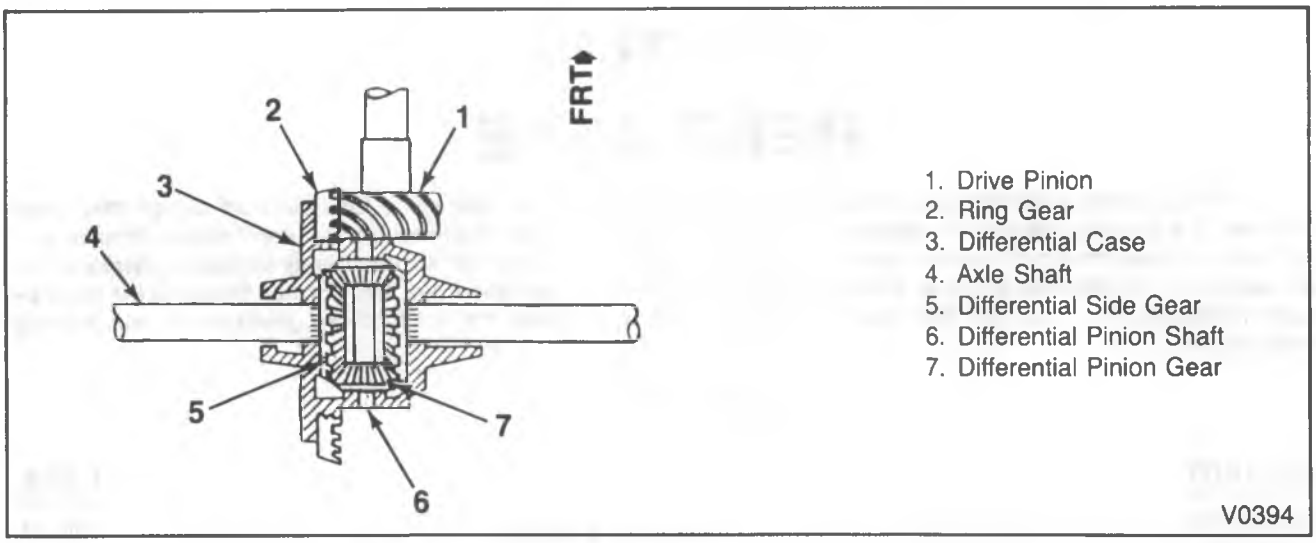

Figure 1—Differential Main Components

being splined to the axle shafts (4) and in mesh with the pinion gears, (7) rotate the axle shafts (4).

If a vehicle were always driven in a straight line, the ring and pinion gears would be sufficient. The axle shaft could then be solidly attached to the ring gear and both driving wheels would turn at equal speeds.

However, if it became necessary to turn a corner, the tires would scuff and slide because the outside wheel would travel farther than the inside wheel. To prevent tire scuffing and sliding, the differential becomes effective and allows the axle shafts to rotate at different speeds.

When the vehicle turns a corner, the outer wheel must turn faster than the inner wheel. The inner wheel turns slower than the outer wheel and slows its axle side gear, since the axle shaft is splined to the side gear. The axle pinion gears will roll around the slowed axle side gear, driving the other axle side gear and wheel faster.

DIAGNOSIS

The most essential part of rear axle service, as with any mechanical repair, is proper diagnosis of the problem. In axle work, one of the most difficult areas to diagnose is noise. Locating a broken axle shaft or broken differential gear presents little or no problem, but locating and isolating axle noise can be an entirely different matter.

Degree of Noise

Any gear-driven unit, especially an automotive drive axle where engine torque multiplication occurs at a 90 degree turn in the driveline, produces a certain amount of noise. Therefore, an interpretation must be made for each vehicle to determine whether the noise is normal or if a problem actually exists. A normal amount of noise must be expected and cannot be eliminated by conventional repairs or adjustment.

Acceptable noise can be defined as a slight noise heard only at a certain speed or under unusual or remote conditions. For example, this noise tends to reach a "peak" at speeds from 40 to 60 miles per hour (60 to 100 km/h) depending on road and load conditions, or on gear ratio and tire size. This slight noise is in no way indicative of trouble in axle assembly.

Driveline noises may baffle even the best diagnostician. Vehicle noises coming from tires, transmission, propeller shaft, universal joints, and front or rear wheel bearings are often mistaken for axle noise. Such practices as: raising tire pressure to eliminate tire noise (although this will not silence tread noise of mud and snow tires), listening for the noise at varying speeds and road surfaces, and on drive, float, and coast conditions will aid in locating the source of alleged axle noises. Thus, every effort should be made to isolate the noise to a specific driveline component instead of making a random guess that could be a costly waste of time.

DETERMINING THE TYPE OF NOISE

External Noise

When a rear axle is suspected of being noisy, it is advisable to make a thorough test to determine whether the noise originates in the tires, road surface, front wheel bearings, engine, transmission or rear axle assembly. Noise which originates in other places cannot be corrected by adjustment or replacement of parts in the rear axle assembly.

Road Noise — Some road surfaces, such as brick or rough-surfaced concrete, cause noise which may be mistaken for tire or rear axle noise. Driving on a different type of road, such as smooth asphalt or dirt, will quickly show whether the road surface is the cause of noise. Road noise usually is the same on drive or coast.

Tire Noise — Tire noise may easily be mistaken for rear axle noise, even though the noisy tires may be located on the front wheels. Tires worn unevenly, or having surfaces on non-skid divisions worn in saw-tooth fashion, are usually noisy and may produce vibrations which seem to originate elsewhere in the vehicle. This is particularly true with low tire pressure.

Tire Noise Test — Tire noise changes with different road surfaces, but rear axle noise does not. Temporarily inflating all tires to 345 kilopascals (50 pounds per square inch) pressure, **for test purposes only** will materially alter noise caused by tires but will not affect noise caused by the rear axle. Rear axle noise usually stops when coasting at speeds under 30 miles per hour; however, tire noise continues but with lower tone as the vehicle speed is reduced. Rear axle noise usually changes when comparing "pull" and "coast" but tire noise remains about the same.

Engine and Transmission Noises — Sometimes a noise which seems to originate in the rear axle is actually caused by the engine or transmission. To determine which unit is actually causing the noise, observe approximate vehicle speeds and conditions under which the noise is most pronounced; then stop the vehicle in a quiet place to avoid interfering noises. With the transmission in neutral, run the engine slowly up and down through the engine speeds corresponding to the vehicle speed at which the noise was most pronounced. If a similar noise is produced with the vehicle standing, it is caused by the engine or transmission and not the rear axle.

Front Wheel Bearing Noise — Loose or rough front wheel bearings will cause noise which may be confused with rear axle noise; however, front wheel bearing noise does not change when comparing "pull" and "coast". Light application of the brake, while holding the vehicle speed steady, will often cause the wheel bearing noise to diminish, as this takes some weight off of the bearing. Front wheel bearings may be easily checked for noise by jacking up the wheels and spinning them, and also by shaking the wheels to determine if the bearings are excessively loose.

Body Boom Noise or Vibration — Objectionable "body boom" noise or vibration at 55-65 mph (90-100 km/h) can be caused by an unbalanced propeller shaft. Excessive looseness at the spline can contribute to this unbalance.

Other items that may also contribute to the noise problem are as follows:

1. Undercoating or mud on the shaft, causing unbalance.
2. Shaft or pinion flange balance weights missing.
3. Shaft damage, such as bending, dents or nicks.
4. Tire-type roughness. Switch tires from a known good vehicle to determine a tire fault.

   If, after making a comprehensive check of the vehicle, all indications point to the rear axle, further diagnostic steps are necessary to determine the axle components at fault. True rear axle noise generally falls into two categories: gear noise and bearing noise.

Rear Axle Noises

If a careful test of the vehicle shows that the noise is not caused by external items, it is then reasonable to assume that noise is caused by the rear axle assembly. Test the rear axle on a smooth level road to avoid road noise. It is not advisable to test the rear axle for noise by running with the rear wheels jacked up.

Noise in the rear axle assembly may be caused by a damaged or unbalanced propeller shaft, rough rear wheel bearings, worn or damaged differential or pinion shaft bearings, misalignment between two U-joints or worn differential side gears and pinions. Noise may also be caused by a mismatched, improperly adjusted or scored ring and pinion gear set.

Rear Wheel Bearing Noise — A rough rear wheel bearing produces a vibration or growl which continues with the vehicle coasting and the transmission in neutral. A brinelled rear wheel bearing causes a knock or click approximately every two revolutions of the rear wheel, since the bearing rollers do not travel at the same speed as the rear axle and wheel. With the rear wheels jacked up, spin the rear wheels by hand while listening at the hubs for evidence of a rough or brinelled wheel bearing.

Differential Side Gear and Pinion Noise — Differential side gears and pinions seldom cause noise since their movement is relatively slight on straight-ahead driving. Noise produced by these gears will be most pronounced on turns.

Pinion Bearing failures can be distinguished because they rotate at higher speeds than differential side bearings and axle shaft bearings. Rough or brinelled pinion bearings produce a continuous low pitched whirring or scraping noise starting at a low speed.

Side Bearings produce a constant rough noise pitched lower than pinion bearing noise. Side bearing noise may also fluctuate in the above rear wheel bearing test.

Gear Noise

There are two basic types of gear noise. The first type is produced by broken, bent, or forcibly damaged gear teeth and is usually quite audible over the entire speed range and presents no particular problem in diagnosis. For example, hypoid gear tooth scoring generally results from the following: insufficient lubricant, improper break-in, improper lubricant, insufficient gear backlash, improper ring and pinion gear alignment, or loss of drive pinion nut torque. The scoring will progressively lead to complete erosion of the gear tooth, or gear tooth pitting and eventual fracture if the initial scoring condition is not corrected (figure 2). Another cause of hypoid tooth fracture is extended overloading of the gear set which will produce fatigue fracture, or shock loading which will result in sudden failure.

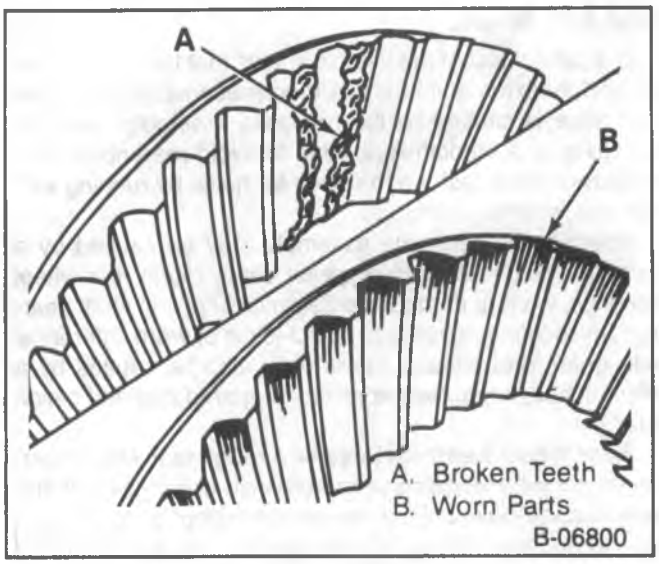

Figure 2—Causes of Gear Noise

Differential pinion and side gears rarely give trouble. Common causes of differential failure are shock loading, extended overloading, and seizure of the differential pinions to the cross shaft resulting from excessive wheel spin and consequent lubrication breakdown. The second type of gear noise pertains to the mesh pattern of the gear teeth. This form of abnormal gear noise can be recognized because it produces a cycling pitch (whine) and will be very pronounced in the speed range at which it occurs, appearing under either "drive," or "float" or "coast" conditions. "Drive" is acceleration or heavy pull. "Coast" is with a closed throttle and the vehicle in gear and "float" is using just enough throttle to keep the vehicle from driving the engine; the vehicle slows down gradually but the engine still pulls slightly. Gear noise tends to peak in a narrow speed range of ranges, and will tend to remain constant in pitch. Bearing noise will vary in pitch with vehicle speeds.

Refer to figures 3 through 6 for bearing diagnosis.

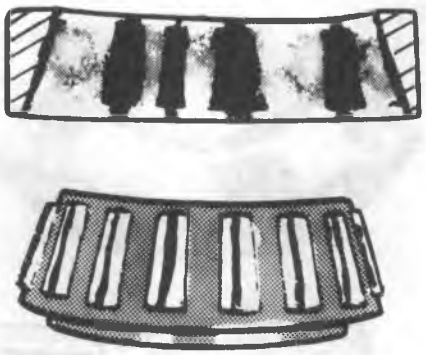

ABRASIVE ROLLER WEAR

Pattern on races and rollers caused by fine abrasives.
Clean all parts and housings, check seals and bearings and replace if leaking, rough or noisy.

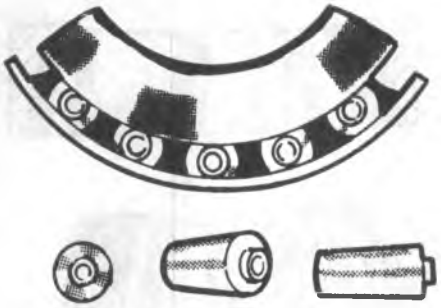

ABRASIVE STEP WEAR

Pattern on roller ends caused by fine abrasives.
Clean all parts and housings, check seals and bearings and replace if leaking, rough or noisy.

GALLING

Metal smears on roller ends due to overheat, lubricant failure or overload.
Replace bearing, check seals and check for proper lubrication.

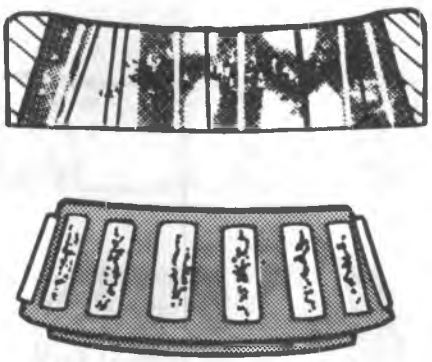

ETCHING

Bearing surfaces appear gray or grayish black in color with related etching away of material usually at roller spacing.
Replace bearings, check seals and check for proper lubrication.

B-09194

Figure 3—Diagnosis of Tapered Roller Bearings

BENT CAGE

Cage damaged due to improper handling or tool usage.
Replace bearing.

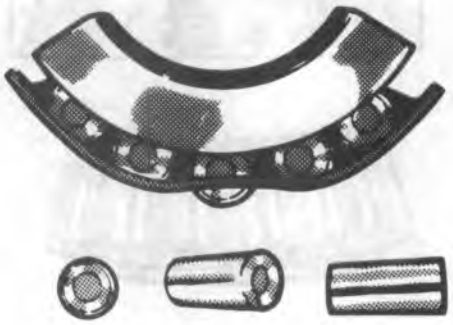

BENT CAGE

Cage damaged due to improper handling or tool usage.
Replace bearing.

CAGE WEAR

Wear around outside diameter of cage and roller pockets caused by abrasive material and inefficient lubrication.
Clean related parts and housings.
Check seals and replace bearings.

INDENTATIONS

Surface depressions on race and rollers caused by hard particles of foreign material.
Clean all parts and housings. Check seals and replace bearings if rough or noisy.

B-09195

Figure 4—Diagnosis of Tapered Roller Bearings

FRETTAGE

Corrosion set up by small relative movement of parts with no lubrication.
Replace bearing. Clean related parts. Check seals and check for proper lubrication.

SMEARS

Smearing of metal due to slippage. Slippage can be caused by poor fits, lubrication, overheating, overloads or handling damage. Replace bearings, clean related parts and check for proper fit and lubrication.

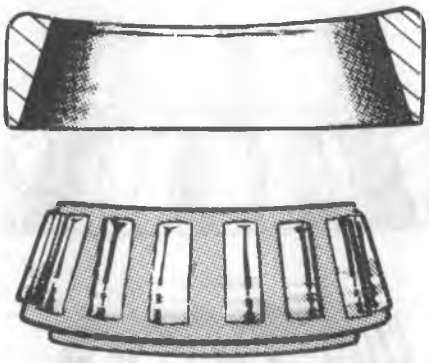

STAIN DISCOLORATION

Discoloration can range from light brown to black caused by incorrect lubricant or moisture.
Re-use bearings if stains can be removed by light polishing or if no evidence of overheating is observed.
Check seals and related parts for damage.

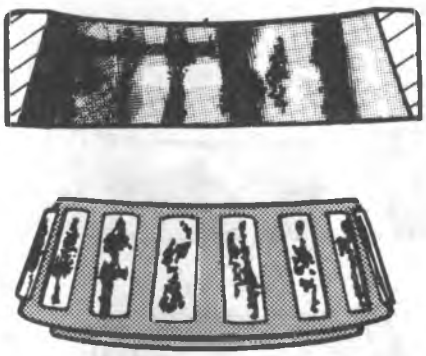

HEAT DISCOLORATION

Heat discoloration can range from faint yellow to dark blue resulting from overload or incorrect lubricant.
Excessive heat can cause softening of races or rollers. To check for loss of temper on races or rollers a simple file test may be made. A file drawn over a tempered part will grab and cut metal, whereas, a file drawn over a hard part will glide readily with no metal cutting.
Replace bearings if over heating damage is indicated. Check seals and other parts.

F-00531

Figure 5—Diagnosis of Tapered Roller Bearings

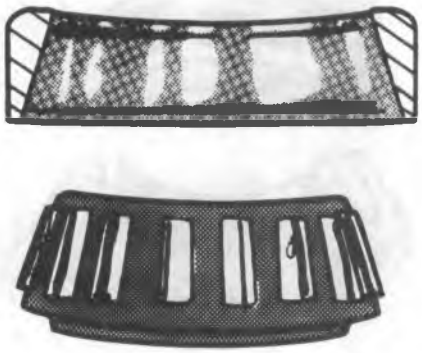

MISALIGNMENT

Outer race misalignment due to foreign object.
Clean related parts and replace bearing. Make sure races are properly seated.

CRACKED INNER RACE

Race cracked due to improper fit, cocking, or poor bearing seats.
Replace bearing and correct bearing seats.

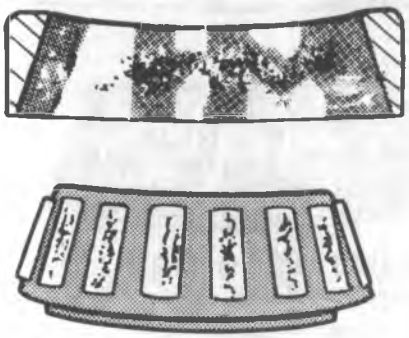

FATIGUE SPALLING

Flaking of surface metal resulting from fatigue.
Replace bearing, clean all related parts.

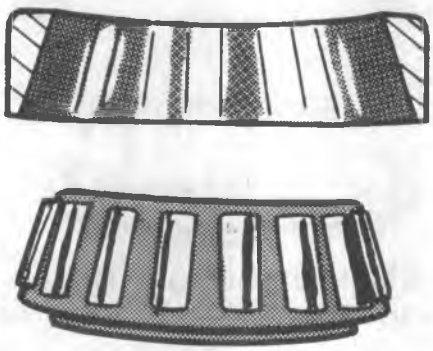

BRINELLING

Surface indentations in raceway caused by rollers either under impact loading or vibration while the bearing is not rotating.
Replace bearing if rough or noisy.

B-09860

Figure 6—Diagnosis of Tapered Roller Bearings

ON-VEHICLE SERVICE

The following rear axle procedures apply to vehicles equipped with rear drum brakes. However, if the model to be serviced has rear disc brakes, refer to HYDRAULIC FOUNDATION BRAKES (SEC. 5A2) for the appropriate brake-related procedures.

REAR AXLE ASSEMBLY REPLACEMENT (ALL AXLES)

Remove or Disconnect

- Raise the vehicle on a hoist and support the axle assembly with a suitable lifting device.
- For 9 3/4-inch ring gear and 10 1/2-inch ring gear axles, raise the vehicle and place jack stands under the frame side rails for support.
- Drain the lubricant from the axle housing.

1. Propeller shaft. Refer to PROPELLER SHAFT (SEC. 4A).
2. Wheel and tire assembly.
3. Brake drum or hub and drum.
4. Parking brake cable from the lever and at the brake flange plate.
5. Hydraulic brake lines from the connectors.
6. Shock absorbers from the axle brackets.
7. Vent hose from the axle vent fitting (if equipped).
8. Height-sensing and brake proportioning valve linkage (if equipped).
9. Stabilizer bar (if equipped). Refer to REAR SUSPENSION (SEC. 3D).

- Support the assembly with a hydraulic floor jack.

10. Nuts and washers from the U-bolts.
11. U-bolts, spring plates and spacers from the axle assembly.

- Lower the jack and the axle assembly.

Install or Connect

1. Axle assembly under the vehicle.
   - Align the axle assembly with the springs.
2. Spacers, spring plates and U-bolts to the axle assembly.

- Raise the axle assembly.

3. Washers and nuts to the U-bolts.
   - Thread the nuts on firmly.
   - Adjust alignment of axle.
4. Stabilizer bar (if equipped). Refer to REAR SUSPENSION (SEC. 3D).
5. Height-sensing and brake proportioning valve linkage (if equipped).
6. Vent hose to the axle vent fitting (if equipped).
7. Shock absorbers to the axle brackets.
8. Hydraulic brake lines to the connectors.
9. Parking brake cable to the lever and the flange plate.
10. Wheel and tire assembly.
11. Brake drum or hub and drum.
12. Propeller shaft. Refer to PROPELLER SHAFT (SEC. 4A).

NOTICE: See "Notice" on page 4B1-1 of this section.

Tighten

- All fasteners. Refer to "Specifications" at the end of this section.

13. Axle lubricant. Fill to filler plug hole level. Refer to MAINTENANCE AND LUBRICATION (SEC. 0B).

Important

- Bleed the brake system, check operation and adjust if necessary. Refer to HYDRAULIC BRAKES (SEC. 5A).
- Remove jack stands and lower vehicle.
- Check axle and brake operation.
- Check for fluid leaks and road test the vehicle.

SEMI-FLOATING AXLE (8 1/2- AND 9 1/2-INCH RING GEAR)

AXLE SHAFT, OIL SEAL AND BEARING REPLACEMENT

Remove or Disconnect (Figures 7 through 14)

Tools Required:

J 2619-01 Slide Hammer with Adapter

J 23689 Axle Shaft Bearing Remover (8 1/2-inch ring gear)

J 29712 Axle Shaft Bearing Remover (9 1/2-inch ring gear)

- Raise the vehicle on a hoist.
- Clean dirt from around the carrier cover.

1. Wheel and tire assembly.
2. Brake drum (10).
3. Carrier cover (19).
   - Catch the oil in a drain pan.
   - Remove gasket material.
4. Screw (A) (figures 8 and 9).
5. Pinion shaft (B).
   - Remove the shaft (B) from the case on vehicles without a locking differential.

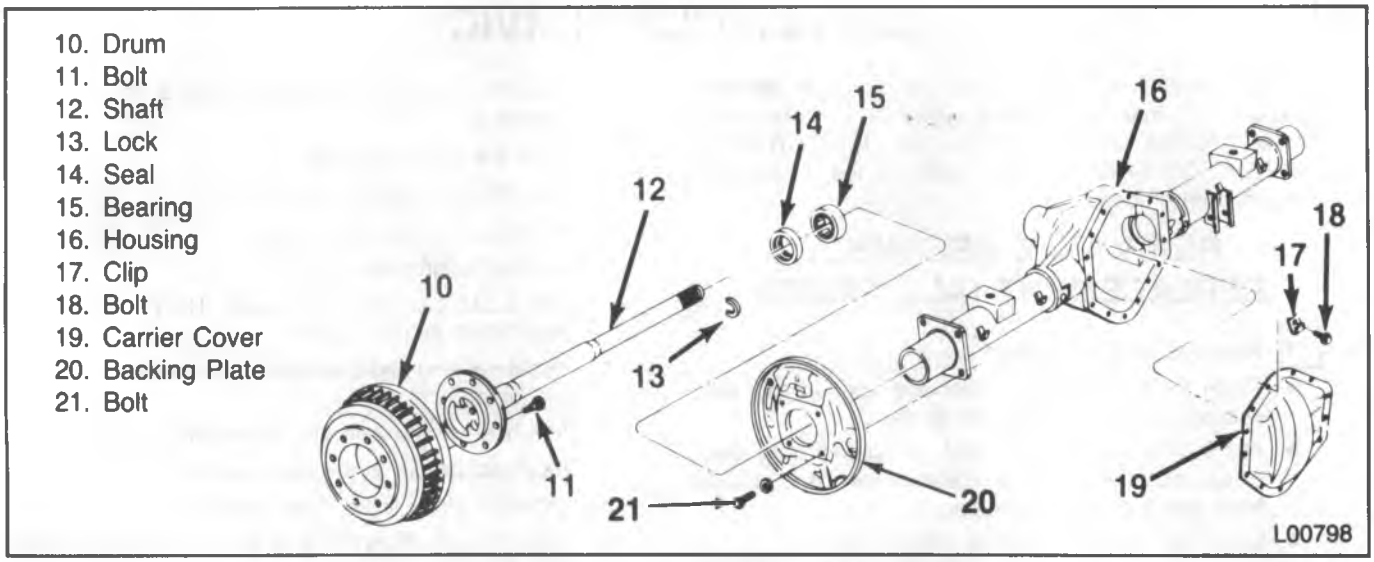

Figure 7—Axle Shaft and Housing Components

- With a locking differential, partially remove the shaft (B) and rotate the case until the pinion shaft (B) touches the housing (figure 10).
- Use a screwdriver or similar tool to enter the case and rotate the lock (G) until it aligns with the thrust block (E) (figure 11).

6. Lock (13).
   - Push the flange of the axle shaft towards the differential. Do not force or hammer the shaft to move the shaft (figure 12).
   - Remove the lock (G) from the button end of the axle shaft (12).
7. Axle shaft (12).
   - Slide the axle shaft (12) out, being careful not to damage the seal.
8. Seal (14) using J 23689 (figure 13).
9. Bearing (15).
   - Use J 23689 for 8 1/2-inch ring gear axle (figure 12) or J 29712 for 9 1/2-inch ring gear (figure 14) to pull the bearing (15) from the axle.
   - Insert the bearing removal tool into the axle bore so that it grasps behind the bearing (15) (figures 13 and 14). Tighten the nut and washer against the face of the bearing (15).
   - Withdraw the bearing (attached to the removal tool) using J 2619-01.

Inspect

- Axles for straightness, axle shaft splines, for any wear (burrs, chips, cracks or wear).
- Bearings for any abnormal wear. See figures 3 through 6 for bearing diagnosis.
- Seals for wear (torn, roughness, leaking). Replace any part that shows signs of wear.

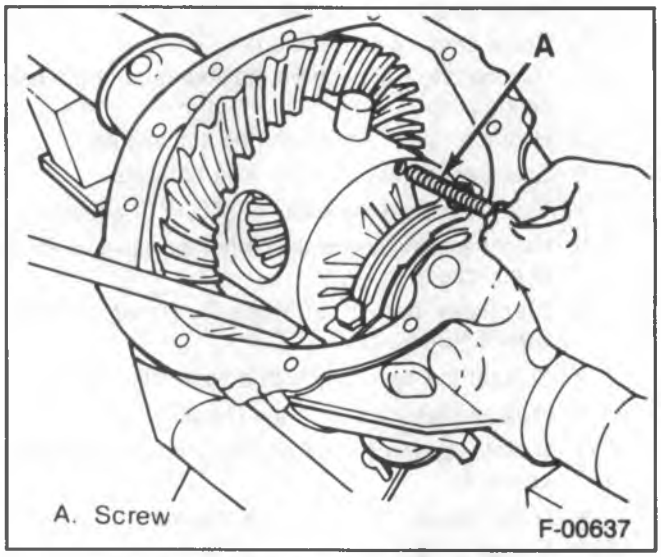

Figure 8—Removing the Lock Screw

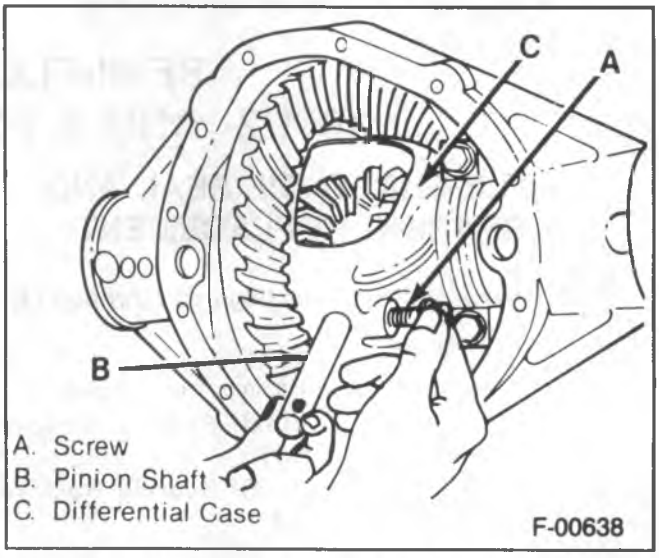

Figure 9—Removing/Installing the Differential Pinion

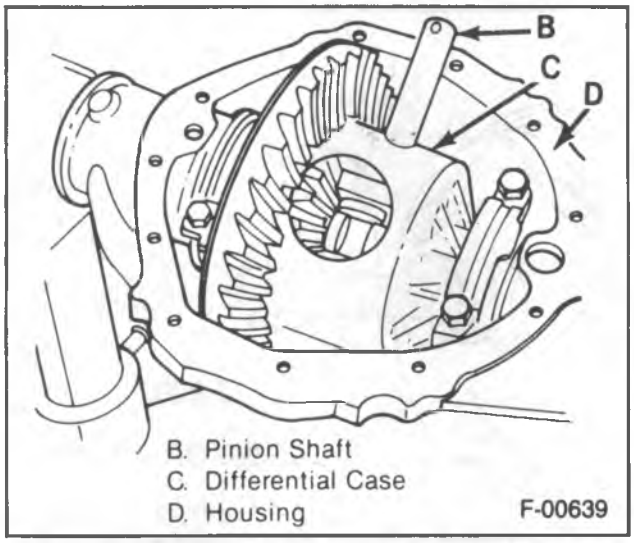

Figure 10—Positioning the Case for Best Clearance

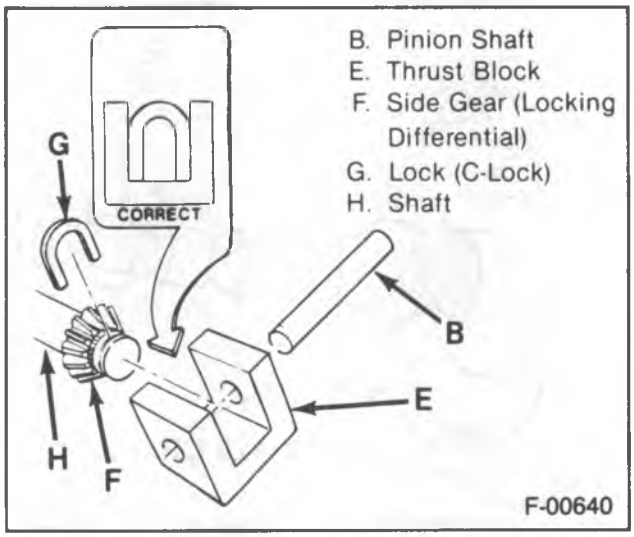

Figure 11—Aligning the Lock

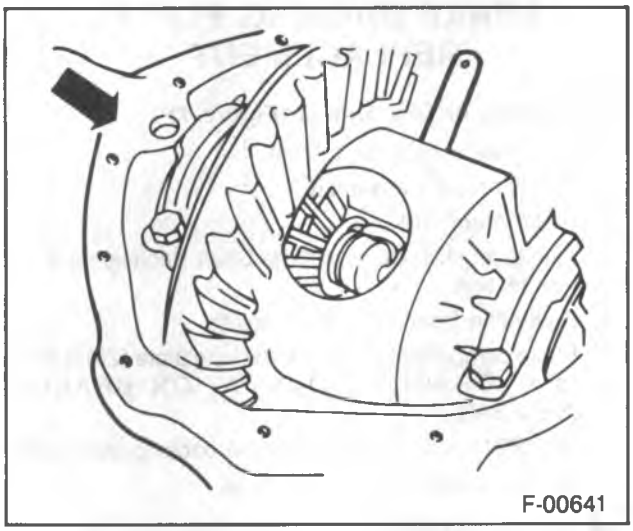

Figure 12—Pushing the Axle Shaft Inward

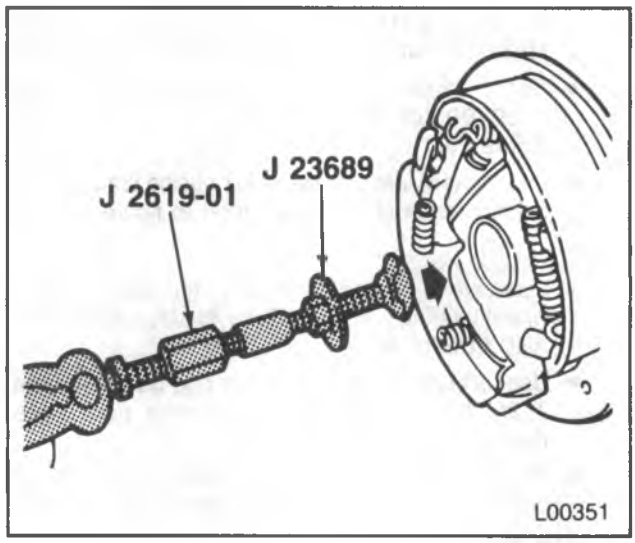

Figure 13—Removing the Bearing and Seal

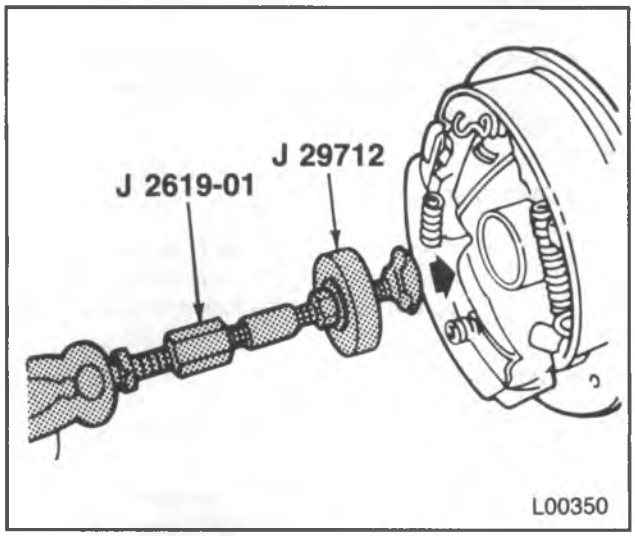

Figure 14—Removing the Wheel Bearing

Install or Connect (Figures 7, 9, 10, 11, 15 and 16)

NOTICE: For steps 6 and 7 see "Notice" on page 4B1-1 of this section.

Tools Required:

J 8092 Driver Handle

J 21128 Axle Shaft and Pinion Oil Seal Installer

J 23690 Axle Shaft Bearing Installer (8 1/2-inch ring gear)

J 29709 Axle Shaft Bearing Installer (9 1/2-inch ring gear)

J 29713 Axle Shaft Seal Installer (9 1/2-inch ring gear)

- Lubricate the axle cavity between the seal (14) lips and the bearing (15) with wheel bearing lubricant. Refer to MAINTENANCE AND LUBRICATION (SEC. 0B).

1. Bearing (15).
   - Lubricate the inside diameter of the bearing (15) with wheel bearing lubricant. Refer to MAINTENANCE AND LUBRICATION (SEC. 0B).

- Dip bearing (15) in rear axle lubricant. Refer to MAINTENANCE AND LUBRICATION (SEC. 0B).
- Use J 23690 for the 8 1/2-inch gear axle and J 29709 for the 9 1/2-inch ring gear axle (figure 15).
- Bearing (15) into the axle (16) housing until the tool bottoms against the tube. Refer to figure 15.

2. Seal (14).
   - Lubricate the inside diameter of the seal (14) with wheel bearing lubricant. Refer to MAINTENANCE AND LUBRICATION (SEC. 0B).
   - Use J21128 for the 8 1/2-inch ring gear axle and J 29713 for the 9 1/2-inch ring gear axle (figure 16).
   - Drive the tool into the bore until the seal (14) bottoms flush with the end of the tube (figure 16).
3. Axle shaft (12).
   - Be careful not to damage the seal (14) when inserting the axle shaft (12).
   - Slide the axle shaft (12) into place, allowing the splines to engage the differential side gear (F) (figure 11).
4. Lock (13).
   - Without locking differential:
     - Place the lock on the button end of the axle shaft (12), then pull the shaft flange outward to seat the lock in the differential side gear.
   - With locking differential:
     - Keep the pinion shaft (B) partially withdrawn (figure 10).
     - Place the lock (G) in the position shown in figure 11. Pull the shaft flange outward to seat the lock (G) in the differential side gear (F).
5. Pinion shaft (B) (figure 9).
   - Align the hole in the pinion shaft (H) with the screw hole in the differential case (C).
6. Screw (A) (figure 9).

Tighten

- Screw (A) to 34 N•m (25 ft. lbs.).

7. Carrier cover gasket (if used) or RTV.
8. Carrier cover (19).
9. Bolts (18) and clip (17).

Tighten

- Bolts (18) in a crosswise pattern. Refer to "Specifications" at the end of this section.

10. Brake drum (10).
11. Wheel and tire assembly.
12. Axle lubricant. Fill to the filler plug hole level. Refer to MAINTENANCE AND LUBRICATION (SEC. 0B).

- Lower the vehicle.

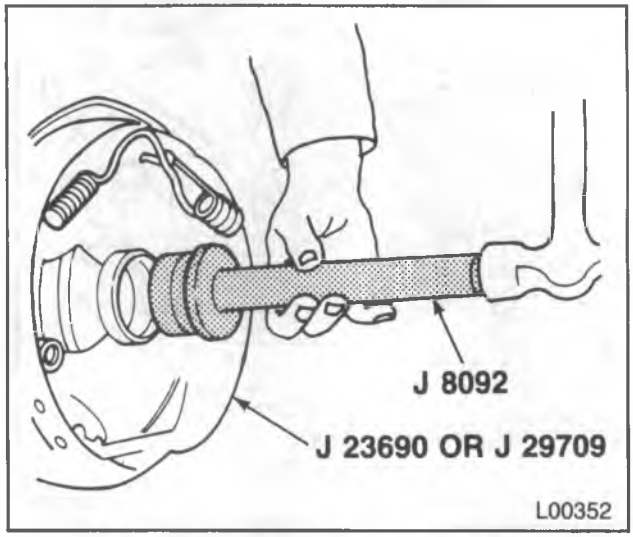

Figure 15—Installing the Wheel Bearing

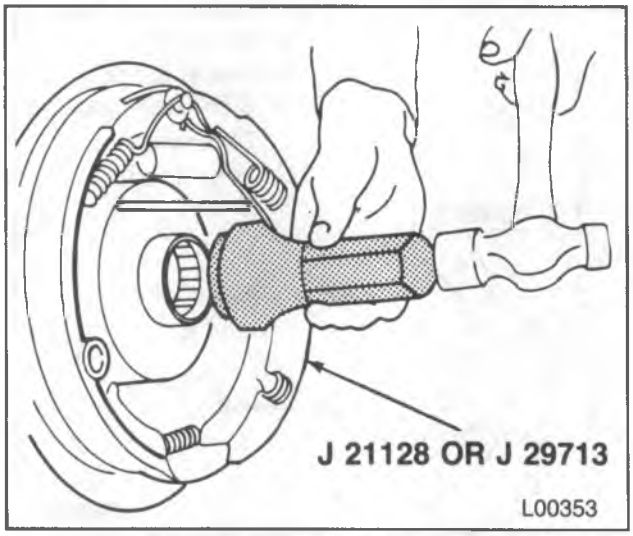

Figure 16—Installing the Seal

BRAKE BACKING PLATE REPLACEMENT

Remove or Disconnect (Figure 7)

- Raise the vehicle on a hoist.

1. Wheel and tire assembly.
2. Brake drum (10).
3. Axle shaft (12). Refer to "Axle Shaft Replacement" in this section.
4. Brake line from the cylinder inlet.
5. Brake components from the backing plate (20). Refer to HYDRAULIC FOUNDATION BRAKES (SEC. 5A2).
6. Bolts (21) and washers from the backing plate (20).
7. Backing plate (20) from the axle.

Install or Connect

1. Backing plate (20) to the axle. Housing (16).
2. Bolts (21) and washers to the backing plate.

3. Brake components to the backing plate (20). Refer to HYDRAULIC FOUNDATION BRAKES (SEC. 5A2).
4. Brake line to the cylinder inlet.
   - Refer to HYDRAULIC BRAKES (SEC. 5A) for bleeding and adjustment procedures.
5. Axle shaft (12). Refer to "Axle Shaft Replacement" in this section.
6. Brake drum (10).
7. Wheel and tire assembly.

WHEEL STUD REPLACEMENT

Remove or Disconnect (Figure 17)

Tool Required:

J 6627-A Wheel Stud Remover

- Raise the vehicle on a hoist and allow the axle to hang free.

1. Wheel and tire assembly.
2. Brake drum.
3. Stud (A) from the axle flange (B) using J 6627-A (figure 17).

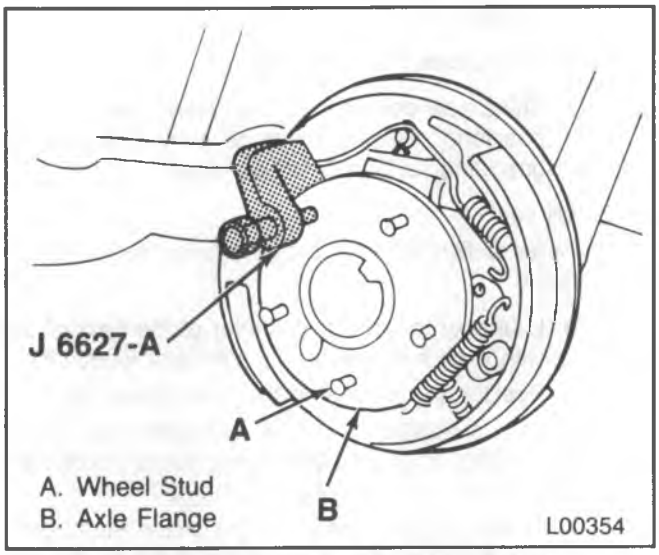

Figure 17—Pressing Out Wheel Stud

Install or Connect

1. Stud (A) in the axle flange (B) hole. Refer to figure 17.
   - Start the new stud (A) into the axle flange (B) hole by pressing firmly with your hand.
   - Thread on a wheel nut with the flat side to the vehicle.
   - Tighten the wheel nut and draw the stud (A) head into the rear of the flange (B).
   - Thread the wheel nut off.
2. Brake drum.
3. Wheel and tire assembly.

- Lower the vehicle.

PINION FLANGE, DUST DEFLECTOR/OIL SEAL REPLACEMENT

Remove or Disconnect (Figures 18 through 21)

Tool Required:

J 8614-01 Pinion Flange Holder and Remover

- Raise the vehicle on a hoist.

1. Propeller shaft from the axle. Refer to PROPELLER SHAFT (SEC. 4A).

Measure

The torque required to rotate the pinion (figure 18). Record the torque value for later reference.

Important

Scribe a line on the pinion stem (A), pinion nut and the pinion flange and record the number of exposed threads on the pinion stem. The scribed reference and the exposed threads will be used as an installation guide (figure 19).

2. Nut using J 8614-01.
   - Position J 8614-01 on the flange so that the four notches on the tool face the flange (figure 20).
3. Flange using J 8614-01.
   - Use the special nut and forcing screw to remove the flange (figure 21).
4. Oil seal. Use a screwdriver to pry the seal out of the bore.

Inspect

- The pinion flange for a smooth oil seal surface, for worn drive splines, damaged ears and for smoothness of the bearing contact surface. Replace if necessary.

5. Dust deflector.
   - Tap the deflector from the flange if replacement is necessary.
   - Clean the stake points on the flange.
   - Clean all foreign material from the contact area.

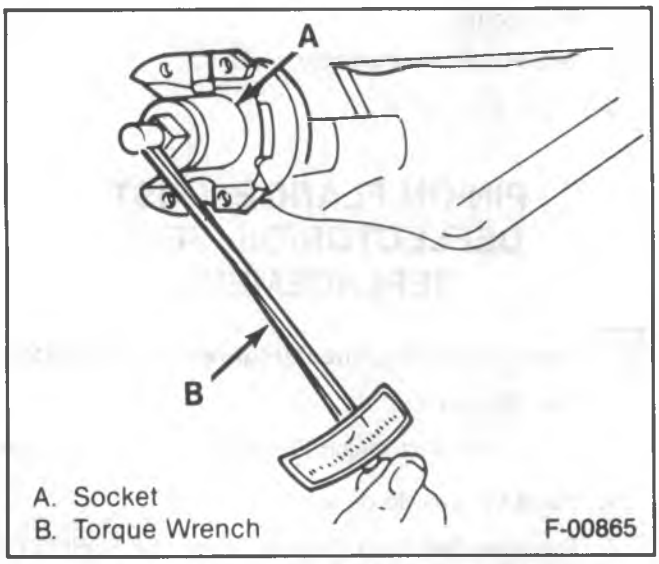

Figure 18—Measuring Pinion Rotating Torque

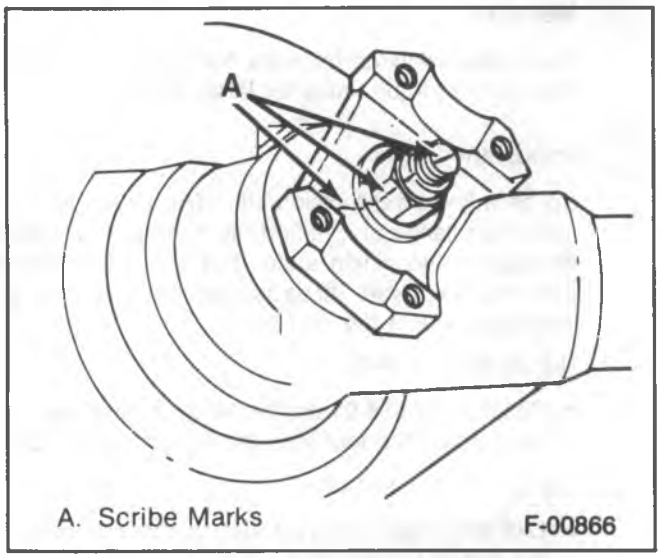

Figure 19—Scribed Marks

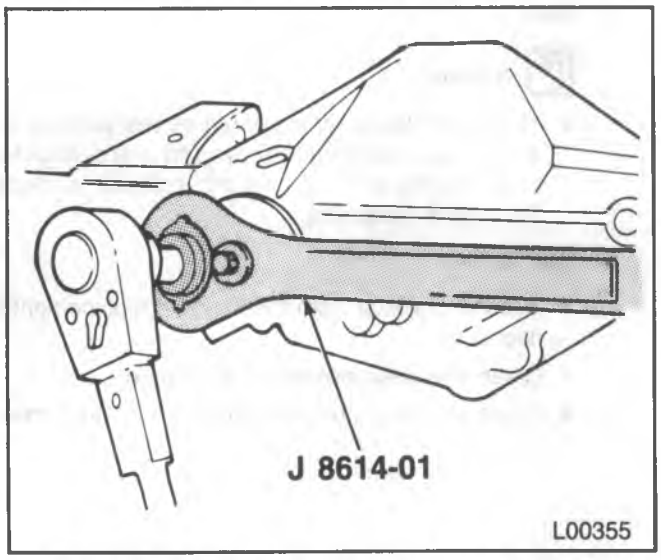

Figure 20—Removing/Installing the Pinion Nut

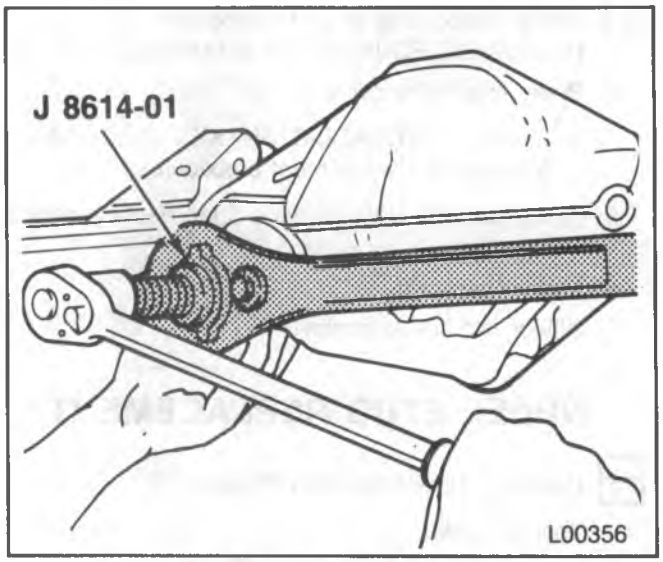

Figure 21—Removing the Pinion Flange

Install or Connect (Figures 18, 22, 23 and 24)

Tools Required:

J 8614-01 Pinion Flange Holder and Remover

J 22388 Pinion Oil Seal Installer (9 1/2-inch ring gear)

J 22836 Pinion Seal Installer (8 1/2-inch ring gear)

1. Dust deflector on the flange.
   - Stake new deflector at three new equally spaced positions. Staking must be such that the seal operating surface is not damaged.
2. Oil seal.
   Refer to figure 24 for proper pinion seal installation depth.
   - Lubricate the inside diameter of the new oil seal with extreme pressure lithium-base lubricant.
   - Position the oil seal in the bore (figure 22).
   - Use J 22836 for the 8 1/2-inch ring gear or J 22388 for the 9 1/2-inch ring gear to press the oil seal into the bore (figure 22).
   - Pack the cavity between the pinion stem, pinion flange and pinion nut washer with a non-hardening sealer such as PERMATEX TYPE A or equivalent.
3. Flange onto the pinion using J 8614-01 (figure 23).
   - Place washer and nut on the pinion threads and tighten the nut to the original scribed position using the scribe marks and exposed threads as a reference. **DO NOT ATTEMPT TO HAMMER THE FLANGE ONTO THE PINION SHAFT.**

Measure

The rotating torque of the pinion and compare with the torque recorded previously (figure 18).

Tighten

The pinion nut in additional small increments until the torque necessary to rotate the pinion exceeds the original recorded value by 0.35 N•m (3 in. lbs.).

4. Propeller shaft. Refer to PROPELLER SHAFT (SEC. 4A).

- Lower the vehicle and road test.

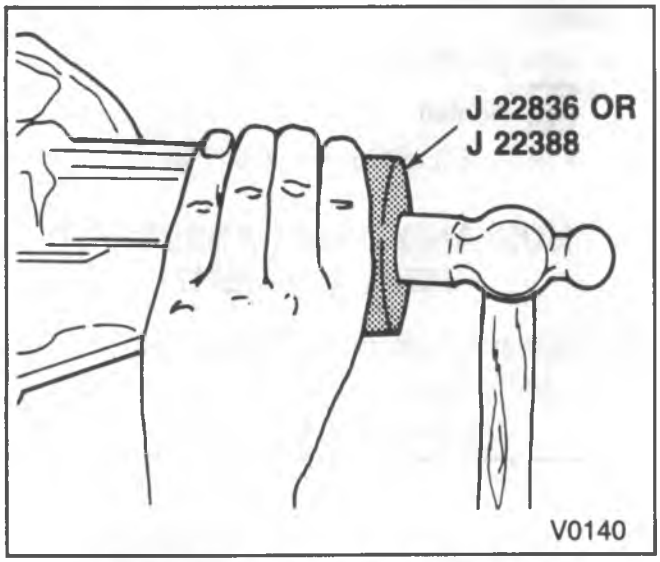

Figure 22—Installing the Pinion Seal

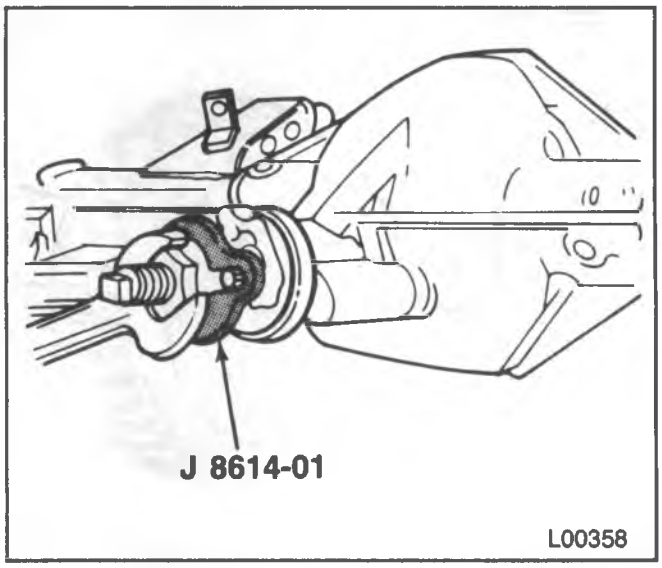

Figure 23—Installing the Pinion Flange

Ring Gear Size	Seal Depth
8½"	1.31 mm (0.052")
9½"	Seal Bottoms into Bore
9¾" and 10½"	Insert Seal to Step in Bore

GMTB-3084-1A

Figure 24—Pinion Seal Installation Depth

DANA FULL FLOATING AXLE (9 3/4- AND 10 1/2-INCH RING GEAR)

The following rear axle procedures apply to vehicles equipped with rear drum brakes. However, if the model to be serviced has rear disc brakes, refer to HYDRAULIC FOUNDATION BRAKES (SEC. 5A2) for the appropriate brake-related procedures.

AXLE SHAFT REPLACEMENT

Remove or Disconnect (Figures 25 and 26)

1. Bolts (55) (figure 25).
   - Rap the axle shaft flange (53) lightly with a soft-faced hammer to loosen the shaft.
   - Grip the rib on the axle shaft (53) flange with a locking plier and twist to start shaft removal.
2. Axle shaft (53) from the tube.

Clean

Axle shaft (53) flange. Remove old RTV or gasket (51).

Outside face of the hub (49) assembly.

Inspect

- Shaft for abnormal wear at areas that ride in bearings.
- Shaft to see if it is bent.
- Shaft splines for chips, burrs, cracking or if they are worn.

Replace if any of the above conditions exist.

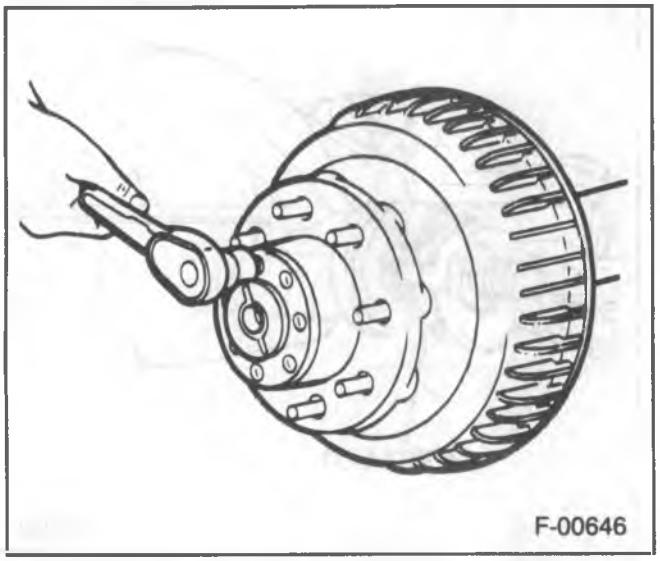

Figure 25—Removing or Installing Flange-to-Hub Bolts

Install or Connect (Figures 25 and 26)

1. Axle shaft (53) with gasket (51) (if used) or RTV applied.
   - Be sure the shaft splines mesh into the differential side gear.
   - Align the axle shaft holes with the hub holes.

NOTICE: See "Notice" on page 4B1-1 of this section.

2. Bolts (55) (figures 25 and 26).

Tighten

- Bolts (55) to 156 N•m (115 ft. lbs.).

HUB AND DRUM ASSEMBLY REPLACEMENT

Remove or Disconnect (Figure 26)

Tool Required:

J 2222-C Wheel Bearing Nut Wrench

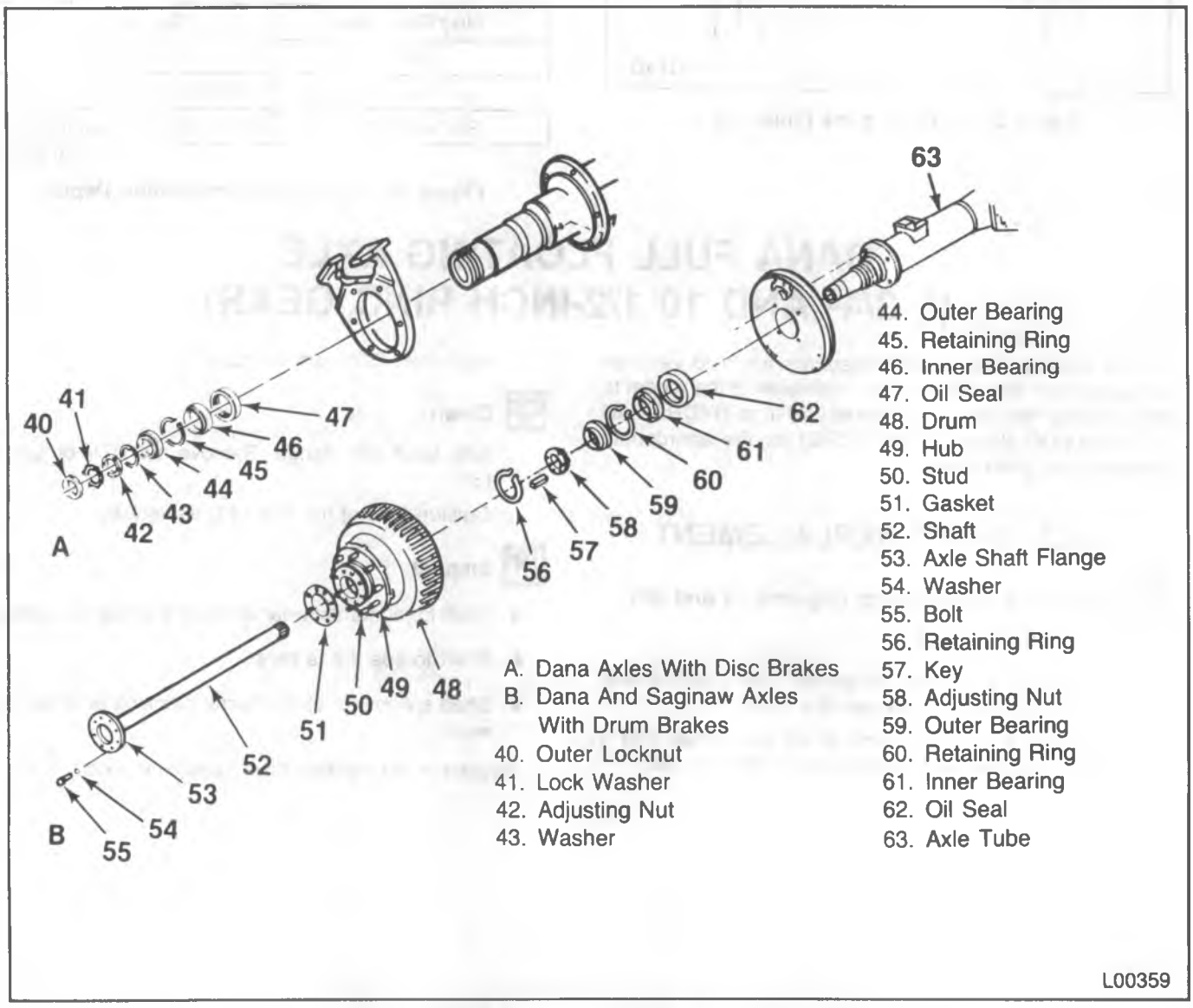

Figure 26—Full-Floating Axle, Wheel End Components

- Raise the vehicle until the wheel is free to rotate.

1. Wheel and tire assembly.
2. Axle shaft (52). Refer to "Axle Shaft Replacement" in this section.
3. Nut (40) using J 2222-C (figure 27), or retaining ring (56).
4. Lock (41) or key (57).
5. Adjusting nut (42 or 58). Refer to figure 27.
6. Washer (43).
7. Hub and drum (48 and 49).

Inspect

- For any worn or damaged parts. Replace any part which appears defective.

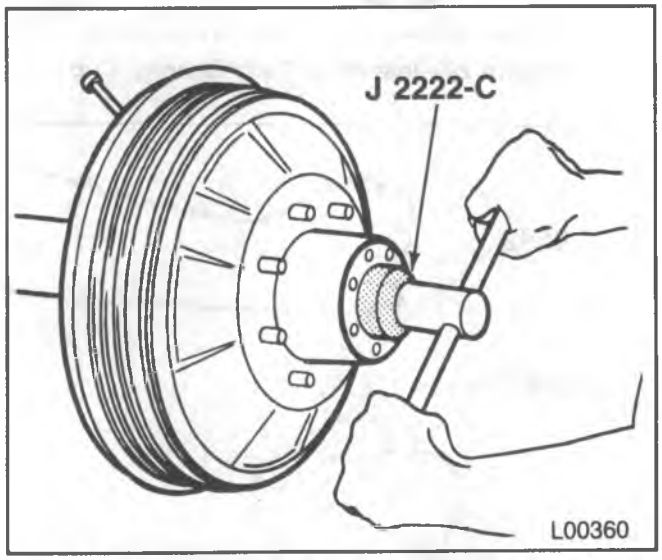

Figure 27—Removing or Installing Bearing Adjusting Nut

Install or Connect (Figures 26 and 27)

NOTICE: For steps 3, 4 and 5 see "Notice" on page 4B1-1 of this section.

Tool Required:

J 2222-C Wheel Bearing Nut Wrench

1. Hub and drum (48 and 49) to the tube.
   - Be sure the bearings (44 and 46 or 59 and 61) and the oil seal (47 or 62) are positioned properly.
   - Apply a light coat of high melting point EP bearing lubricant to the contact surfaces and the outside of the axle tube (63). Refer to MAINTENANCE AND LUBRICATION (SEC. 0B).
2. Washer (43)
   - Engage tang in keyway.
3. Adjusting nut (42 or 58). Refer to figure 27.

   Adjust

   - Adjusting nut (42 or 58) to "Specifications" at the end of this section while turning the hub (49).
4. Lock (41) or key (57).
   - Bend the tank to the flat of the adjusting nut (42) or insert the key (57).
5. Nut (40) or retaining ring (46). Refer to figure 27.

   Tighten

   - Nut (40) to "Specifications" at the end of this section.
6. Axle shaft (52). Refer to "Axle Shaft Replacement" in this section.
7. Wheel and tire assembly.

- Lower the vehicle.

WHEEL BEARING/CUP REPLACEMENT

Remove or Disconnect (Figures 26 and 28)

Tools Required:

J 8092 Drive Handle

J 24426 Outer Wheel Bearing Cup Installer

- Raise the vehicle until the wheels are free to rotate.

1. Axle shaft (52). Refer to "Axle Shaft Replacement" in this section.
2. Hub and drum assembly (48 and 49). Refer to "Hub and Drum Assembly Replacement" in this section.
3. Inner bearing (46 or 61) and oil seal (47 or 62).
   - Lay the drum (48) on a flat surface with a shop towel to catch the bearing (46 or 61) and seal (47 or 62).
   - Use a drift to remove the bearing cup and seal.
4. Retaining ring (45 or 60).
   - Use snap ring pliers to remove the ring.
5. Outer bearing (44 or 59) using J 8092 with J 24426 (figure 28).
   - Drive the bearing (44 or 59) and cup from the hub (49).

Clean

- Old sealing compound from the oil seal (47 or 62) bore in the hub (49).
- Bearing assemblies in a solvent using a stiff brush to remove the old lubricant. Dry the bearings with compressed air. **Do not spin them.**
- Lubricant from the axle tube (63) and inside the hub (49).
- Gasket material (if used) from the hub (49) and axle shaft (52).

Inspect

- Bearings for wear, chipped edges or other damage. Check for flat or rough spots on the rollers. Refer to wheel bearing diagnosis illustrations in this section (figures 3 through 6).
- Cups for pits and cracks.
- Oil seal for wear or roughness. Replace parts as necessary.
- Pack inner (46 or 61) and outer (44 or 59) bearings with wheel bearing lubricant 1051344 or equivalent. Refer to MAINTENANCE AND LUBRICATION (SEC. 0B).

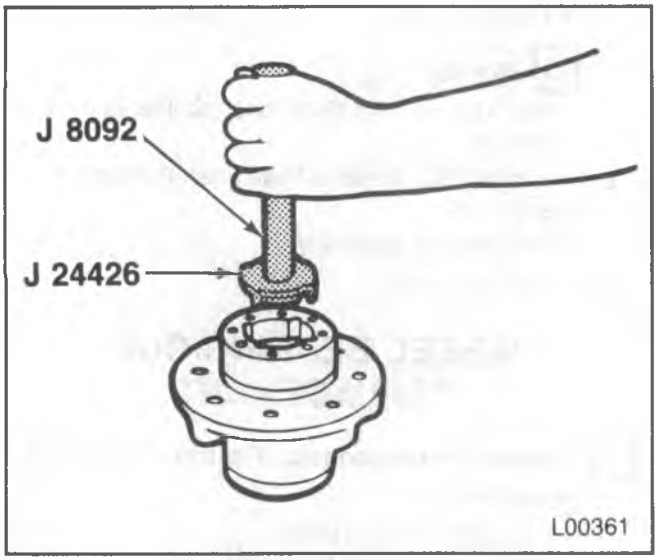

Figure 28—Removing the Outer Bearing and Cup

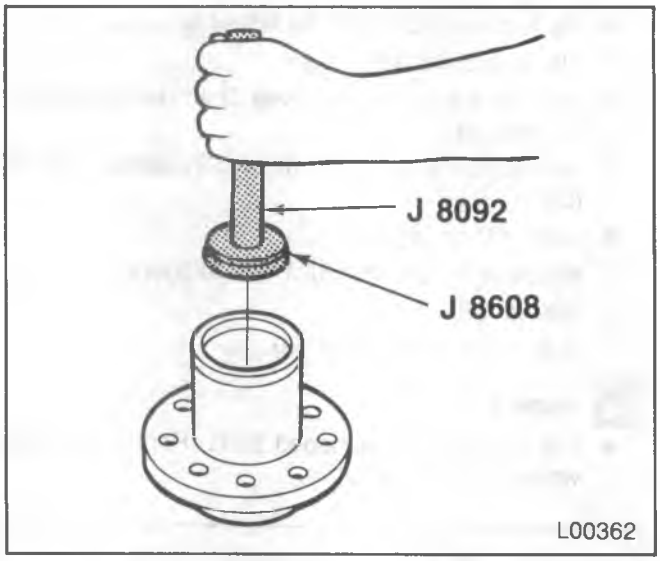

Figure 29—Installing Outer Bearing Cup

Install or Connect (Figures 26, 29, 30 and 31)

Tools Required:

- J 8092 Driver Handle
- J 8608 Outer Pinion Bearing Cup Installer
- J 24426 Outer Wheel Bearing Cup Installer
- J 24427 Inner Wheel Bearing Cup Installer
- J 24428 Axle Shaft Seal Installer

1. Outer bearing cup (44 or 59) into the hub (49).
   - Drive the cup into the hub using J 8092 and J 8608 (figure 29). Drive the cup beyond the retaining ring groove.

Important

- Be sure J 8608 is installed upside down on J 8092 so that the chamfer does not contact the bearing cup.

2. Retaining ring into the groove.
   - Drive the cup back onto the retaining ring using J 24426 (figure 30).
3. Inner bearing cup (46 or 61) using J 8092 and J 24427 (figure 31).
   - Drive the cup into place until it is seated against the hub shoulder.
4. Inner bearing (46 or 61).
5. New oil seal using J 24428 (figure 32).
6. Hub and drum.
7. Outer bearing (44 or 59).

Adjust

- Bearing preload. Refer to "Bearing Adjustment" in this section.

8. Axle shaft (52).

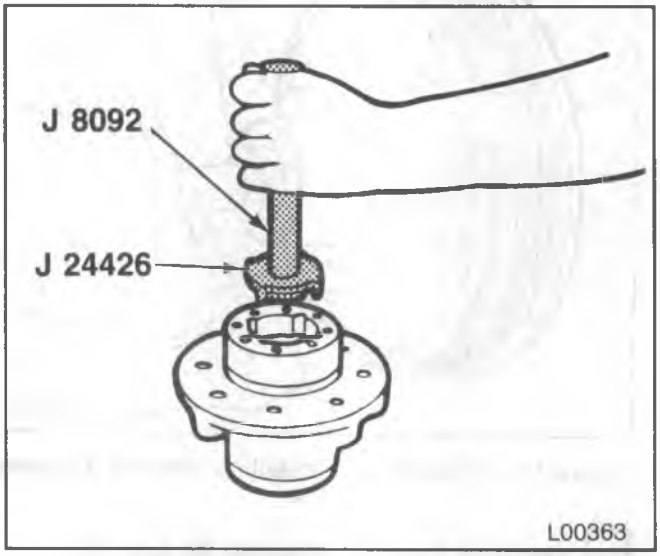

Figure 30—Seating Outer Bearing Cup onto Retaining Ring

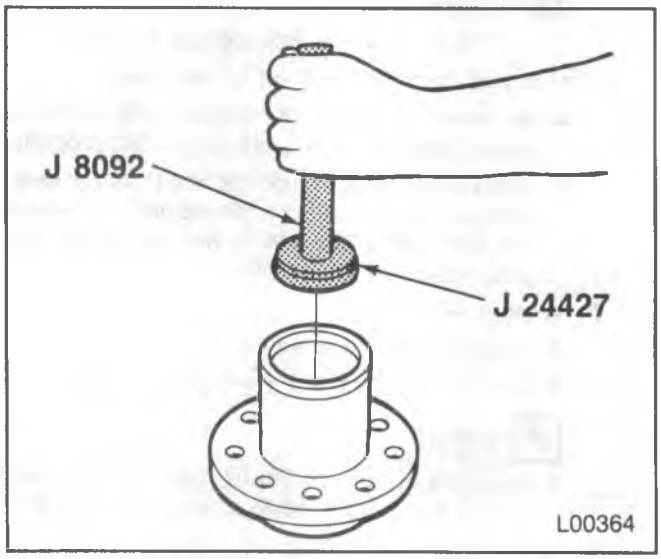

Figure 31—Installing Inner Bearing Cup

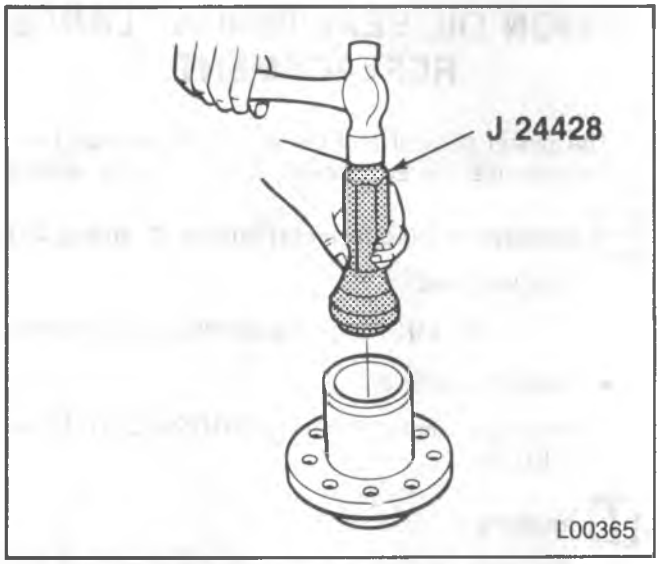

Figure 32—Installing Oil Seal into Hub

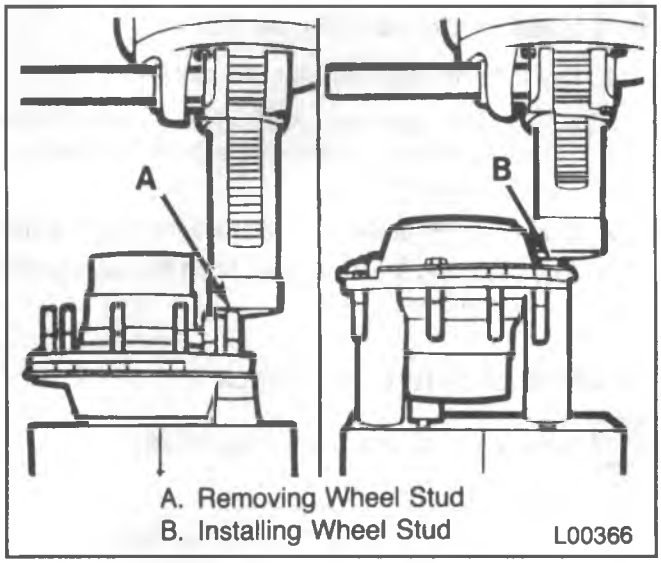

Figure 33—Wheel Stud Replacement

NON-DEMOUNTABLE TYPE DRUM REPLACEMENT

Construction of the non-demountable type drum and hub assembly is such that replacement cannot be done with the hub assembly installed on the vehicle.

Remove or Disconnect

- Raise the vehicle.

1. Hub and drum assembly. Refer to "Hub and Drum Assembly Replacement" in this section.
2. Retaining bolts, stud nuts or wheel studs.
   - Separate the drum, hub and oil deflector (if equipped).
   - Press the wheel studs out of the drum. Replace parts as necessary.

Install or Connect

1. Drum to the hub.
   - Make certain the drain holes are aligned.
2. Oil deflector (if equipped) to the drum.
   - Apply a light coating of sealing compound to the oil deflector contact surface.
3. Retaining bolts, stud nuts or wheel studs.
   - Press the wheel studs into the drum.

WHEEL STUD REPLACEMENT

Wheel studs are serrated and may also be swaged in place; however, replacement procedure remains the same for both types of installation. Press the wheel studs out of the hub flange, then press new wheel studs into place, making sure of a tight fit. When replacing all of the wheel studs be sure that the hub oil deflector (if equipped) is in position under the wheel stud heads. Refer to figure 33.

WHEEL BEARING ADJUSTMENT

- Make sure the brakes are fully released and do not drag.
- Check the wheel bearing play by grasping the tire at the top and pulling and pushing back and forth, or by using a pry bar under the tire. If the tapered roller bearings are properly adjusted, movement of the brake drum in relation to the brake flange plate will be barely noticeable and the wheel will turn freely. If the movement is excessive, adjust the bearings.

REAR AXLES WITH DRUM BRAKES

Remove or Disconnect (Figure 26)

Tool Required:

J 2222-C Wheel Bearing Nut Wrench

- Raise the vehicle until the wheel is free to spin.

1. Axle shaft (52). Refer to "Axle Shaft Replacement" in this section.
   - Be sure the keyway, threads and adjusting nut (58) are clean and free of chips, burrs and shavings.
2. Retaining ring (56).
3. Key (57).
4. Adjusting nut (58).

Tighten

- Adjusting nut (58) to 68 N•m (50 ft. lbs.). Tighten with J 2222-C (figure 34) while rotating the hub assembly, making certain the bearing cones are seated and in contact with the spindle shoulder.

Adjust

- Back off adjusting nut (58) until loose.
- Rotate nut until nut's inboard end contacts the bearing cone shoulder. Torque on nut must be zero or only finger tight.

Install or Connect (Figure 26)

1. Key (57) into adjusting nut (58) slot.
   - If slot is in alignment with keyway in axle spindle, back nut off a slight amount, but not more than one slot, to align key.
2. Snap ring (56) at spindle end. Be sure ring is seated.
3. Axle shaft (52). Refer to "Axle Shaft Replacement" in this section.

REAR AXLES WITH DISC BRAKES

Remove or Disconnect (Figure 26)

Tool Required:

J 2222-C Wheel Bearing Nut Wrench

- Raise the vehicle until the wheel is free to spin.

1. Axle shaft. Refer to "Axle Shaft Replacement" in this section.
2. Outer locknut (40).
   - Disengage the lock washer (41) from the nut.
3. Lock washer (41).
4. Adjusting nut (42).

Tighten

- Adjusting nut (42) to 68 N•m (50 ft. lbs.). Tighten with J 2222-C while rotating the hub assembly, making certain the bearing cones are seated and in contact with the spindle shoulder.

Adjust

- Back off the adjusting nut (42) and retighten to 41-54 N•m (30-40 ft. lbs.) while hub is rotated.
- Back off the adjusting nut (42), 135 to 150 degrees.

Install or Connect

1. Lock washer (41).
   - Bend one tang of lock washer over a flat of the adjusting nut (42), 30 degrees minimum.

NOTICE: See "Notice" on page 4B1-1 of this section.

2. Outer locknut (40).

Tighten

- Outer locknut (40) to 88 N•m (65 ft. lb.) minimum.
  - Bend one tang of lock washer over a flat of the outer nut (40), 60 degrees minimum.
3. Axle shaft. Refer to "Axle Shaft Replacement" in this section.

PINION OIL SEAL/PINION FLANGE REPLACEMENT

The pinion oil seal and the pinion flange may be replaced with the carrier assembly installed in the vehicle.

Remove or Disconnect (Figures 19, 20 and 21)

Tool Required:

J 8614-01 Pinion Flange Holder and Remover

- Raise the vehicle.

1. Propeller shaft. Refer to PROPELLER SHAFT (SEC. 4A).

Important

Scribe a line on the pinion stem, pinion nut and pinion flange to be used as an installation guide (figure 19).

2. Nut using J 8614-01 (figure 20).
3. Flange using J 8614-01 (figure 21).
   - Use the special nut and forcing screw to remove the flange.
4. Oil seal.
   - Pry the oil seal from the bore. Do not damage the machined surfaces.
   - Thoroughly clean foreign material from the contact area.

Inspect

- Oil seal mating surfaces for any burrs which may cause seal failure.
- Flange deflector for any abnormality (cracking, distorted).

Replace any part which shows any of the above conditions.

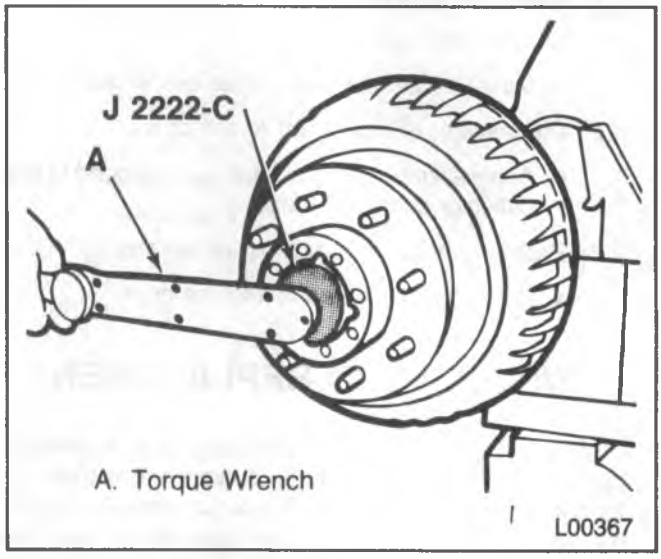

Figure 34—Tightening the Adjusting Nut

Install or Connect (Figure 35)

Tools Required:

J 8614-01 Pinion Flange Holder and Remover

J 24384 Pinion Oil Seal Installer (Dana 10 1/2-inch ring gear axle).

1. Oil seal into the bore using J 24384 (figure 35). Refer to figure 24 for proper pinion depth installation.
   - Lubricate the inside diameter of the new oil seal with extreme pressure lubricant such as 9985038 or equivalent.
   - Pack the cavity between the pinion stem, pinion flange and pinion nut washer with a non-hardening sealer such as PERMATEX TYPE A or equivalent.
2. Flange using J 8614-01 (figure 23).
   - Use marks scribed previously for installation.
3. Nut, using J 8614-01 (figure 20).
   - Use marks scribed previously for installation.
4. Propeller shaft. Refer to PROPELLER SHAFT (SEC. 4A).

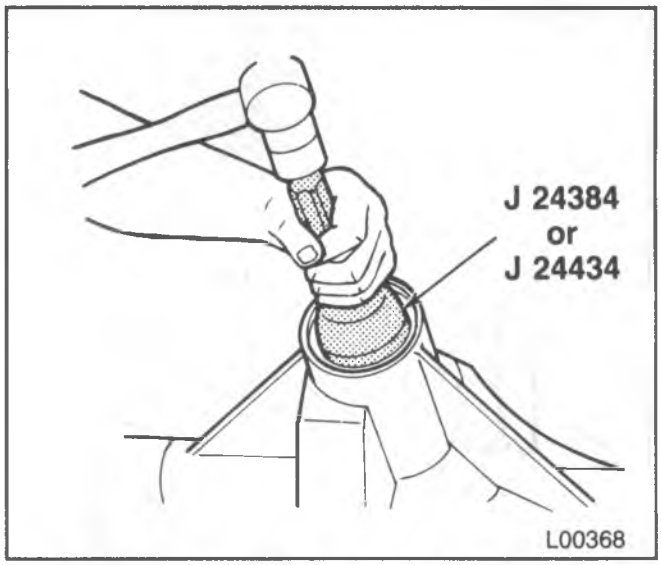

Figure 35—Installing Pinion Oil Seal into Bore

ROCKWELL FULL FLOATING AXLE (12-INCH RING GEAR)

AXLE VENT REPLACEMENT

A threaded-type axle vent is used on the Rockwell 12-inch ring gear axle and must be replaced if the vent cap is damaged or missing.

Clean

- The area around the axle vent.

Remove or Disconnect

- Axle vent from the housing.

Install or Connect

- Axle vent to the housing.

AXLE SHAFT REPLACEMENT

Remove or Disconnect (Figures 36 and 37)

Tool Required:

J 2619-01 Slide Hammer

- Raise the vehicle and place jack stands under the frame side rails.

1. Bolts (70) and washers (71).
2. Hub cap (72).

- Thread J 2619-01 into the tapped hole on the axle shaft (74) flange (figure 35).

3. Axle shaft (74) using J 2619-01 (figure 37).

Clean

- Old gasket material from the hub (86), hub cap (72), the axle shaft (74) flange and mating surface in the hub (86).

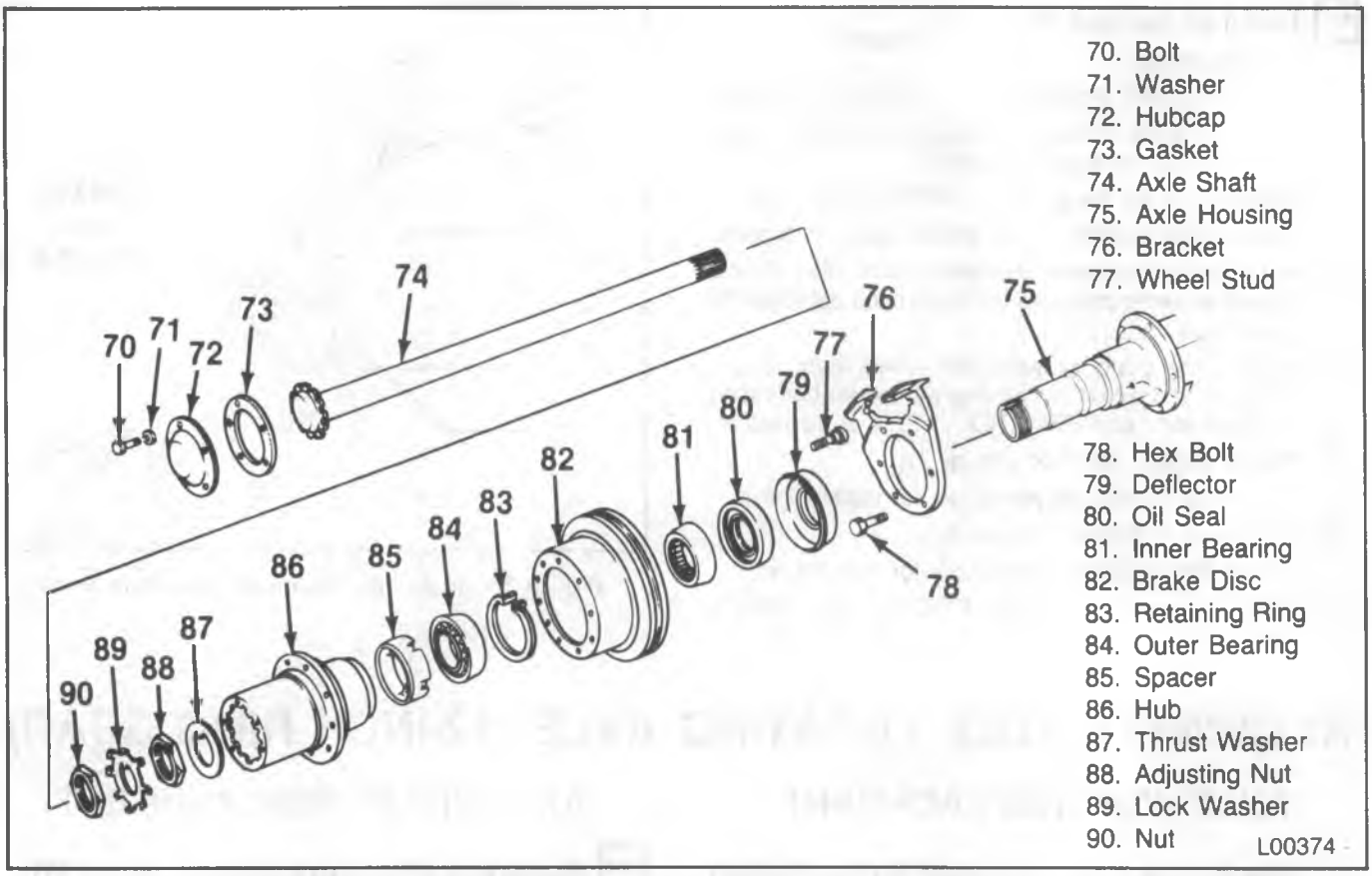

Figure 36—Rockwell 12-Inch Ring Gear Axle and Hub Components

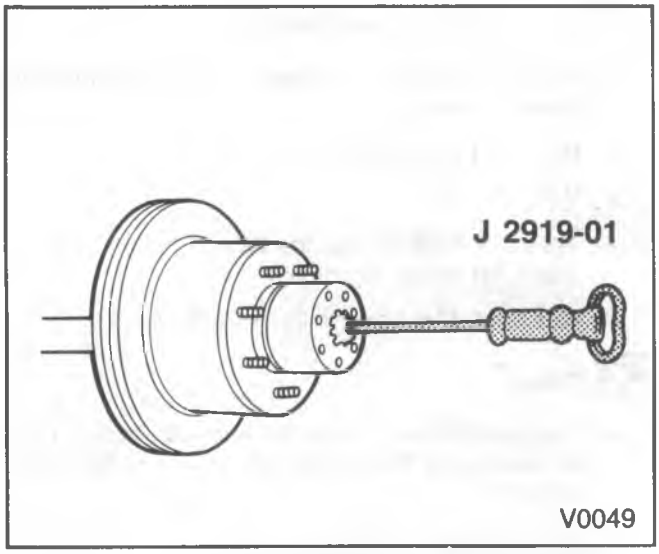

Figure 37—Removing/Installing the Axle Shaft

Install or Connect (Figures 36 and 37)

Tool Required:

J 2619-01 Slide Hammer

1. Axle shaft (74).
   - Tap the axle shaft (74) into position using J 2619-01 (figure 36).
   - Index the axle shaft (74) splines into the hub (86) splines.
2. Gasket (73).
3. Hub cap (72).
4. Washers (71) and bolts (70).

BEARING ADJUSTMENT

- Make sure the brakes are fully released and do not drag.
- Check the wheel bearing play by grasping the tire at the top and pulling and pushing back and forth, or by using a pry bar under the tire. If the wheel bearings are properly adjusted, movement of the hub or disc will be barely noticeable. If the movement is excessive, adjust the bearings.

Remove or Disconnect (Figures 36 and 38)

Tool Required:

J 25510 Wheel Bearing Nut Wrench

- Raise the vehicle until the wheel is free to spin.

1. Axle shaft (74). Refer to "Axle Shaft Replacement" in this section.
2. Nut (90) using J 25510 (figure 38).
   - Release the tang.
3. Lock washer (89).

Adjust

- Nut (88) using J 25510. Tighten the nut (88) to 68 N•m (50 ft. lbs.) while the hub is rotating. Make sure the bearing surfaces are in contact and then back the nut (88) off 1/8 turn.

Install or Connect (Figures 36 and 38)

1. Lock washer (89).
   - Bend a tang over a flat of the adjusting nut (88).

NOTICE: See "Notice" on page 4B1-1 of this section.

2. Nut (90) using J 25510 (figure 38).

Tighten

- Nut (90) to 339 N•m (250 ft. lbs.).
- Bend a long tang of the lock washer (89) over a flat of the nut (90).

3. Axle shaft (74). Refer to "Axle Shaft Replacement" in this section.

- Lower the vehicle.

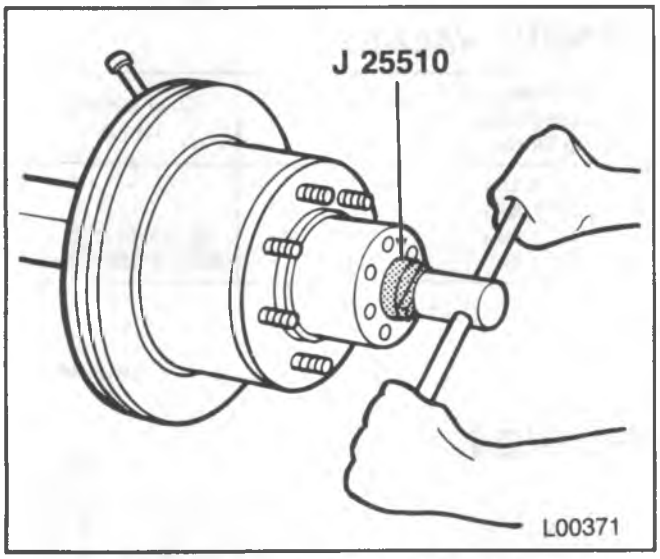

Figure 38—Removing Wheel Bearing Nut

PINION OIL SEAL/PINION FLANGE REPLACEMENT

Remove or Disconnect (Figure 39)

Tool Required:

J 8614-01 Pinion Flange Holder and Remover

- Raise the vehicle.

1. Propeller shaft. Refer to PROPELLER SHAFT (SEC. 4A).

Important

- Scribe a reference line on the pinion stem, pinion nut and pinion flange (figure 19).

2. Cotter pin (91) and nut (92) using J 8614-01 (figure 20).
3. Pinion flange (94) (figure 21).
4. Bolts (97).
5. Oil seal retainer (95).
6. Oil seal (96).
   - Pry the oil seal (96) from the bore being careful not to damage the machined surfaces.

Clean

- The seal contact area.

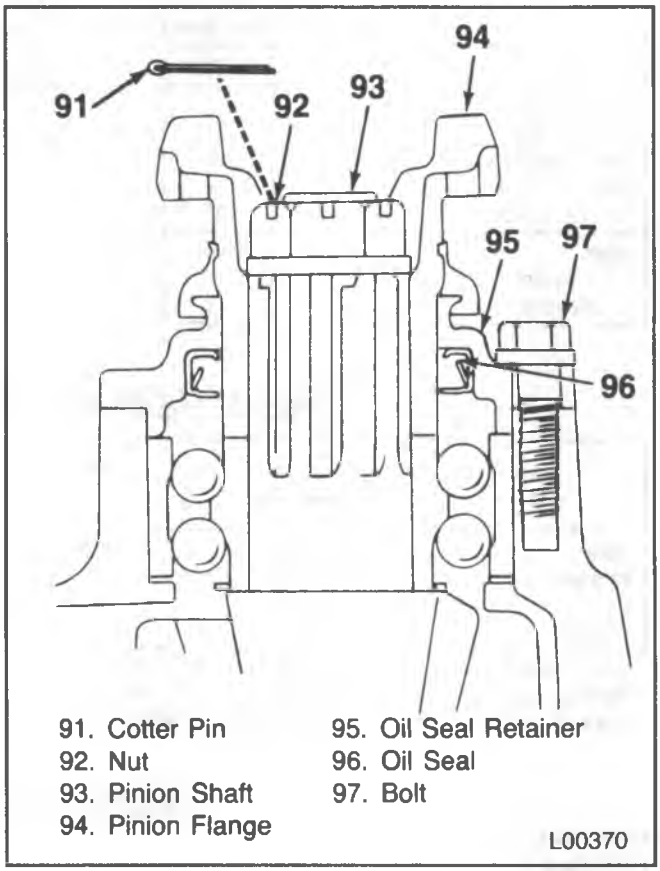

Figure 39—Pinion Oil Seal Components

Install or Connect (Figure 39)

- Lubricate the inside diameter of the new oil seal (96) lips with extreme pressure lubricant such as 9985038 or equivalent.

1. Oil seal (96) into the bore.
   - Be sure the seal (96) bottoms against the bore shoulder.
2. Oil seal retainer (95).
3. Bolts to the retainer (97).

- Pack the cavity between the pinion stem, pinion flange and pinion nut washer with a non-hardening sealer such as PERMATEX TYPE A or equivalent.

4. Pinion flange (94) using the scribed reference mark.

NOTICE: See "Notice" on page 4B1-1 of this section.

5. Nut (92) using J 8614-01 (figure 20).

Tighten

- Nut (92). Align the castellated nut with the hole in the pinion shaft (93) stem and the reference mark.

6. Cotter pin (91).
7. Propeller shaft. Refer to PROPELLER SHAFT (SEC. 4A).

SPECIFICATIONS

TORQUES

	8½" Ring Gear — Semi Floating Axle		9½" Ring Gear — Semi Floating Axle		DANA 9¾"-10½" Ring Gear Axle — Full Floating		Chevrolet 10½" Ring Gear Axle — Full Floating		Rockwell 12" Ring Gear Axle — Full Floating	
	N•m	Ft. Lbs.	N•m	Ft. Lbs.	N•m	Ft. Lbs.	N•m	Ft. Lbs.	N•m	Ft. Lbs.
Filler Plug	34	25	24	18	14	10	24	18	47	35
Lock Screw	34	25	34	25	—	—	—	—	—	—
Brake Backing Plate	47	35	142	105	142	105	142	105	—	—
Axle Shaft to Hub Bolts	—	—	—	—	156	115	156	115		
Carrier Cover	27	20	27	20	47	35	41	30	—	—
Axle Lubricant Capacity	Liters	Pints	Liters	Pints	Liters	Pints	Liters	Pints	Liters	Pints
	2.0	4.2	2.6	5.5	2.6	5.5	3.4	7.2	6.6	14.0

GMTB-0855-2L

WHEEL BEARING ADJUSTMENT VALUES*

Axle Make	Rear Brake Type	Ring Gear Size	Bearing Adjusting Nut Torque (While Rotating Wheel)	Adjusting Nut Back-Off	Outer Locknut Torque
Dana	Drum	9¾ and 10½ inch	68 N·m (50 ft. lbs.)	**	—
Saginaw	Drum	10½ inch	68 N·m (50 ft. lbs.)	**	—
Dana	Disc	10½ inch	68 N·m (50 ft. lbs.)	***	88 N·m (65 ft. lbs.)
Rockwell	Disc	12 inch	68 N·m (50 ft. lbs.)	⅛ Turn	339 N·m (250 ft. lbs.)

*Resulting end play should be 0.0254 to 0.254 mm (0.001 to 0.010 inch).
**Back off until loose. Rotate nut up against bearing cone shoulder (zero torque).
***Back off and retighten to 41-54 N·m, while rotating wheel. Back off again 135-150 degrees.

GMTB-0856-2L

PARTS IDENTIFICATION

PART NAME	GROUP
Rear Axle	5.386
Brake Flange Plate (Backing)	5.001
Pinion Seal	5.469
Axle Shaft	5.420
Axle Shaft Lock	5.422
Axle Shaft Oil Seal	5.822
Wheel Bearing (Axle Shaft)	5.855
Gear Kit (Diff., Pinion & Side Gear)	5.527
Pinion Flange	5.545
Wheel Bolt (Stud)	5.812
Axle Vent Connector	5.387

GMTB-3139-2A

AXLE IDENTIFICATION

Refer to figure 40 to identify the particular rear axle that is in the vehicle being serviced. To identify the axle ratio, refer to the following chart. It lists the RPO (regular production option) and its coordinating axle ratio.

To find which RPO axle ratio is in the vehicle, refer to the RPO label on the vehicle. The label is located in the instrument panel compartment on R/V models. Location of the label on P models is determined by the body builder.

RPO	RATIO
R/V Models	
G80	POSI
GV4	3.08
GV6	3.42
GT4	3.73
HC4	4.56
P Models	
G80	POSI
GT5	4.10
HC4	4.56
GK9	4.63
HF8	4.88
HC7	5.13

GMTB-3168-1A

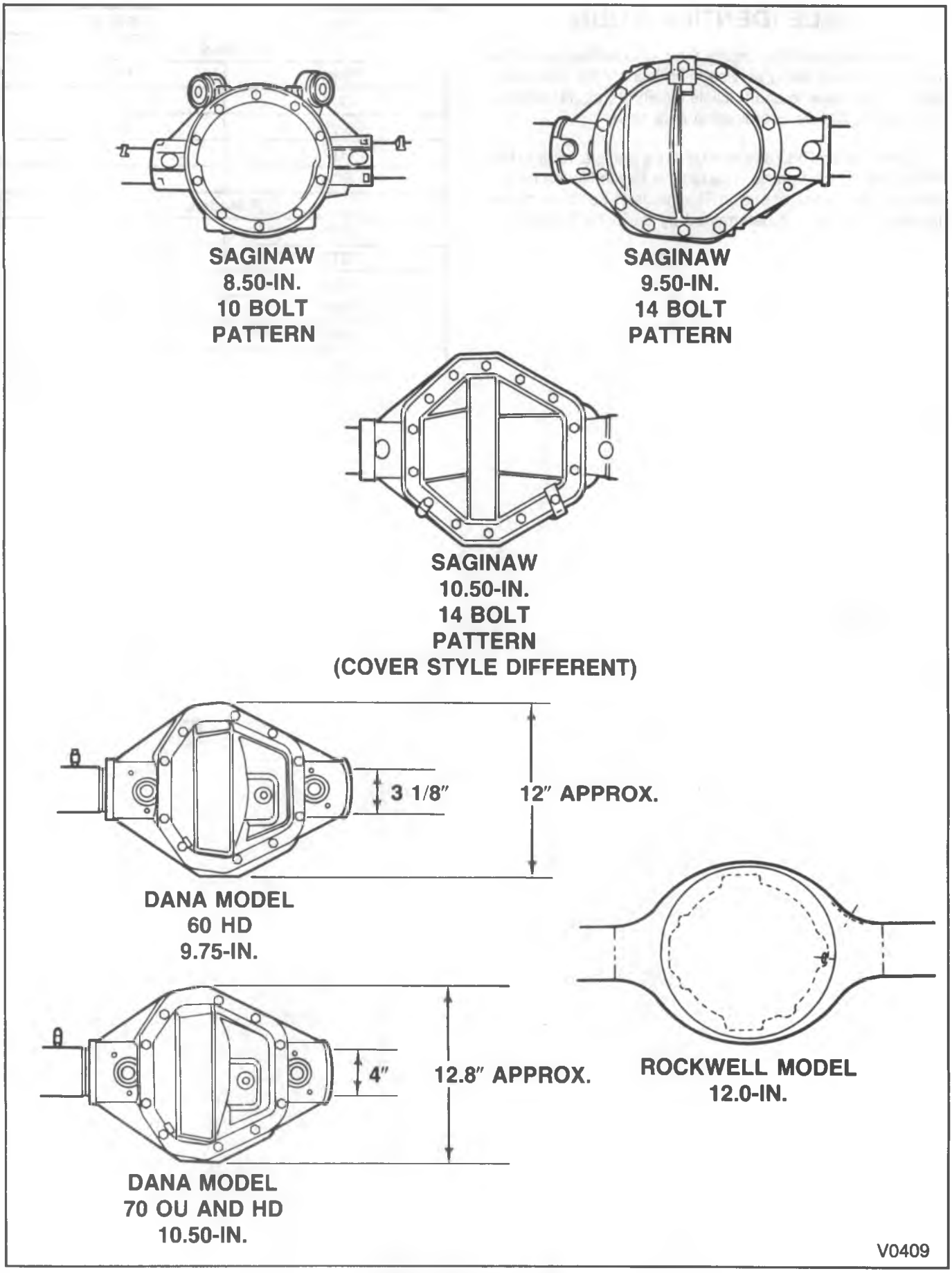

Figure 40—Rear Axle Identification

SPECIAL TOOLS

1. J 6627-A

2. J 8092

3. J 8614-01

4. 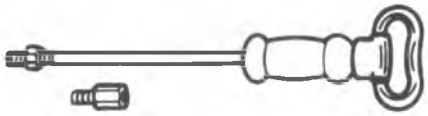 J 2619-01

5. J 2222-C

6. J 24426

7. J 24427

8. J 8608

9. J 24384

10. J 24428

1. Wheel Stud Remover
2. Driver Handle
3. Pinion Flange Holder and Remover
4. Slide Hammer With Adapter
5. Wheel Bearing Nut Wrench
6. Outer Wheel Bearing Cup Installer
7. Inner Wheel Bearing Cup Installer
8. Outer Pinion Bearing Cup Installer
9. Pinion Oil Seal Installer
10. Axle Shaft Seal Installer

L00372

SPECIAL TOOLS (CONT.)

11. 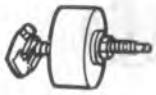 J 29712

12. J 23689

13. J 21128

14. J 23690

15. J 29709

16. 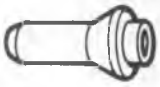 J 29713

17. 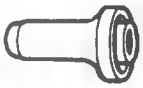 J 22388

18. 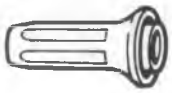 J 22836

19. J 25510

11. Axle Shaft Bearing Remover (9 1/2-Inch Ring Gear)
12. Axle Shaft Bearing Remover (8 1/2-Inch Ring Gear)
13. Axle Shaft and Pinion Oil Seal Installer
14. Axle Shaft Bearing Installer (8 1/2-Inch Ring Gear)
15. Axle Shaft Bearing Installer (9 1/2-Inch Ring Gear)
16. Axle Shaft Seal Installer (9 1/2-Inch Ring Gear)
17. Pinion Oil Seal Installer (9 1/2-Inch Ring Gear)
18. Pinion Seal Installer (8 1/2-Inch Ring Gear)
19. Wheel Bearing Nut Wrench

V0141

SECTION 4C

FRONT DRIVING AXLE

***NOTICE:** When fasteners are removed, always reinstall them at the same location from which they were removed. If a fastener needs to be replaced, use the correct part number for that application. If the correct part number fastener is not available, a fastener of equal size and strength (or stronger) may be used. Fasteners that are not reused and those requiring thread locking compound will be called out. The correct torque value must be used when installing fasteners that require it. If the above conditions are not followed, parts or system damage could result.*

CONTENTS

SUBJECT	PAGE
Description	4C-1
Diagnosis	4C-1
Road Test	4C-1
Tire Noises	4C-1
Engine or Exhaust Noises	4C-2
Test for Wheel Bearing Noise	4C-2
Test for Differential Bearing Noise	4C-2
Test for Pinion Bearing Noise	4C-2
On-Vehicle Service	4C-2
Axle Shaft Replacement	4C-2
Front Driving Axle Assembly Replacement	4C-3
Axle Joint Component Replacement	4C-4
Automatic Locking Hub Service	4C-5
Manual Locking Hub Replacement	4C-6
Manual Locking Hub Rebuild Procedure	4C-7
Specifications	4C-8
Special Tools	4C-9

DESCRIPTION

The front driving axle is a hypoid gear axle unit equipped with steering knuckles and an automatic or manual locking hub. The V-10/15 and 20/25 models use an 8 1/2-inch ring gear Corporate front axle, rated at 3600 pounds for the V-10/15 and 3800 pounds for the V-20/25. A Dana (60 Series) axle is used on the V-30/35 model and is rated at 4500 pounds capacity. The Dana axle has a 9 3/4-inch ring gear.

On all V-models, the manual locking hub is the base production design. Manual locking hubs must be engaged manually whenever four-wheel drive is selected. The automatic locking hub option is available only on V-1 and V-2 models, not on V-3 models.

DIAGNOSIS

ROAD TEST

- Check tires for irregular wear.
- Check tire pressure.
- Check axle lubricant level.
- Verify that the hubs are locked.
- Drive to warm up the front axle.
- Test at various speeds in drive, float, coast and while cornering.

TIRE NOISES

- Change the tire pressure to minimize noises.
- Drive over different road surfaces.
- Cross-switch the tires, if necessary.
- Smooth pavement minimizes tire noise.
- Snow tire treads and studs cause added noises.

ENGINE OR EXHAUST NOISES

- Drive slightly above the speed where the noise occurs, and place transmission in neutral.
- Let the engine speed drop to idle.
- Stop the vehicle.
- Run the engine at various speeds.

*TEST FOR WHEEL BEARING NOISE

- Drive the vehicle at low speed on a smooth road.
- Turn the vehicle to develop left and right motions, traffic permitting.
- Noise should change due to cornering loads.
- Jack up wheels to verify roughness at the tires.

For additional diagnostic information, refer to FRONT SUSPENSION AND AXLE (SEC. 3C).

*TEST FOR DIFFERENTIAL BEARING NOISE

- Drive the vehicle at low speed on a smooth road.
- Constant low pitch bearing noise may be heard.
- Noise should not change in reversing turns.
- The noise pattern should vary with the wheel speed.

For additional diagnostic information, refer to the 1991 Light Duty Trucks Unit Repair Manual.

*TEST FOR PINION BEARING NOISE

- Perform the test on a smooth road to minimize tire noises.
- Perform test at various speeds in drive, float, and coast.
- Whine noise should increase with speed.
- Noise pitch should be higher than differential noise.
- Rear pinion bearing noise may be louder on acceleration.
- Front pinion bearing noise may be louder on deceleration.
- Gear noise tends to peak in a narrow speed range.

For additional diagnostic information, refer to the 1991 Light Duty Trucks Unit Repair Manual.

* Bearing tests should be done in 2H (after 4H selection to lock hubs). This removes the transfer case whine.

ON-VEHICLE SERVICE

AXLE SHAFT REPLACEMENT

Remove or Disconnect (Figure 1)

- Raise the vehicle.

1. Wheel and tire assembly.
2. Brake caliper (40). Refer to HYDRAULIC FOUNDATION BRAKES (SEC. 5A2).

Important

- Support the brake caliper (40) so as not to stretch or damage the brake hose.

3. Hub lock mechanism (20). Refer to "Locking Unit Removal" in this section.
4. Hub and rotor assembly. Refer to FRONT SUSPENSION AND AXLE (SEC. 3C).
5. Inner bearing (31) and seal (32).
6. Splash shield (41) and brake bracket (39).
7. Spindle (38) from the steering knuckle. Refer to FRONT SUSPENSION AND AXLE (SEC. 3C).
8. Axle shaft (46).

Clean

- Inner and outer wheel bearing (31 and 26).
- Hub and rotor assembly (28).
- Spindle (38) and spindle bearing (37).

Inspect

- All parts and replace as necessary. Refer to FRONT SUSPENSION AND AXLE (SEC. 3C).

Important

- Lube the spindle bearing (37) and spindle (38) with the recommended lubricant. Refer to MAINTENANCE AND LUBRICATION (SEC. 0B).
- Pack the wheel hub and the inner and outer wheel bearing (31 and 26) with the recommended lubricant. Refer to MAINTENANCE AND LUBRICATION (SEC. 0B).

Install or Connect (Figure 1)

1. Seal (36) and spacer (35) to the axle shaft (46) (figure 2).
   - The spacer's (35) chamfer points toward the oil deflector (33).
2. Axle shaft (46) into the housing (42).
3. Spindle (38) to the knuckle (44). Be sure the seal (34) and oil deflector (33) are in place. Refer to FRONT SUSPENSION AND AXLE (SEC. 3C).
4. Brake bracket (39).
5. Splash shield (41).

NOTICE: See "Notice" on page 4C-1 of this section.

6. New washers (48) and nuts (49) to the studs.

Tighten

- Nuts (49) to 88 N•m (65 ft. lbs.).

7. Hub and rotor assembly (28).

- Adjust the wheel bearings (26 and 31). Refer to FRONT SUSPENSION AND AXLE (SEC. 3C).

8. Retainer (22) and ring (21).
9. Hub lock mechanism (20). Refer to "Locking Unit Installation" in this section.
10. Brake caliper (40). Refer to HYDRAULIC FOUNDATION BRAKES (SEC. 5A2).
    - Do not stretch or damage the brake hose.
11. Wheel and tire assembly.

- Lower the vehicle and test.

FRONT DRIVING AXLE ASSEMBLY REPLACEMENT

Remove or Disconnect (Figures 1 and 2)

- Raise the vehicle until the weight is removed from the front springs. Support the vehicle with jack stands placed behind the front springs.

1. Propeller shaft. Refer to PROPELLER SHAFT (SEC. 4A).
2. Connecting rod from the steering arm. Refer to FRONT SUSPENSION AND AXLE (SEC. 3C).
3. Brake caliper (40). Refer to HYDRAULIC FOUNDATION BRAKES (SEC. 5A2).
    - Support the brake caliper (40) so as not to stretch or damage the brake hose.
4. Shock absorbers from the axle brackets. Refer to FRONT SUSPENSION AND AXLE (SEC. 3C).
5. Front stabilizer bar. Refer to FRONT SUSPENSION AND AXLE (SEC. 3C).
6. Axle vent hose and clips (figure 2).
7. Nuts, washers, U-bolts, spacers and plates. Refer to FRONT SUSPENSION AND AXLE (SEC. 3C).
    - Support the axle with a jack.
8. Axle assembly out from under the vehicle.

Clean

- Axle assembly.

Inspect

- The assembly and repair or replace as necessary.

For differential repair procedures, refer to REAR AXLE (SEC. 4B1).

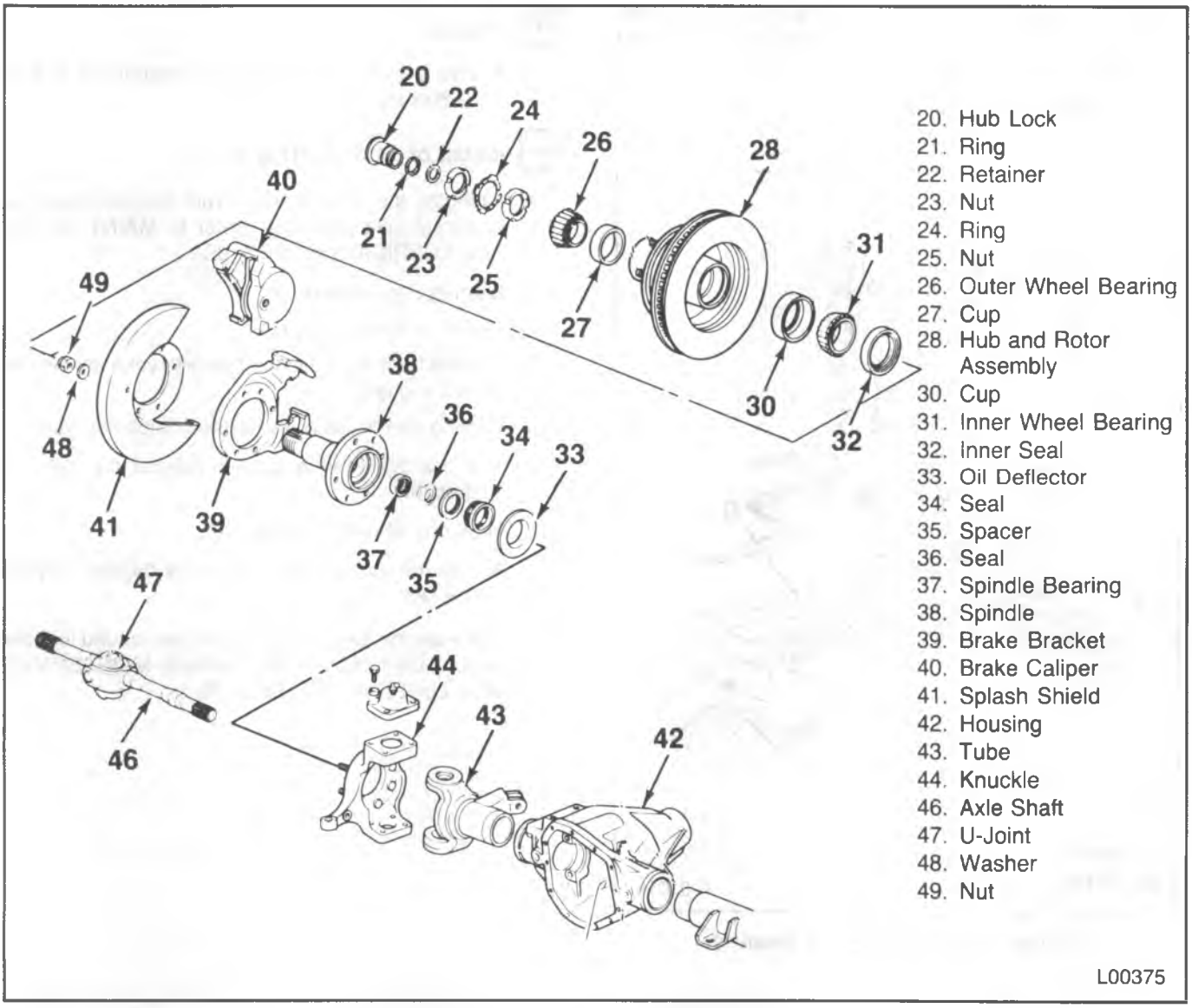

Figure 1—Front Driving Axle Components

Install or Connect (Figure 1)

NOTICE: For steps 1, 5, 6 and 7 see "Notice" on page 4C-1 of this section.

- Axle assembly positioned under the vehicle.

1. Plates, spacers, U-bolts, washers and nuts. Refer to FRONT SUSPENSION AND AXLE (SEC. 3C).
2. Axle vent hose and clips. Refer to figure 2.
3. Front stabilizer bar. Refer to FRONT SUSPENSION AND AXLE (SEC. 3C).
4. Shock absorbers to the axle brackets. Refer to FRONT SUSPENSION AND AXLE (SEC. 3C).
5. Brake caliper (40). Refer to HYDRAULIC FOUNDATION BRAKES (SEC. 5A2).
6. Connecting rod to the steering arm. Refer to FRONT SUSPENSION AND AXLE (SEC. 3C).
7. Propeller shaft. Refer to PROPELLER SHAFT (SEC. 4A).

Important

Check axle lubricant level at the filler plug hole. Lubricate as needed. Refer to MAINTENANCE AND LUBRICATION (SEC. 0B).

- Lower the vehicle.

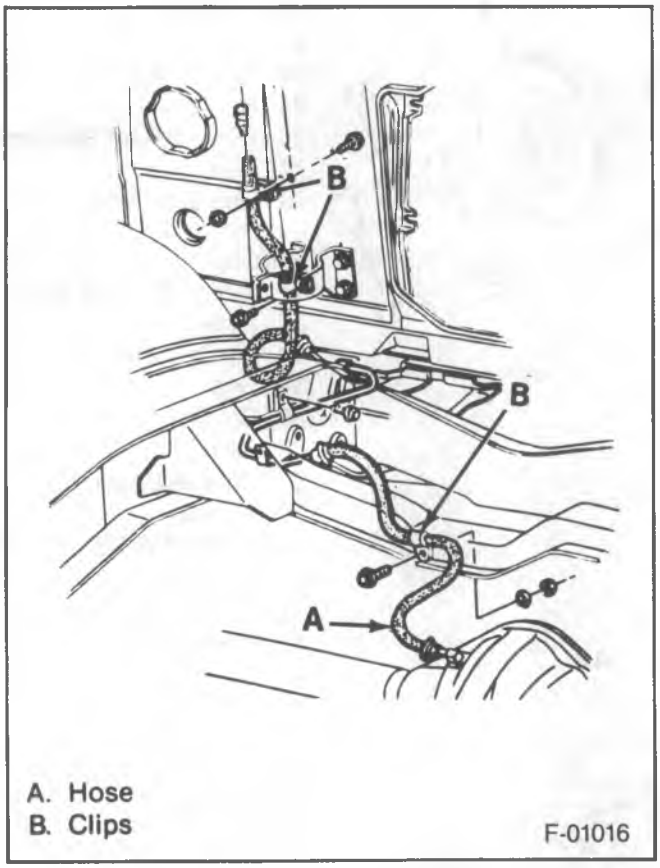

Figure 2—Axle Vent Hose Routing

AXLE JOINT COMPONENT REPLACEMENT

Remove or Disconnect (Figure 3)

- Raise the vehicle.

1. Axle shaft (46). Refer to "Axle Shaft Replacement" in this section.

- Support the shaft yoke in a bench vise or on a short piece of pipe.

2. U-joint (47).
   - Using a brass drift and soft hammer, tap the end of a U-joint bearing cup enough to drive the opposite bearing cup from the yoke.
   - Support the other yoke and drive the remaining U-joint bearing cup out in the same manner.

Clean

- The bearings and yokes.

Inspect

- The bearings and yokes. Replace parts as necessary.

Install or Connect (Figure 3)

- Lubricate the new bearings with the recommended universal joint lubricant. Refer to MAINTENANCE AND LUBRICATION (SEC. 0B).

1. Bearing cup in yoke ear.
2. U-joint in the bearing cup.
3. Another bearing cup in the opposite yoke ear with the U-joint aligned.
4. Bearing cup in each ear of the companion yoke.
   - Press the bearing cups in beyond the lock ring grooves.
5. Lock ring at each bearing cup.
   - Tap the yoke lightly to seat the bearings against the lock rings.

- Lubricate the U-joint with the recommended lubricant through the fitting provided. Refer to MAINTENANCE AND LUBRICATION (SEC. 0B).

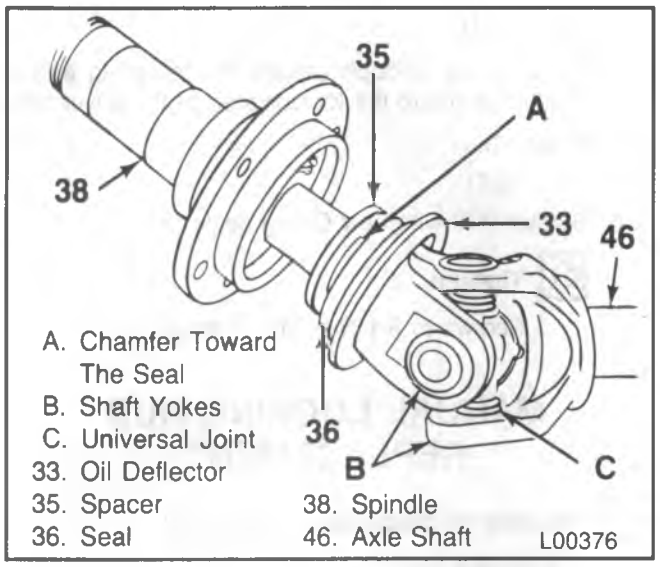

Figure 3—Axle Shaft Assembly

AUTOMATIC LOCKING HUB SERVICE

LOCKING UNIT REMOVAL

Remove or Disconnect (Figure 4)

1. Screws (50) and O-ring seals (51).
2. Cover (52).
3. Spring (54).
4. Bearing assembly, consisting of the inner race (55), the bearing (56) and retainer (58).
5. Seal (53).
6. Keeper (60) from the outer clutch housing (59).
7. Ring (57) to release the locking unit. Remove the ring by compressing it with needle noise pliers.
8. Locking unit from hub.
   - To facilitate removal, loosely thread two cover screws (50) into the outer clutch housing (59) perimeter, and use them to withdraw the unit.

If a wheel bearing adjustment is necessary, refer to the adjustment procedure specific to four wheel drive vehicles in FRONT SUSPENSION AND AXLE (SEC. 3C).

LOCKING UNIT DISASSEMBLY

Disassemble (Figure 4)

1. Retaining ring (77) and spacer (76) from inboard end of hub sleeve (67).
2. Drag sleeve (75)/brake band (74) assembly.
   - Rotate assembly until it releases from the locking unit.

Important

NEVER REMOVE THE BRAKE BAND (74) FROM THE DRAG SLEEVE (75). The spring tension of the brake band (74) could be changed if the coils are over expanded. The operation of the hub could also be affected.

3. Ring (73) from the groove in the outer clutch housing (59).
   - Position the unit so that the end containing the inner cage (72) is face down on the bench.
4. Snap ring (61), which will release the return spring (64), the retainers (63 and 65) and the retainer plate (62).
   - Position the opposite end of the unit on a 1 7/16-inch socket.
   - Press downward on the top perimeter of the assembly to expose the white plastic tab of the outer cage (71) which is seated in the inner cage (72) port.
5. Inner cage (72). Pry the plastic tab of the outer cage (71) from the port of the inner cage (72).
   - If excessive force is used, the plastic cage may deform or break.
6. Outer cage (71).
7. Cam follower. Pry the legs of the cam follower (70) from the flats of the clutch gear (66) to release the hub sleeve (67) and the conical spring (69).
8. Outer clutch housing (59).
9. Stop ring (68) from the hub sleeve (67) shaft.

LOCKING UNIT ASSEMBLY

Assemble (Figure 4)

1. Conical spring (69), seating the smaller end against the cam follower (70).
2. Hub sleeve (67).
   - Pack sleeve with a lubricant such as GM part no. 1052750, or equivalent.
3. Clutch gear (66), over the splines of the hub sleeve (67).
4. Cam follower (70), hooking the legs onto the flats of the clutch gear (66).
   - Lubricate the outer splines of the hub sleeve (67) with GM part no. 1052750, or equivalent.

Important

The gear (66) and spring (69) should slide freely over the splines of the sleeve (67).

5. Stop ring (68) to the hub sleeve (67).
6. Sleeve (67)/clutch gear (66) assembly into the outer clutch housing (59).
7. Outer cage (71), seating it under the rim of the outer clutch housing (59).
8. Inner cage (72).
9. Ring (73). Secure the assembly in a vise, if necessary.
10. Return spring assembly (62 through 65).
11. Ring (61) into hub sleeve (67) groove.
    - Lubricate the external coils of the brake band with GM part no. 1052750, or equivalent.
12. Drag sleeve (75)/brake bank (74) assembly.
13. Spacer (76) and retaining ring (77).
14. Snap ring (57), loosely over the outer clutch housing (59).
    - Lubricate the housing splines with GM part no. 1052750, or equivalent.

LOCKING UNIT INSTALLATION

Install or Connect (Figure 4)

1. Locking unit into hub cavity.
2. Ring (57). Compress tangs to permit seating.
   - The locking unit must be secured into position. To check, pull outward on the assembly. If it can be withdrawn by hand, the ring (57) is not yet seated.
3. Keepers (60).

Clean

The bearing (56)/race (55)/retainer (58) assembly.

- Pack the bearing with a lubricant such as GM part no. 1052750 or equivalent.

4. Bearing assembly (55, 56 and 58).
5. Spring (54).
   - Apply just enough grease to the spring end to position it into the locator area of the cover (52).
6. Seal (53).
7. Cover (52).
8. Screws (50) with new O-ring seals (51).

Tighten

Screws to 5.1 N•m (45 in. lbs.).

MANUAL LOCKING HUB REPLACEMENT

Remove or Disconnect (Figure 5)

1. Cap screws (91).
2. Cap assembly (92 through 98).
3. Lock ring (99).
4. Internal snap ring (85) from the hub.

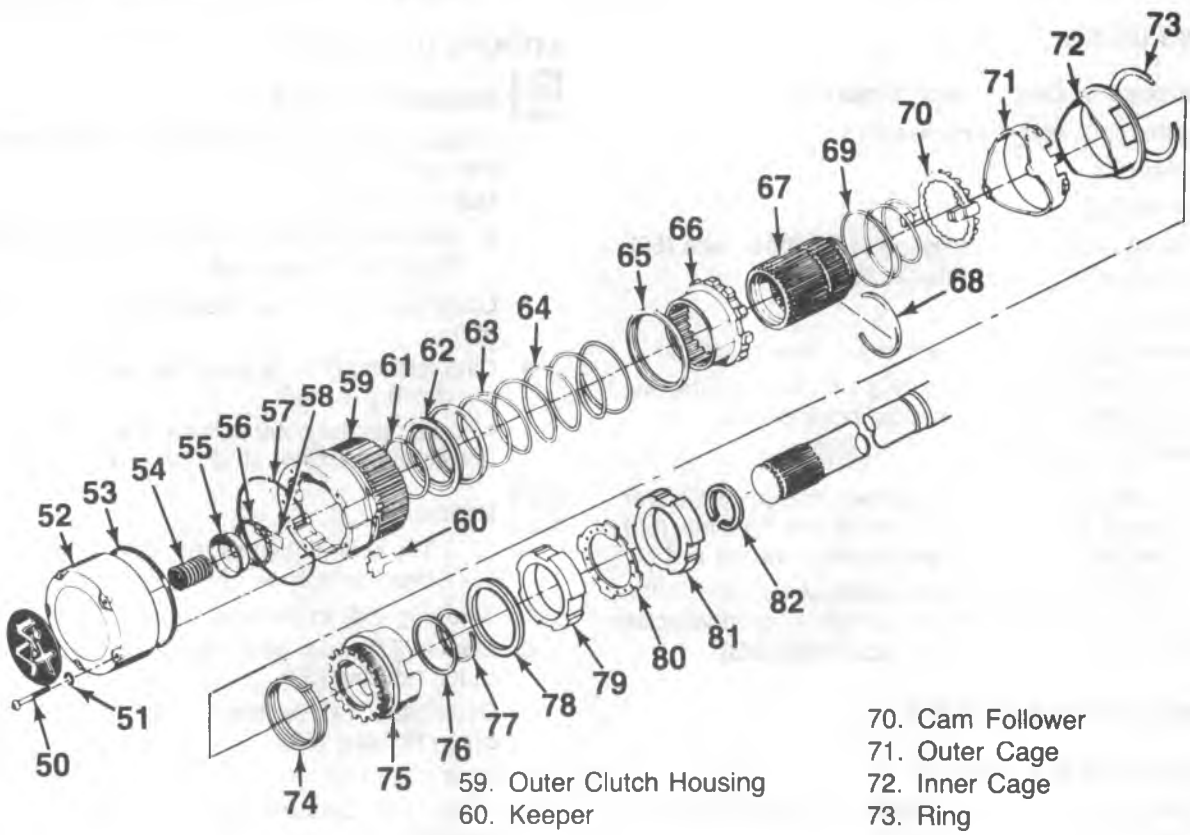

50. Screw
51. O-Ring Seal
52. Cover
53. Seal
54. Spring
55. Inner Race
56. Bearing
57. Ring
58. Retainer
59. Outer Clutch Housing
60. Keeper
61. Ring
62. Retainer Plate
63. Retainer
64. Return Spring
65. Retainer
66. Clutch Gear
67. Sleeve
68. Stop Ring
69. Conical Spring
70. Cam Follower
71. Outer Cage
72. Inner Cage
73. Ring
74. Brake Band
75. Drag Sleeve
76. Spacer
77. Retaining Ring
78. Washer
79. Adjusting Nut
80. Lock Ring
81. Nut
82. Ring

V0386

Figure 4—Automatic Hub Components

5. Body assembly (86 through 89).
   - To facilitate removal, loosely thread two screws (91) into the hub body (86) perimeter and use them to withdraw the body assembly.

Inspect

- All parts and replace as necessary.

Install or Connect

1. Body assembly (86 through 89).
2. Snap ring (90) to the axle shaft end.
3. Lock ring (99).
4. Cap assembly (92 through 97).
5. Cap screws (91).

Tighten

Screws to 5.1 N•m (45 in. lbs.).

MANUAL LOCKING HUB REBUILD PROCEDURE

- Outer hub lock knob assembly should be replaced only as a unit, because timing relationships are difficult to restore if disassembly occurs. The inner body may be disassembled for cleaning and component replacement.

Remove or Disconnect (Figure 5)

1. Screws (91).
2. Hub body (86).
3. Spring (88).
4. Internal snap ring (85).
5. Inner drive gear (87) with thrust washers.
6. Plastic sleeve.

Inspect

- All parts and replace as necessary.

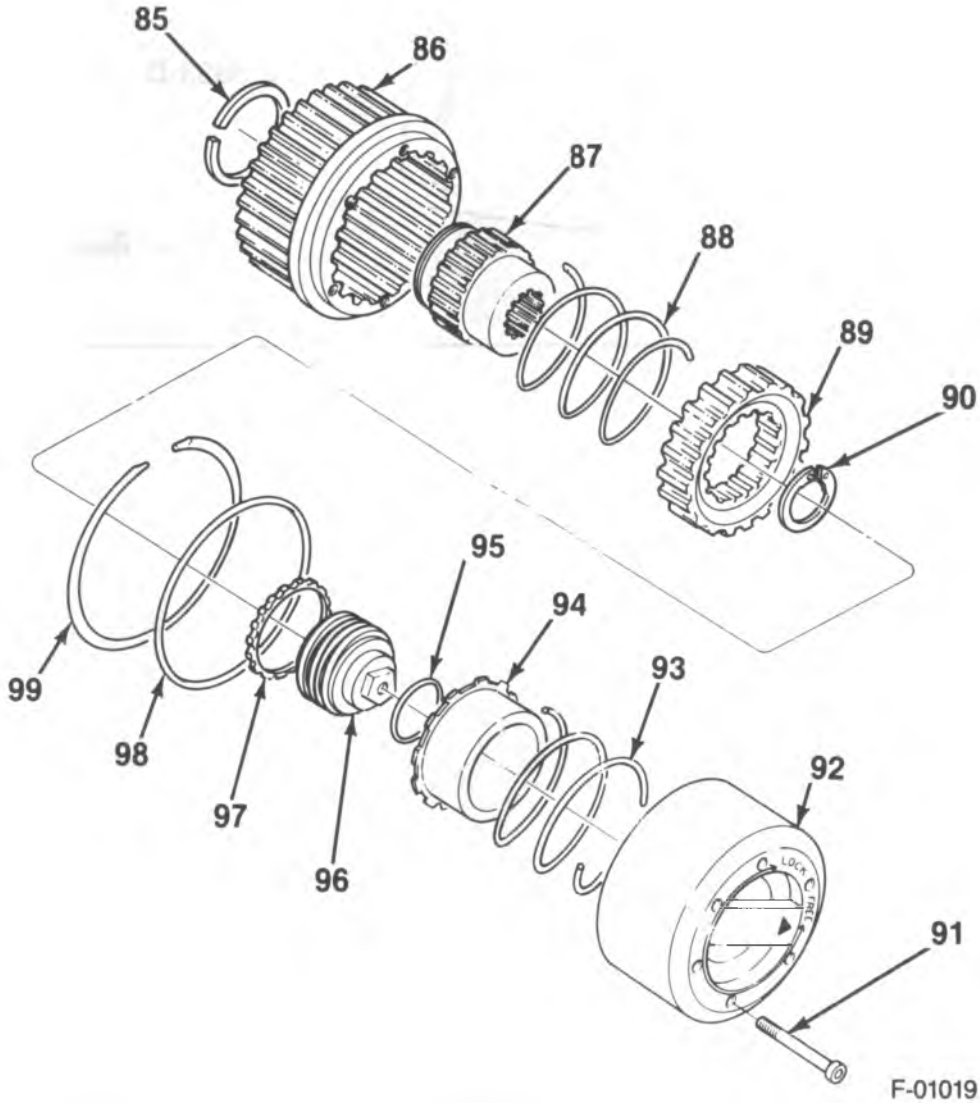

85. Internal Snap Ring
86. Hub Body
87. Inner Drive Gear
88. Spring
89. Clutch Ring
90. Axle Shaft Snap Ring
91. Screw
92. Hub Cap
93. Compression Spring
94. Clutch Cup
95. O-Ring Seal
96. Dial Screw
97. Clutch Nut
98. Seal
99. Lock Ring

Figure 5—Manual Hub Components

Install or Connect (Figure 5)

- Lubricate inner body parts with ATF or a light coating of wheel bearing grease.

1. Plastic sleeve.
2. Inner drive gear (87) with thrust washers.
3. Internal snap ring (85).
4. Spring (88).
5. Hub body (86).
6. Screws (91).

SPECIFICATIONS

	N·m	Ft. Lbs.
Nut — Splash Shield Retaining	88	65
Nut With Pin (Bearing Preload)	68	50
(Final Torque)	47	35
Cover Screws — Automatic or Manual Locking Hub	5.1	45 (inch lbs.)
Adjusting Nut — Axle Shaft	247	183

GMTB-0350-2L

SPECIAL TOOLS

1.

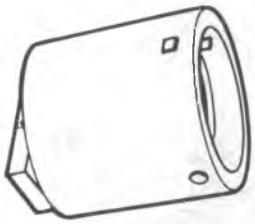

J 6893-D

1. Wheel Bearing Nut Wrench

L00378

SECTION 5

BRAKES

CONTENTS

SUBJECT	PAGE
Hydraulic Brakes	5A-1
Hydraulic Brake Booster Systems	5A1-1
Hydraulic Foundation Brakes	5A2-1
Rear Wheel Antilock Brake System	5A3-1
Parking Brakes	5C-1

SECTION 5A

HYDRAULIC BRAKES

NOTICE: When fasteners are removed, always reinstall them at the same location from which they were removed. If a fastener needs to be replaced, use the correct part number fastener for that application. If the correct part number fastener is not available, a fastener of equal size and strength (or stronger) may be used. Fasteners that are not reused, and those requiring thread locking compound will be called out. The correct torque value must be used when installing fasteners that require it. If the above conditions are not followed, parts or system damage could result.

CAUTION: When servicing wheel brake parts, do not create dust by grinding or sanding brake linings or by cleaning wheel brake parts with a dry brush or with compressed air. (A water dampened cloth should be used.) Many wheel brake parts contain asbestos fibers which can become airborne if dust is created during servicing. Breathing dust containing asbestos fibers may cause serious bodily harm.

CONTENTS

SUBJECT	PAGE
Brake Fluid	5A- 2
Substandard or Contaminated Fluid	5A- 2
Diagnosis	5A- 2
Road Testing the Brakes	5A- 2
On-Vehicle Service	5A- 5
Brake Fluid Leaks	5A- 5
Master Cylinder Inspection	5A- 5
Filling the Master Cylinder	5A- 5
Bleeding the Brake Hydraulic System	5A- 5
Flushing the Brake Hydraulic System	5A- 8
Brake Pipes and Hoses	5A- 8
Combination Valve	5A-10
Height-Sensing Brake Proportioning Valve	5A-13
Brake Pedal Assembly	5A-15
Checking Pedal Travel	5A-15
Brake Pedal Replacement	5A-15
Brake Pedal Rod Replacement	5A-19
Stoplamp Switch	5A-19
Master Cylinders	5A-21
Description	5A-21
Master Cylinder Replacement	5A-21
Bench Bleeding	5A-21
Specifications	5A-23
Special Tools	5A-24

BRAKE FLUID

CAUTION: Brake fluid may be irritating to skin or eyes, or may cause nausea, vomiting, or diarrhea if swallowed. In case of contact or swallowing take the following actions:

- **Eye contact – rinse eyes thoroughly with water.**
- **Skin contact – wash skin with soap and water.**
- **If swallowed – Contact a physician immediately.**
- **Give two glasses of water and induce vomiting by sticking finger down throat.**

NOTICE: Brake fluid will damage painted surfaces. Brake fluid can also damage electrical connections. Use shop cloths, suitable containers and fender covers to prevent brake fluid from contacting such surfaces. Always re-seal and wipe brake fluid containers clean to prevent slippage.

Use New Improved Delco Supreme 11 Brake Fluid (GM P/N 1052535) or an equivalent DOT-3 motor vehicle brake fluid. **DOT-5 brake fluid should not be used in the brake system.**

Brake fluid should always be stored in a closed container. Re-seal brake fluid containers immediately after use. Brake fluid left in an open or improperly sealed container will absorb moisture. This can lower the fluid's boiling point and may result in system contamination, corrosion or deterioration of rubber components.

SUBSTANDARD OR CONTAMINATED FLUID

Improper brake fluid, mineral oil or water in the fluid may cause the brake fluid to boil or the rubber components in the brake hydraulic system to deteriorate.

If the master cylinder piston seals are swollen, then the rubber parts have deteriorated. This deterioration may also be evidenced by swollen wheel cylinder boots, caliper boots or master cylinder reservoir diaphragm.

If deterioration of rubber parts is evident, disassemble all the brake hydraulic components and wash them with alcohol. Dry these parts with un-lubricated compressed air before assembly to keep alcohol out of the system. Replace all rubber parts in the system including hoses. Also check for fluid on brake linings. If any fluid is found, replace the linings.

If the master cylinder piston seals are satisfactory, check for leakage or excessive heat conditions. If no leakage or excessive heat conditions are found, drain the fluid, flush with new brake fluid, refill, and bleed the system.

Refer to MAINTENANCE AND LUBRICATION (SEC. 0B) for a description of the proper brake fluid.

DIAGNOSIS

ROAD TESTING THE BRAKES

BRAKE TEST

The brakes should be tested on a dry, clean, reasonably smooth and level roadway. A true test of brake performance cannot be made if the roadway is wet, greasy or covered with loose dirt so that all the tires do not grip the road equally. The testing will be adversely affected if the roadway is crowned so as to throw the weight of the vehicle toward the wheels on one side or if the roadway is so rough that the wheels tend to bounce.

Test the brakes at different vehicle speeds with both light and heavy pressure; however, avoid locking the wheels and sliding the tires on the roadway. Locked wheels and sliding tires do not indicate brake efficiency since heavily-braked turning wheels will stop the vehicle in less distance than locked wheels. More tire-to-road friction is present with a heavily-braked turning tire than with a sliding tire.

EXTERNAL CONDITIONS THAT AFFECT BRAKE PERFORMANCE

1. **Tires** – Tires having unequal contact and grip on the road will cause unequal braking. The tires must be equally inflated and the tread pattern of the right and left tires must be approximately equal.
2. **Vehicle Loading** – When the vehicle has unequal loading, the most heavily loaded wheels require more braking power than the others.
3. **Front Wheel Bearings** – Loose front wheel bearings permit the disc to tile and have spotty contact with the linings, causing erratic action.
4. **Front End Alignment** – Misalignment of the front end, particularly in regard to limits on camber and caster, will cause the brakes to pull to one side.

DIAGNOSIS

PROBLEM	POSSIBLE CAUSE	CORRECTION
Uneven Brake Action (Brakes Pull)	1. Incorrect tire pressure.	1. Inflate evenly on both sides to specifications.
	2. Front end out of alignment.	2. Check and align to specifications.
	3. Loose suspension parts.	3. Check all suspension mountings.
	4. Worn out brake lining.	4. Replace with lining of correct material.
	5. Incorrect lining material.	5. Replace with linings of correct material.
	6. Malfunctioning caliper assembly.	6. Check for frozen or sluggish pistons and the lubrication of the retainer bolts. Caliper should slide.
	7. Loose calipers.	7. Check and torque.
	8. Contaminated brake linings.	8. Repair as necessary. Replace linings in complete axle sets.
	9. Malfunctioning rear brakes.	9. Check for inoperative self adjusters. Weak return springs. Leaking wheel cylinders.
	10. Leaking wheel or piston cylinder seal.	10. Repair as necessary.
	11. Restricted brake tubes or hoses.	11. Check for collapsed rubber hoses or damaged lines. Repair as necessary.
	12. Unmatched tires on the same axle.	12. Same style tires with about the same tread should be used on the same axle.
Brakes Squeak	1. Worn out linings.	1. Replace linings.
	2. Glazed brake lining.	2. Replace linings.
	3. Heat spotted rotors or drums.	3. Check per instructions. If within specifications machine the rotor or drum.
	4. Weak or incorrect brake shoe retention springs.	4. Replace with new retention springs.
	5. Contaminated brake linings.	5. Repair as necessary. Replace linings in complete axle sets.
	6. Incorrect lining material.	6. Replace with linings of correct material.
	7. Brake assembly attachments missing or loose.	7. Repair as necessary.
	8. Excessive brake lining dust.	8. Clean dust from brake assembly.
Brake Pedal Pulsates	1. Excessive rotor lateral runout.	1. Check per instructions. If within specifications machine the rotor.
	2. Rear drums out of round.	2. Check per instructions. If within specifications machine the drum.
	3. Heat spotted rotors or drums.	3. Check per instructions. If within specifications machine the rotor or drum.
	4. Incorrect wheel bearing adjustments.	4. Repair as necessary.
	5. Out of balance wheel assembly attachments missing or loose.	5. Repair as necesary.
	6. Brake assembly attachments missing or loose.	6. Repair as necessary.
Excessive Pedal Effort	1. Leaking vacuum system.	1. Repair as necessary.
	2. Malfunctioning power brake unit.	2. Repair as necessary.
	3. Worn out linings.	3. Replace linings.
	4. Malfunctioning proportioning valve.	4. Repair as necessary.
	5. Incorrect lining material.	5. Replace with linings of correct materials.
	6. Incorrect wheel cylinder.	6. Replace with corrrect size wheel cylinder.

GMTB-4100-A

DIAGNOSIS (CONT.)

PROBLEM	POSSIBLE CAUSE	CORRECTION
Excessive Pedal Travel	1. Insufficient fluid in master cylinder reservoir.	1. Fill reservoir with approved brake fluid. Check for leaks and air in the system. Check indicator light.
	2. Air in brake system.	2. Check for leaks in lines, wheel cylinders, or master cylinder. Bleed the system.
	3. Malfunctioning self adjusters.	3. Repair as necessary.
	4. Master cylinder.	4. Replace or repair as necessary.
	5. Incorrect wheel bearing adjustment.	5. Repair as necessary.
	6. Improperly adjusted master cylinder pushrod.	6. Adjust master cylinder pushrod.
Brakes Drag	1. Malfunctioning caliper assembly.	1. Check for frozen or sluggish pistons and the lubrication of the retainer bolts. Caliper should slide.
	2. Contaminated or improper brake fluid.	2. Repair as necessary.
	3. Improperly adjusted parking brakes.	3. Repair as necessary.
	4. Restricted brake tube or hoses.	4. Check for collapsed rubber hoses or damaged lines. Repair as necessary.
	5. Malfunctioning proportioning valve.	5. Replace or repair as necessary.
	6. Malfunctioning self adjusters.	6. Repair as necessary.
	7. Malfunctioning master cylinder.	7. Repair as necessary.
	8. Improperly adjusted master cylinder pushrod.	8. Adjust pushrod length.
Brake Indicator Light Comes On	1. Air in the brake system.	1. Check fluid level. Check for leaks in lines, wheel cylinders, or master cylinder. Bleed the system.
	2. Malfunctioning master cylinder.	2. Check for faulty metering valve, or leaking. Repair as necessary.
	3. Contaminated or improper brake fluid.	3. Repair as necessary.
	4. Parking brake on or not fully released.	4. Check parking brake. Repair as necessary.
	5. Worn out brake lining.	5. Replace linings.
	6. Incorrect wheel bearing adjustment.	6. Repair as necessary.
	7. Malfunctioning self adjusters.	7. Repair as necessary.
	8. Brake assembly attachments missing or loose.	8. Replace or repair as necessary.
	9. Improperly adjusted master cylinder pushrod.	9. Adjust pushrod length.
	10. RWAL System malfunction.	10. Refer to REAR WHEEL ANTILOCK BRAKE SYSTEM (SEC. 5A3).
Excessive Brake Pedal Effort	1. Loose or broken power steering pump belt.	1. Tighten or replace the belt.
	2. No fluid in the power steering reservoir.	2. Fill reservoir and check for external leaks.
	3. Leaks at Hydro-Boost tube fittings.	3. Tighten fittings or replace tube seats, if faulty.
	4. External leakage at the accumulator.	4. Replace seal and retainer.
	5. Faulty booster piston seal causing leakage at the booster flange vent.	5. Overhaul with new seal or input rod and piston assembly.
	6. Faulty booster input rod seal with leakagae at the input rod end.	6. Overhaul with new seal kit.
	7. Fautly booster cover seal with leakage between the housing and cover.	7. Overhaul with new seal kit.
	8. Fautly booster spool plug seal.	8. Overhaul with spool plug seal kit.

ON-VEHICLE SERVICE

BRAKE FLUID LEAKS

With engine running at idle and the transmission in "Neutral," depress the brake pedal and hold a constant foot pressure on the pedal. If pedal gradually falls away with the constant pressure, the hydraulic system may be leaking.

Check the master cylinder fluid levels. While a slight drop in reservoir levels will result from normal lining wear, an abnormally low level in either reservoir indicates a leak in the system. The hydraulic system may be leaking internally as well as externally. Refer to "Master Cylinder Inspection." Also the system may appear to pass this test but still have slight leakage.

If fluid levels are normal, check the vacuum booster pushrod length. If an incorrect length pushrod is found, adjust or replace the pushrod. Check the brake pedal travel and the parking brake adjustment.

When checking the fluid level, the master cylinder rear reservoir may be as low as 25 mm (one inch) from the top if the front linings are worn. This is not abnormal.

MASTER CYLINDER INSPECTION

These tests will not determine all master cylinder malfunctions. Refer to Diagnosis of the Brake System if the problem is not found with these tests.

1. Check for a cracked master cylinder casting or brake fluid around the master cylinder. Leaks are indicated only if there is at least a drop of fluid. A damp condition is not abnormal.
2. Check for binding pedal linkage and incorrect pushrod length. If both of these are satisfactory, disassemble the master cylinder and check for swollen or elongated primary piston seal(s). If swollen seals are found, substandard or contaminated brake fluid is suspected. If contaminated, all components should be disassembled and cleaned; all rubber components should be replaced and all pipes flushed.

FILLING THE MASTER CYLINDER

The master cylinder reservoirs must be kept properly filled to insure adequate reserve and to prevent air from entering the hydraulic system. However, because of expansion due to heat absorbed from brakes and from engine, the reservoir must not be overfilled.

Thoroughly clean the reservoir cover before removal to avoid getting dirt into reservoirs. Remove the cover and diaphragm. Add fluid as required to bring the level to within 6 mm (1/4-inch) of the lowest portion of the top of each reservoir. Fill to the full mark or to the top of the reservoir divider. Use Delco Supreme No. 11 Hydraulic Brake Fluid or equivalent. Fluid must be "DOT 3."

NOTICE: Do not use fluid which contains a petroleum base. Do not use a container which has been used for petroleum based fluids or a container which is wet with water. Petroleum based fluids will cause swelling and distortion of rubber parts in the hydraulic brake system and water will mix with brake fluid, lowering the fluid boiling point. Keep all fluid containers capped to prevent contamination.

Improper brake fluid, mineral oil or water in the fluid may cause the brake fluid to boil or the rubber components in the hydraulic system to deteriorate.

If primary piston cups are swollen, then rubber parts have deteriorated. This deterioration may also be evidenced by swollen wheel cylinder piston cups on the drum brake wheels or master cylinder cover diaphragm.

If deterioration of rubber is evident, disassemble all hydraulic parts and wash with alcohol. Dry these parts with lubricated compressed air before assembly to keep alcohol out of the system. Replace all rubber parts in the system, including hoses. Also, when working on the brake mechanisms, check for fluid on the linings. If excessive fluid is found, replace the linings.

If master cylinder piston seals are satisfactory, check for leakage or excessive heat conditions. If condition is not found, drain fluid, flush with brake fluid, refill and bleed system.

BLEEDING THE BRAKE HYDRAULIC SYSTEM

A bleeding operation is necessary if air has been introduced into the hydraulic brake system.

It may be necessary to bleed the system at all four wheels if air has been introduced by a low fluid level condition in the master cylinder or if the brake pipes have been disconnected at either the master cylinder or the combination valve. If a pipe is disconnected at one wheel, then only bleed that particular wheel.

The time required to bleed the hydraulic system when the master cylinder is removed can be reduced if the master cylinder is filled with fluid and as much air as possible is bled from the cylinder before installing it on the vehicle.

MANUAL BLEEDING

If the vehicle is equipped with power brakes, deplete the vacuum reserve by applying the brakes several times with the engine off.

Use extreme care to prevent brake fluid from contacting any painted surface.

1. Fill the master cylinder reservoirs with brake fluid specified in MAINTENANCE AND LUBRICATION (SEC. 0B).
   - Maintain the fluid level in the reservoir during the bleeding operation.
2. If the master cylinder is suspected to have air in the bore, it must be bled before any wheel cylinder or caliper.
   - Remove the forward brake pipe connection at the master cylinder.
   - Allow brake fluid to flow from the connector port.
   - Connect the brake pipe but do not tighten.
3. Slowly depress the brake pedal, allowing the air to bleed from the loose fitting.
   - Tighten the fitting before releasing the pedal.
   - Wait 15 seconds and repeat this sequence, including the 15-second wait, until all the air is purged from the bore.

4. After all the air has been removed from the forward connection, disconnect the rear pipe.
   - Allow brake fluid to flow from the connector port.
   - Connect the brake pipe but do not tighten.
5. Slowly depress the brake pedal, allowing the air to bleed from the loose fitting.
   - Tighten the fitting before releasing the pedal.
   - Wait 15 seconds and repeat this sequence, including the 15-second wait, until all the air is purged from the bore.
6. If it is known that the calipers and wheel cylinders do not contain any air, then it will not be necessary to continue; otherwise, bleed each wheel in the following sequence:
   - Right rear.
   - Left rear.
   - Right front.
   - Left front.
7. Attach a hose to the wheel cylinder/caliper bleeder screw.
   - Immerse the opposite end of the hose into a container partially filled with clean brake fluid.
8. Slowly depress the brake pedal one time and hold.
   - Loosen the bleeder screw to purge the air from the wheel cylinder/caliper.
   - Tighten the bleeder screw and slowly release the pedal.
   - Wait 15 seconds, then repeat this sequence, including the 15-second wait, until all the air is purged from the wheel cylinder/caliper.
9. Continue steps 7 and 8 at each wheel until the entire brake system has been bled.
10. Check the brake pedal for "sponginess" and the brake warning lamp for an indication of unbalanced pressure. Repeat the entire bleeding procedure to correct either of these two conditions.

PRESSURE BLEEDING

The pressure-bleeding equipment must be of the diaphragm type. It must have a rubber diaphragm between the air supply and the brake fluid to prevent air, moisture, oil and other contaminants from entering the hydraulic system. Also, adapters are needed depending on the type of master cylinder used.

Tools Required:

J 29567 Brake Bleeder Adapter (Plastic Reservoir)

J 23518-01 Brake Bleeder Adapter (Cast-Iron Reservoir)

J 35856 Combination Valve Depressor (R/V 1 and 2 Models)

J 23709 Combination Valve Depressor (R/V 3 and P Models)

NOTICE: It is very important that the correct master cylinder bleeder adapter be used to avoid possible damage to the master cylinder reservoir.

1. Fill the pressure tank at least 1/3 full of brake fluid. The bleeder must be rebled each time fluid is added.
   - Charge the bleeder to 140-170 kPa (20 to 25 psi).
2. Use J 35856 or J 32709 to depress and hold the valve stem on the combination valve during the bleeding operation (figure 1).
   - Install the correct bleeder adapter (figures 3 and 4).

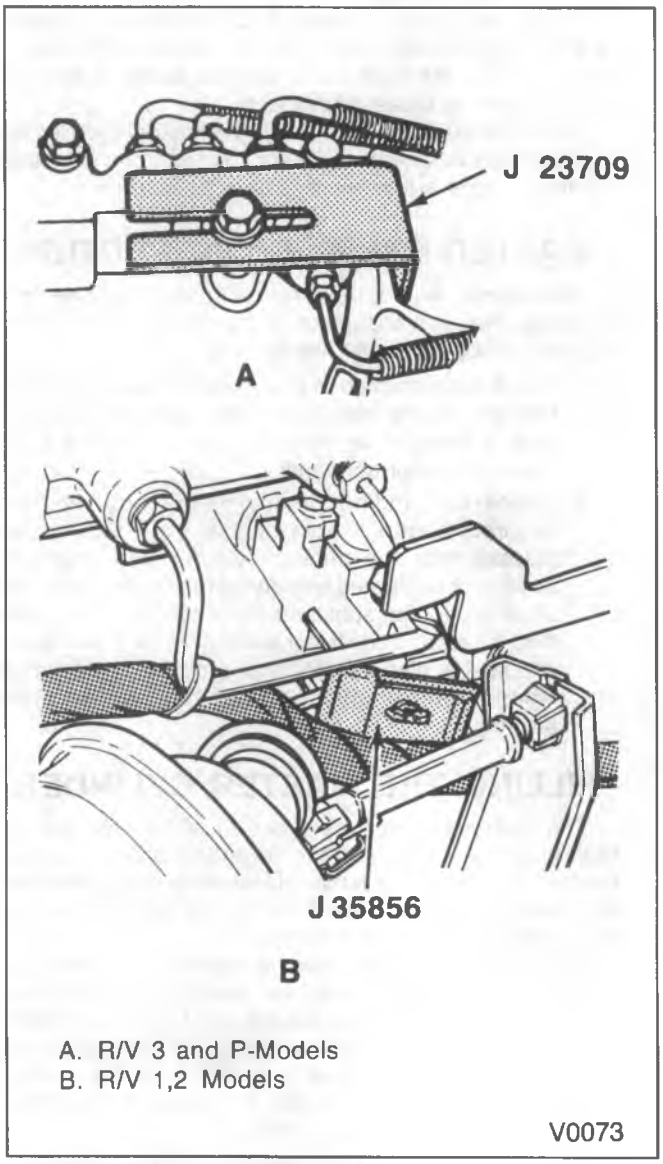

Figure 1—Using Combination Valve Depressor

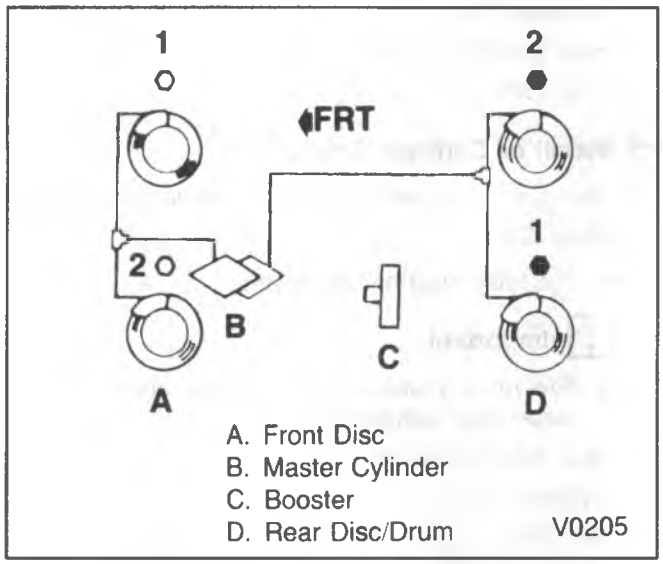

Figure 2—Brake Bleeding Sequence

3. Bleed each wheel in the following sequence:
   - Right rear.
   - Left rear.
   - Right front.
   - Left front.
4. Connect the hose from the bleeder to the adapter at the master cylinder.
   - Open the tank valve.
5. Attach a hose to a brake bleeder screw.
   - Immerse the opposite end of the hose into a container partially filled with clean brake fluid.
6. Open the bleeder screw at least 3/4 of a turn and allow the fluid to flow until no air is seen in the fluid.
   - Close the bleeder screw.
7. Repeat step 6 at all wheels.
8. Check the brake pedal for "sponginess." Repeat the entire bleeding procedure if this condition is found.
9. Remove J 35856.
   - Disconnect the line from the bleeder adapter.
   - Remove bleeder adapter.
10. Fill the master cylinder to the proper level with brake fluid.

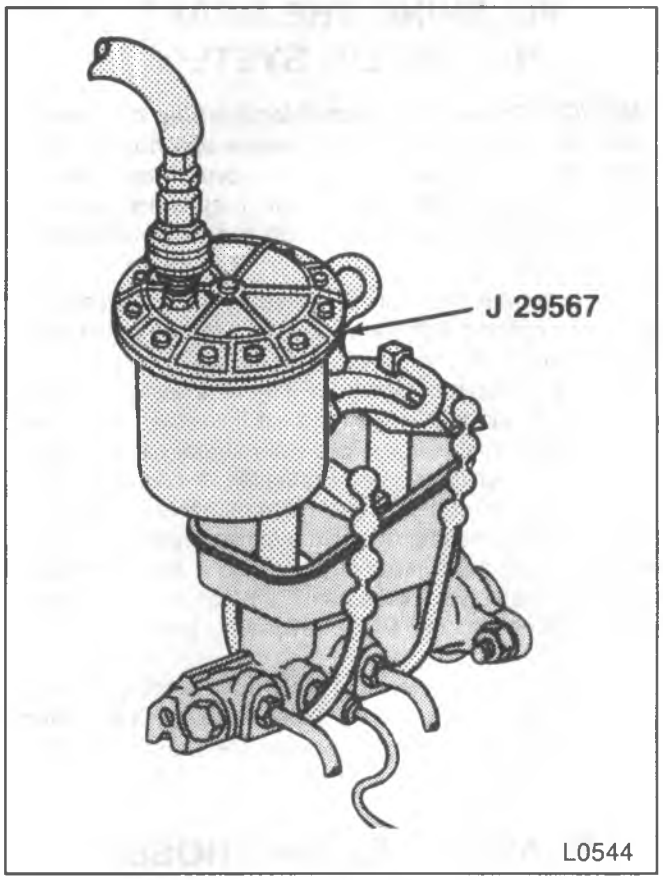

Figure 3—Plastic Reservoir Bleeder Adapter

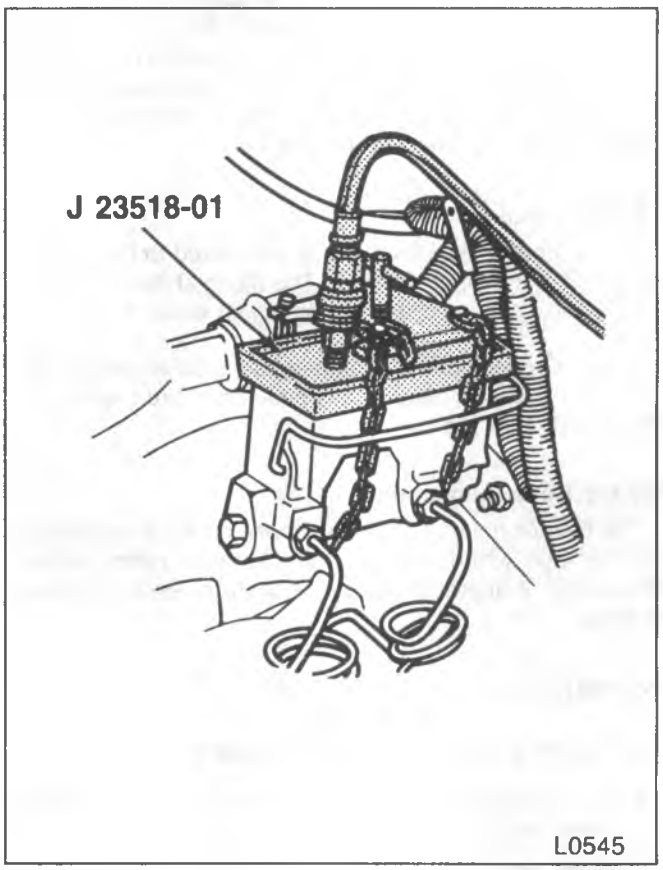

Figure 4—Cast-Iron Bleeder Adapter

FLUSHING THE BRAKE HYDRAULIC SYSTEM

NOTICE: Do not use alcohol for flushing the system or cleaning assemblies where alcohol could be trapped and subsequently contaminate the brake fluid. Contaminated fluid may then cause the eventual failure of the rubber components in the system.

It is recommended that the entire hydraulic system be thoroughly flushed with clean brake fluid whenever new parts are installed in the hydraulic system.

Flushing is also recommended if there is any doubt as to the grade of fluid in the system or if fluid has been used which contains the slightest trace of mineral oil. Flush the system whenever there is any question of contamination.

Flushing is performed at each bleeder valve in the same manner as the bleeding operation, except that the bleeder valve is opened 1 1/2 turns and the fluid is forced through the lines and bleeder valves until it emerges clear in color. Refer to "Bleeding the Brake Hydraulic System" in this section.

Check master cylinder fluid level after flushing at each valve and replenish if required. When flushing is completed at all bleeder valves, make certain the master cylinder reservoir is filled to the proper level.

BRAKE PIPES AND HOSES

The hydraulic brake system components are interconnected by special steel piping and flexible hoses. Flexible hoses are used between the frame and the front calipers, and the frame and rear axle. When the hydraulic pipes have been disconnected for any reason, the brake system must be bled after reconnecting the pipe. Refer to "Bleeding the Brake Hydraulic System" in this section.

FLEXIBLE HOSE

On the front brakes the hose is connected to the caliper with a bolt and copper washers. The fitting at the other end of the hose is secured at the frame with either a nut or a clip.

At the rear axle, one end of the hose is connected to the axle with a bolt; the other end is secured at the frame with either a nut or a clip.

Flexible Hose Inspection

The flexible hoses should be inspected for any signs of road damage which will cause cracks and chafing of the outer cover. If any of these conditions are visible, replace the hose.

Hose Replacement

Remove or Disconnect (Figure 5)

- Clean dirt, grease, and other foreign material from the hose fittings at both ends.

1. Steel pipe.
2. Clip or nut (31).
3. Bolt (34).
4. Washers (33).
5. Hose bracket nut (60).
6. Hose (32).

Install or Connect (Figure 5)

- Use new copper washers when installing the hose.

1. Hose (32).
   - The hose must not be twisted.

   Important

   - The hose installation must not contact any suspension components.
2. Hose bracket nut (60).
3. Washers (33).
4. Bolt (34).
5. Clip or nut (31).
6. Steel pipe.

- Bleed the brakes. Refer to "Bleeding the Brake Hydraulic System" in this section.

BRAKE PIPES

When replacing a steel brake pipe, always use steel piping which is designed to withstand high pressure and resist corrosion. The same size pipe must be used as the one removed.

NOTICE: Never use copper tubing for hydraulic brake lines because copper is subject to fatigue cracking and corrosion, which could result in brake failure.

Brake pipes that run parallel to each other must maintain a 6 mm (1/4-inch) clearance.

Pipe Flaring (Figures 6 and 7)

Tool Required:

J 23530 Flaring Tool or equivalent

In order to ensure a proper flare, flaring tool J 23530 or equivalent must be used (figure 7). When using the tool, instructions furnished by the tool manufacturer should be followed. Always inspect newly formed flares for cracks or malformations which might cause leaks. After flaring, blow out the brake pipe with compressed air before installing it on the vehicle.

NOTICE: A double-lap flaring tool must be used, as single flaring tools cannot produce a flare strong enough to hold the necessary pressure.

1. Use steel pipe and fittings of the correct size. The outside diameter of the pipe is used to specify the size.
2. Cut the pipe to length. Add 3 mm (1/8-inch) to the length for each flare.
3. Flare the pipe ends by following the instructions with the tool.
4. Bend the pipe to match the old pipe using a pipe bender.

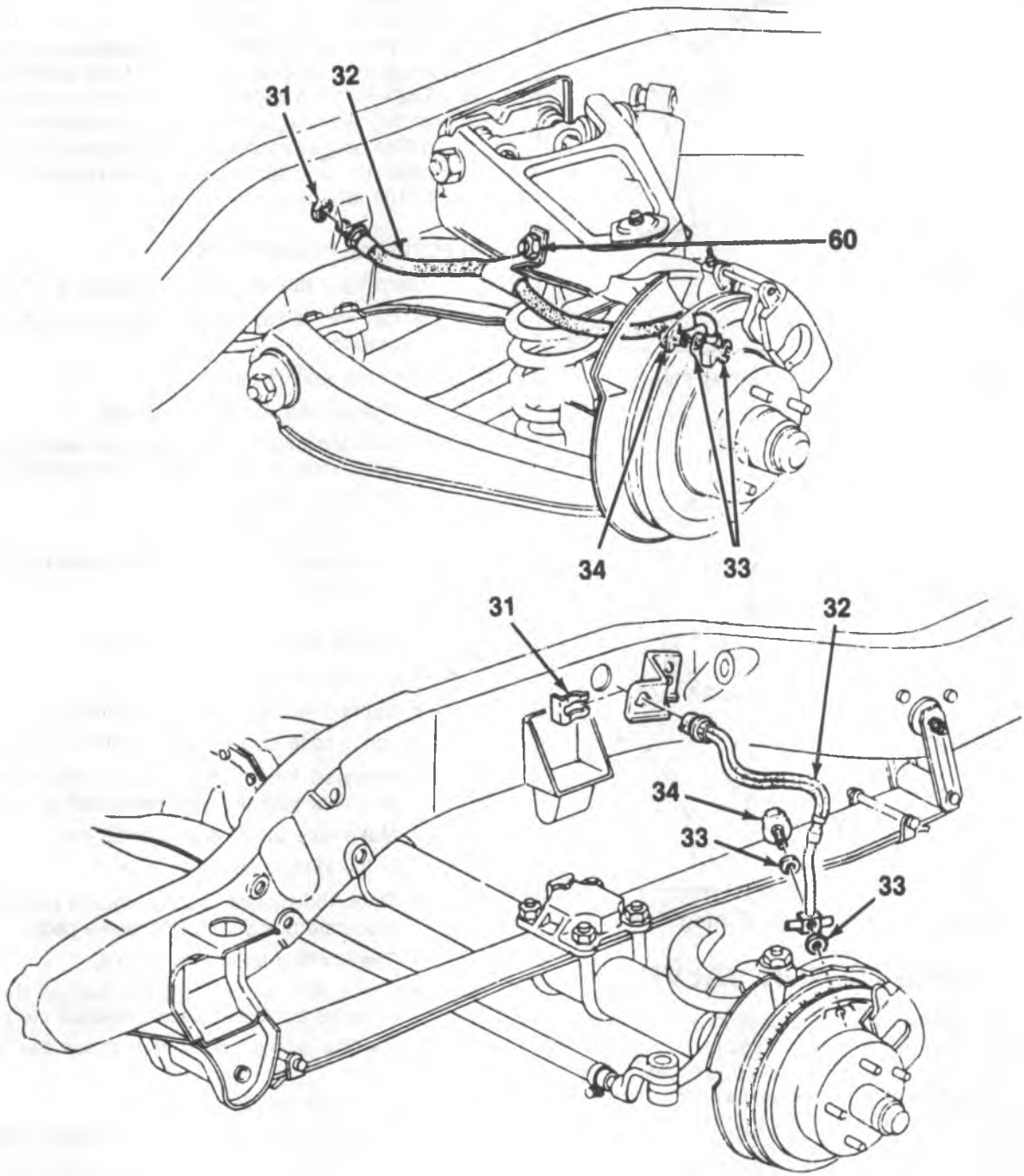

31. Nut of Clip
32. Flex Hose
33. Washer
34. Bolt
60. Nut

L0764

Figure 5 – Front Caliper Flexible Hoses

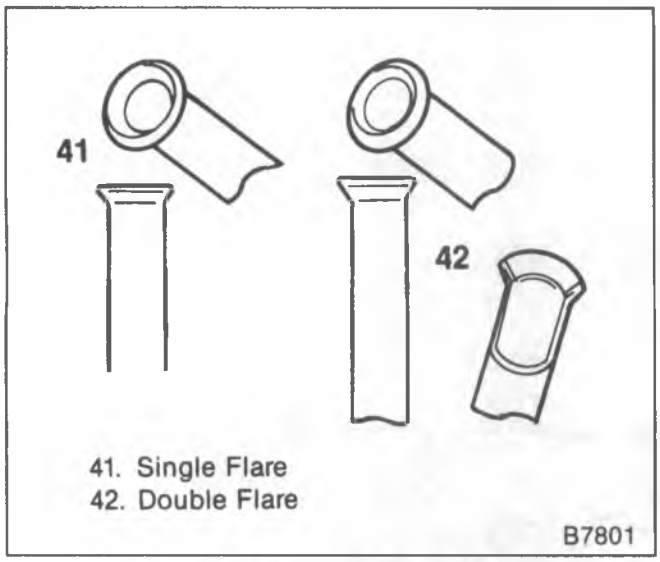

Figure 6 – Single and Double Flares

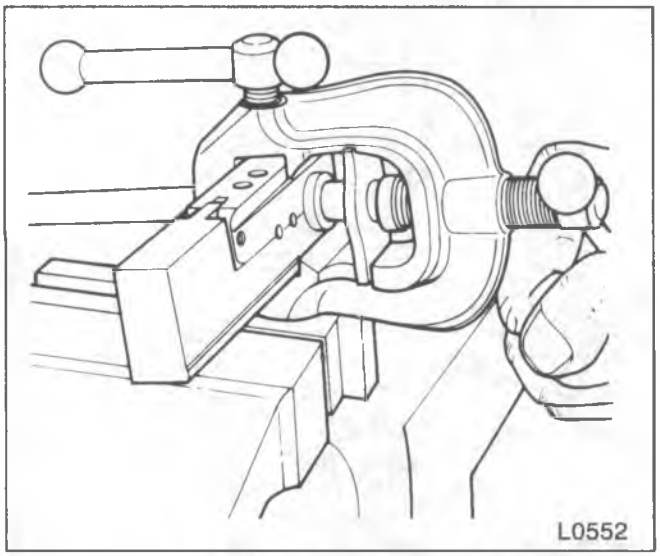

Figure 7 – Using a Pipe Flaring Tool

COMBINATION VALVE

The combination valve is comprised of three sections, each serving a different function (figures 8 and 9).

The metering or hold-off section of the valve limits the pressure to the front disc brakes until a predetermined front input pressure is reached, enough to overcome the rear shoe retractor springs. There is no restriction to the inlet pressures below 20 kPa (3 psi) to allow for pressure equalization during the no-apply periods.

The proportioning section of the combination valve proportions outlet pressure to the rear brakes after a predetermined rear input pressure has been reached. This is done to prevent rear wheel lock-up on the vehicles with light rear wheel loads.

The valve is designed to have a bypass feature which ensures full system pressure to the rear brakes in the event of a front brake system malfunction. Full front pressure is retained in the event of rear malfunction.

The pressure-differential warning switch is designed to constantly compare front and rear brake pressure from the master cylinder and energize the warning lamp on the instrument panel in the vent of a front or rear system malfunction. The valve and switch are designed so the switch will latch in the "warning" position once a malfunction has occurred. The only way the lamp can be turned off is to repair the malfunction and apply a pedal force required to develop about 3102 kPa (450 psi) line pressure.

ELECTRICAL CIRCUIT TEST

1. Disconnect the wire from the switch on the valve.
   - Connect a jumper wire from the switch wire to ground.
2. Turn the ignition switch to "ON."
   - The warning lamp should light.
   - If the lamp will not light check the bulb. If the bulb is good, refer to LIGHTING SYSTEMS (SEC. 8B) for further diagnosis.
3. Turn the ignition off.
   - Disconnect jumper wire and connect the wire to the switch terminal.

Valve Warning Switch Test (Figure 10)

- Raise the vehicle.
  - Support with suitable safety stands.

1. Attach a hose to a rear brake bleeder screw.
   - Immerse the opposite end of the hose into a container partially filled with clean brake fluid.
   - Make sure the master cylinder reservoir is full.
2. Turn the ignition switch to "ON."
   - Open the bleeder screw while a helper applies moderate pressure to the brake pedal.
   - The warning lamp should light.
   - Close the bleeder screw before the helper releases the brake pedal. Release the pedal.
3. Apply the brake pedal with moderate to heavy pressure.
   - The lamp should go out.
4. Attach a hose to a front brake bleeder screw.
   - Immerse the opposite end of the hose into a container partially filled with clean brake fluid.
   - Make sure the master cylinder reservoir is full.

5. Open the bleeder screw while a helper applies moderate pressure to the brake pedal.
   - The warning lamp should light.
   - Close the bleeder screw before the helper releases the brake pedal. Release the pedal.
6. Apply the brake pedal with moderate to heavy pressure.
   - The lamp should go out.
7. Turn the ignition key to "OFF."
   - If the warning lamp does not light during steps 2 and 5 but does light when a jumper is connected to ground, the warning switch portion of the valve is malfunctioning. Do not disassemble any portion of the valve. It must be replaced.
   - Lower the vehicle.
   - Check and fill the master cylinder to the proper level.

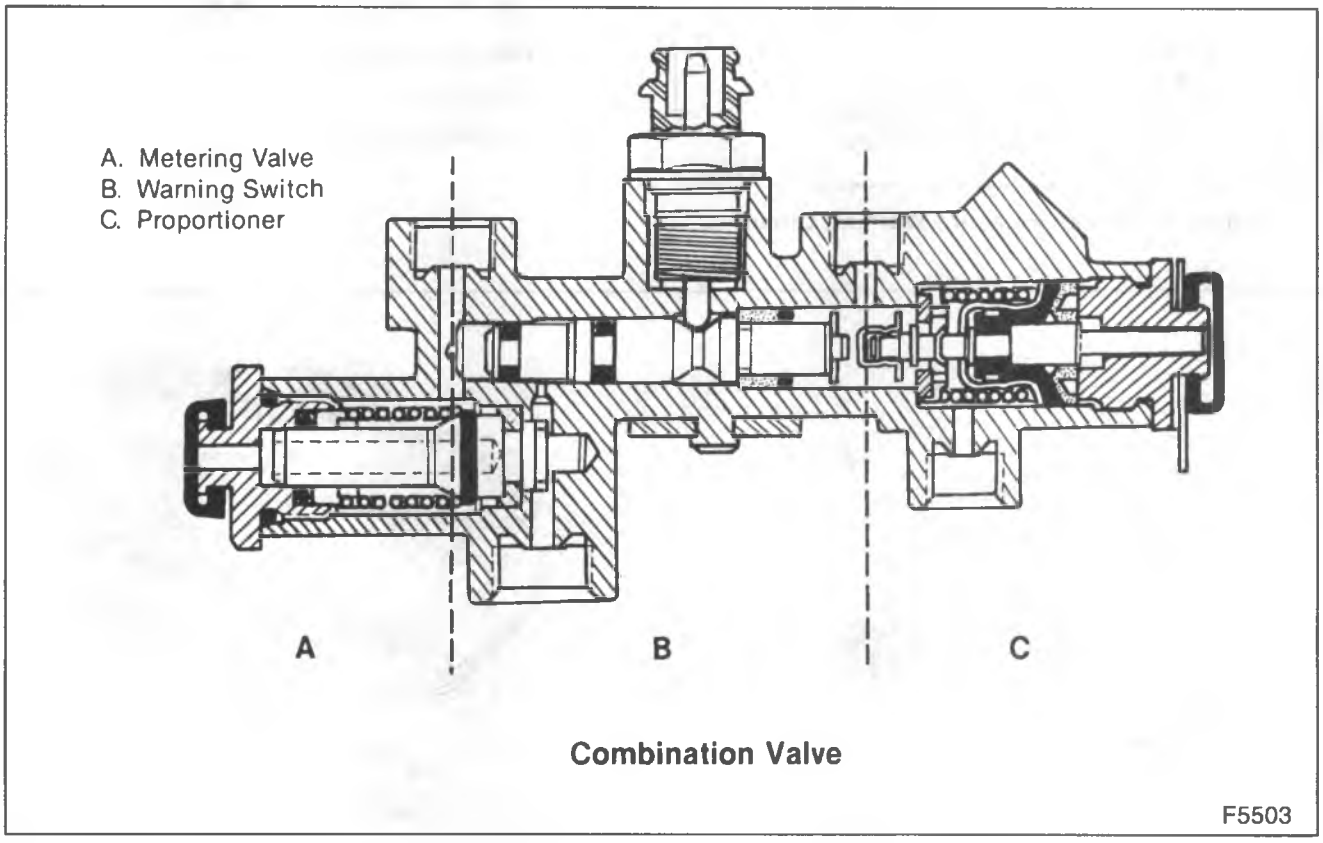

Figure 8 – Combination Valve – R/V 1 and 2 Models

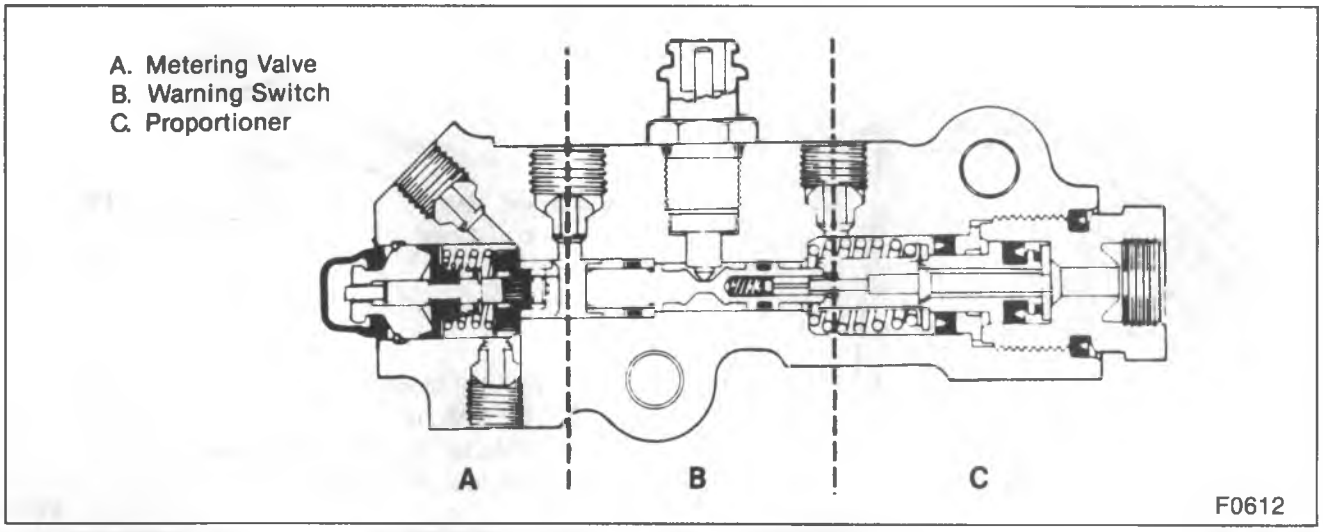

Figure 9 – Combination Valve – R/V 3 and P Models

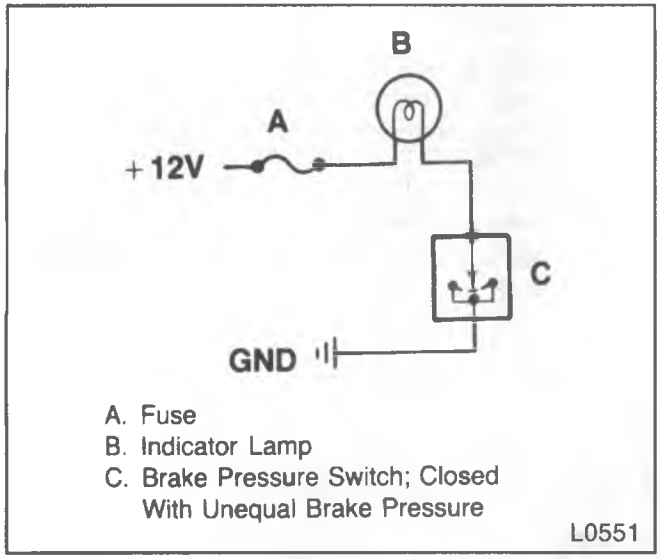

Figure 10—Brake Pressure Warning Circuit

VALVE REPLACEMENT

Remove or Disconnect (Figure 11)

- The combination valve is not repairable and must be replaced as a complete assembly.
- Care must be taken to prevent brake fluid from contacting any painted surface.

1. Hydraulic pipes.
   - Plug the pipes to prevent the loss of fluid from contacting any painted surface.
2. Warning switch harness.
3. Bolts or nuts.
4. Combination valve.

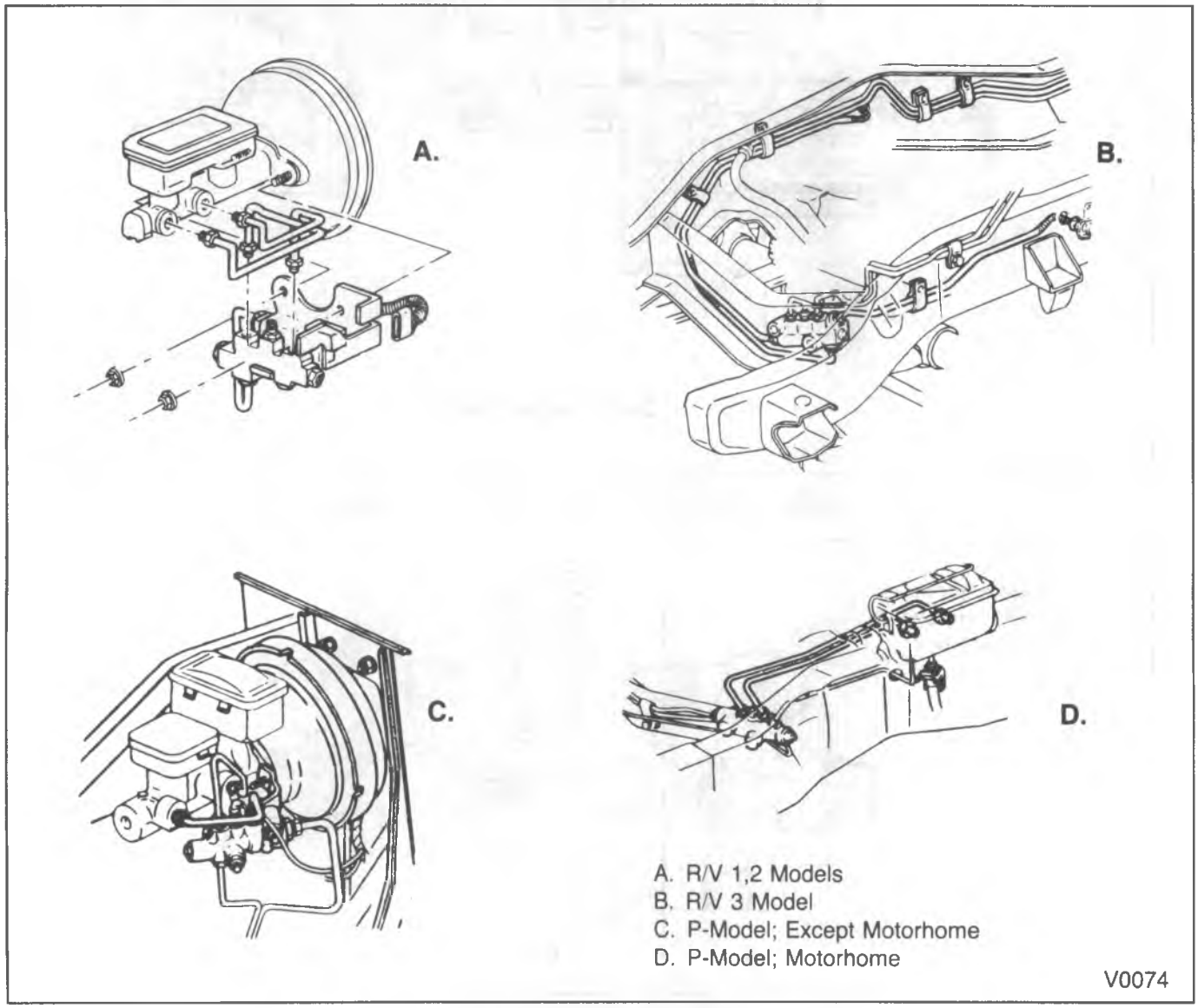

Figure 11—Combination Valve Locations

Install or Connect (Figure 11)

1. Combination valve.

NOTICE: See "Notice" on page 5A-1 of this section.

2. Bolts or nuts.

Tighten

- Bolts or nuts to "Specifications" at the end of this section.

4. Hydraulic pipes.
5. Bleed the brake system. Refer to "Bleeding Brake System" in this section.

HEIGHT-SENSING BRAKE PROPORTIONING VALVE

The height-sensing brake proportioning valve is used on series 30 R/V models (figures 12 and 13). This valve provides optimum brake balance and efficiency. The vehicle braking force is distributed to the front and rear wheels as determined by either a light or heavy payload condition.

The valve is mounted on the frame, and a linkage connects the valve to a bracket mounted on the axle.

CAUTION: Adding any suspension accessories or other equipment (such as load-leveling kits, air shocks, suspension lift kits, additional spring leaves, etc.), or making modifications that change the distance between the axle and the frame without changing the load will provide a false reading to the brake proportioning valve. This could result in unsatisfactory brake performance, which could result in an accident and personal injury.

VALVE REPLACEMENT

Remove or Disconnect (Figure 13)

- Raise the vehicle.
- Support the frame with suitable safety stands. The axle must be allowed to hang free.
- Clean the exterior of the valve to prevent dirt from contaminating the hydraulic system.

1. Brake pipes (51).
2. Nut from the shaft (48).
3. Lever (49).
4. Bolts (46) and washers (47).
5. Valve (50).

Install or Connect (Figure 13)

1. Position the valve on the mounting bracket.
2. Washers (47) and bolts (46).
3. Lever (49).
   - Refer to "Proportioning Valve Adjustment" in this section.

NOTICE: See "Notice" on page 5A-1 of this section.

4. Nut (48).

Tighten

- Nut (48) to 10 N•m (89 in. lbs.).

5. Brake pipes (51).
6. Bleed brakes. Refer to "Bleeding the Brake Hydraulic System" in this section.

- Lower the vehicle.
- Test the brakes.

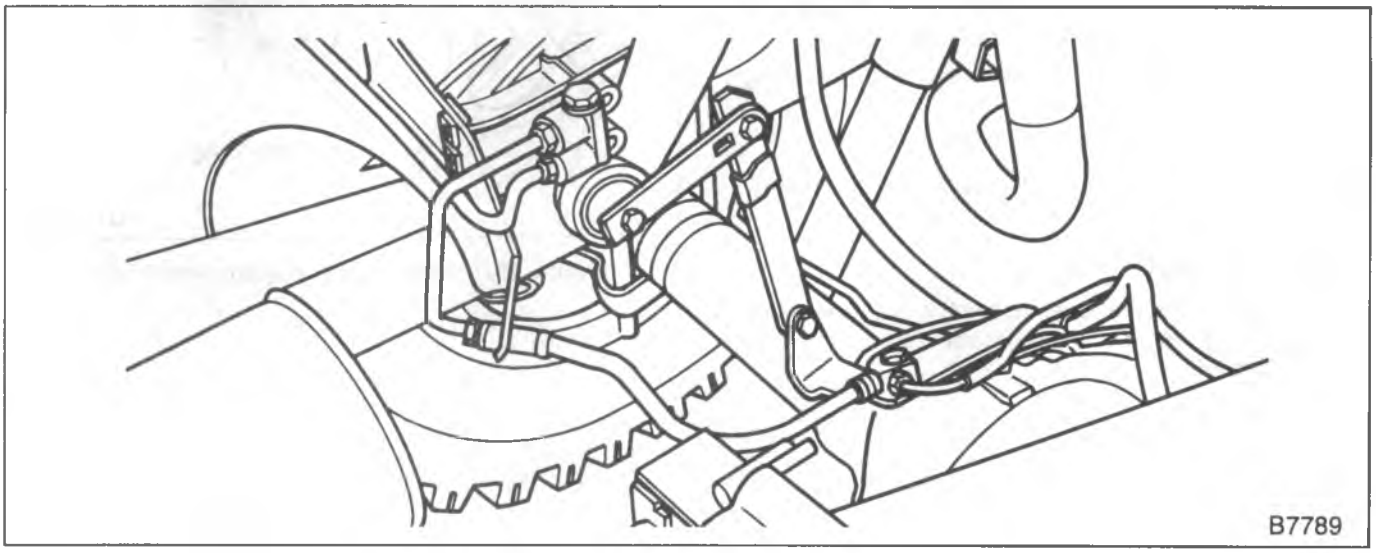

Figure 12—Height-Sensing Proportioning Valve

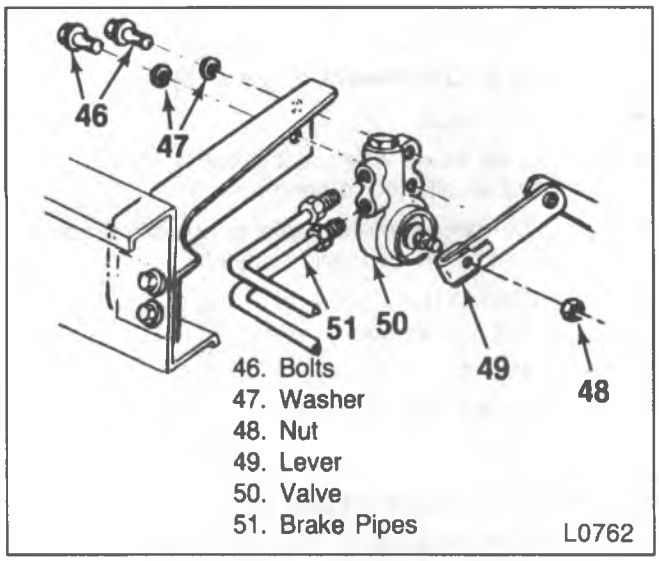

Figure 13 – Removing/Installing Proportioning Valve

PROPORTIONING VALVE ADJUSTMENT

If a front wheel lock-up is experienced when the vehicle is being operated near the maximum GVWR with a lower than desired brake application, the valve adjustment should be checked. Use the following procedure to check the adjustment.

1. Raise the vehicle.
   - Support the frame with suitable safety stands. The axle must be allowed to hang free.
2. Remove nut (48) from the valve shaft.
3. Remove lever (49).
4. Select the appropriate adjustment gage from the chart.
5. Rotate the valve shaft to permit the installation of the adjustment gage (figure 13).
   - The center hole of the adjustment gage must seat on the "D" shape of the valve shaft.
   - The gage tang must seat in the valve mounting hole.
6. Install lever (49).

NOTICE: See "Notice" on page 5A-1 of this section.

Important

- Do not drive the lever assembly onto the valve shaft by using nut or proper setting may be disturbed.

7. Install the nut (48) on the shaft.

Tighten

- Nut to 10 N•m (89 in. lbs.).

8. Sever the tang on the adjustment gage (figure 14).

- Lower the vehicle.
- Test the brakes.

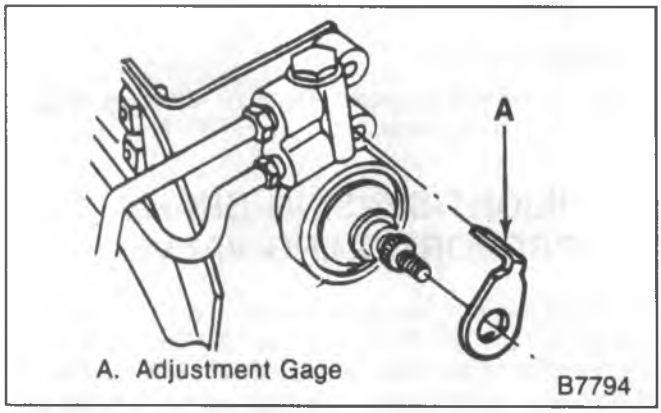

Figure 14 – Installing Adjustment Gage

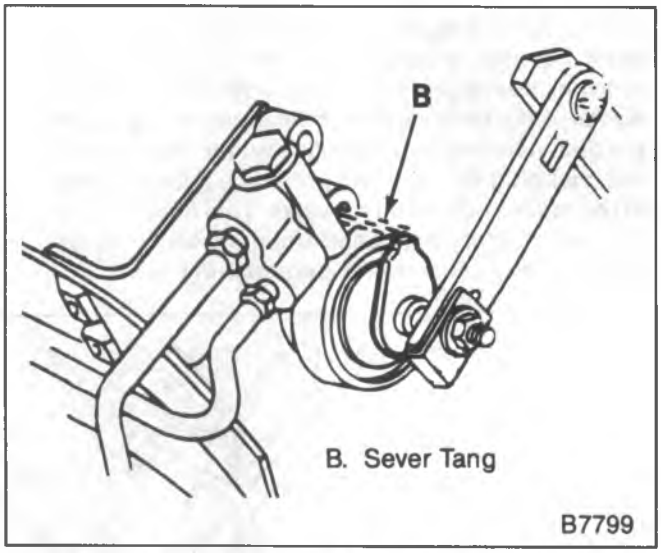

Figure 15 – Severing the Adjustment Tang

BRAKE PEDAL ASSEMBLY

CHECKING PEDAL TRAVEL

Tool Required:

J 28662 Brake Pedal Effort Gauge

At frequent intervals the brake pedal should be checked for travel. Travel is the distance the pedal moves toward the floor from a fully released position. This check should be made with the brakes cold and about 400 N (90 lbs.) of force on the pedal; J 28662 may be used to measure the force applied to the pedal. The pedal must be pumped at least three times with the engine off before making the check. To check the travel, use a yardstick to measure the distance from the pedal to the edge of the steering wheel with the pedal in the fully released position ("A," figure 16). With J 28662 in place on the pedal, push the pedal with a force of 400 N (90 lbs.) and measure the distance from the pedal to the steering wheel again ("B," figure 16). Subtract measurement A from B to obtain the pedal travel measurement. See the list below for the correct travel specifications.

R-V Power ..... 90 mm (3.5-inches)

P (Except JF9)..... 90 mm (3.5-inches)

P (With JF9) ..... 150 mm (6.0-inches)

BRAKE PEDAL REPLACEMENT

R/V AND P-MOTORHOME MODELS

Remove or Disconnect (Figures 17 and 18)

1. Retainer (6).
2. Washer (7).
3. Pin (10) and washer (9).
4. Brake Rod (8).
5. Return spring (5).
6. Nut (2) and bolt (1).
7. Brake pedal (12).
8. Clutch pedal (11) (if equipped).
9. Bushing (3).
10. Spacer (4).

Install or Connect (Figures 17 and 18)

1. Spacer (4).
2. Bushings (3).
3. Brake pedal (12).
4. Clutch pedal (11) (if equipped).

NOTICE: See "Notice" on page 5A-1 of this section.

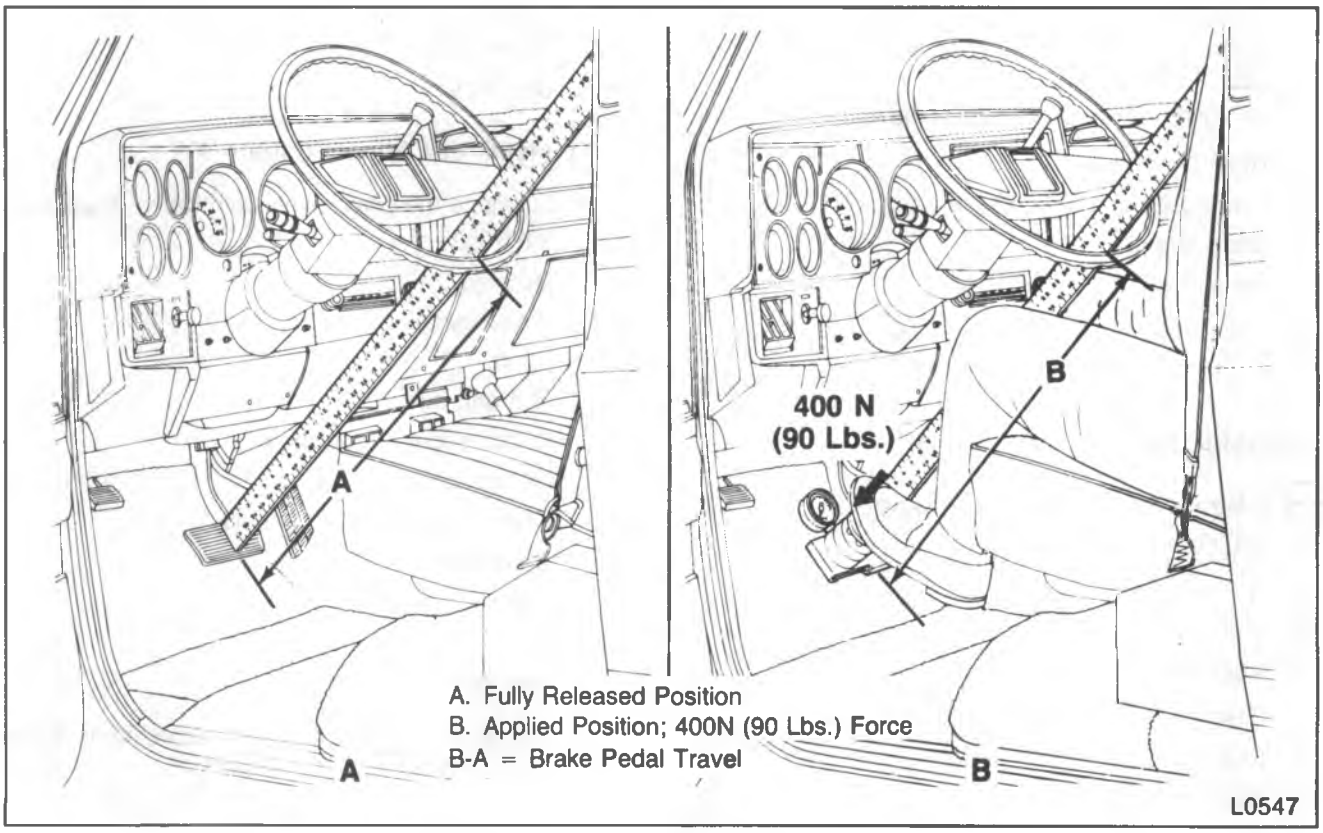

Figure 16—Checking Brake Pedal Travel

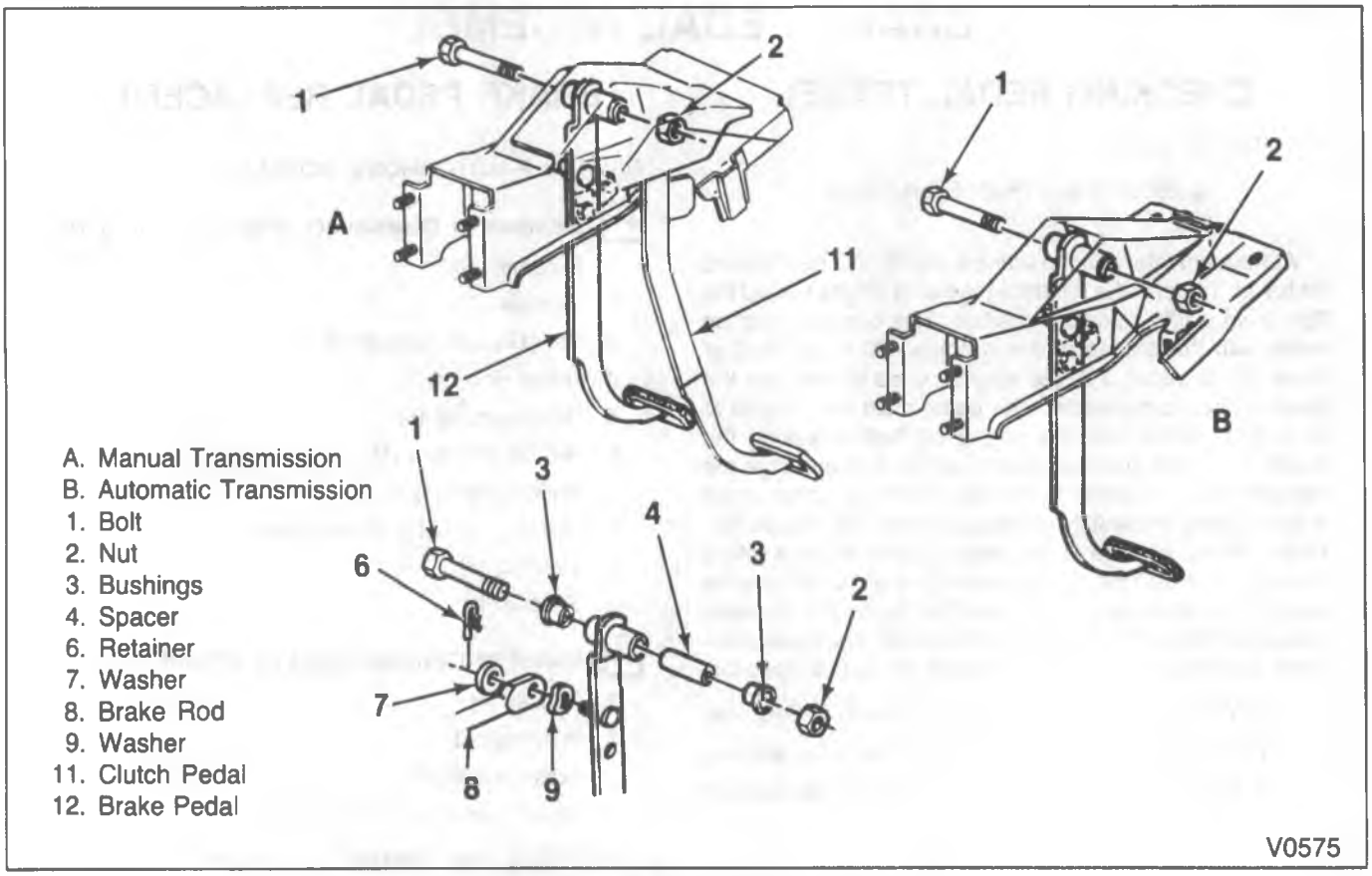

Figure 17 – R/V Brake Pedal Components

5. Bolt (1) and nut (2).

Tighten

- Nut (2) to "Specifications" at the end of this section.

6. Return spring (5).
7. Washer (9) and pin (10).
8. Brake Rod (8).
9. Washer (7) and retainer (6).

- Check the stoplamp switch adjustment. Refer to "Stoplamp Switch" in this section.

P MODELS; EXCEPT MOTORHOME

Remove or Disconnect (Figure 19)

1. Pin.
2. Nut.
3. Bolt.
4. Brake Rod.
5. Clutch attaching components (if equipped).
6. Clutch pedal (if equipped).
7. Return spring.
8. Nut and bolt.
9. Shaft.
10. Brake pedal.
11. Bushings.

Install or Connect (Figure 19)

- Lubricate the pivot points with Delco Brake Lube or equivalent.

1. Bushings.
2. Brake pedal.
3. Shaft.
4. Bolt and nut.
5. Clutch pedal (if equipped).
6. Return spring.
7. Clutch attaching components.
8. Brake Rod.
9. Bolt.
10. Nut.
11. New pin.

- Check the stoplamp switch adjustment. Refer to "Stoplamp Switch" in this section.

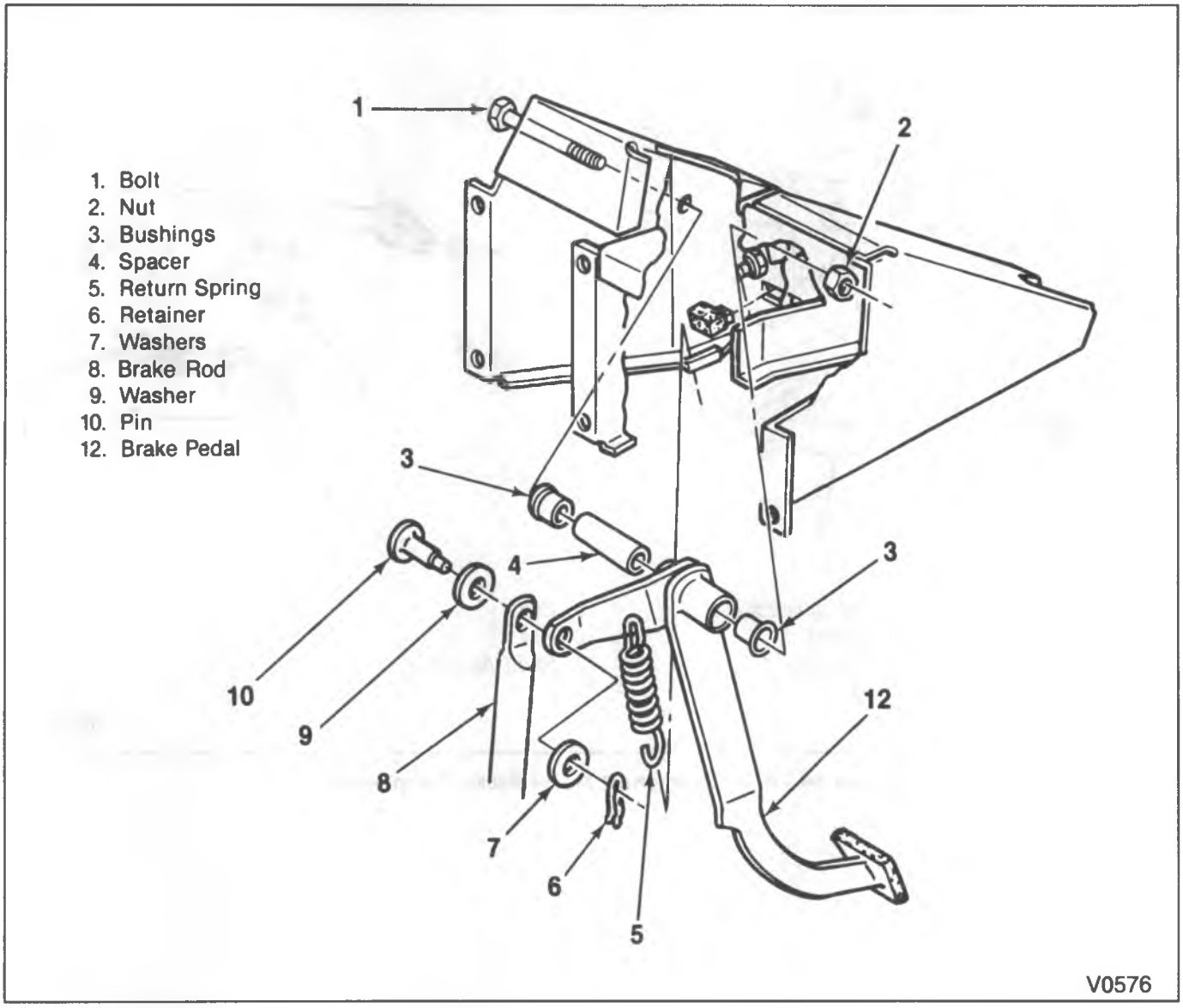

Figure 18—P-Motorhome Brake Pedal Components

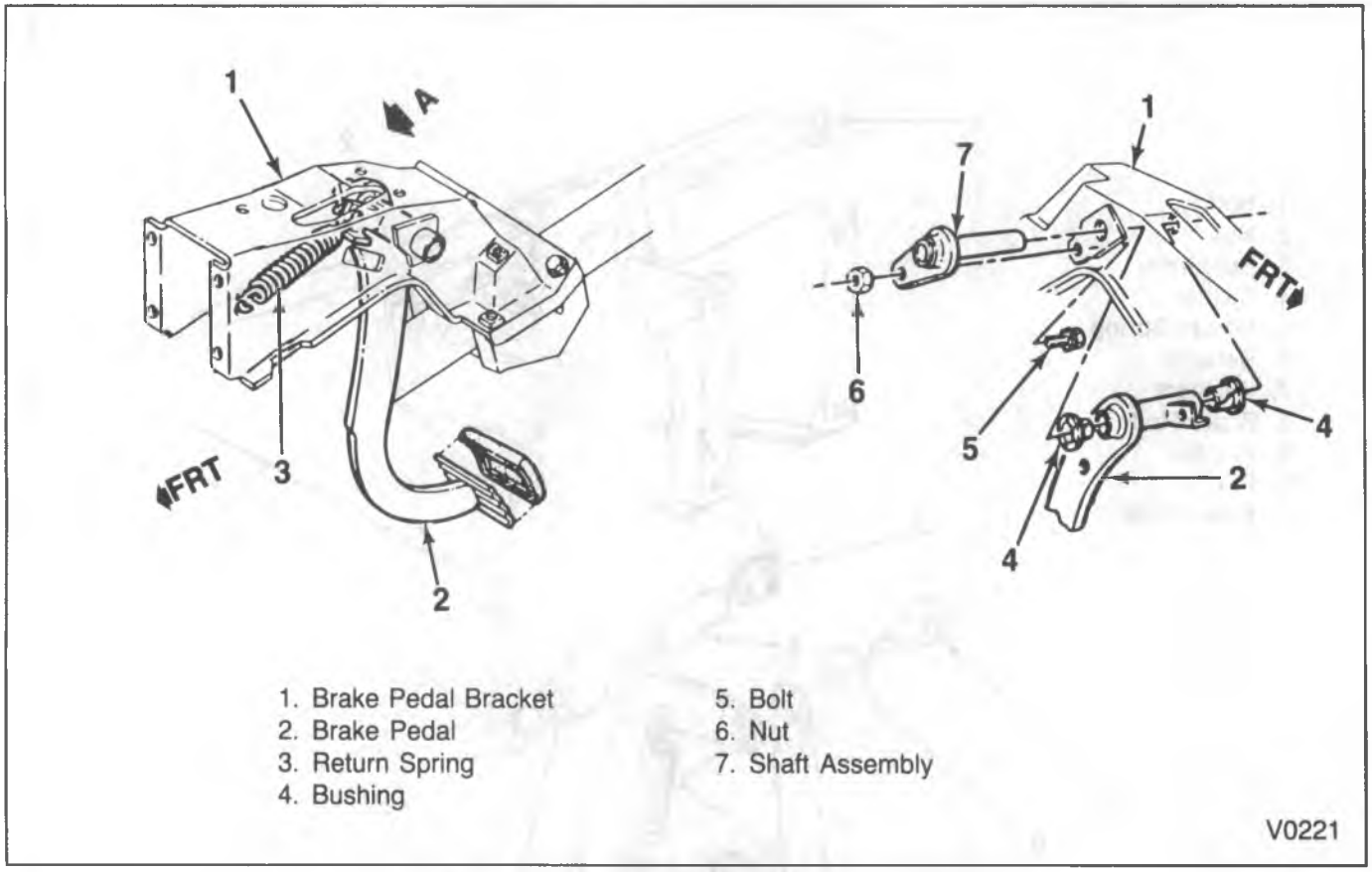

Figure 19—P — Commerical Model Brake Components

BRAKE PEDAL ROD REPLACEMENT

P-MOTORHOME MODEL

Remove or Disconnect (Figure 21)

1. Retainer (6).
2. Nut (16).
3. Bolt (17) and washers (7 and 9).
4. Screws (18).

- Raise the vehicle and support it with suitable safety stands.

5. Retainer (23).
6. Nut (22).
7. Bolt (19) and washers (20 and 21).
8. Brake rod (8).
9. Boot (24).

Install or Connect (Figure 21)

NOTICE: For steps 4 and 7 see "Notice" on page 5A-1 of this section.

1. Boot (24).

Adjust

- Brake rod to 790 mm (31.00-inches) from the centers of the bolt holes.

2. Brake rod (8).
3. Bolt (19) and washers (20 and 21).
4. Nut (22) and retainer (23).

Tighten

- Nut (22) to 34 N•m (25 ft. lbs.).

- Lower the vehicle.

5. Screws (18).
6. Bolt (17) and washers (9 and 17).
7. Nut (16) and retainer (6).

Tighten

- Nut (16) to 34 N•m (25 ft. lbs.).

STOPLAMP SWITCH

The design of the switch mounting provides for an automatic adjustment when the brake pedal is returned to its stop. There are two styles of switches. The determining factor is if the vehicle is equipped with cruise control. For electrical diagnosis of the stoplamp switch refer to LIGHTING SYSTEMS (SEC. 8B).

SWITCH REPLACEMENT

Remove or Disconnect (Figure 20)

1. Negative battery cable.
2. Electrical connectors.
3. Switch.

Install or Connect (Figure 20)

1. Switch.

Adjust

- Switch. Refer to "Switch Adjustment" in this section.

2. Electrical connectors.
3. Negative battery cable.

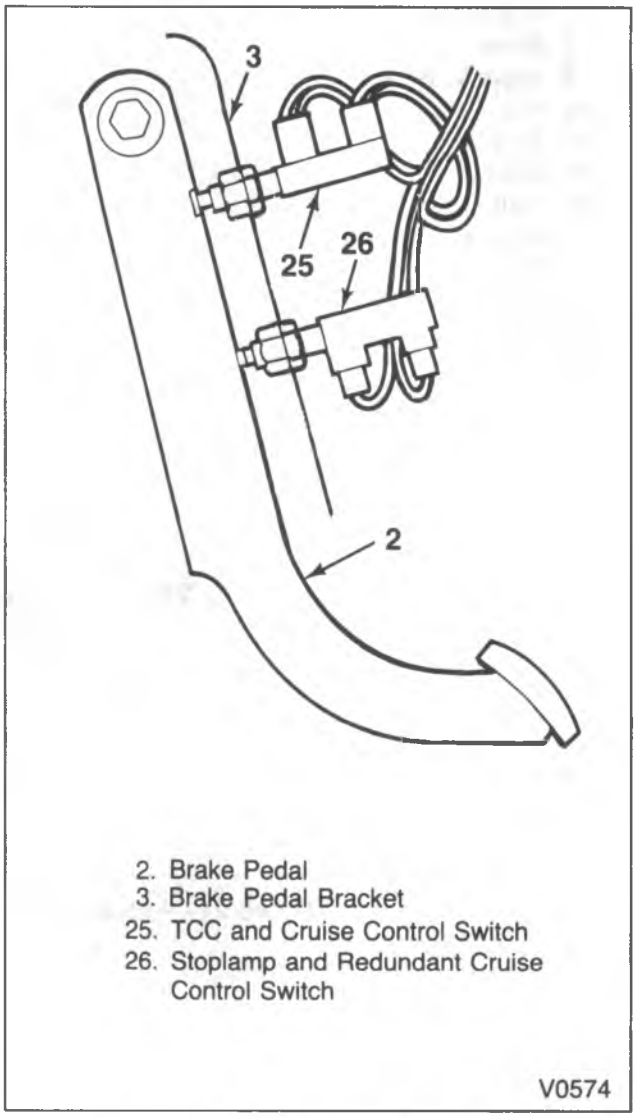

Figure 20—Stoplamp Switch

SWITCH ADJUSTMENT

1. Depress the brake pedal and press the switch in until it is firmly seated in the clip.
   - "Clicks" can be heard as the threaded portion of the switch is pushed through the clip.
2. Pull the brake pedal against the pedal stop until the "click" can no longer be heard.
3. Electrical contact should be made when the brake pedal is depressed the specified distance.

   25-31 mm (1.0-1.24 inches) (R/V Models).

   11-24 mm (0.45-0.95 inches) (P Models).

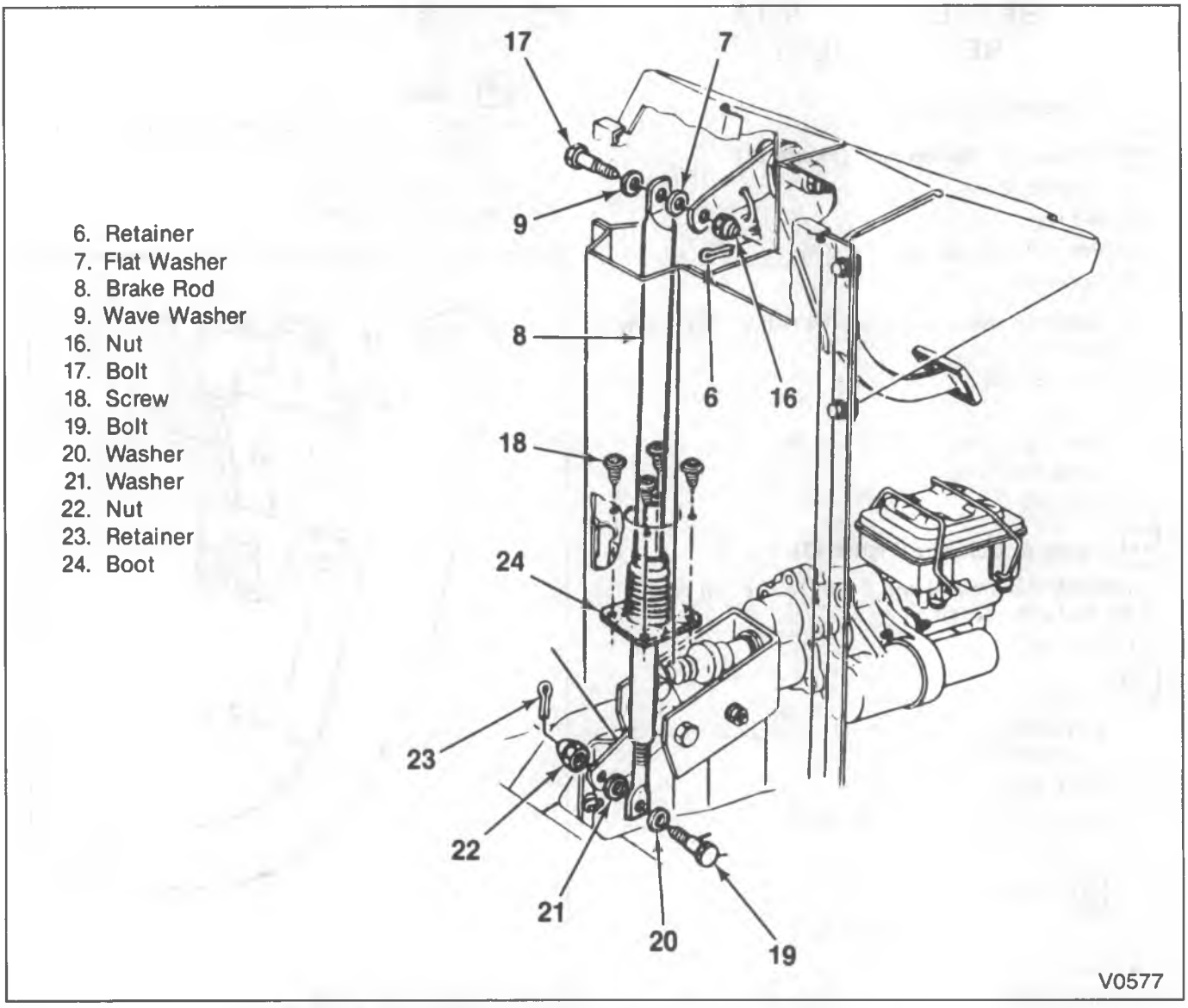

Figure 21—P-Motorhome Brake Pedal Rod Components

MASTER CYLINDERS

DESCRIPTION

There are two designs of master cylinders available depending on the brake option.

One is a full cast-iron design incorporating a conventional front to rear brake split (figure 22). The primary piston provides the fluid pressure to the front brakes, while the secondary piston provides the fluid pressure to the rear brakes. If the pressure is lost from either system, the remaining system will function to stop the vehicle.

The second style master cylinder is designed for use with a system using the low-drag calipers (figure 23). In addition to the standard master cylinder functions, a quick take-up feature is included. This provides a large volume of fluid to the wheels at low pressure with the initial brake application. This large volume of fluid is needed to overcome the clearance created by the seal retracting the pistons into the front calipers and the spring retraction of the rear drum brake shoes.

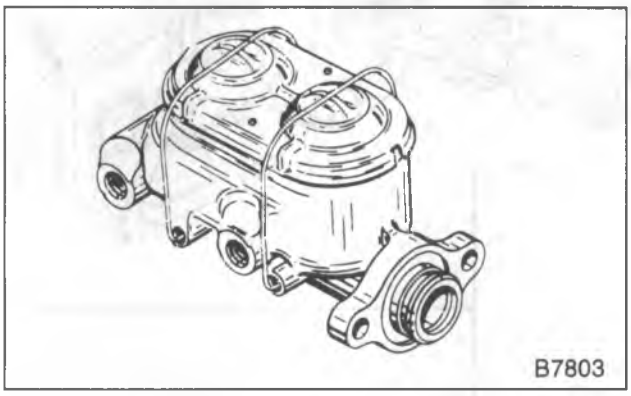

Figure 22 – Cast-Iron Master Cylinder

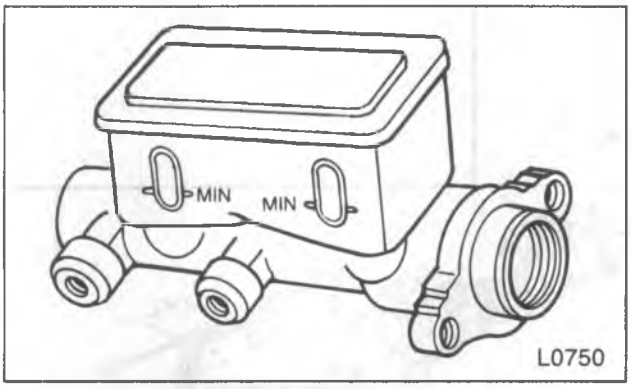

Figure 23 – Composite Master Cylinder

MASTER CYLINDER REPLACEMENT

Remove or Disconnect (Figure 24)

- Apply the parking brake.

1. Brake pipes.
   - Cover the ends of the pipes to prevent dirt from entering the system.
2. Mounting nuts.
3. Position combination valve bracket aside.
4. Master cylinder.
   - If the vehicle is equipped with manual brakes, refer to "Brake Pedal Replacement" in this section for the removal of the pushrod from the pedal.

Install or Connect (Figure 24)

- Prior to installation, bleed the master cylinder. Refer to "Bench Bleeding" in this section.

1. Master cylinder.
   - If the vehicle is equipped with manual brakes, refer to "Brake Pedal Replacement" in this section for the installation of the pushrod to the pedal.

NOTICE: See "Notice" on page 5A-1 of this section.

2. Position combination valve bracket on mounting studs.
3. Mounting nuts.

   Tighten

   - Nuts to 27 N•m (20 ft. lbs.).
4. Brake pipes.
5. Bleed the brakes. Refer to "Bleeding the Brake Hydraulic System" in this section.

- Release the parking brake.

BENCH BLEEDING

The purpose of bench bleeding is to remove the air from the master cylinder so that when it is installed on the vehicle, the brake system bleeding time will be reduced.

1. Plug the outlet ports and mount the master cylinder in a vise with the front end tilted slightly down.
2. Fill the reservoir with clean brake fluid.
   Using a tool with a smooth rounded end, stroke the primary piston about 25 mm (1-inch) several times. As air is bled from the master cylinder, with the outlets plugged, the resistance to the primary piston travel will not allow the full 25 mm (1-inch) stroke.
3. Reposition the master cylinder in the vise with the front end of the master cylinder tilted slightly up. Again stroke the primary piston about 25 mm (1-inch) several times.
4. Reposition the master cylinder in the vise to the level position. Loosen the plugs one at a time and push the piston into the bore to force the air from the cylinder. To prevent air from being sucked back into the cylinder, tighten the plug(s) before allowing the piston to return to its original position.
5. Fill the reservoir. Normal bleeding procedures should be followed after the master cylinder is installed. Refer to "Bleeding the Brake Hydraulic System" in this section.

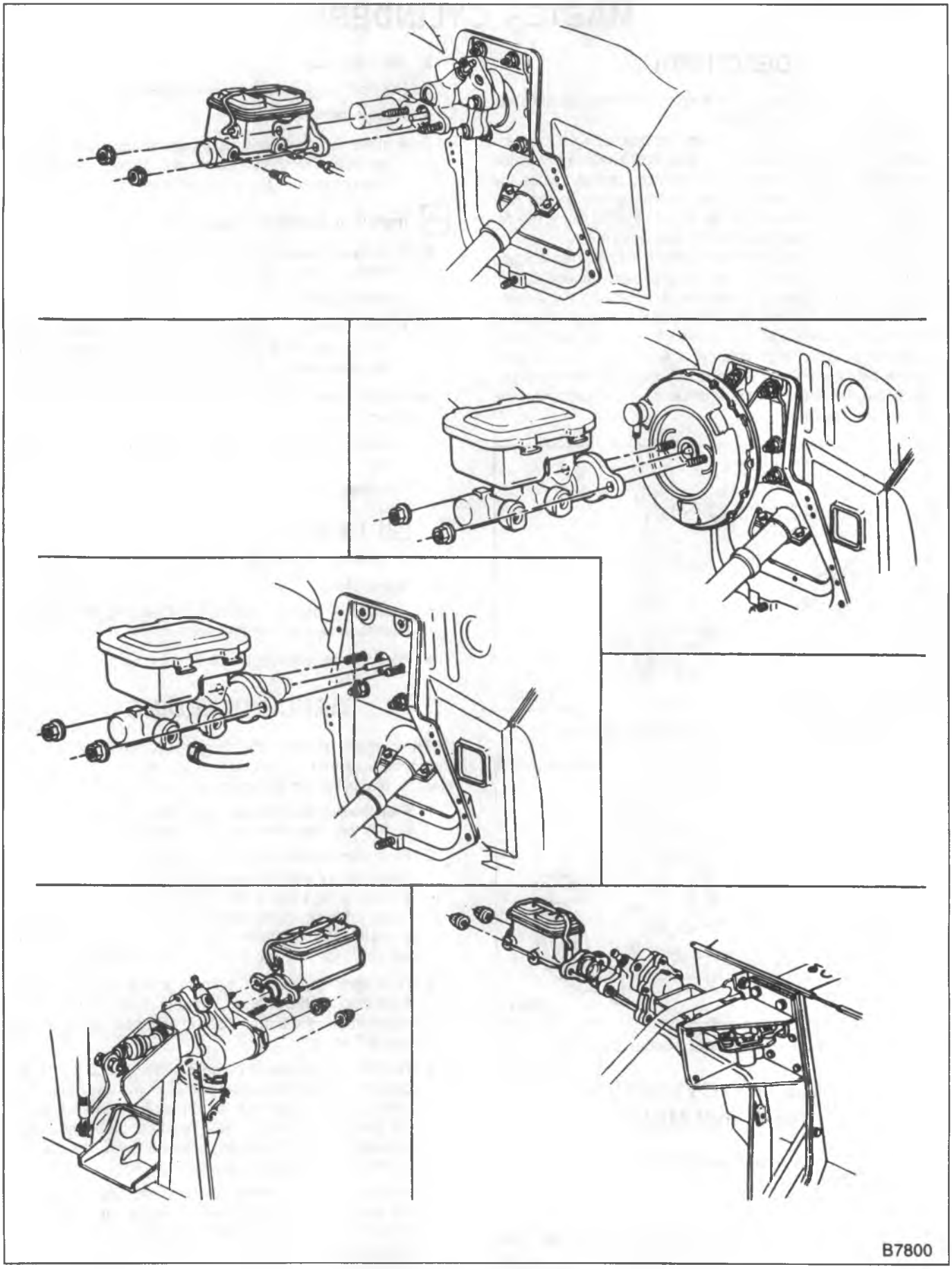

Figure 24 – Master Cylinder Installations

SPECIFICATIONS

BRAKE SYSTEMS

System	Front Brakes	Rear Brakes	Brake Assist
GASOLINE ENGINE VEHICLES			
JB5 Low Drag	Disc 11.86x1.29	Drum 11.15x2.75	Vacuum—Dual Diaphragm
JB6 Low Drag	Disc 12.50x1.28	Drum 11.15x2.75	Vacuum—Dual Diaphragm
JB7 Conventional	Disc 12.50x1.28	Drum 13.00x2.50	Vacuum—Dual Diaphragm
JB8 Conventional	Disc 12.50x1.54	Drum 13.00x3.50	Hyraulic—Hydro-Boost
JB9 Conventional	Disc 14.25x1.54	Disc 13.75x1.54	Hyraulic—Hydro-Boost
DIESEL ENGINE VEHICLES			
JD3 Low Drag	Disc 11.86x1.29	Drum 11.00x2.00	Hyraulic—Hydro-Boost
JD5 Low Drag	Disc 11.86x1.29	Drum 11.15x2.75	Hyraulic—Hydro-Boost
JD6 Conventional	Disc 12.50x1.28	Drum 11.15x2.75	Hyraulic—Hydro-Boost
JD7 Conventional	Disc 12.50x1.28	Drum 13.00x2.50	Hyraulic—Hydro-Boost

TB-3063-2A

FASTENER TORQUE

Description		R	V	P
Master Cylinder	—to Dash or Booster	27 N•m (20 ft. lbs.)	27 N•m (20 ft. lbs.)	27 N•m (20 ft. lbs.)
Combination Valve	—Mounting Bolts	17 N•m (150 in. lbs.)	17 N•m (150 in. lbs.)	25 N•m (18 ft. lbs.)
	—Bracket	—	—	34 N•m (25 ft. lbs.)
Brake Pedal	—Bracket to Dash	34 N•m (25 ft. lbs.)	34 N•m (25 ft. lbs.)	34 N•m (25 ft. lbs.)
	—Bracket to I.P.	34 N•m (25 ft. lbs.)	34 N•m (25 ft. lbs.)	—
	—Pivot Bolt Nut	34 N•m (25 ft. lbs.)	34 N•m (25 ft. lbs.)	63 N•m (46 ft. lbs.)
	—Sleeve to Bracket	—	—	10 N•m (89 in. lbs.)
	—Stoplamp Switch Bracket	34 N•m (25 ft. lbs.)	34 N•m (25 ft. lbs.)	—
	—Push Rod to Pedal	—	—	34 N•m (25 ft. lbs.)
	—Push Rod Adjusting Nut	—	—	30 N•m (22 ft. lbs.)
Parking Brake	—to Dash	12 N•m (100 in. lbs.)	12 N•m (100 in. lbs.)	—
	—to I.P. Kick Panel or Floorpan	17 N•m (150 in. lbs.)	17 N•m (150 in. lbs.)	25 N•m (18 ft. lbs.)
	—Cabled Clips —Screws	17 N•m (150 in. lbs.)	—	17 N•m (150 in. lbs.)
	—Bolts	17 N•m (150 in. lbs.)	—	6 N•m (55 in. lbs.)
Front Brake Hose	—to Caliper	44 N•m (32 ft. lbs.)		
	—to Frame Nut	7 N•m (58 in. lbs.)		
	—Bracket Bolt	17 N•m (150 in. lbs.)	—	17 N•m (150 in. lbs.)
Rear Brake Hose	—to Axle Bracket	17 N•m (150 in. lbs.)	17 N•m (150 in. lbs.)	17 N•m (150 in. lbs.)
	—Bracket to Axle	27 N•m (20 ft. lbs.)	27 N•m (20 ft. lbs.)	17 N•m (150 in. lbs.)
Brake Line	—Attaching Nuts	17 N•m (150 in. lbs.)		
	—Retaining Clips —Screws	17 N•m (150 in. lbs.)	17 N•m (150 in. lbs.)	17 N•m (150 in. lbs.)
	—Bolts	—	—	24 N•m (18 ft. lbs.)

GMTB-3054-2A

SPECIFICATIONS (CONT.)

PARTS INFORMATION

Part Name	Group
Master Cylinder	4.650
MC Repair Kit	4.649
Combination Valve	4.690
Brake Pedal Pad Cover	4.630
Stoplamp Switch	2.447

GMTB-4112-2A

SPECIAL TOOLS

1.

J 29567

2.

J 23518-01

3.

J 23709

4. 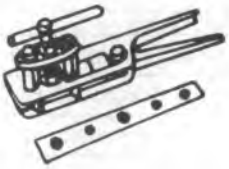

J 23530

5.

J 28662

1. Brake Bleeder Adapter
2. Brake Bleeder Adapter
3. Combination Valve Depressor
4. Flaring Tool
5. Brake Pedal Effort Gauge

V0080

SECTION 5A1

HYDRAULIC BRAKE BOOSTER SYSTEMS

***NOTICE:** When fasteners are removed, always reinstall them at the same location from which they were removed. If a fastener needs to be replaced, use the correct part number fastener for that application. If the correct part number fastener is not available, a fastener of equal size and strength (or stronger) may be used. Fasteners that are not reused, and those requiring thread locking compound will be called out. The correct torque value must be used when installing fasteners that require it. If the above conditions are not followed, parts or system damage could result.*

CONTENTS

SUBJECT	PAGE
Vacuum Booster Description	5A1-1
Diagnosis of Vacuum Booster	5A1-2
Hydro-Boost System Description	5A1-3
Diagnosis of Hydro-Boost System	5A1-3
Hydro-Boost System Tests	5A1-3
Vacuum Boosters On-Vehicle Service	5A1-5
Vacuum Booster Replacement	5A1-5
Hydraulic Brake Booster (Hydro-Boost) On-Vehicle Service	5A1-5
Hydro-Boost Replacement	5A1-5
Bleeding the Hydro-Boost System	5A1-8
Specifications	5A1-9
Fastener Torque	5A1-9

VACUUM BOOSTER DESCRIPTION

SINGLE DIAPHRAGM MODEL

This booster is a single-diaghragm, vacuum-suspended unit. It may have a single-function vacuum switch to activate the brake warning light in case of low booster vacuum or vacuum pump malfunction. In a normal operating mode, with the service brakes in the released position, a vacuum-suspended booster operates with vacuum on both sides of its diaphragm. When the brakes are applied, air at atmospheric pressure is admitted to one side of the diaphragm to provide the power assist.

TANDEM DIAPHRAGM MODEL

This booster is a tandem-diaphragm, vacuum-suspended unit. It may have a single dual-function vacuum switch to activate the brake warning light in case of low booster vacuum or vacuum pump malfunction. In a normal operating mode, with the service brakes in the released position, a tandem-diaphragm, vacuum-suspended booster operates with vacuum on both sides of its diaphragms. When the brakes are applied, air at atmospheric pressure is admitted to one side of each diaphragm to provide the power assist.

DIAGNOSIS OF VACUUM BOOSTER

PROBLEM	POSSIBLE CAUSE	CORRECTION
Hard Pedal	1. Broken or damaged hydraulic brake lines.	1. Inspect and replace as necessary.
	2. Faulty vacuum check valve or grommet.	2. Replace.
	3. Collapsed or damaged vacuum hose.	3. Replace hose.
	4. Plugged or loose vacuum fitting.	4. Clean or tighten.
	5. Faulty air valve seal or support plate.	5. Replace. Refer to the Light Duty Truck Unit Repair Manual.
	6. Damaged floating control valve.	6. Replace. Refer to the Light Duty Truck Unit Repair Manual.
	7. Bad stud welds on front or rear housing or power head.	7. Replace unless easily repaired.
	8. Faulty booster diaphragm.	8. Replace. Refer to the Light Duty Truck Unit Repair Manual.
	9. Restricted air filter element.	9. Replace.
	10. Worn or distorted reaction plate or levers.	10. Replace plate or levers. Refer to the Light Duty Truck Unit Repair Manual.
	11. Cracked or broken power pistons or retainer.	11. Replace power pistons and piston rod retainer. Refer to the Light Duty Truck Unit Repair Manual.

GMTB-4400-A

PROBLEM	POSSIBLE CAUSE	CORRECTION
Grabby Brakes (Apparent Off-On Condition)	1. Broken or damaged hydraulic brake lines.	1. Inspect and replace as necessary.
	2. Low fluid level in the master cylinder.	2. Fill reservoirs with proper brake fluid. Check for leaks.
	3. Faulty master cylinder seals.	3. Repair or replace as necessary.
	4. Cracked master cylinder casting.	4. Replace.
	5. Leaks in front calipers or rear wheel cylinders or in pipes or connections.	5. Inspect and repair as necessary.
	6. Air in hydraulic system.	6. Bleed system.
Brakes Fail to Release	1. Blocked passage in power piston.	1. Inspect and repair or replace as necessary. Refer to the Light Duty Truck Unit Repair Manual.
	2. Air valve sticking shut.	2. Check for proper lubrication of air valve O-ring seal. Refer to the Light Duty Truck Unit Repair Manual.
	3. Broken piston return spring or air valve spring.	3. Replace. Refer to the Light Duty Truck Unit Repair Manual.
	4. Tight brake pedal linkage.	4. Repair or replace as necessary.

GMTB-4401-A

HYDRO-BOOST SYSTEM DESCRIPTION

This system uses a hydraulic pump to power the system and a pneumatic accumulator as a reserve system.

In this system, no special fluids are used, however, care must be taken to use the correct fluids. The master cylinder and brake system operate on standard hydraulic brake fluid, while the hydraulic pump operates on power steering fluid. For diagnosis of the Hydro-Boost System, refer to "Hydro-Boost Systems Tests" and "Diagnosis of Hydro-Boost System" in this section.

DIAGNOSIS OF HYDRO-BOOST SYSTEM

PROBLEM	POSSIBLE CAUSE	CORRECTION
Slow Brake Pedal Return	1. Excessive seal friction in booster. 2. Faulty spool action. 3. Restriction in return line from booster to pump reservoir. 4. Damaged input rod end.	1. Overhaul with new seal kit. 2. Flush steering system while pumping brake pedal. 3. Replace line. 4. Replace input rod and piston assembly.
Grabby Brakes OR Booster Chatters — Pedal Vibrates	1. Faulty spool action caused by contamination in system. 2. Power steering pump belt slips. 3. Low fluid level in power steering pump. 4. Faulty spool operation caused by contamination in system.	1. Flush steering system while pumping brake pedal. 2. Tighten belt. 3. Fill reservoir and check for external leaks. 4. Flush steering system while pumping brake pedal.
Accumulator Leak-Down System Does Not Hold Charge	1. Contamination in steering hydro-boost system. 2. Internal leakage in accumulator system.	1. Flush steering system while pumping brake pedal. 2. Overhaul unit using accumulator rebuild kit and seal kit.

GMTB-0860-2L

HYDRO-BOOST SYSTEM TESTS

The Hydro-Boost system receives its source of power from the power steering system. Therefore, a malfunctioning power steering system may affect the operation of the booster, just as a problem in the booster may affect the steering system. Prior to performing any tests, the following checks must be made.

1. Check all the power steering and brake pipe connections for leaks or restrictions.

NOTICE: Power steering fluid and brake fluid cannot be mixed. If brake seals contact steering fluid or steering seals contact brake fluid, seal damage will result.

2. Check and fill the brake master cylinder with brake fluid.
3. Check and fill the power steering reservoir with power steering fluid. If fluid contains air refer to POWER STEERING (SEC. 3B1) for further diagnosis.
4. Check power steering pump belt for wear and tension. Adjust if needed. Refer to POWER STEERING (SEC. 3B1).
   - Tensioning of the serpentine single-belt accessory drive system is not needed. The system maintains proper tension automatically.
5. Check engine idle speed. Refer to the vehicle's Emission Control Information label for idle specifications.
6. Check steering pump pressure. Refer to POWER STEERING (SEC. 3B1).

NOISE DIAGNOSIS

The following noises are associated with the Hydro-Boost and may or may not be cause for customer complaint. Some noises are normal and for the most part temporary in nature. Other noises may be a sign of excessive wear or the presence of air in either the booster or the steering system.

1. A moan or low frequency hum usually accompanied by a vibration in the pedal or steering column may be observed during parking maneuvers or other low speed maneuvers. This may be caused by a low fluid level in the power steering pump or by air in the fluid. Holding the pump at relief pressure (steering wheel held all the way in one direction) for more than five seconds will cause air to enter the system. Check the fluid level and fill if needed. The system must then sit for one hour to remove the air. If the condition persists, refer to POWER STEERING (SEC. 3B1).
2. A high speed fluid noise may be heard when the brake pedal is fully depressed. This condition is normal.

3. Whenever the accumulator pressure is used, a slight hiss may be noticed. It is the sound of the hydraulic fluid escaping through the accumulator valve, and is completely normal.
4. After the accumulator has been emptied and the engine is started again, another hissing sound may be heard during the first brake application or the first steering maneuver. This is caused by the fluid rushing through the accumulator charging orifice. It is normal and will only be heard once after the accumulator is emptied. However, if this sound continues, even though no apparent accumulator pressure assist was made, it could be an indication that the accumulator is not holding pressure and should be checked using the procedure "Accumulator Leakdown Test" in this section.

BOOSTER FUNCTIONAL TEST

With the engine off, apply the brake pedal several times until the accumulator is completely depleted. Depress the brake pedal using 180 N (40 lbs.) of force and start the engine. The pedal will fall and then push back against your foot.

ACCUMULATOR LEAKDOWN TEST

1. Start the engine and charge the accumulator by applying the brake pedal or by turning the steering wheel from stop to stop. Turn off the engine and let the vehicle sit for one hour. After one hour there should be at least two power-assisted applications with the engine off.
2. If the reserve system will not retain a charge for one hour, but functions normally immediately following charging, the accumulator valves are at fault. The booster must be disassembled and the accumulator valves replaced.
3. If the accumulator can be heard charging and discharging but does not hold a charge, disassemble the booster and replace the accumulator valves.
4. Deplete the accumulator by pressing the brake pedal several times. If the accumulator can has lost its gas charge, it is possible to rotate or wobble the accumulator can with respect to the housing. Replace the accumulator assembly.

SEAL LEAK DIAGNOSIS (Figure 1)

A. **INPUT ROD SEAL.** A damaged seal will show up as a fluid leak from the mounting bracket vent hole. The booster must be removed from the vehicle and disassembled. The input rod bore should be checked for any scratches that may be the cause of the leak. If scratches are present, the housing cover must be replaced. If no excessive scratches are present, then the booster seal kit can be used to replace the appropriate seals.

B. **POWER PISTON SEAL.** Power piston seal damage will be noticed by fluid leaking out at the common master cylinder brake booster vent, and possibly, as a reduction in power assist. The booster must be removed from the vehicle and disassembled. The piston should be checked for any scratches that may be the cause of the leak. If no scratches are present, the booster seal kit can be used to replace the appropriate seals.

C. **HOUSING SEAL.** If the housing seal is damaged, fluid will leak out between the two housings. The booster must be removed from the vehicle and disassembled. The booster seal kit should be used to replace the housing, input rod and power piston seals.

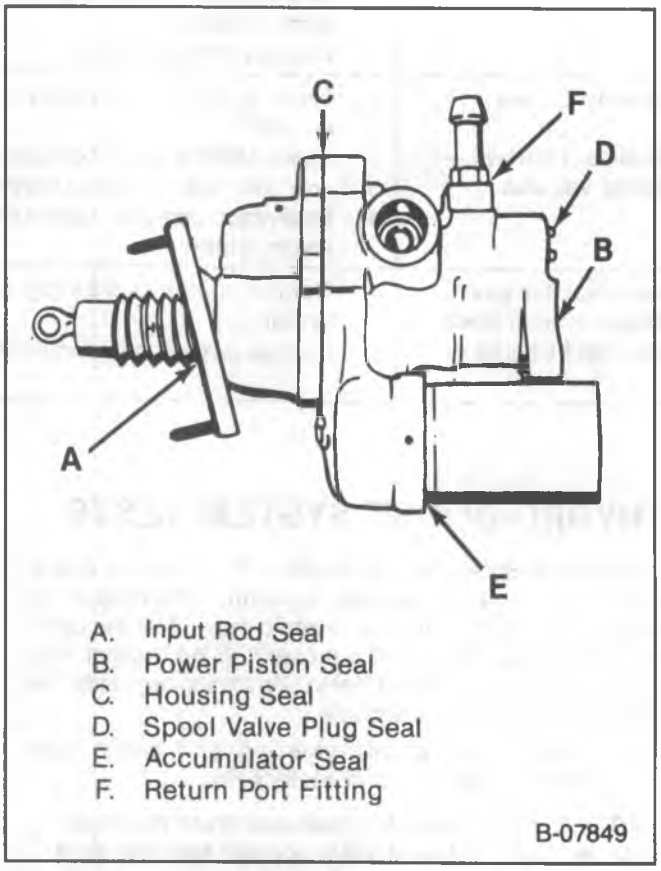

Figure 1—Hydro-Boost Seal Leak Diagnosis

D. **SPOOL VALVE PLUG SEAL.** Damage to this seal will be noticed by fluid leaking out past the plug. The booster need not be removed from the vehicle for seal replacement.

E. **ACCUMULATOR SEAL.** Damage to this seal will result in fluid leakage past the accumulator cap. The seal can be replaced while the booster is installed on the vehicle.

F. **RETURN PORT FITTING.** Tighten the fitting to 10 N•m (7 ft. lbs.). If the leak continues, replace the seal ring under the fitting.

VACUUM BOOSTERS ON-VEHICLE SERVICE

VACUUM BOOSTER REPLACEMENT

Remove or Disconnect (Figure 2)

- Apply the parking brake.

1. Mounting nuts (1).
2. Master cylinder (2).
   - Support the master cylinder.
3. Vacuum hose from the check valve.
4. Booster pushrod (5). Refer to HYDRAULIC BRAKES (SEC. 5A).
5. Booster mounting nuts (4).
   - The mounting nuts must be removed from inside the vehicle.
6. Vacuum booster (3).

Install or Connect (Figure 2)

NOTICE: For steps 2 and 6 see "Notice" on page 5A1-1 of this section.

1. Vacuum booster (3).
2. Booster mounting nuts (4).

   Tighten
   - Nuts to "Specifications" at the end of this section.
3. Booster pushrod (5). Refer to HYDRAULIC BRAKES (SEC. 5A).
4. Vacuum hose.
5. Master cylinder (2).
6. Mounting nuts (1).

   Tighten
   - Mounting nuts to "Specifications" at the end of this section.
7. Release the parking brakes.

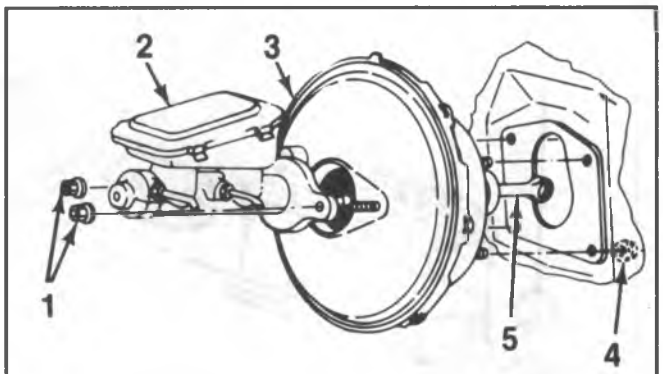

1. Mounting Nuts
2. Master Cylinder
3. Vacuum Booster
4. Booster Mounting Nuts
5. Booster Pushrod

B-07805

Figure 2—Removing/Installing Vacuum Boosters

HYDRAULIC BRAKE BOOSTER (HYDRO-BOOST) ON-VEHICLE SERVICE

HYDRO-BOOST REPLACEMENT

Remove or Disconnect (Figure 3)

- Apply the parking brake.

1. Hydraulic lines from the booster.
2. Nuts (1).
3. Master cylinder (2).
   - Support the master cylinder.
4. Booster pushrod. Refer to HYDRAULIC BRAKES (SEC. 5A).
5. Nuts (4) and (6).
6. Hydro-Boost unit (3).
7. Gasket (5).

Install or Connect (Figure 3)

NOTICE: For steps 3 and 6 see "Notice" on page 5A1-1 of this section.

1. Gasket (5).
2. Hydro-Boost unit (3).
3. Nuts (4) and (6).

   Tighten
   - Nuts to "Specifications" at the end of this section.
4. Booster pushrod. Refer to HYDRAULIC BRAKES (SEC. 5A).
5. Master cylinder (2).
6. Nuts (1).

   Tighten
   - Nuts to "Specifications" at the end of this section.
7. Hydraulic lines.

- Bleed the booster. Refer to "Bleeding the Hydro-Boost System" in this section.

P3 MODELS; EXCEPT MOTORHOME

Remove or Disconnect (Figures 4 and 5)

- Apply the parking brake.

1. Hydraulic lines from the booster.
2. Nuts (1) and washers (7).
3. Master cylinder (2).
   - Support the master cylinder.
4. Pushrod retainer (10).
5. Retaining clip (21) and washer (22).
6. Booster pushrod (9).

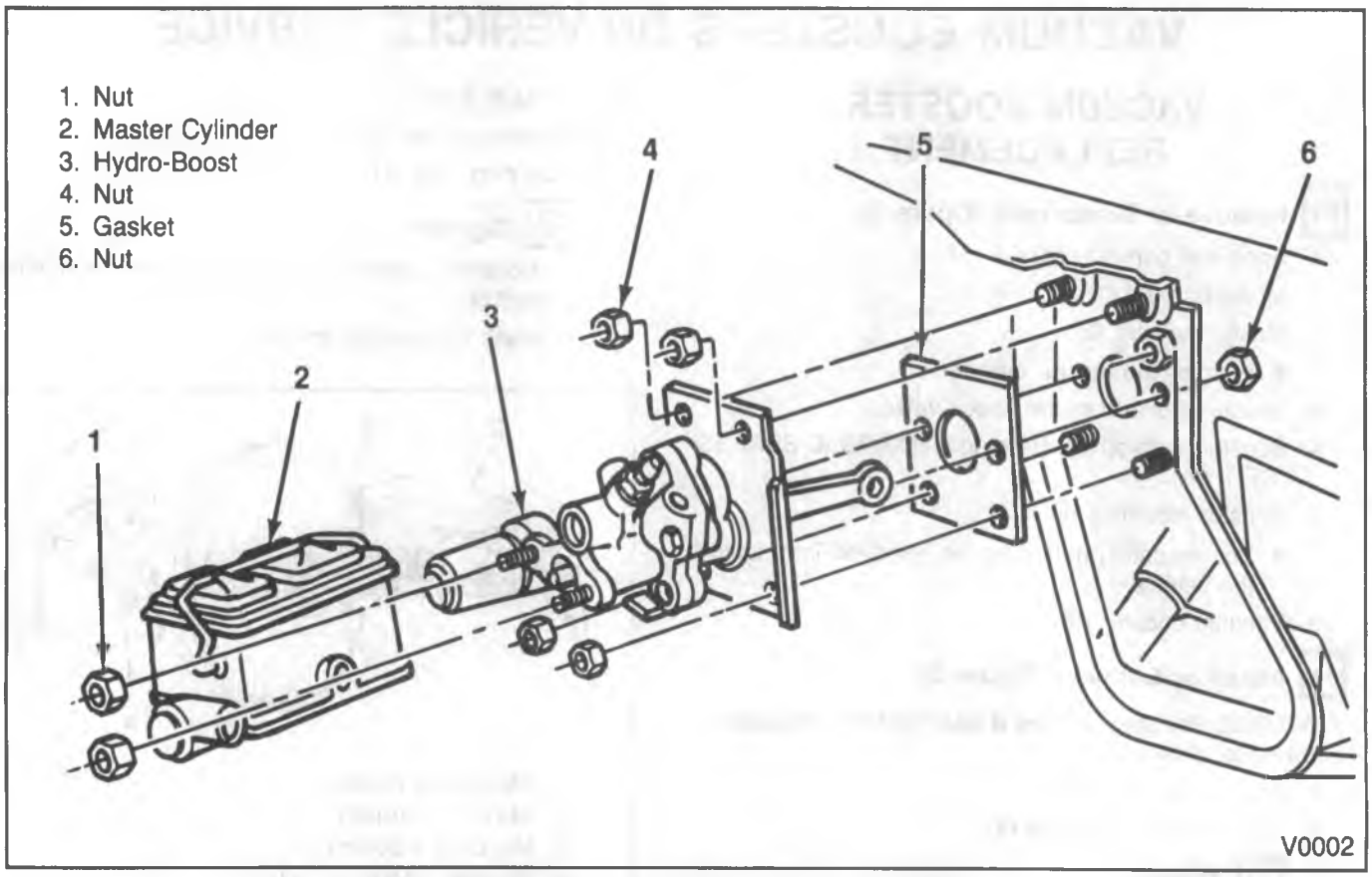

Figure 3—R/V Model Hydro-Boost Replacement

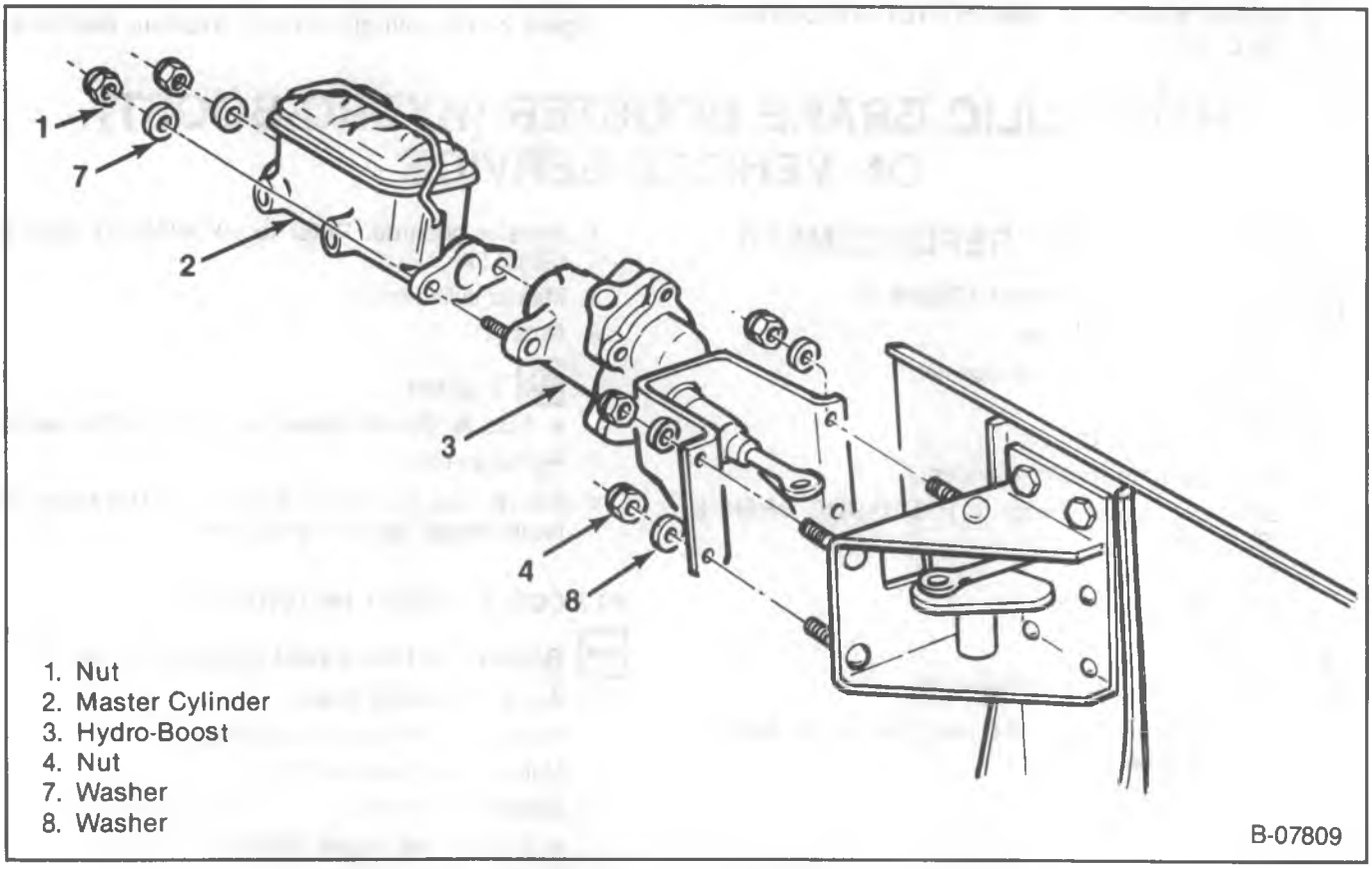

Figure 4—P3 Model Hydro-Boost Replacement; except Motorhome

7. Nuts (4) and washers (8).
8. Hydro-Boost unit (3).

Install or Connect (Figures 4 and 5)

NOTICE: For steps 2 and 7 see "Notice" on page 5A1-1 of this section.

1. Hydro-Boost unit (3).
2. Washers (8) and nuts (4).

Tighten

- Nuts (4) to "Specifications" at the end of this section.

3. Booster pushrod (9).
4. Washer (22) and retaining clip (21).
5. Pushrod retainer (10).
6. Master cylinder (2).
7. Washers (7) and nuts (1).

Tighten

- Nuts (1) to "Specifications" at the end of this section.

8. Hydraulic lines.

- Bleed the booster. Refer to "Bleeding the Hydro-Boost System" in this section.

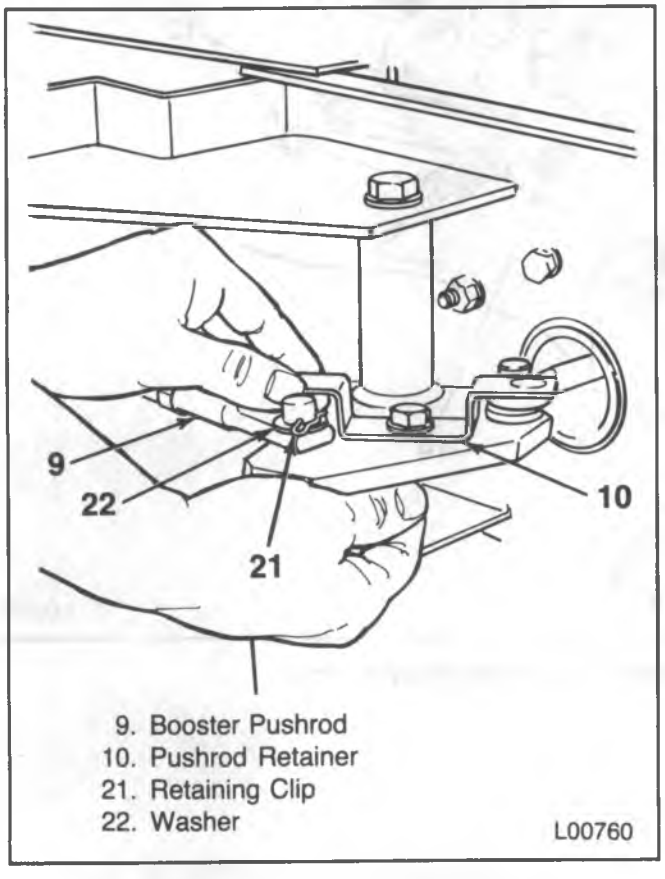

Figure 5—Removing/Installing Pushrod Retainer

P3 MOTORHOME MODEL

Remove or Disconnect (Figure 6)

- Apply the parking brake.

1. Hydraulic lines from the booster.
2. Nuts (12) and washers (13).
3. Master cylinder (2).
   - Support the master cylinder.
4. Brake pedal rod. Refer to HYDRAULIC BRAKES (SEC. 5A).
5. Nut (10).
6. Bolt (16) and washer (11).
7. Nut (14).
8. Bolt (18) and washer (15).
9. Nuts (19).
10. Bolts (17) and washer (13).
11. Hydro-Boost unit (3).

Install or Connect (Figure 6)

NOTICE: For steps 2, 4, 6, 9 and 10 see "Notice" on page 5A1-1 of this section.

1. Hydro-Boost unit (3).
2. Bolts (17) and washers (13).
3. Nuts (19). Leave finger tight.
4. Bolt (18) and washer (15).
5. Nut (14). Leave finger tight.
6. Bolt (16) and washer (11); bolt must be installed with head on inboard side of vehicle.
7. Nut (10). Leave finger tight.

Tighten

- Nuts (10, 14 and 19) to 34 N•m (25 ft. lbs.).

8. Brake pedal rod. Refer to HYDRAULIC BRAKES (SEC. 5A).
9. Master cylinder (2).
10. Nuts (12).

Tighten

- Nuts (12) to 34 N•m (25 ft. lbs.).

11. Hydraulic lines.

- Bleed the booster. Refer to "Bleeding the Hydro-Boost System" in this section.

BLEEDING THE HYDRO-BOOST SYSTEM

Whenever the booster is removed and installed, the steering system should be bled.

NOTICE: The power steering fluid and brake fluid cannot be mixed. If the brake seals contact steering fluid or the steering seals contact brake fluid, seal damage will result.

1. Fill the power steering pump reservoir to the proper level and let the fluid remain undisturbed for at least two minutes.
2. Start the engine and run momentarily.
   - Add fluid, if necessary.
3. Repeat steps 1 and 2 until the fluid level remains constant after running the engine.
4. Raise the front of the vehicle so the wheels are off the ground.
   - Support the vehicle with suitable safety stands.
5. Turn the wheels from stop to stop, lightly contacting the stops.
   - Add fluid, if necessary.
6. Lower the vehicle.
7. Start the engine and depress the brake pedal several times while rotating the steering wheel from stop to stop.
8. Turn the engine off and pump the brake pedal 4-5 times.
9. Check brake fluid level. Add fluid if necessary.
10. If the fluid is extremely foamy, allow the vehicle to stand a few minutes with the engine off. Then repeat steps 7, 8 and 9.
11. Check for the presence of air in the oil. Air in the oil will give the fluid a milky appearance. Air in the system will also cause the fluid level in the pump to rise when the engine is turned off. If it becomes obvious that the pump will not bleed the air after a few attempts, refer to POWER STEERING (SEC. 3B1) for further diagnosis.

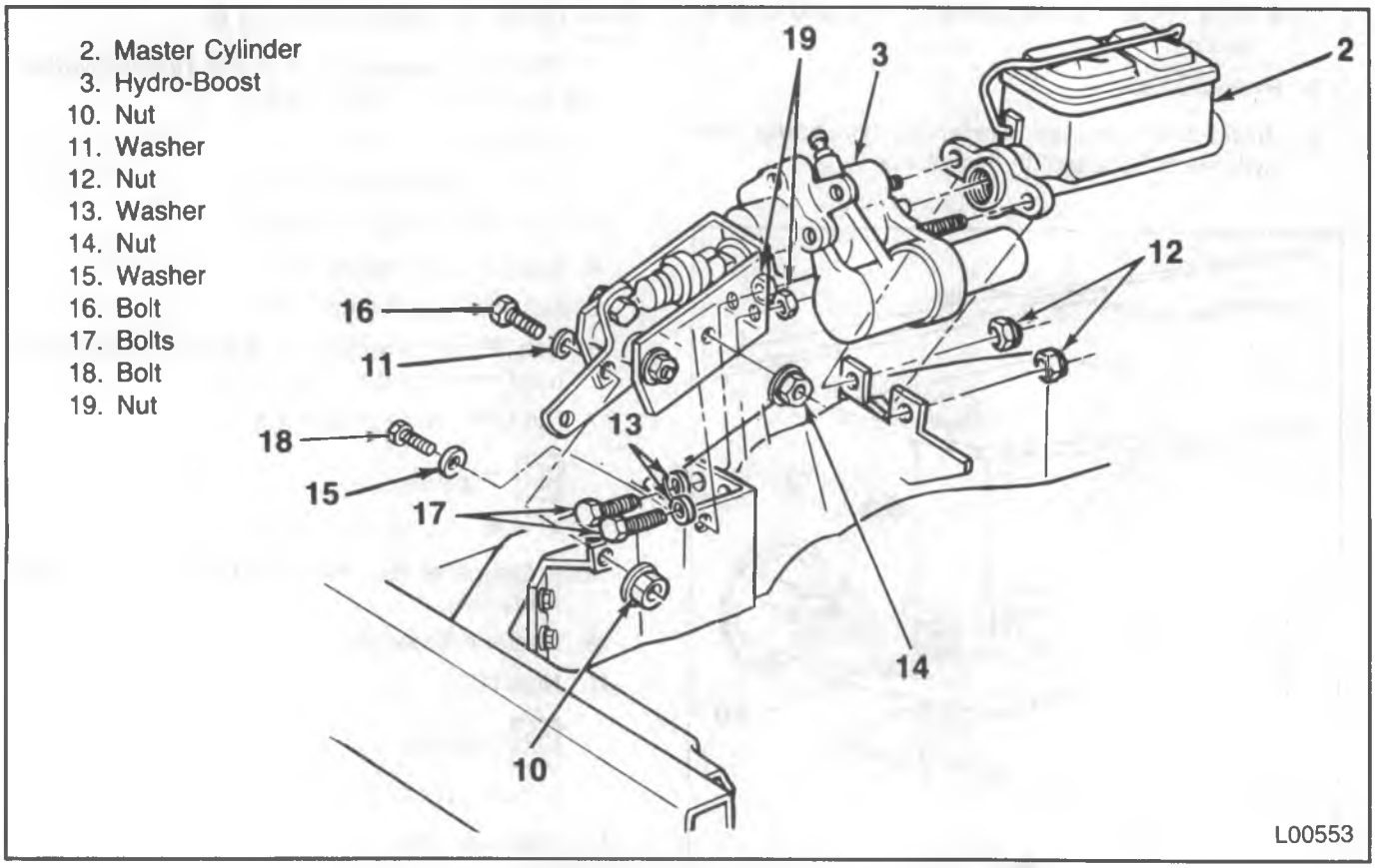

Figure 6—P3 Model Motorhome Hydro-Boost Replacement

SPECIFICATIONS

BRAKE SYSTEMS

System	Front Brakes	Rear Brakes	Brake Assist
	GASOLINE ENGINE VEHICLES		
	ALL MODELS		
JB5 Low Drag	Disc 11.86 x 1.29	Drum 11.15 x 2.75	Vacuum — Dual Diaphragm
JB6 Low Drag	Disc 12.50 x 1.28	Drum 11.15 x 2.75	Vacuum — Dual Diaphragm
JB7 Conventional	Disc 12.50 x 1.28	Drum 13.00 x 2.50	Vacuum — Dual Diaphragm
JB8 Conventional	Disc 12.50 x 1.54	Drum 13.00 x 3.50	Hydraulic — Hydro-Boost
JF9 Conventional	Disc 14.25 x 1.54	Disc 13.75 x 1.54	Hydraulic — Hydro-Boost
	DIESEL ENGINE VEHICLES		
JD3 Low Drag	Disc 11.86 x 1.29	Drum 11.00 x 2.00	Hydraulic — Hydro-Boost
JD5 Low Drag	Disc 11.86 x 1.29	Drum 11.15 x 2.75	Hydraulic — Hydro-Boost
JD6 Conventional	Disc 12.50 x 1.28	Drum 11.15 x 2.75	Hydraulic — Hydro-Boost
JD7 Conventional	Disc 12.50 x 1.28	Drum 13.00 x 2.50	Hydraulic — Hydro-Boost

GMTB-3050-2A

FASTENER TORQUE

DESCRIPTION	R	V	P
Master Cylinder to Booster	27 N•m (20 ft. lbs.)	27 N•m (20 ft. lbs.)	27 N•m (20 ft. lbs.)
Booster to Dash or Frame	29 N•m (21 ft. lbs.)	29 N•m (21 ft. lbs.)	24 N•m (18 ft. lbs.)
Hydro — Boost — Pedal Rod — P3 Motorhome Models	—	—	34 N•m (25 ft. lbs.)
— Pedal Rod Boot — P3 Motorhome Models	—	—	16 N•m (12 ft. lbs.)
— Pivot Lever Rod Retainer	—	—	34 N•m (25 ft. lbs.)
— Pivot Lever Bolt	—	—	60 N•m (45 ft. lbs.)
— Booster Brackets	—	—	34 N•m (25 ft. lbs.)
— Booster Brace at Dash or Rad. Supt.	—	—	17 N•m (150 in. lbs.)
— Power Steering Pump to Booster Line	34 N•m (25 ft. lbs.)		
— Booster to Gear Line	34 N•m (25 ft. lbs.)		
— Return Line at Booster and Gear	34 N•m (25 ft. lbs.)		
— Return Line Clamp Screw	1.6 N•m (15 in. lbs.)		2.5 N•m (22 in. lbs.)
— Line Clamp to Bracket Screw	17 N•m (150 in. lbs.)		
— Hose Clamp to Fender Screw	4.5 N•m (40 in. lbs.)	—	—
— Line Clamp to Frame Bolt or Nut	17 N•m (150 in. lbs.)	—	17 N•m (150 in. lbs.)
— Booster to Dash or Frame	24 N•m (18 ft. lbs.)	24 N•m (18 ft. lbs.)	29 N•m (21 ft. lbs.)

GMTB-3049-2A

SECTION 5A2

HYDRAULIC FOUNDATION BRAKES

NOTICE: When fasteners are removed, always reinstall them at the same location from which they were removed. If a fastener needs to be replaced, use the correct part number fastener for that application. If the correct part number fastener is not available, a fastener of equal size and strength (or stronger) may be used. Fasteners that are not reused, and those requiring thread locking compound will be called out. The correct torque value must be used when installing fasteners that require it. If the above conditions are not followed, parts or system damage could result.

CAUTION: When servicing wheel brake parts, do not create dust by grinding or sanding brake linings or by cleaning wheel brake parts with a dry brush or with compressed air. (A water dampened cloth should be used.) Many wheel brake parts contain asbestos fibers which can become airborne if dust is created during servicing. Breathing dust containing asbestos fibers may cause serious bodily harm.

CONTENTS

SUBJECT	PAGE
Disc Brakes Description	5A2- 1
Brake Lining Inspection	5A2- 1
Brake Lining Replacement	5A2- 2
Servicing the Rotor	5A2- 6
Caliper Replacement	5A2- 7
Rebuilding the Caliper	5A2- 8
Drum Brakes Description	5A2-11
Brake Lining Replacement	5A2-11
Servicing the Brake Drum	5A2-13
Brake Adjustment	5A2-13
Wheel Cylinder Replacement	5A2-13
Rebuilding the Wheel Cylinder	5A2-14
Specifications	5A2-14
Special Tools	5A2-15

DISC BRAKES DESCRIPTION

The disc brake assembly consists of a caliper and piston assembly, rotor, linings, and an anchor plate. The caliper is mounted to the anchor plate, which allows the caliper to move laterally against the rotor. The caliper is a one-piece casting with the inboard side containing the piston bore. A square-cut rubber seal is located in a groove in the piston bore which provides the hydraulic seal between the piston and the cylinder wall.

OPERATION

As the brake pedal is depressed, hydraulic pressure is applied against the piston. This pressure pushes the inboard brake lining against the inboard braking surface of the rotor. As the force increases against the rotor, the caliper assembly moves inboard providing a clamping action on the rotor.

When the brake pressure is released, the piston seal returns to its normal position, pulling the piston back into the caliper bore. This creates a running clearance between the inboard brake lining and the rotor.

BRAKE LINING INSPECTION

Check the outer pad by looking at each end of the caliper (figure 1). Check the lining thickness on the inner pad by looking down through the inspection hole in the top of the caliper housing. Whenever the lining is worn to about the same thickness as the steel backing pad to which it is mounted, the lining should be removed for further measurements. The pad should be replaced any time the lining is worn to within 0.80 mm (1/32-inch) of a rivet head or the backing pad itself.

The disc brake pads have a wear indicator that makes a noise when the linings wear to a degree where replacement is required (figure 2).

Also check the flatness of the brake pads. Place the inboard and outboard lining surfaces together and check for a gap between the lining surfaces. This gap should not exceed 0.13 mm (.005-inch) at the middle of the lining surfaces. This applies to new or used brake pads.

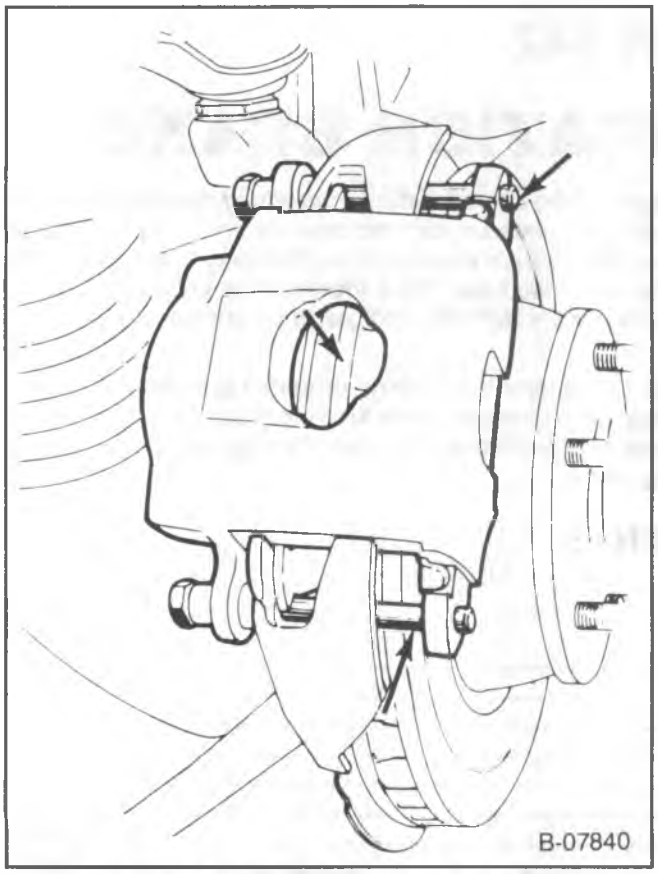

Figure 1—Lining Inspection Points

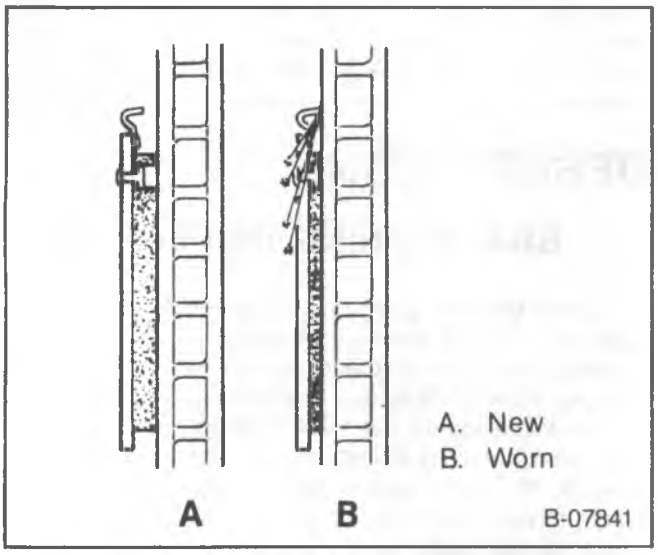

Figure 2—Brake Pad Wear Indicator

BRAKE LINING REPLACEMENT

GM replacement brake lining material is recommended for this vehicle to maintain the balance between front and rear brake performance. GM replacement brake parts have been carefully selected to provide the proper brake balance for purposes of both stopping distance and controllability over the full range of operating conditions. Installation of front or rear brake lining material with performance different from that of the GM replacement parts recommended for this vehicle can change the intended brake balance of this vehicle.

3000/3100 MODEL CALIPERS

Remove or Disconnect (Figure 3)

- Remove two-thirds of the brake fluid from the master cylinder.
- Raise the vehicle and support it with suitable safety stands.
- Mark the relationship of the wheel to the hub.

1. Wheel and tire assembly. Refer to WHEELS AND TIRES (SEC. 3E).

CAUTION: See "Caution" on page 5A2-1 of this section.

- Position a C-clamp around the outer pad and caliper and tighten until the caliper piston bottoms in its bore (figure 4).

2. C-clamp.

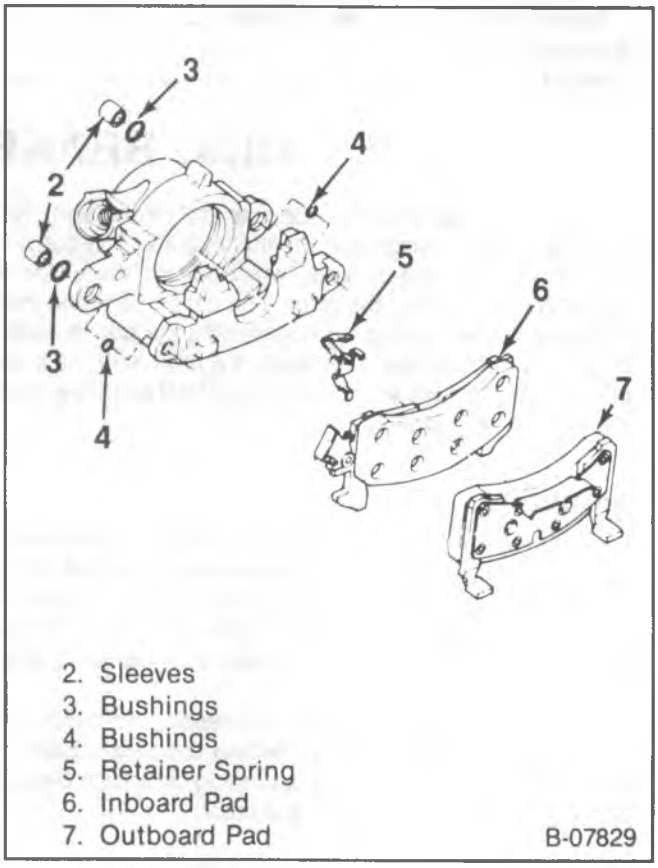

Figure 3—Replacing Disc Brake Pads (3000/3100)

3. Mounting bolts (figure 5).
4. Caliper assembly.
   - Suspend the caliper from the suspension (figure 6).

Important

- Do not allow the brake components to hang from the flexible hoses as damage to the hoses may occur.

5. Inboard pad (6).
6. Retainer spring (5).
7. Outboard pad (7).
8. Sleeves (2).
9. Bushings (3 and 4).

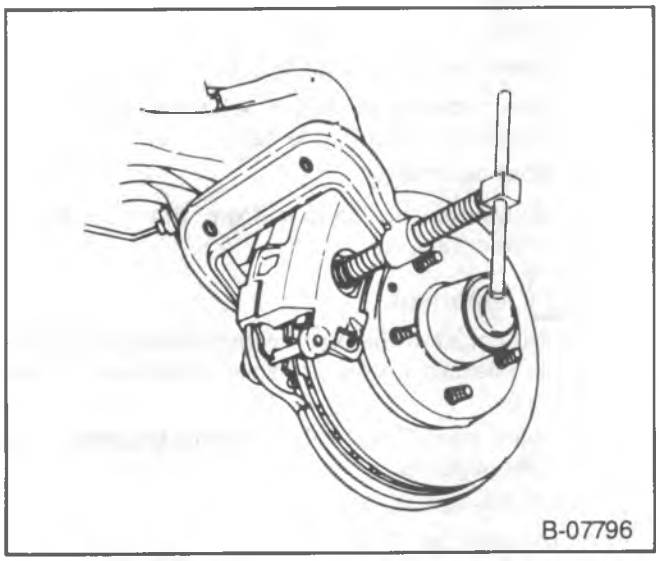

Figure 4—Compressing the Caliper Piston

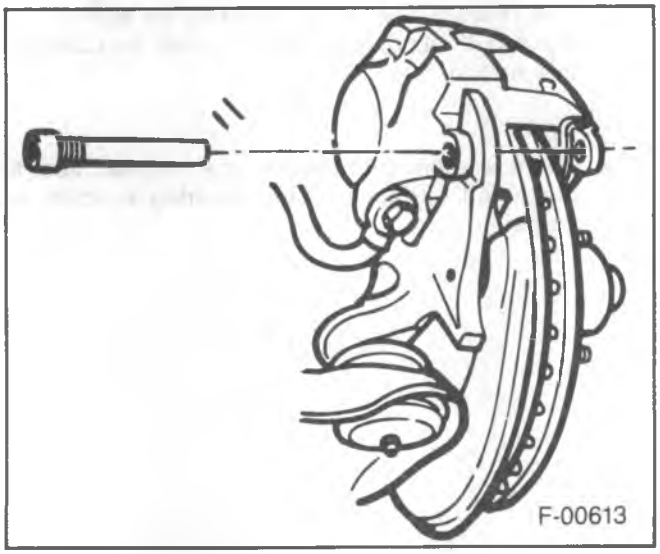

Figure 5—Removing/Installing Caliper Mounting Bolts

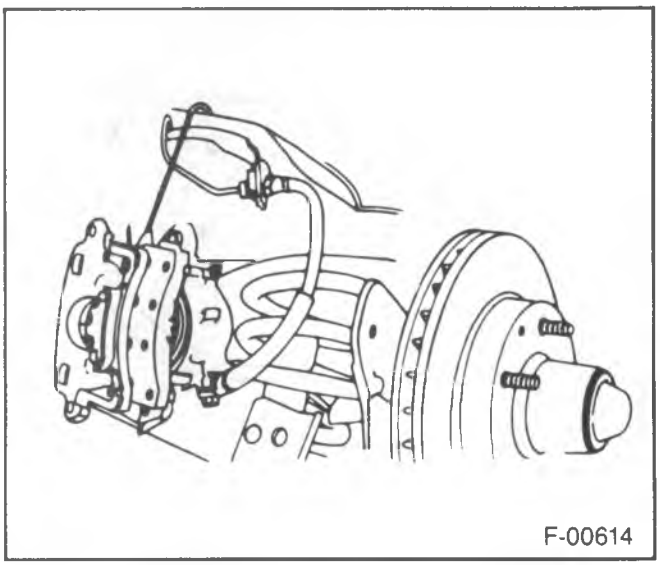

Figure 6—Suspending the Caliper During Service

Inspect

- The inside of the caliper assembly for signs of fluid leakage. If found, refer to "Rebuilding the Caliper" in this section.
- Mounting bolts and sleeves for corrosion. If corrosion is found, replace the bolts; do not attempt to polish away the corrosion.

Install or Connect (Figure 3)

- Lubricate the sleeves and bushings with Delco Silicone Lube or equivalent.

1. Bushings (3 and 4).
2. Sleeves (2).
3. Retainer spring (5) onto the inboard pad (6).
   4 Inboard pad (6).
5. Outboard pad (7).
6. Caliper assembly.

Important

- Make sure that the brake hose is not twisted or kinked since damage to the hose could result.

NOTICE: See "Notice" on page 5A2-1 of this section.

7. Mounting bolts (figure 5).

Tighten

- Bolts to 48 N•m (35 lb. ft.).

8. Compress the pad ears to the caliper (figure 7).

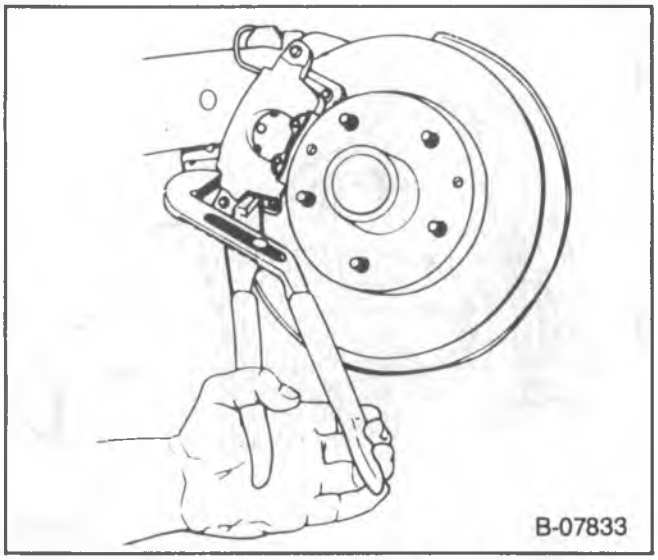

Figure 7—Compressing the Brake Pad Ears

Measure (Figure 8)

- The clearance between the caliper and the steering knuckle. The clearance at each end of the caliper should be measured individually and added together. This total should be between 0.26 - 0.60 mm (0.010 - 0.024-inches).

9. Wheel and tire assembly. Refer to WHEELS AND TIRES (SEC. 3E).

- Lower the vehicle.

Important

- Before moving the vehicle, pump the brake pedal several times to make sure that the pedal is firm. Do not move the vehicle until a firm pedal is obtained. Check the brake fluid level in the master cylinder after pumping the brakes.

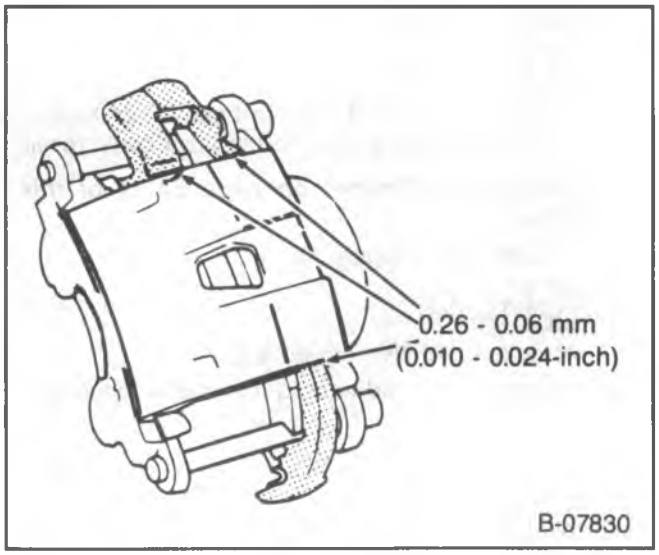

Figure 8—Caliper/Knuckle Clearances

BENDIX MODEL CALIPER

Remove or Disconnect (Figures 9 and 10)

- Remove two-thirds of the brake fluid from the master cylinder.
- Raise the vehicle and support it with suitable safety stands.
- Mark the relationship of the wheel to the hub.

1. Wheel and tire assembly. Refer to WHEELS AND TIRES (SEC. 3E).

CAUTION: See "Caution" on page 5A2-1 of this section.

- Position C-clamp and tighten until the piston bottoms in its bore (figure 11).

2. C-clamp.
3. Bolt (8).
4. Support key (9) and spring (10).
   - Use a brass punch and a hammer to drive the support key out (figure 12).
5. Caliper assembly.
   - Suspend the caliper from the suspension (figure 13).

Important

- Do not allow the brake components to hang from the flexible hoses as damage to the hoses may occur.

6. Inboard pad (6) from the steering knuckle or rear caliper support.
7. Anti-rattle spring (11).
8. Outboard pad (7).

Inspect

- The inside of the caliper assembly for signs of fluid leakage. If found, refer to "Rebuilding the Caliper" in this section.

Clean

- Use a wire brush to remove any corrosion from the machined surfaces of the steering knuckle and caliper.

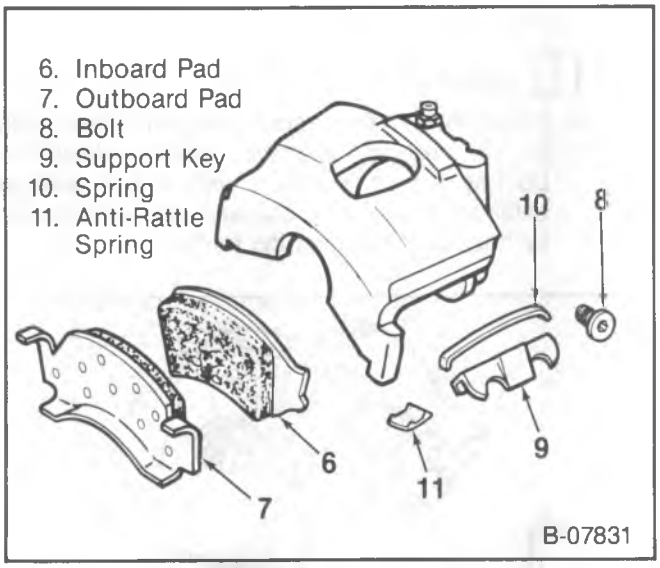

Figure 9—Replacing Disc Brake Pads (Bendix)

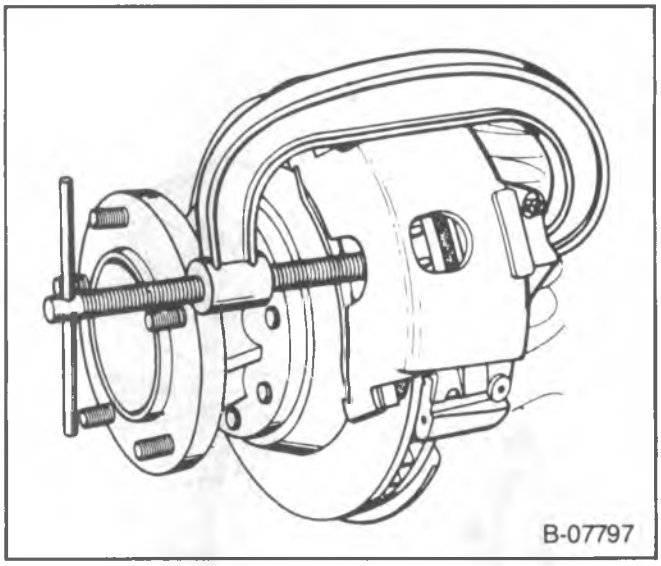

Figure 11—Compressing the Caliper Piston (Bendix)

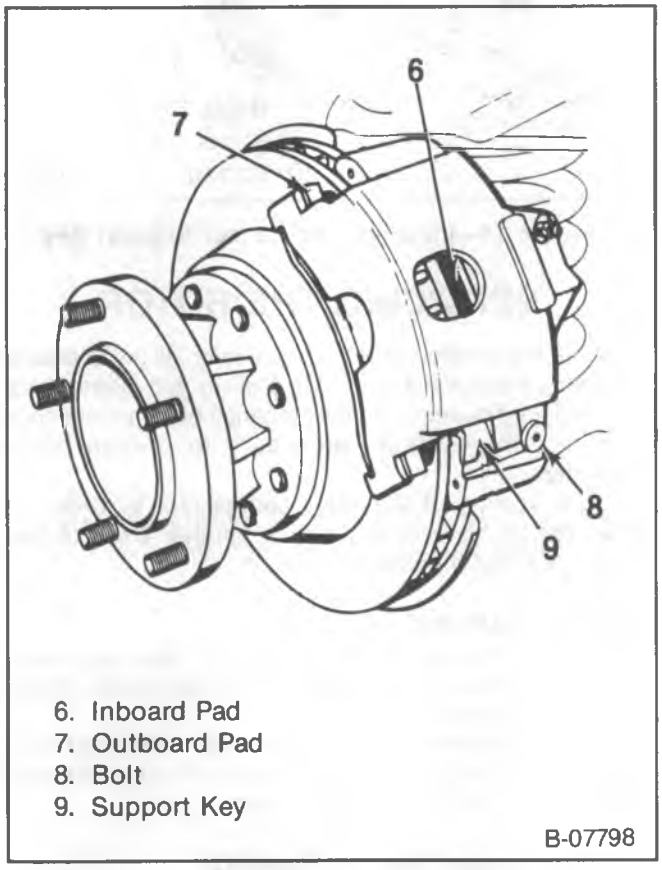

Figure 10—Disc Brake Assembly (Bendix)

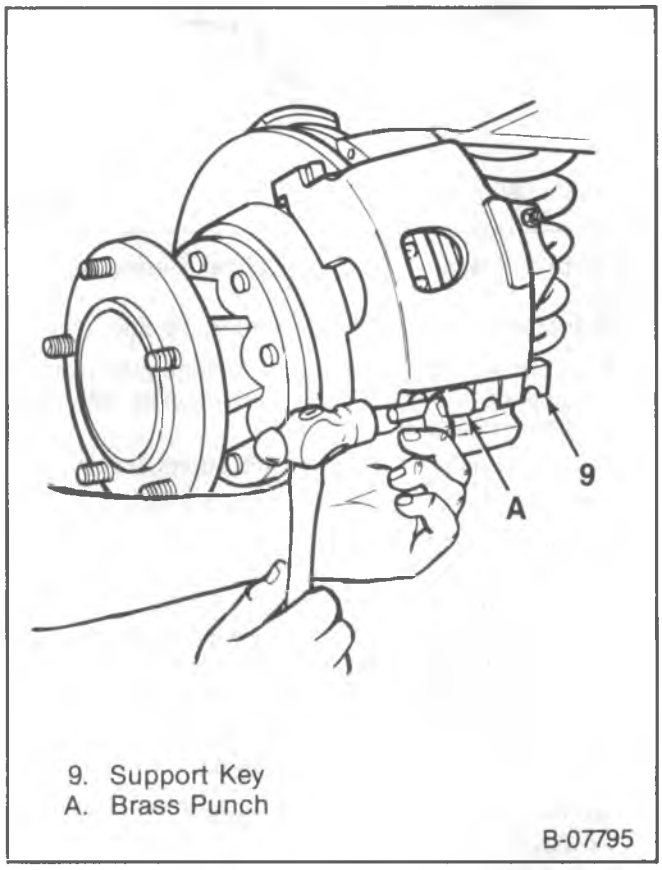

Figure 12—Removing the Caliper Support Key

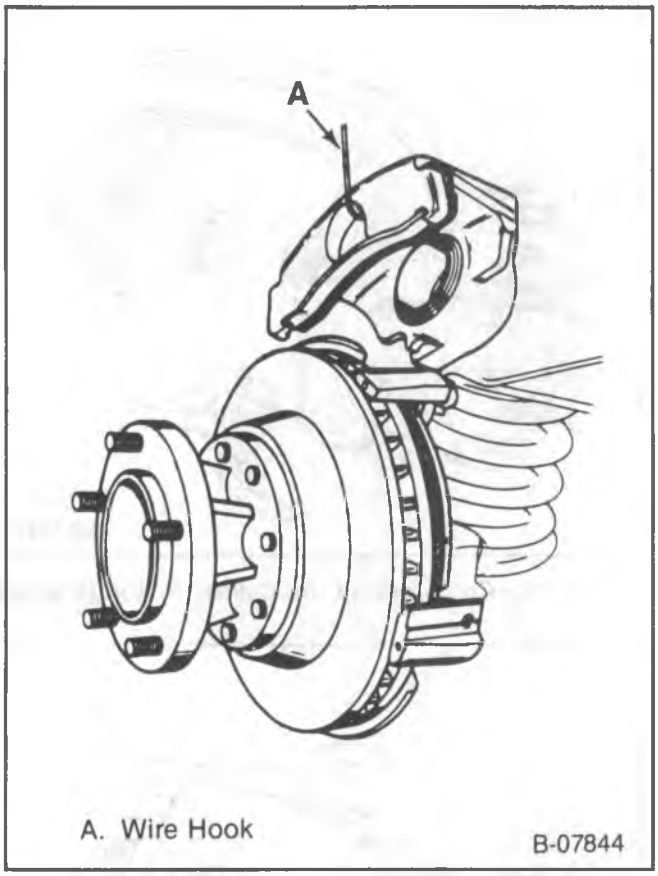

Figure 13—Suspending the Caliper During Service

Install or Connect (Figures 9, 10 and 14)

- Lubricate the caliper and steering knuckle (or support) sliding surfaces and spring with Delco Silicone Lube or equivalent.

1. Inboard pad (6) and anti-rattle spring (11).
2. Outboard pad (7) into the caliper assembly.
3. Caliper assembly.

Important

- Make sure that the brake hose is not twisted or kinked since damage to the hose could result.

4. Spring (10) and support key (9).
   - Use a brass punch and a hammer to drive the support key in place (figure 14).

NOTICE: See "Notice" on page 5A2-1 of this section.

5. Bolt (8).
   - The boss on the bolt must fully fit into the circular cutout in the key.

Tighten

- Bolt to 20 N•m (15 ft. lbs.).

6. Wheel and tire assembly. Refer to WHEELS AND TIRES (SEC. 3E).

- Lower the vehicle.

Important

- Before moving the vehicle, pump the brake pedal several times to make sure that the pedal is firm. Do not move the vehicle until a firm pedal is obtained. Check the brake fluid level in the master cylinder after pumping the brakes.

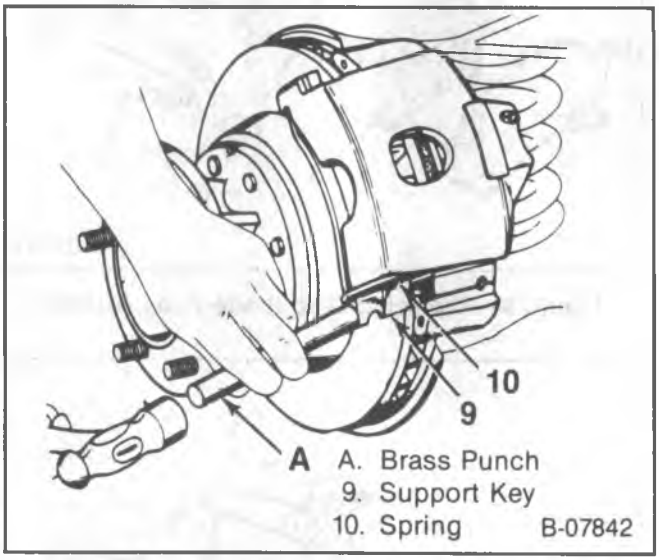

Figure 14—Installing the Caliper Support Key

SERVICING THE ROTOR

In the manufacturing of the brake rotor, all the tolerances regarding the surface finish, parallelism and lateral runout are held very closely. The maintenance of these tolerances provides the surface necessary to prevent brake roughness.

Light scoring of the rotor surface not in excess of 0.38 mm (0-.15-inch) in depth is normal. This condition does not affect the brake operation.

LATERAL RUNOUT

Lateral runout is the movement of the rotor from side to side as it rotates on the spindle. This is sometimes referred to as "rotor wobble."

This movement causes the brake pad and piston to be knocked back into its bore. This results in additional pedal travel and a vibration during braking.

Checking Lateral Runout (Figure 15)

1. Tighten the wheel bearings to eliminate all free play.
2. Attach a dial indicator to some portion of the suspension.
   - The point of the stylus must contact the rotor face about 25 mm (1-inch) from the rotor outer edge.
3. Move the rotor one complete rotation.
   - The lateral runout should not exceed 0.10 mm (0.004-inch).
4. Adjust the wheel bearings. Refer to FRONT SUSPENSION AND AXLE (SEC. 3C).

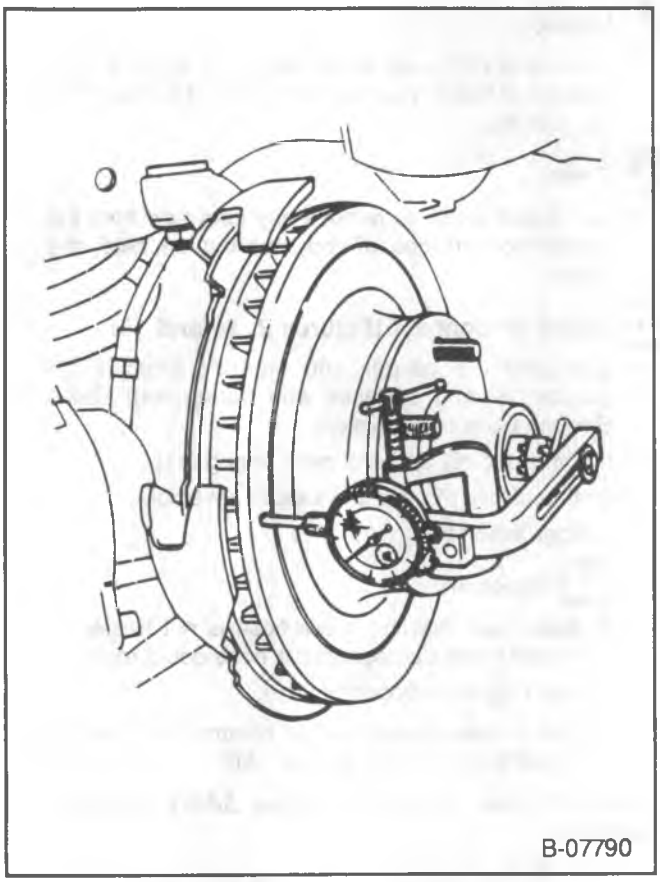

Figure 15—Checking Rotor Lateral Runout

PARALLELISM

Parallelism of a brake rotor refers to the inner and outer surfaces of the rotor being parallel. To determine rotor parallelism, measure the thickness of the rotor at four or more points around its circumference. Each measurement must be made at the same distance from the edge of the rotor. The rotor thickness must not vary more than 0.013 mm (0.0005-inch) from point to point.

MACHINING

It is not always necessary to refinish the brake rotors during routine replacement of disc brake linings. The rotors should be refinished only if non-parallelism, runout, hard spots or deep scoring have occurred.

All brake rotors have a minimum thickness dimension cast into them. This dimension is the minimum wear dimension and not a refinishing dimension. Do not use a brake rotor that will not meet the specifications after refinishing. A rotor that has been refinished too thin will not have proper heat transfer capabilities. Replace it with a new brake rotor. Refer to "Specifications" in this section.

Accurate control of the rotor tolerances is necessary for proper performance of the disc brakes. Refinishing of the rotor should be done only with precision equipment.

When refinishing rotors, always use sharp cutting tools or bits. Dull or worn tools leave a poor surface finish which will affect initial braking performance. Vibration dampening attachments should always be used when refinishing braking surfaces. These attachments eliminate tool chatter and will result in a better surface finish.

When refinishing the rotor surface, the speed of the cutting will vary on each machine. If cutting information is unavailable, the following should be used only as a guide.

The best speed for refinishing braking rotor surfaces is a spindle speed of 200 rpm. Rough cutting crossfeed should range from 0.15 to 0.25 mm (0.006 to 0.010 inch) per revolution. Finish cuts should be made at crossfeeds no greater than 0.051 mm (0.002 inch) per revolution. The lathe finish cuts should be made non-directional by dressing the rotor surfaces with a sanding disc power tool or AMMCO Model 8350 Safe Swirl Disc Rotor Grinder or equivalent.

CALIPER REPLACEMENT

3000/3100 MODEL CALIPERS

Remove or Disconnect (Figure 3)

- Remove two-thirds of the brake fluid from the master cylinder.
- Raise the vehicle and support it with suitable safety stands.
- Mark the relationship of the wheel to the hub.

1. Wheel and tire assembly. Refer to WHEELS AND TIRES (SEC. 3E).

CAUTION: See "Caution" on page 5A2-1 of this section.

- Position a C-clamp around the outer pad and caliper and tighten until the caliper piston bottoms in its bore (figure 4).

2. C-clamp.
3. Brake hose from the caliper.
4. Mounting bolts (figure 5).
5. Caliper assembly.
6. Inboard pad.
   - Save the pad if it is reusable.
7. Outboard pad.
   - Save the pad if it is reusable.
8. Retainer spring (5).
9. Sleeves (2).
10. Bushings (3 and 4).

Inspect

- The inside of the caliper assembly for signs of fluid leakage. If found, refer to "Rebuilding the Caliper" in this section.
- Mounting bolts and sleeves for corrosion. If corrosion is found, replace the bolts; do not attempt to polish away the corrosion.

Install or Connect (Figure 3)

- Lubricate the sleeves and bushings with Delco Silicone Lube or equivalent.

1. Bushings (3 and 4).
2. Sleeves (2).
3. Retainer spring (5) onto the inboard pad (6).
4. Inboard pad (6).
5. Outboard pad (7).
6. Caliper assembly.

Important

- Make sure that the brake hose is not twisted or kinked since damage to the hose could result.

NOTICE: See "Notice" on page 5A2-1 of this section.

7. Mounting bolts (figure 5).

Tighten

- Bolts to 48 N•m (35 lb. ft.).

8. Compress the pad ears to the caliper (figure 7).
9. Brake hose to the caliper.

- Bleed the brake system. Refer to HYDRAULIC BRAKES (SEC. 5A).

Measure (Figure 8)

- The clearance between the caliper and the steering knuckle. The clearance at each end of the caliper should be measured individually and added together. This total should be between 0.26-0.60 mm (0.010-0.024-inches).

10. Wheel and tire assembly. Refer to WHEELS AND TIRES (SEC. 3E).

- Lower the vehicle.

Important

- Before moving the vehicle, pump the brake pedal several times to make sure that the pedal is firm. Do not move the vehicle until a firm pedal is obtained. Check the brake fluid level in the master cylinder after pumping the brakes.

BENDIX MODEL CALIPER

Remove or Disconnect (Figures 9 and 10)

- Remove two-thirds of the brake fluid from the master cylinder.
- Raise the vehicle and support it with suitable safety stands.
- Mark the relationship of the wheel to the hub.

1. Wheel and tire assembly. Refer to WHEELS AND TIRES (SEC. 3E).

CAUTION: See "Caution" on page 5A2-1 of this section.

- Position C-clamp and tighten until the piston bottoms in its bore (figure 11).

2. C-clamp.
3. Brake hose from the caliper.
4. Bolt (8).
5. Support key (9) and spring (10).
   - Use a brass punch and a hammer to drive the support key out (figure 12).
6. Caliper assembly.
7. Inboard pad (6) from the steering knuckle or rear caliper support.
   - Save the pad if it is reusable.
8. Anti-rattle spring (11).
9. Outboard pad (7).
   - Save the pad if it is reusable.

Inspect

- The inside of the caliper assembly for signs of fluid leakage. If found, refer to "Rebuilding the Caliper" in this section.

Clean

- Use a wire brush to remove any corrosion from the machined surfaces of the steering knuckle and caliper.

Install or Connect (Figures 9, 10 and 14)

- Lubricate the caliper and steering knuckle (or support) sliding surfaces and spring with Delco Silicone Lube or equivalent.

1. Inboard pad (6) and anti-rattle spring (11).
2. Outboard pad (7) into the caliper assembly.
3. Caliper assembly.

Important

- Make sure that the brake hose is not twisted or kinked since damage to the hose could result.

4. Spring (10) and support key (9).
   - Use a brass punch and a hammer to drive the support key in place (figure 14).

NOTICE: See "Notice" on page 5A2-1 of this section.

5. Bolt (8).
   - The boss on the bolt must fully fit into the circular cutout in the key.

Tighten

- Bolt to 20 N•m (15 ft. lbs.)

6. Brake hose to the caliper.

- Bleed the brake system. Refer to HYDRAULIC BRAKES (SEC. 5A).

7. Wheel and tire assembly. Refer to WHEELS AND TIRES (SEC. 3E).

- Lower the vehicle.

Important

- Before moving the vehicle, pump the brake pedal several times to make sure that the pedal is firm. Do not move the vehicle until a firm pedal is obtained. Check the brake fluid level in the master cylinder after pumping the brakes.

REBUILDING THE CALIPER

3000/3100 MODEL CALIPERS

Remove or Disconnect (Figure 16)

- Drain all the fluid from the caliper.
- Pad the interior of the caliper with clean shop towels.

CAUTION: Do not place your fingers in front of the piston in an attempt to catch or protect it when applying compressed air. This could result in serious injury.

NOTICE: Use just enough air to ease the piston out of the bore. If the piston is blown out—even with padding provided, it may be damaged.

1. Piston (22) by directing compressed air into the caliper fluid inlet (figure 17).
   - Use just enough air pressure to ease the piston out of the bore.
2. Boot (23) (figure 18).
   - Use care not to scratch the caliper's piston bore.
3. Piston seal (21).
   - Do not use any type of metal tool.
4. Bleeder valve (20).

Clean

- Bleeder valve, caliper bore, caliper passages and piston with denatured alcohol. Use dry, filtered compressed air to dry parts and blow out passages.

Inspect

- Piston for scoring, corrosion and any damage to the chrome plating. Replace if any of these conditions are found.
- Caliper bore for scoring, pitting or corrosion. Use crocus cloth to polish out any light corrosion. Replace caliper if corrosion cannot be removed.

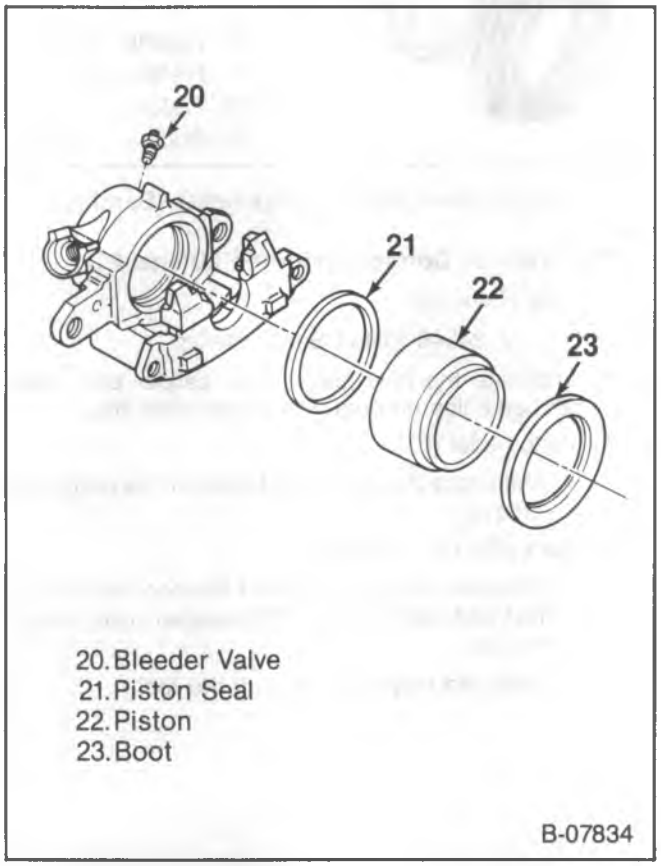

Figure 16—Caliper Components (3000/3100)

Install or Connect (Figure 16)

Tool Required:

J 28735 Piston Seal Installer

- Lubricate the new piston seal, caliper bore and piston with clean brake fluid.

1. Piston seal (21).
   - Make sure the seal is not twisted in the caliper bore groove.
2. Boot (23) onto the piston (22).
3. Piston (22).
4. Boot (23) into the caliper housing counterbore using J 28735 (figure 19).
5. Bleeder valve (20).

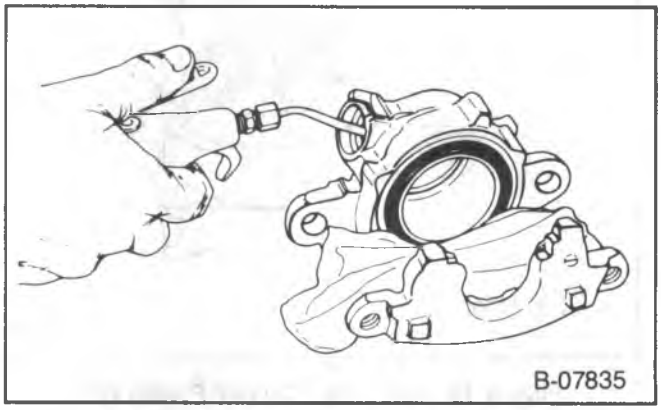

Figure 17—Removing Caliper Piston

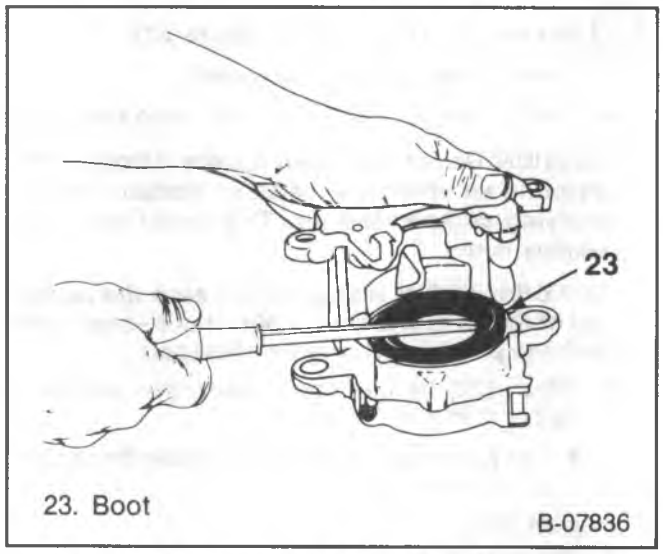

Figure 18—Removing Caliper Piston Boot

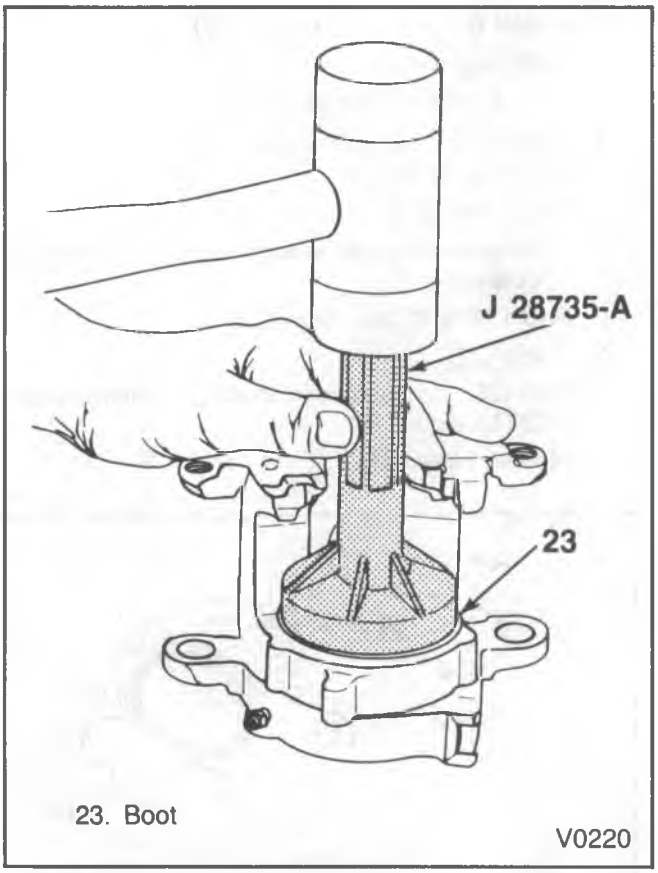

Figure 19—Installing Caliper Piston Boot

BENDIX MODEL CALIPERS

Remove or Disconnect (Figure 20)

- Drain all the fluid from the caliper.
- Pad the interior of the caliper with clean shop towels.

CAUTION: Do not place your fingers in front of the piston in an attempt to catch or protect it when applying compressed air. This could result in serious injury.

NOTICE: Use just enough air to ease the piston out of the bore. If piston is blown out—even with padding provided, it may be damaged.

1. Piston (22) by directing compressed air into the caliper fluid inlet (figure 17).
   - Use just enough air pressure to ease the piston out of the bore.
2. Boot (23).
3. Piston seal (21).
   - Do not use any type of metal tool
4. Bleeder valve (20).

Clean

- Bleeder valve, caliper bore, caliper passages and piston with denatured alcohol. Use dry, filtered compressed air to dry parts and blow out passages.

Inspect

- Piston for scoring, corrosion and any damage to the chrome plating. Replace if any of these conditions are found.
- Caliper bore for scoring, pitting or corrosion. Use crocus cloth to polish out any light corrosion. Replace caliper if the corrosion cannot be removed.

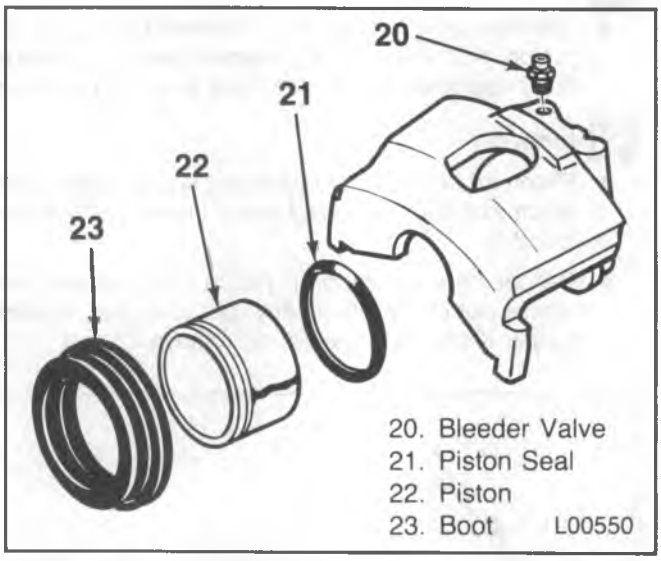

Figure 20—Caliper Components (Bendix)

Install or Connect (Figures 20 and 21)

Tool Required:

J 24548 Piston Seal Installer

- Lubricate the new piston seal, caliper bore, piston and seal lips on boot with clean brake fluid.

1. Piston seal (21).
   - Make sure the seal is not twisted in the caliper bore groove.
2. Boot (23) on J 24548.
   - Place the large diameter of the boot over the tool first and carefully work the smaller diameter onto the tool.
   - Slide the large diameter off the tool.

3. The large lip of the boot into the groove in the caliper bore.
   - The lip of the boot must be firmly seated in the groove.
4. Piston (22) inside J 24548 (figure 21).
5. Piston halfway into its bore.
   - Remove J 24548.
   - Make sure the boot is firmly seated.
6. Bleeder valve (20).

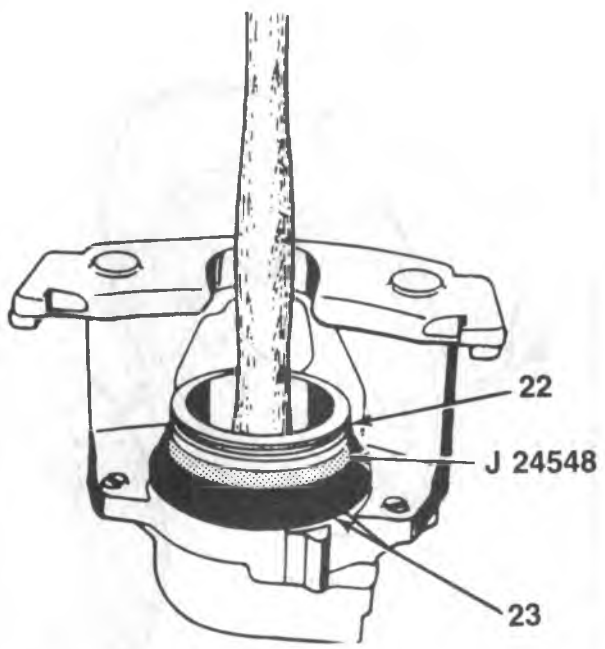

22. Piston
23. Boot

L00555

Figure 21—Installing Caliper Piston

DRUM BRAKES DESCRIPTION

The drum brake assembly is a duo-servo design. With this particular design, the force applied by the wheel cylinder to the primary shoe forces the leading edge of the shoe into contact with the rotating drum, causing the shoe to try to rotate. The shoe, in its attempt to rotate with the drum, transfers force to the secondary shoe through the starwheel adjuster. This causes the secondary shoe's leading edge to "bite" into the drum and attempt to rotate, just as the primary shoe does. Since the shoes cannot rotate, they tend to wedge themselves into the drum. In this way, the rotating torque augments the braking force applied to the shoes by the wheel cylinder. Because the shoes are used for this wedging action, the system is called duo-servo, as opposed to a single servo design where wheel cylinder pressure alone is the source of braking force.

The torque from the brake shoes is transferred through the backing plate to the axle flange. Brake adjustments are automatic and are made during reverse brake applications.

BRAKE LINING REPLACEMENT

GM replacement brake lining material is recommended for this vehicle to maintain the balance between front and rear brake performance. GM replacement brake parts have been carefully selected to provide the proper brake balance for purposes of both stopping distance and controllability over the full range of operating conditions. Installation of front or rear brake lining material with performance different from that of the GM replacement parts recommended for this vehicle can change the intended brake balance of this vehicle.

Remove or Disconnect (Figure 22)

- Raise the vehicle and support with suitable safety stands.
- Mark the relationship of the wheel to the hub.

1. Wheel and tire assembly. Refer to WHEELS AND TIRES (SEC. 3E).

CAUTION: See "Caution" on page 5A2-1 of this section.

2. Drum.
   - Mark the relationship of the drum to the axle.
3. Return springs (12 and 13).
4. Shoe guide (7).
5. Hold-down springs (14).
6. Hold-down pins (1).
7. Actuator lever (10) and lever pivot (15).
8. Lever return spring (16).
9. Actuator link (11).
10. Parking brake strut (8).
11. Strut spring (9).
12. Retaining ring (6).
13. Parking brake lever (3) and washer (4).
14. Shoes (5 and 19).
15. Adjusting screw assembly (17).

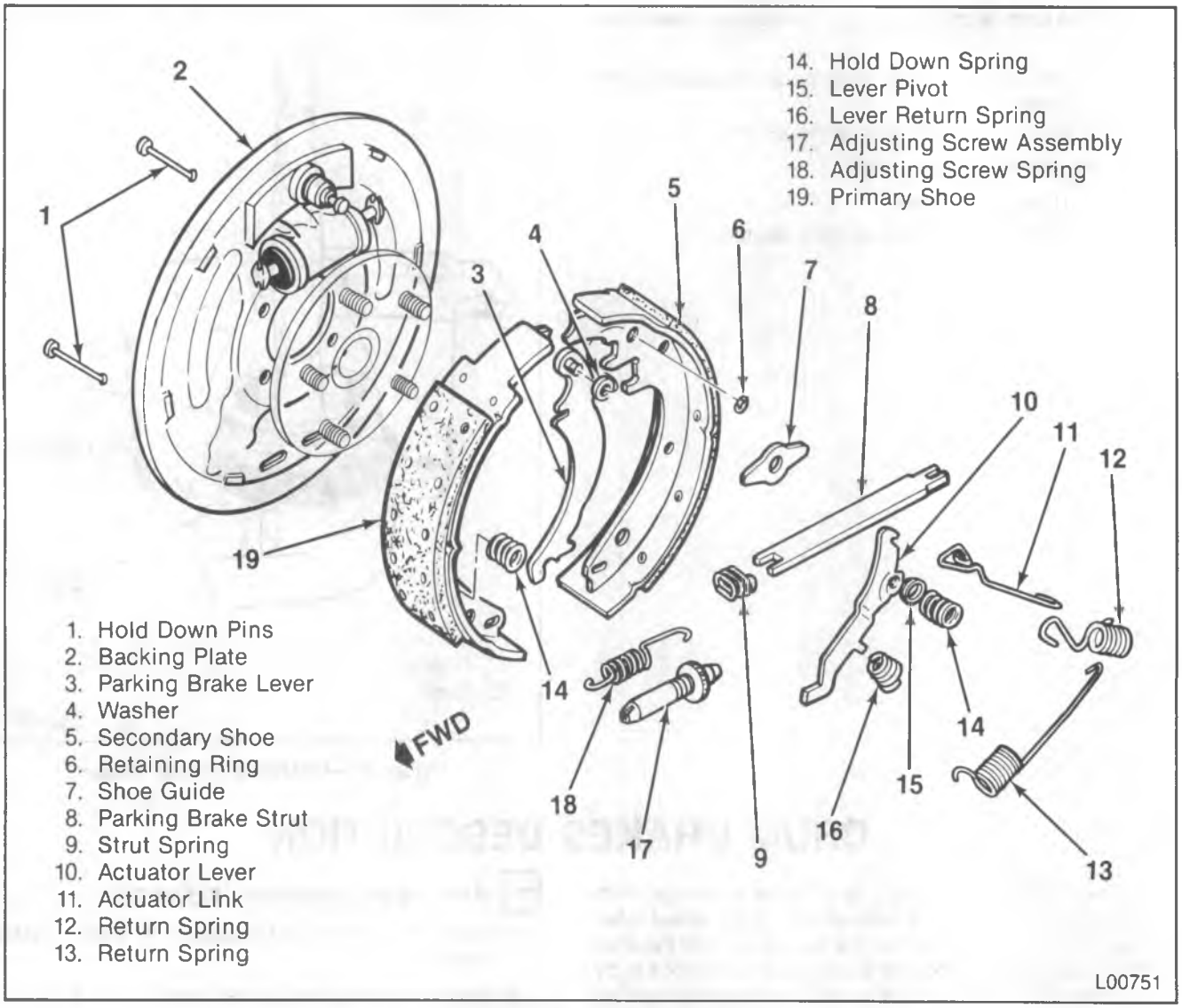

Figure 22—Drum Brake Components

16. Adjusting screw spring (18).

Important

- Do not interchange right and left adjusting screws.

Inspect

- All parts for discoloration due to heat or stress. Replace if necessary.
- All parts for signs of wear. Replace if necessary.
- Wheel cylinder for signs of leakage. Refer to "Rebuilding The Wheel Cylinder" in this section.
- Brake drum for scoring and machining tolerance. Refer to "Servicing The Brake Drum" in this section.

Install or Connect (Figure 22)

- Lubricate the shoe pads and adjusting screw threads with a thin coat of white lithium grease.

1. Adjusting screw (17) and adjusting screw spring (18) to both shoes (5 and 19).
   - The coils of the spring must not touch the adjusting screw.
2. Shoe assembly.
3. Parking brake lever (3) and washer (4) into the shoe.
4. Retaining ring (6).
5. Strut spring (9) onto the parking brake strut (8).
6. Parking brake strut (8).
7. Actuator lever (10) and lever pivot (15).
8. Actuator link (11).
9. Lever return spring (16).
10. Hold-down pins (1).
11. Hold-down springs (14).
12. Return springs (12 and 13).
13. Drum.
    - Align the marks made during disassembly.
14. Wheel and tire assembly. Refer to WHEELS AND TIRES (SEC. 3E).
    - Align the marks made during disassembly.

- Adjust the brakes. Refer to "Brake Adjustment" in this section.

SERVICING THE BRAKE DRUM

Whenever the brake drums are removed, they should be thoroughly cleaned and inspected for cracks, scores, deep grooves and out-of-round.

CRACKED, SCORED OR GROOVED DRUM

A cracked drum is unsafe for further service and must be replaced. Do not attempt to weld a cracked drum.

Smooth up any slight scoring. Heavy or extensive scoring will cause excessive brake lining wear. It will probably be necessary to machine the drum braking surface.

If the brake linings are slightly worn and the drum is grooved, the drum should be polished with fine emery cloth but should not be machined. At this stage, eliminating all the grooves in the drum and smoothing the ridges on the lining would require the removal of too much metal and lining. If left alone, the grooves and ridges match and satisfactory service can be obtained.

If brake linings are to be replaced, a grooved drum should be machined. A grooved drum, if used with a new lining, will not only wear the lining but will make it difficult, if not impossible, to obtain efficient brake performance.

OUT-OF-ROUND OR TAPERED DRUM

An out-of-round drum makes accurate brake shoe adjustment impossible and is likely to cause excessive wear of other parts of the brake mechanism due to its eccentric action. An out-of-round drum can also cause severe and irregular tire tread wear as well as a pulsing brake pedal. When the braking surface of a brake drum exceeds the specification limits in taper and/or out-of-round, the drum should be machined. Out-of-round as well as taper and wear can be accurately measured with an inside micrometer fitted with proper extension rods.

When measuring a drum for out-of-round, taper and wear, take measurements at the open and closed edges of the machined surface and at right angles to each other.

MACHINING THE DRUM

If a drum is to be machined, only enough metal should be removed to obtain a true, smooth braking surface. If a drum does not clean up when machined to a maximum diameter, it must be replaced. Removal of more metal will affect dissipation of heat and may cause distortion of the drum.

All brake drums have maximum diameter cast into them. This diameter is the maximum wear diameter. Do not machine a brake drum that will not meet the specification. Refer to "Specifications" in this section for maximum drum diameter dimensions.

BRAKE ADJUSTMENT

A manual adjustment of the rear brakes is required after the rear linings have been replaced. The front disc brakes require no adjustment.

CAUTION: See "Caution" on page 5A2-1 of this section.

1. Remove the lanced area in the brake backing plate.
   - The metal lanced area must be removed from the brake assembly.

Adjust

- Brake adjusting screw until the wheel can just be turned by hand.
- The brake drag should be equal at both wheels.
- Back off the adjusting screw 33 notches.

Important

- Brakes should have no drag after the screw has been backed off about 15 notches. If a heavy drag is present refer to "Parking Brake Adjustment" in PARKING BRAKES (SEC. 5C).

2. Install an adjusting hole cover in the brake backing plate where the lanced area was removed.
3. Check parking brake adjustment.

WHEEL CYLINDER REPLACEMENT

Remove or Disconnect (Figure 23)

CAUTION: See "Caution" on page 5A2-1 in this section.

1. Brake linings. Refer to "Brake Lining Replacement" in this section.
2. Brake pipe.
3. Bolts (56).
4. Wheel cylinder (57).

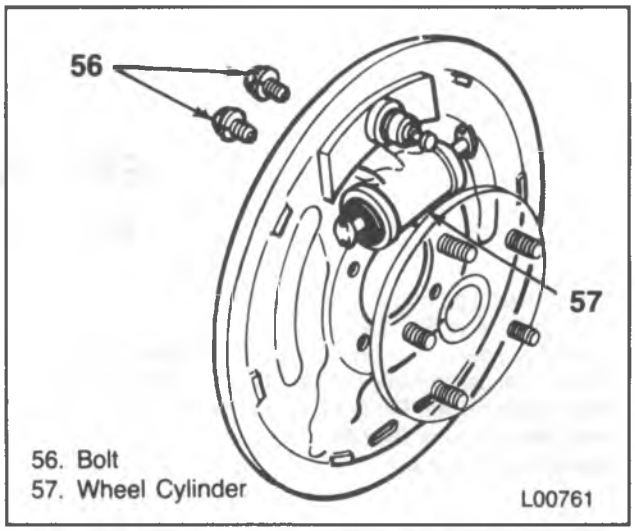

Figure 23—Removing/Installing Wheel Cylinder

Install or Connect (Figure 23)

1. Wheel cylinder (57).

NOTICE: See "Notice" on page 5A2-1 of this section.

2. Bolts (56)

Tighten

- Bolts to "Specifications" at the end of this section.

3. Brake pipe.
4. Brake linings. Refer to "Brake Lining Replacement" in this section.
5. Bleed brake system. Refer to HYDRAULIC BRAKES (SEC. 5A).

REBUILDING THE WHEEL CYLINDER

Remove or Disconnect (Figure 24)

1. Boots (54).
2. Pistons (53).
3. Seals (52).
4. Spring assembly (55).

Inspect

- Cylinder bore for scoring and corrosion.
- Spring assembly for signs of discoloration due to heat. Replace if necessary.

Clean

- Inside the cylinder bore with crocus cloth. If the bore is still scored, replace the cylinder.
- Cylinder with clean brake fluid.

Install or Connect (Figure 24)

- Lubricate seals and cylinder bore with clean brake fluid.

1. Spring assembly (55).
2. Seals (52).
3. Pistons (53).
4. Boots (54).

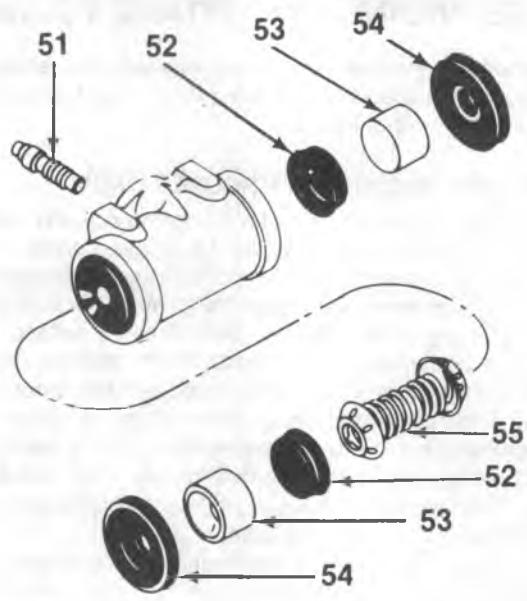

51. Bleeder Valve
52. Seal
53. Piston
54. Boot
55. Spring Assembly

B-07793

Figure 24—Wheel Cylinder Components

SPECIFICATIONS

FASTENER TORQUE

	N·m	Ft. Lbs.
Caliper Mounting Bolt	48	35
Support Plate to Knuckle	16	10
Wheel Cylinder to Flange Plate Bolt (All Except JB5, JB6, JB7 and JB8)	5.5	4
Wheel Cylinder to Flange Plate Bolt (JB5, JB6, JB7 and JB8)	20	15
Rear Brake Anchor Pin (All Except JB7 and JB8)	190	140
Rear Brake Anchor Pin (JB7 and JB8)	312	230
Brake Bleeder Valves	7	5

GMTB-0863-2M

DRUM DIAMETERS

Original	Maximum Refinish	Replacement (Discard)
11.000	11.060	11.090
11.150	11.210	11.240
12.000	12.060	12.090
13.000	13.060	13.090

GMTB-4103-A

ROTOR THICKNESS

Minimum After Refinishing	Replacement (Discard)
1.480	1.465
1.230	1.215
0.980	0.965

GMTB-4104-A

SPECIFICATIONS (CONT.)

BRAKE SYSTEMS

System	Front Brakes	Rear Brakes	Brake Assist
GASOLINE ENGINE VEHICLES			
JB5 Low Drag	Disc 11.86x1.29	Drum 11.15x2.75	Vacuum—Dual Diaphragm
JB6 Low Drag	Disc 12.50x1.28	Drum 11.15x2.75	Vacuum—Dual Diaphragm
JB7 Conventional	Disc 12.50x1.28	Drum 13.00x2.50	Vacuum—Dual Diaphragm
JB8 Conventional	Disc 12.50x1.54	Drum 13.00x3.50	Hyraulic—Hydro-Boost
JB9 Conventional	Disc 14.25x1.54	Disc 13.75x1.54	Hyraulic—Hydro-Boost
DIESEL ENGINE VEHICLES			
JD3 Low Drag	Disc 11.86x1.29	Drum 11.00x2.00	Hyraulic—Hydro-Boost
JD5 Low Drag	Disc 11.86x1.29	Drum 11.15x2.75	Hyraulic—Hydro-Boost
JD6 Conventional	Disc 12.50x1.28	Drum 11.15x2.75	Hyraulic—Hydro-Boost
JD7 Conventional	Disc 12.50x1.28	Drum 13.00x2.50	Hyraulic—Hydro-Boost

TB-3063-2A

SPECIAL TOOLS

1

J 24548

2

3

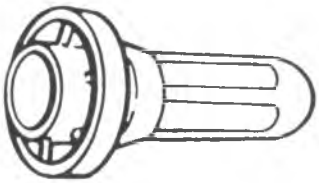

J 28735-A

1. Piston Seal Compressor
2. Dial Indicator
3. Piston Seal Installer

V0218

SECTION 5A3

REAR WHEEL ANTILOCK BRAKE SYSTEM

NOTICE: When fasteners are removed, always reinstall them at the same location from which they were removed. If a fastener needs to be replaced, use the correct part number fastener for that application. If the correct part number fastener is not available, a fastener of equal size and strength (or stronger) may be used. Fasteners that are not reused, and those requiring thread locking compound will be called out. The correct torque value must be used when installing fasteners that require it. If the above conditions are not followed, parts or system damage could result.

CONTENTS

SUBJECT	PAGE
Description	5A3- 2
Trouble Code Identification	5A3- 3
Clearing Trouble Codes	5A3- 3
Diagnosis	5A3- 4
Wiring Diagram (R/V)	5A3- 4
Diagnostic Circuit Check	5A3- 5
Code 2 - Open Isolation Valve or Faulty ECU	5A3-11
Code 3 - Open Dump Valve or Faulty ECU	5A3-12
Code 4 - Grounded Antilock Valve Switch	5A3-13
Code 5 - Excessive Actuations of the Dump Valve During an Antilock Stop	5A3-14
Code 6 - Erratic Speed Sensor	5A3-15
Code 7 - Shorted Isolation Valve or Faulty ECU	5A3-16
Code 8 - Shorted Dump Valve or Faulty ECU	5A3-17
Code 9 - Open Circuit to the Speed Signal	5A3-18
Code 10 - Brake Lamp Switch Circuit	5A3-19
Code 1, 11, and 12 - Electronic Control Unit Malfunction	5A3-20
Codes 13, 14, and 15 - Electronic Control Unit Malfunction	5A3-21
On-Vehicle Service	5A3-22
RWAL Electronic Control Unit	5A3-22
Isolation/Dump Valve	5A3-22
Speedometer Calibration	5A3-23
Speed Sensor	5A3-23
Wiring and Connector Repair	5A3-24
Circuit Maintenance and Repair	5A3-24
Weather-Pack Connectors	5A3-25
Metri-Pack Connectors	5A3-25
Wiring Repair	5A3-25
Specifications	5A3-27
Special Tools	5A3-28

DESCRIPTION

This section deals with the complete diagnosis and services for vehicles equipped with rear wheel antilock. For service information regarding all other components of the brake system refer to HYDRAULIC BRAKES (SEC. 5A), HYDRAULIC BRAKE BOOSTER SYSTEM (SEC. 5A1), or HYDRAULIC FOUNDATION BRAKES (SEC. 5A2).

The Rear Wheel Antilock System (RWAL) (figure 1) is designed to reduce the occurrence of of rear wheel lock-up during a severe brake application. The system functions by regulating the rear hydraulic brake line pressure. The pressure regulation is accomplished by a control valve which is located near the combination valve master cylinder. The control valve is made up of two valves, a dump valve which releases pressure into an accumulator, and an isolation valve which maintains rear brake pressure. The valve is controlled by a microcomputer which is part of the Electronic Control Unit (ECU). The ECU is mounted next to the master cylinder. In a severe brake application as pressure is applied to the brake pedal the ECU will permit the valve to do one of three functions, or a combination of all three. The ECU will allow the valve to either maintain the same amount of hydraulic pressure, release hydraulic pressure through the dump valve into the accumulator, or increase the pressure by pulsing the isolation valve.

The ECU operates by receiving signals from the speed sensor which is located in the transmission, and the brake lamp switch. The speed sensor sends its signal to the digital ratio adapter. If the axle ratio or tire size is changed, it will be necessary to replace the digital ratio adapter, refer to "Speedometer Calibration" in this section.

The RWAL system is connected to the existing brake warning lamp located on the dash. An indication of RWAL operation and a bulb check is performed each time the ignition is turned "on," the warning lamp will remain on for about two seconds. A RWAL system malfunction is indicated by a brake warning lamp. To determine the specific trouble, refer to "Diagnostic Circuit Check" in this section.

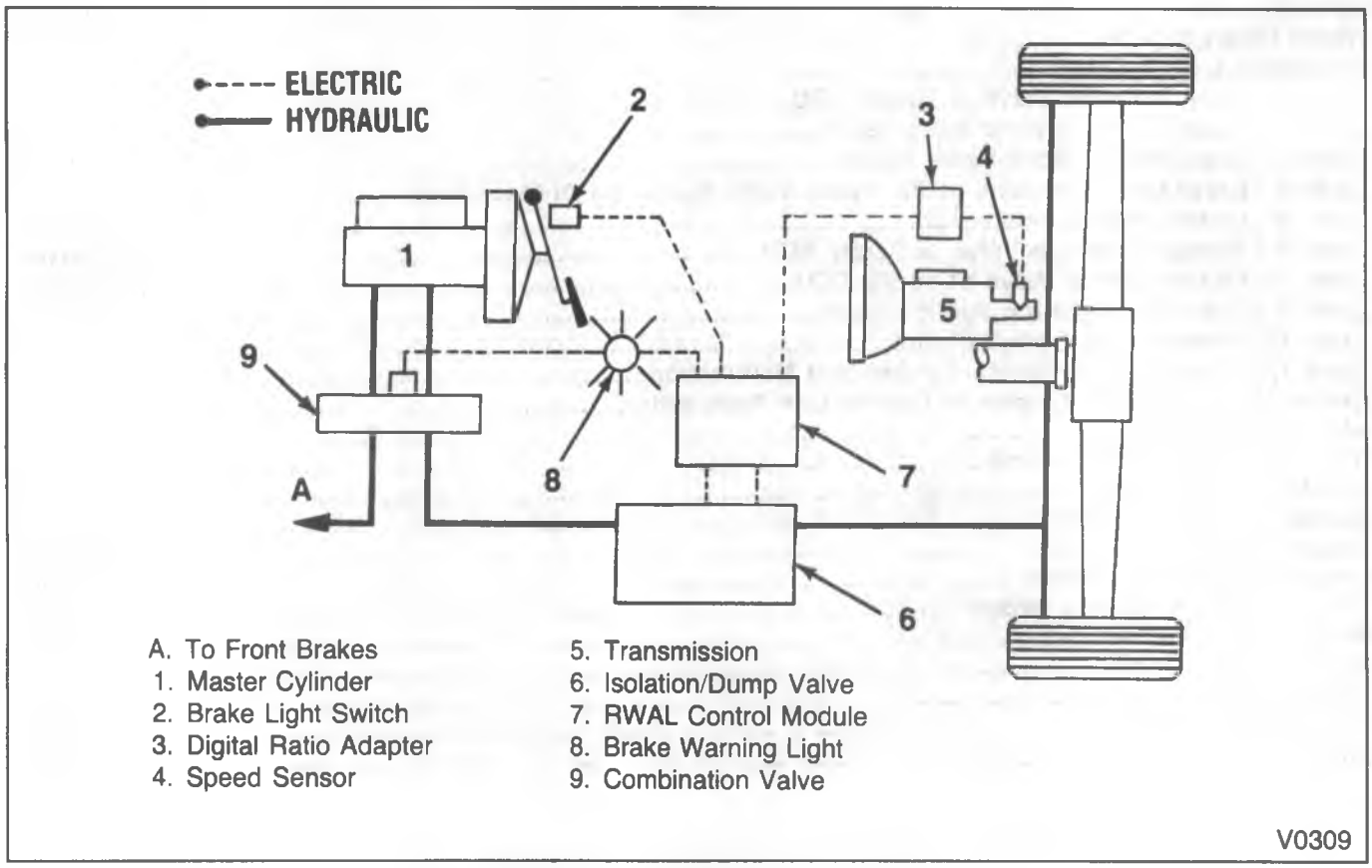

Figure 1 – Rear Wheel Antilock Brake System

TROUBLE CODE IDENTIFICATION

Trouble codes can be read with the Tech 1 scanner, or by jumping terminals "A" to "H" of the ALDL and observing the number of flashes produced by the "BRAKE" warning light located in the instrument cluster. To access the trouble codes, follow steps 1 through 5.

1. Turn ignition to "RUN" position.
2. Install jumper wire between ALDL terminal "A" and "H" ("A" being ground).
3. Wait 20 seconds.
4. Count how many times the "BRAKE" light flashes on and off (including the first long flash and the following short flashes in the count).
5. Remove jumper wire from ALDL.

CLEARING TROUBLE CODES

If the "BRAKE" warning light is staying lit, the codes may be cleared with the Tech 1 scanner or by following these steps:

1. Turn ignition key to the "RUN" position.
2. Use a jumper wire to ground terminals "H" to "A" of the ALDL for 2 seconds.
3. Remove the jumper for 1 second.
4. Repeat the ground procedure (step 2) for 2 seconds.

   An indication that you have successfully cleared the trouble codes, is when the "BRAKE" warning light goes off, comes on, then goes off again.

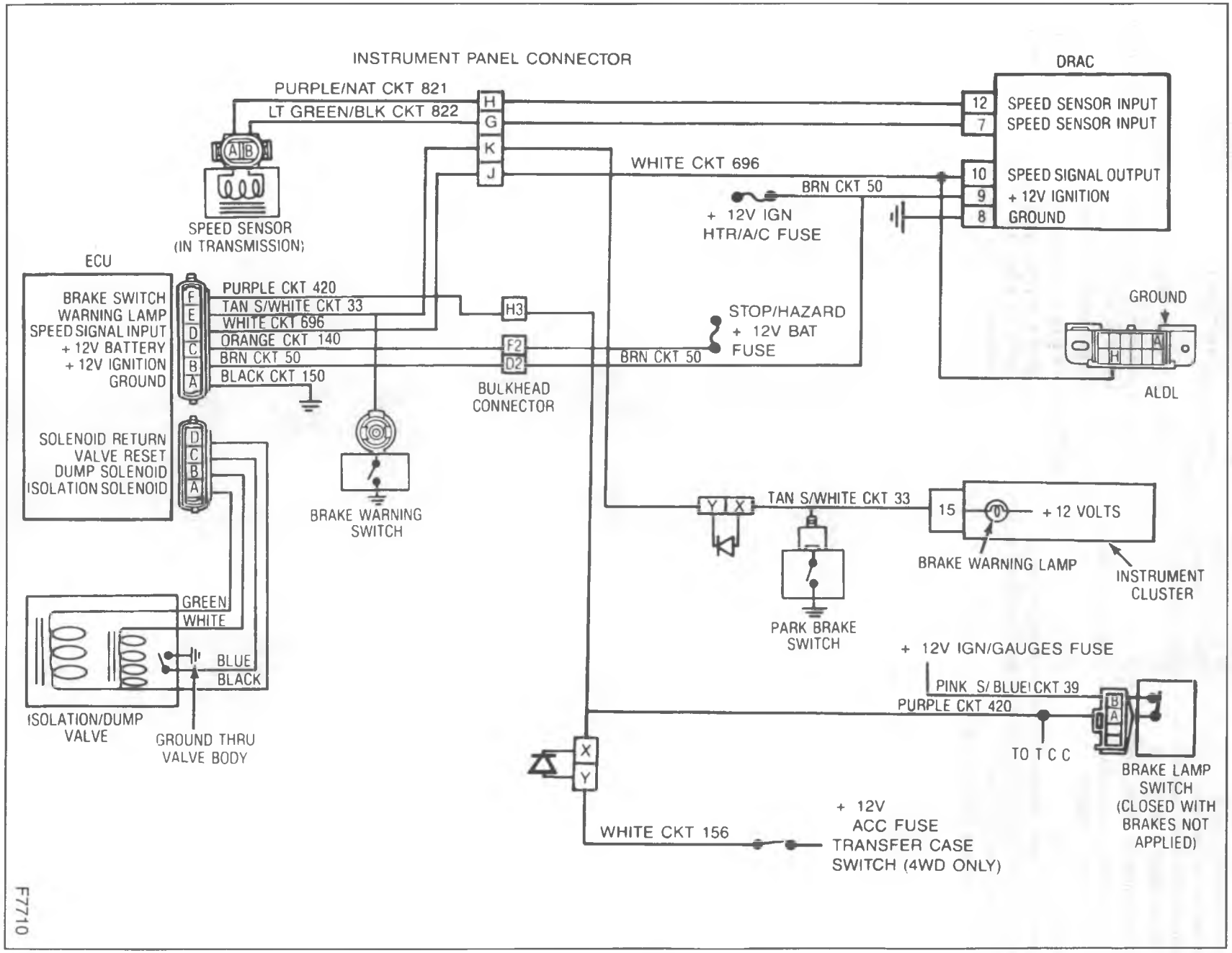

Figure 2 – Rear Wheel Antilock Wiring Diagram – R/V

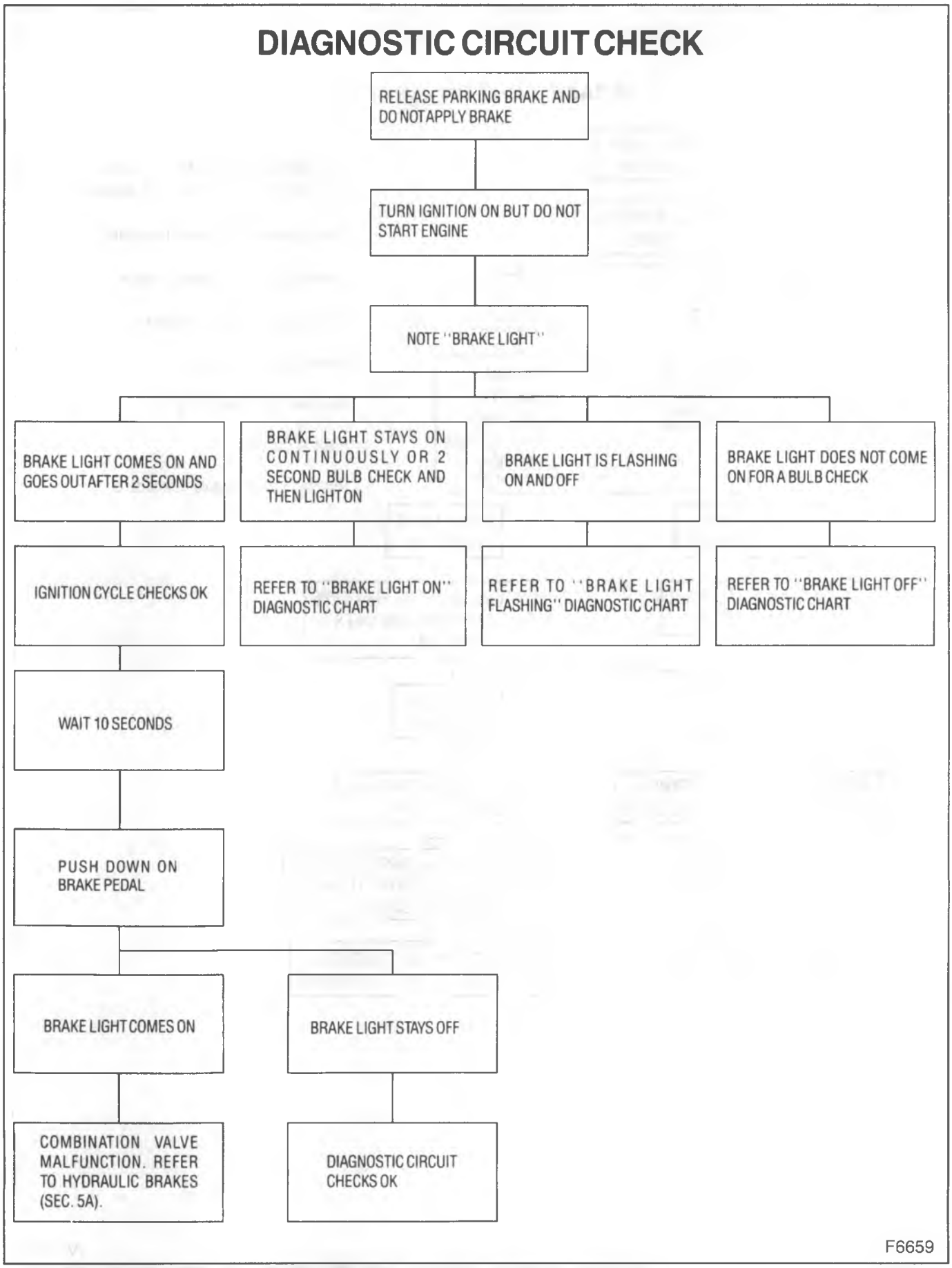

Figure 3—Diagnostic Circuit Check

BRAKE LIGHT ON — PART 1

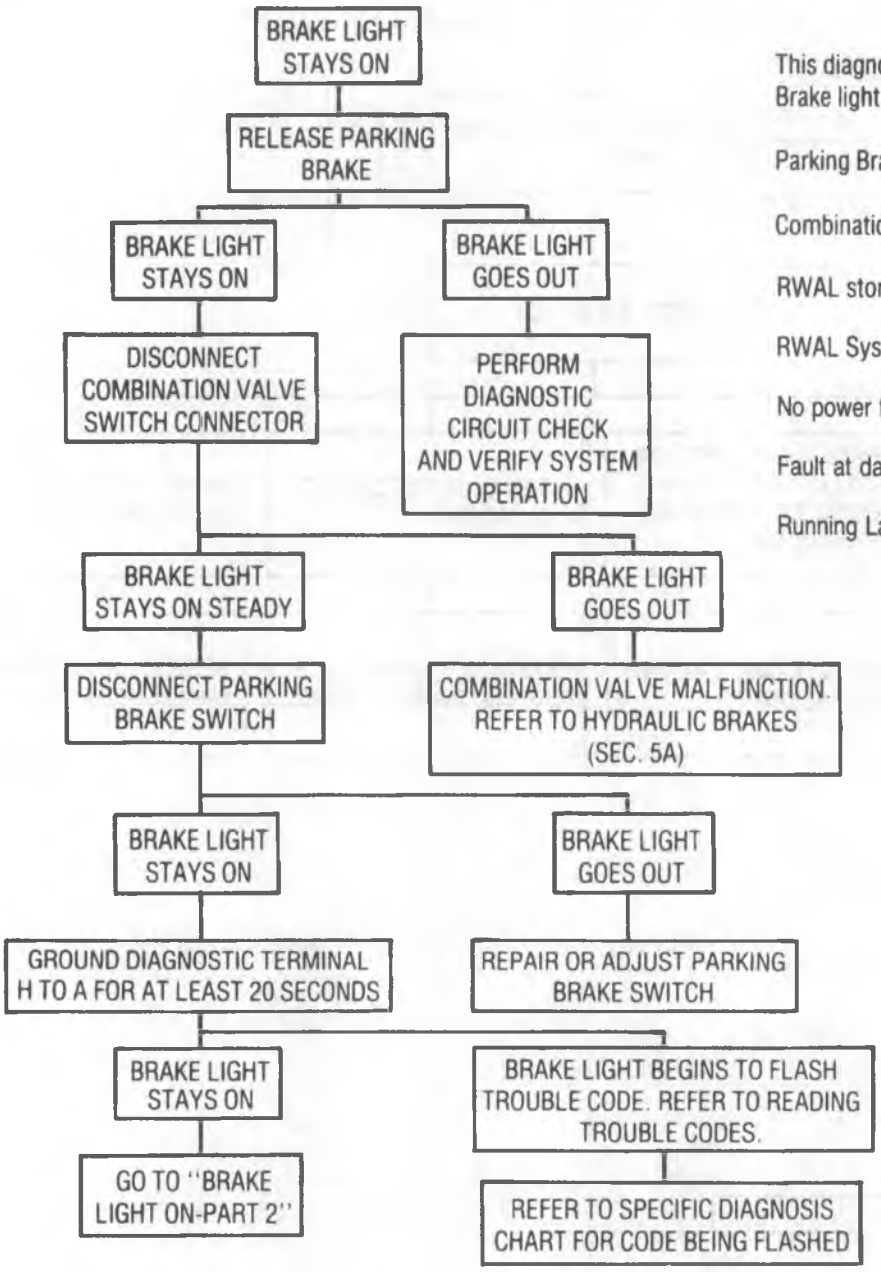

This diagnostic chart checks for the Brake light on for the following causes —

Parking Brake on or switch problem

Combination Valve Switch closed

RWAL stored diagnostic code

RWAL System problem

No power to RWAL ECU

Fault at daytime

Running Lamp Module (Canada only)

V0322

Figure 4 – Diagnostic Circuit Check

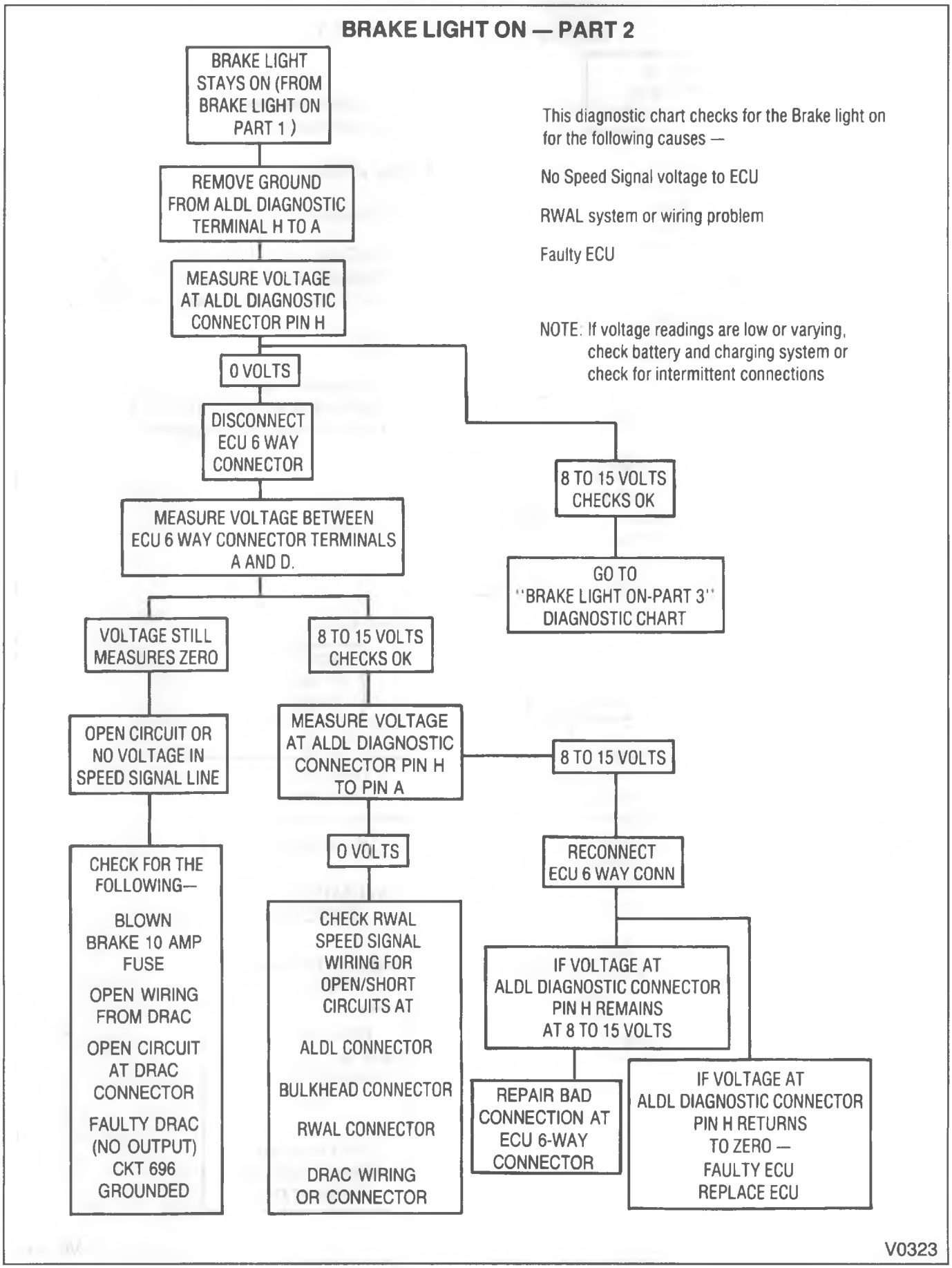

Figure 5 – Diagnostic Circuit Check

BRAKE LIGHT ON — PART 3

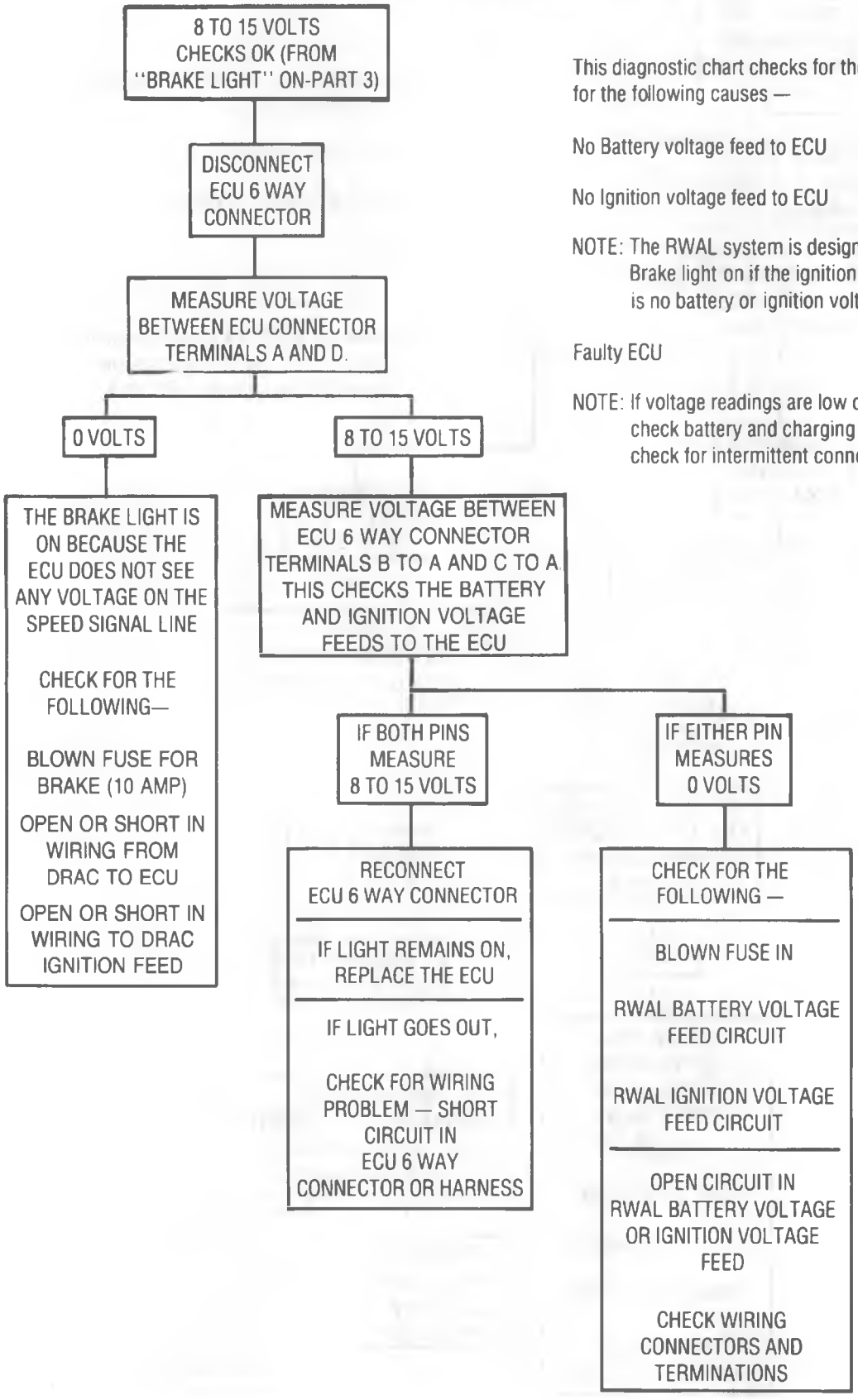

This diagnostic chart checks for the Brake light on for the following causes —

No Battery voltage feed to ECU

No Ignition voltage feed to ECU

NOTE: The RWAL system is designed to turn the Brake light on if the ignition is on and there is no battery or ignition voltage feed to the ECU.

Faulty ECU

NOTE: If voltage readings are low or varying, check battery and charging system or check for intermittent connections

V0324

Figure 6 – Diagnostic Circuit Check

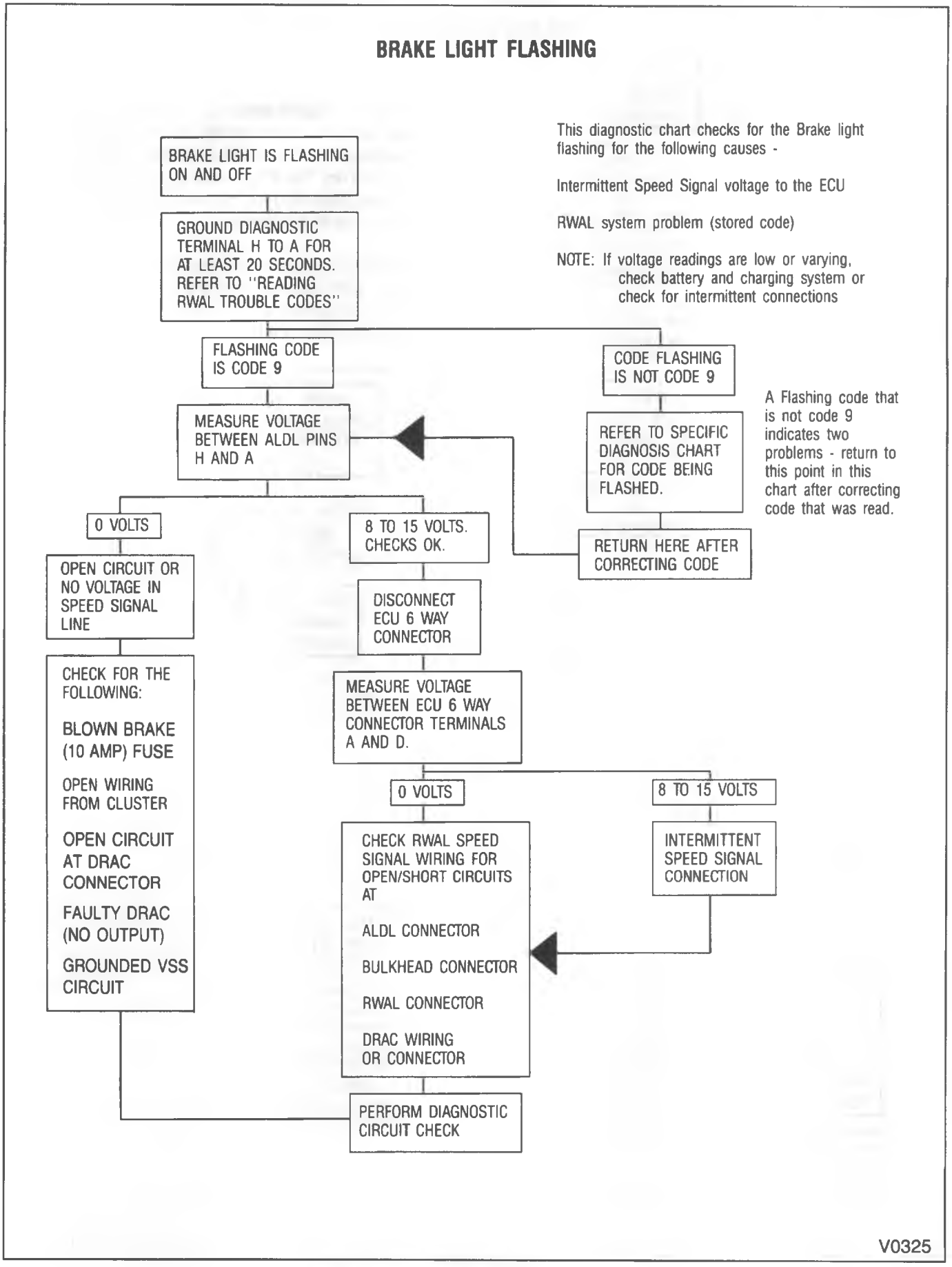

Figure 7—Diagnostic Circuit Check

BRAKE LIGHT OFF

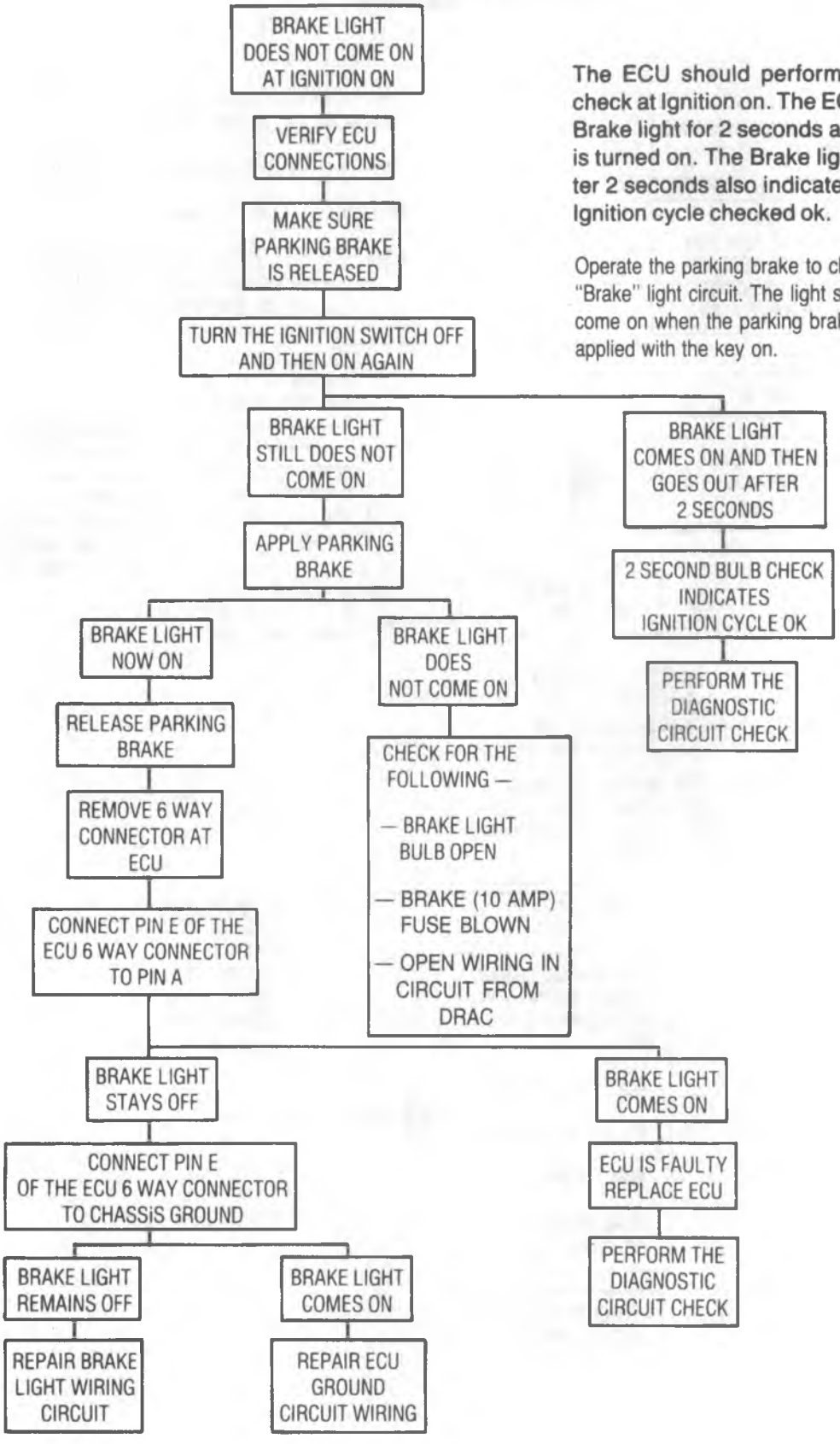

The ECU should perform a Brake light check at Ignition on. The ECU turns on the Brake light for 2 seconds after the ignition is turned on. The Brake light going out after 2 seconds also indicates that the ECU Ignition cycle checked ok.

Operate the parking brake to check the "Brake" light circuit. The light should come on when the parking brake is applied with the key on.

Figure 8 – Diagnostic Circuit Check

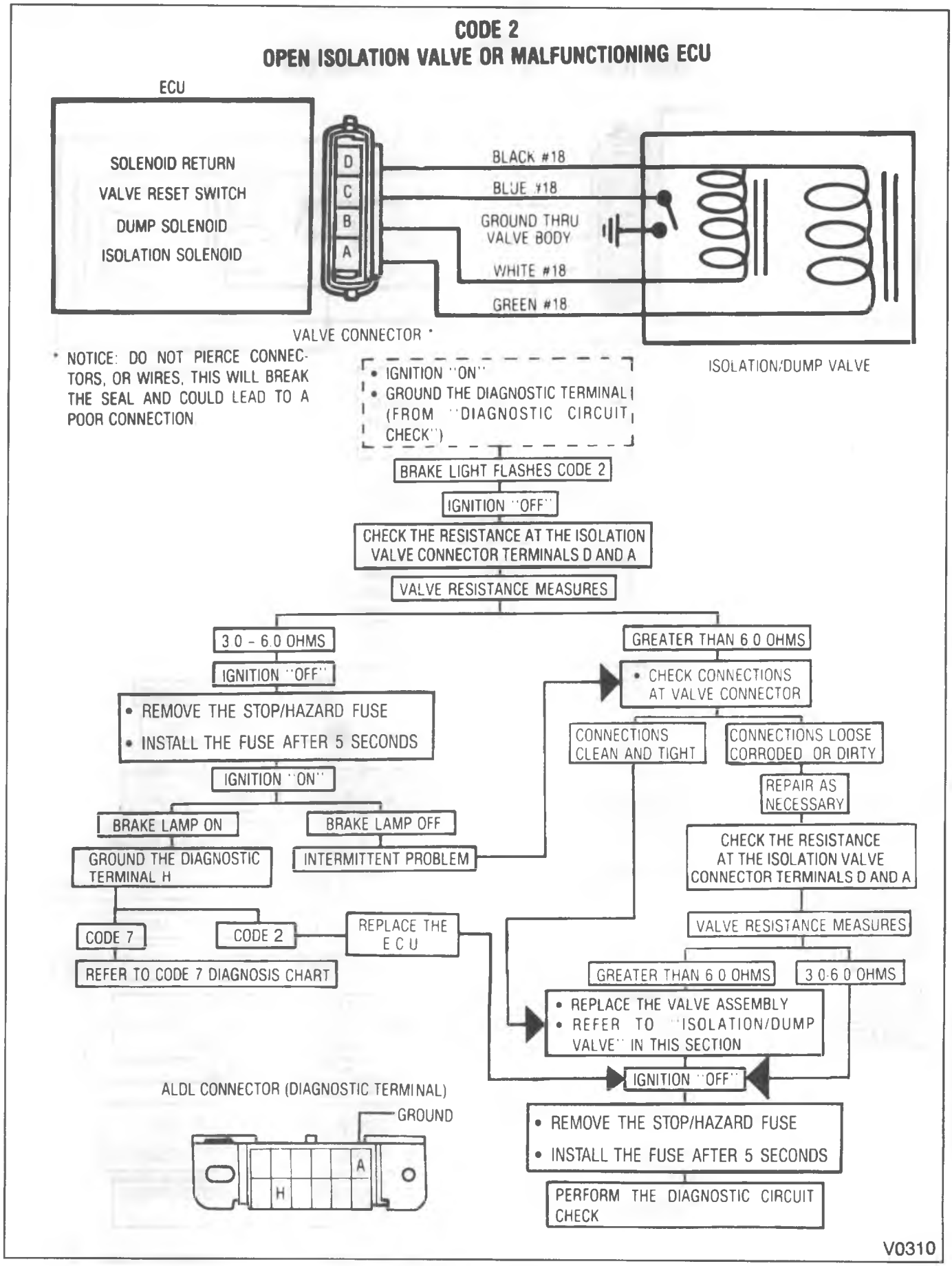

Figure 9—Code 2

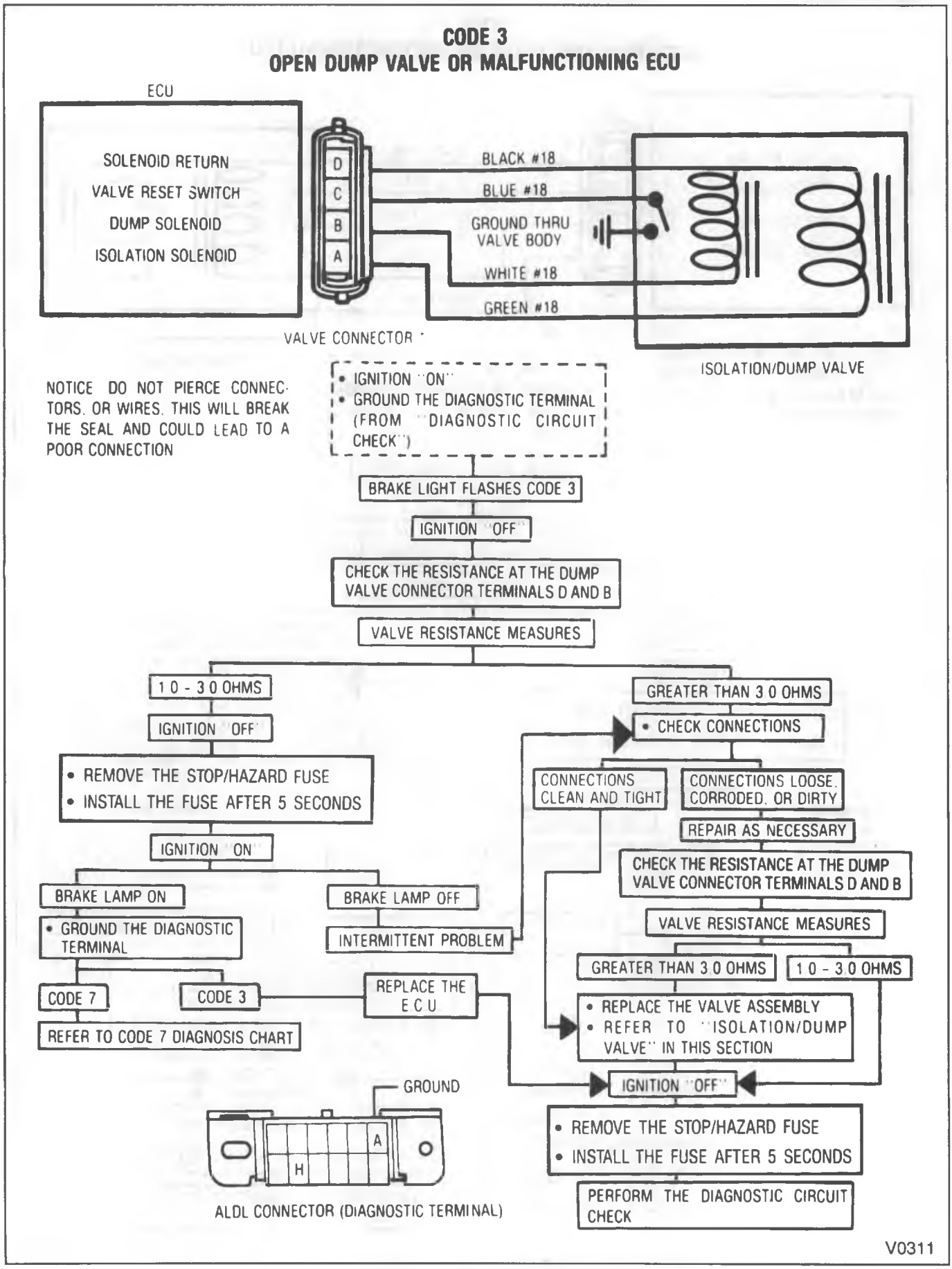

Figure 10—Code 3

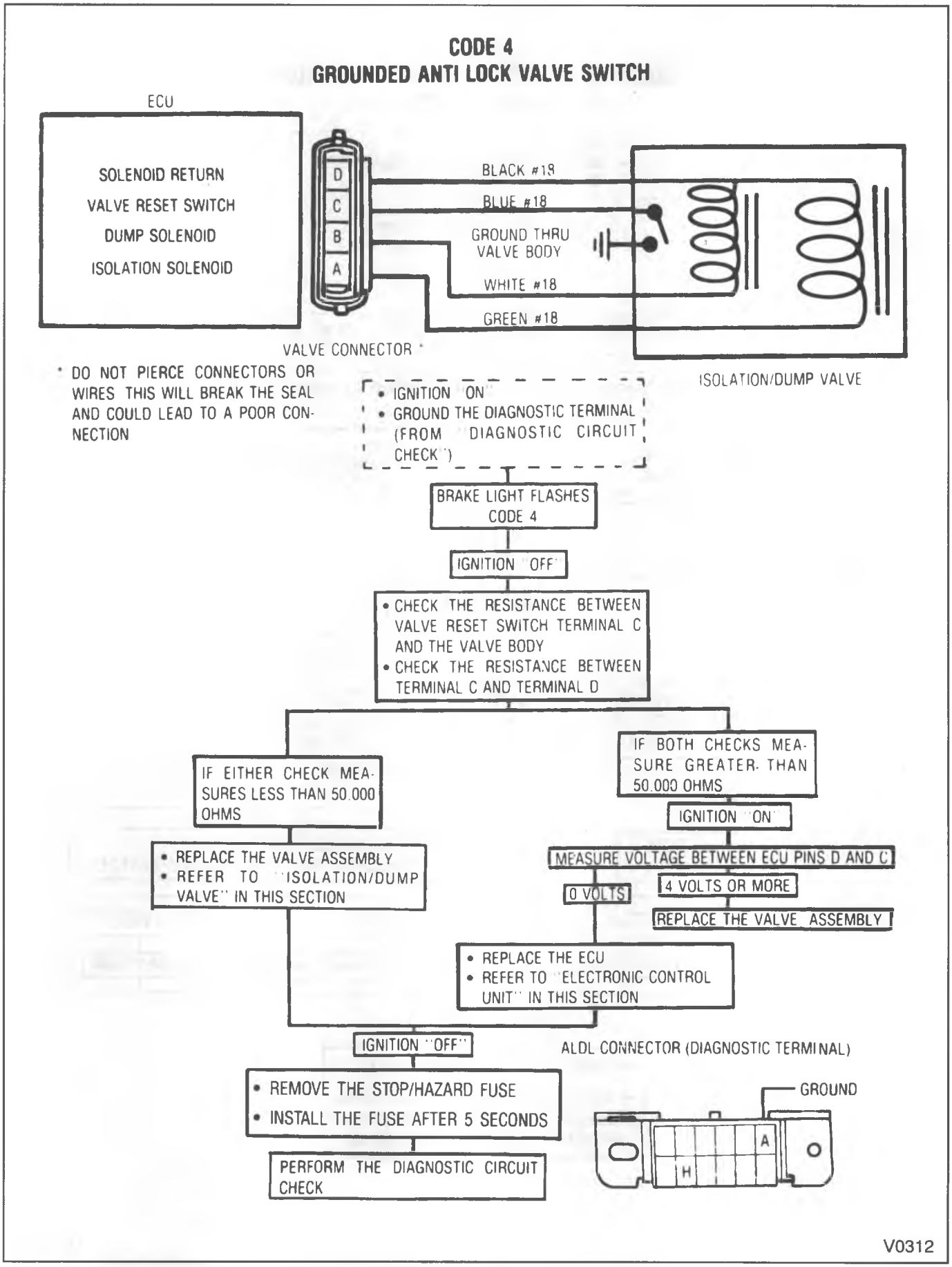

Figure 11—Code 4

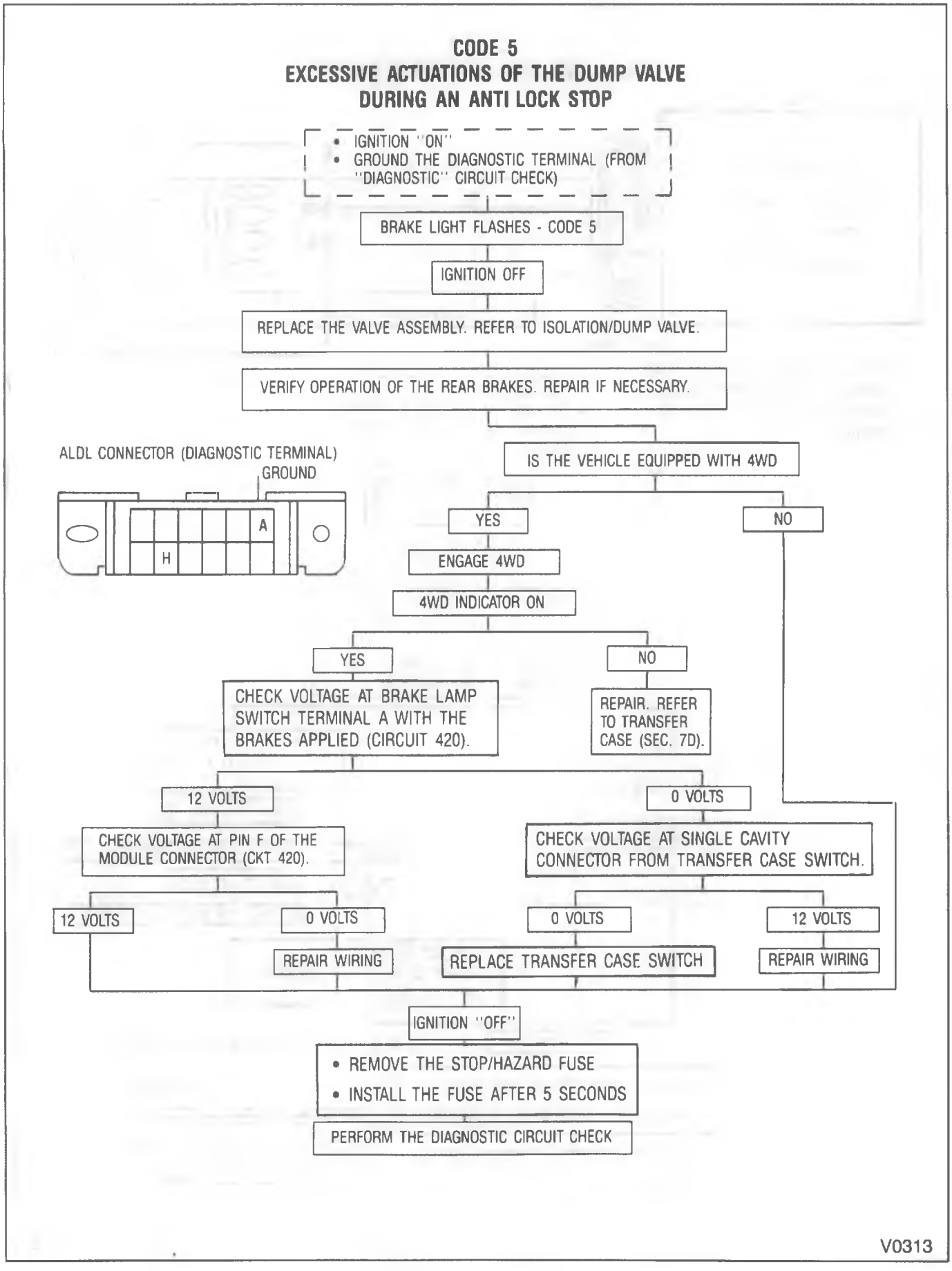

Figure 12—Code 5

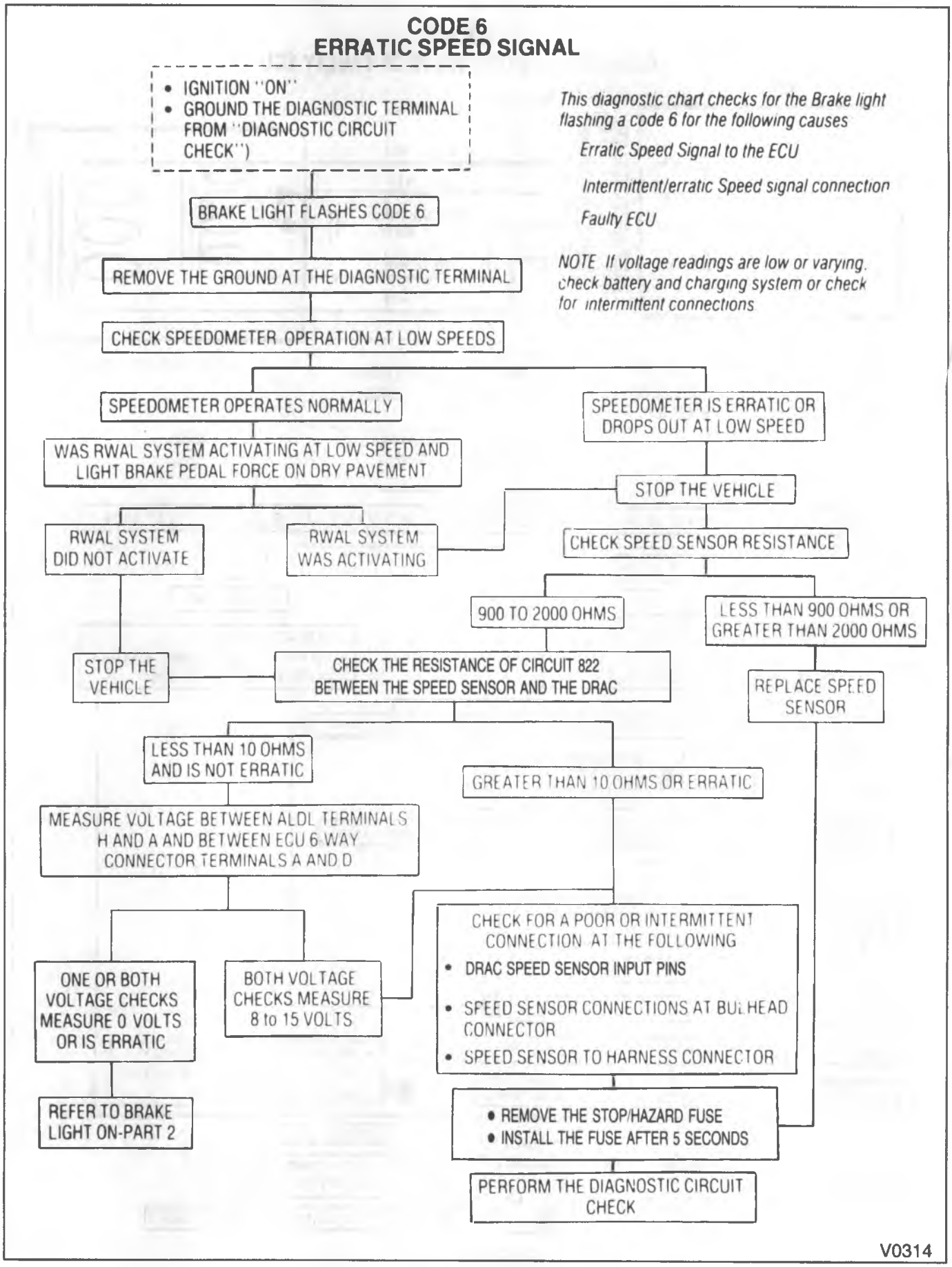

Figure 13—Code 6

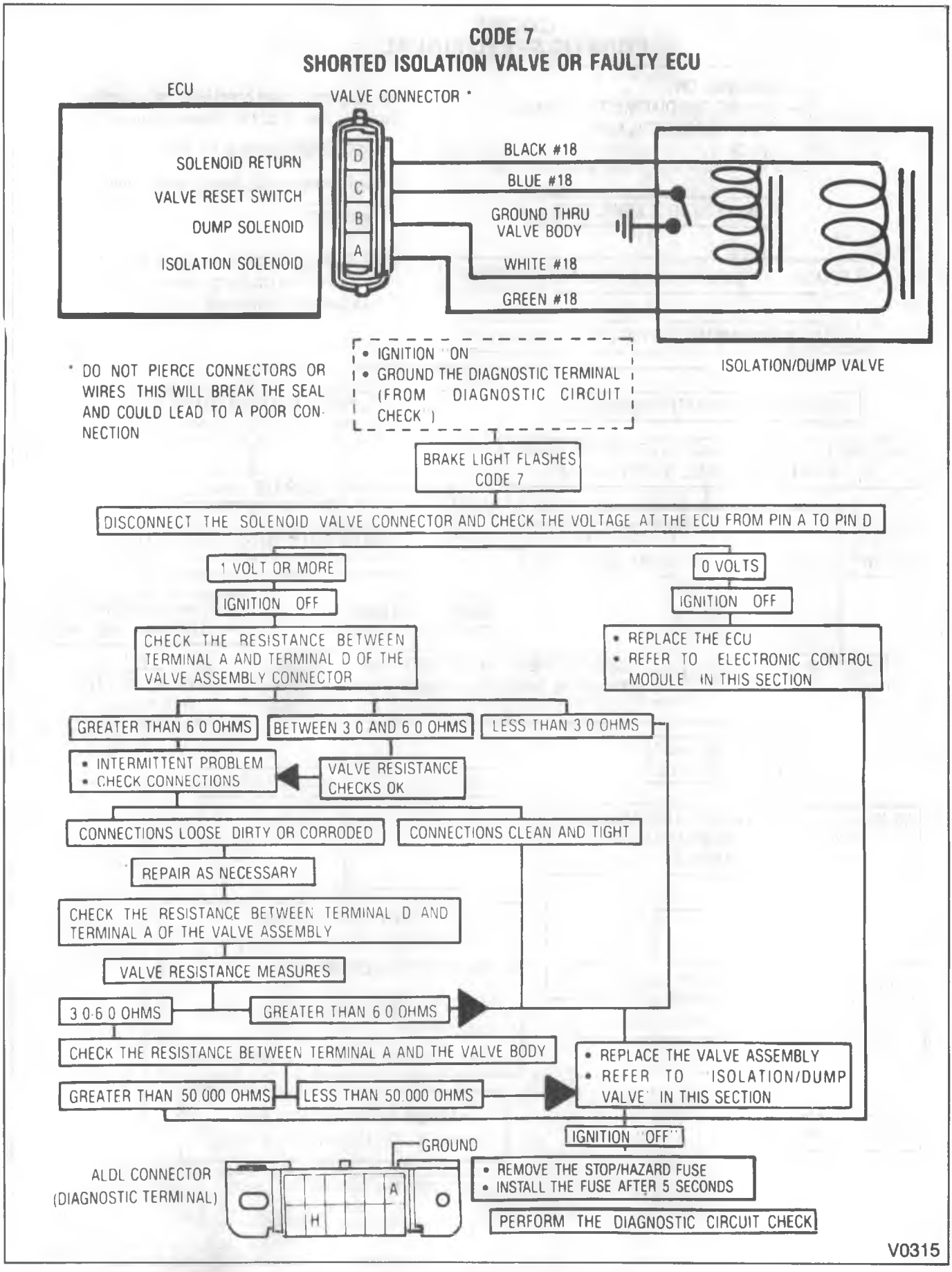

Figure 14—Code 7

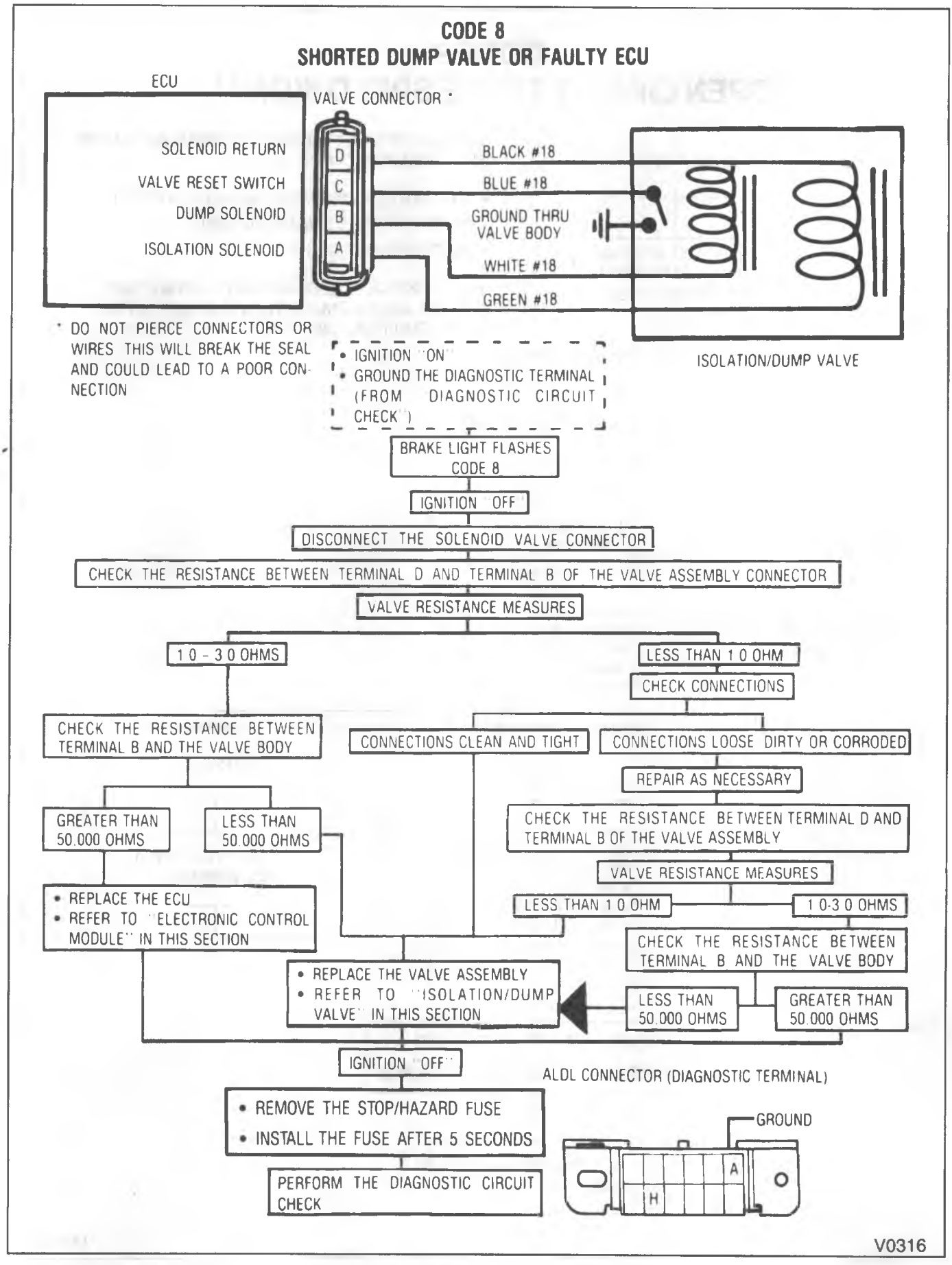

Figure 15—Code 8

CODE 9
OPEN CIRCUIT TO THE SPEED SIGNAL

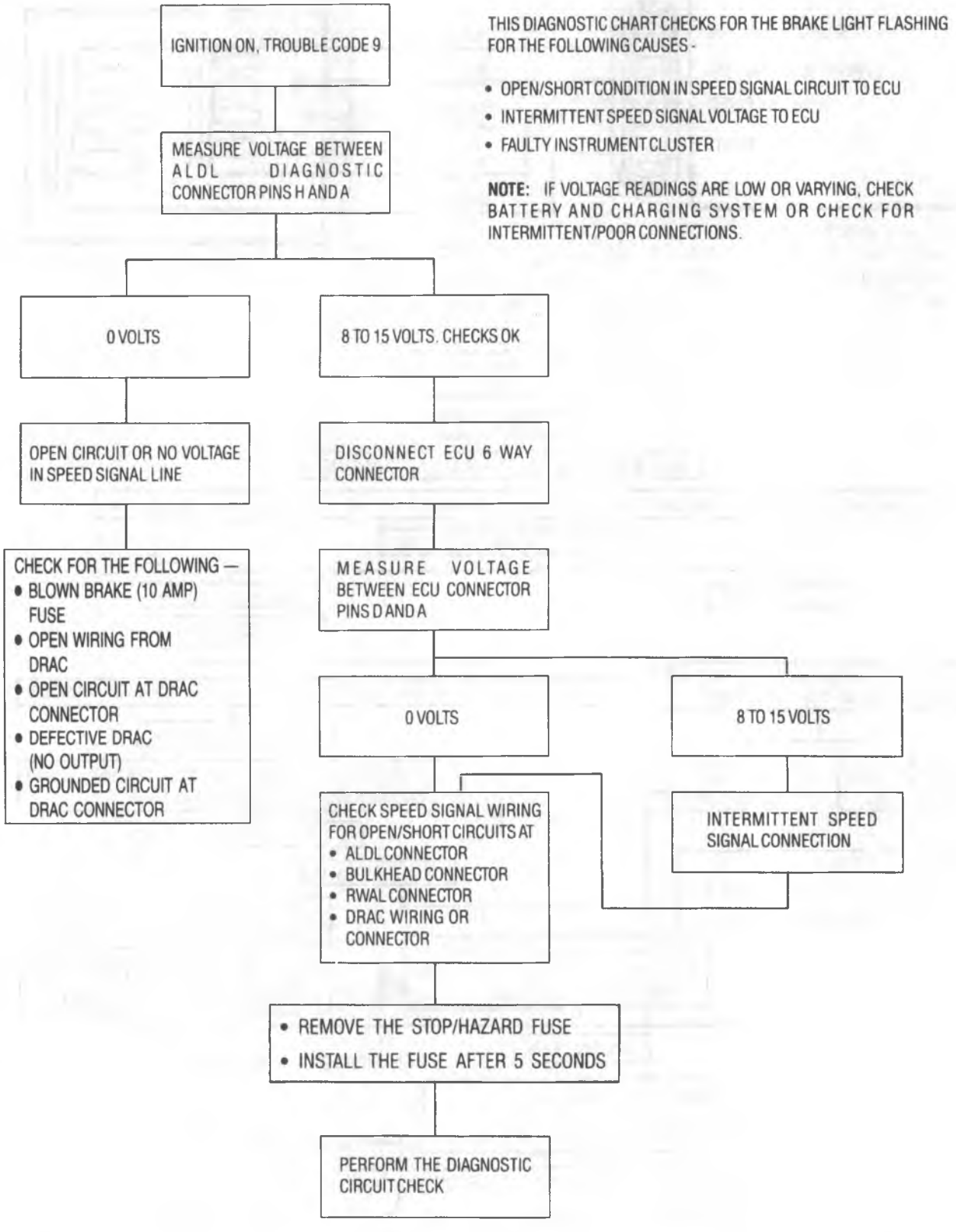

Figure 16—Code 9

CODE 10- BRAKE LAMP SWITCH CIRCUIT*

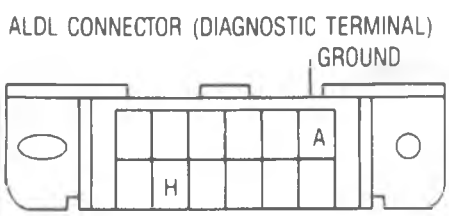

- IGNITION "ON"
- GROUND THE DIAGNOSTIC TERMINAL (FROM "DIAGNOSTIC" CIRCUIT CHECK)

BRAKE LIGHT FLASHERS CODE 10

- CHECK THE VOLTAGE AT THE BRAKE LAMP SWITCH TERMINAL XX
- DO NOT REMOVE THE CONNECTOR

9-16 VOLTS → BRAKES NOT APPLIED → CHECK VOLTAGE AT THE STOP LAMP SWITCH TERMINAL A

- 0 VOLTS → ADJUST OR REPLACE THE STOP LAMP SWITCH.** REFER TO "STOP LAMP SWITCH" IN HYDRAULIC BRAKES (SEC. 5A) → PERFORM THE DIAGNOSTIC CIRCUIT CHECK
- 9-16 VOLTS →
  - DISCONNECT THE 6-WAY CONNECTOR AT THE ECU
  - CHECK THE VOLTAGE AT TERMINAL F CKT 420
  - 9-16 VOLTS → VERIFY SWITCH** ADJUSTMENT AND CONNECTIONS. REFER TO "STOP LAMP SWITCH" IN HYDRAULIC BRAKES (SEC 5A)
    - STOP LAMP SWITCH** NEEDS ADJUSTMENT OR CONNECTIONS NEED REPAIR → ADJUST OR REPAIR →
      - IGNITION OFF
      - PERFORM DIAGNOSTIC CIRCUIT CHECK
      - RUN VEHICLE ABOVE 45 MPH FOR 5 MINUTES
      - BRAKE WARNING LIGHT "ON"?
        - NO → GO TO DIAGNOSTICS FOR THAT CODE
        - YES → GROUND ALDL DIAGNOSTIC TERMINAL H TO A FOR AT LEAST 20 SECONDS
          - BRAKE LIGHT FLASHES A CODE OTHER THAN 10 → GO TO DIAGNOSTICS FOR THAT CODE
          - BRAKE LIGHT FLASHES CODE 10 → REPLACE THE ECU → IGNITION OFF
    - STOP LAMP SWITCH** ADJUSTMENT AND CONNECTIONS OK →
      - IGNITION OFF
      - PERFORM DIAGNOSTIC CIRCUIT CHECK
      - RUN VEHICLE ABOVE 45 MPH FOR 5 MINUTES
      - STOP
      - BRAKE WARNING LIGHT "ON"?
        - YES → GROUND ALDL DIAGNOSTIC TERMINAL H TO A FOR AT LEAST 20 SECONDS
        - NO → INTERMITTENT PROBLEM → REVERIFY STOP LAMP SWITCH** ADJUSTMENT AND CONNECTIONS → RUN VEHICLE ABOVE 45 MPH FOR 5 MINUTES → STOP → IGNITION OFF
  - 0 VOLTS → REPAIR WIRING IN CKT 420 → PERFORM THE DIAGNOSTIC CIRCUIT CHECK
- 0 VOLTS → CHECK CIRCUIT 39 FOR
  - BLOWN FUSE
  - OPEN IN WIRING
  - SHORT IN WIRING
  → PERFORM THE DIAGNOSTIC CIRCUIT CHECK

IGNITION OFF

- REMOVE THE STOP/HAZARD FUSE
- INSTALL THE FUSE AFTER 5 SECONDS

PERFORM THE DIAGNOSTIC CIRCUIT CHECK

*NOTE: CODE 10 IS DETECTED WHEN VEHICLE REACHES A SPEED OF 35 MPH OR GREATER

**STOP LAMP SWITCH W/O CRUISE CONTROL, OR VACUUM RELEASE SWITCH WITH CRUISE CONTROL

V0318

Figure 17—Code 10

CODES 1, 11, AND 12
ELECTRONIC CONTROL UNIT MALFUNCTION

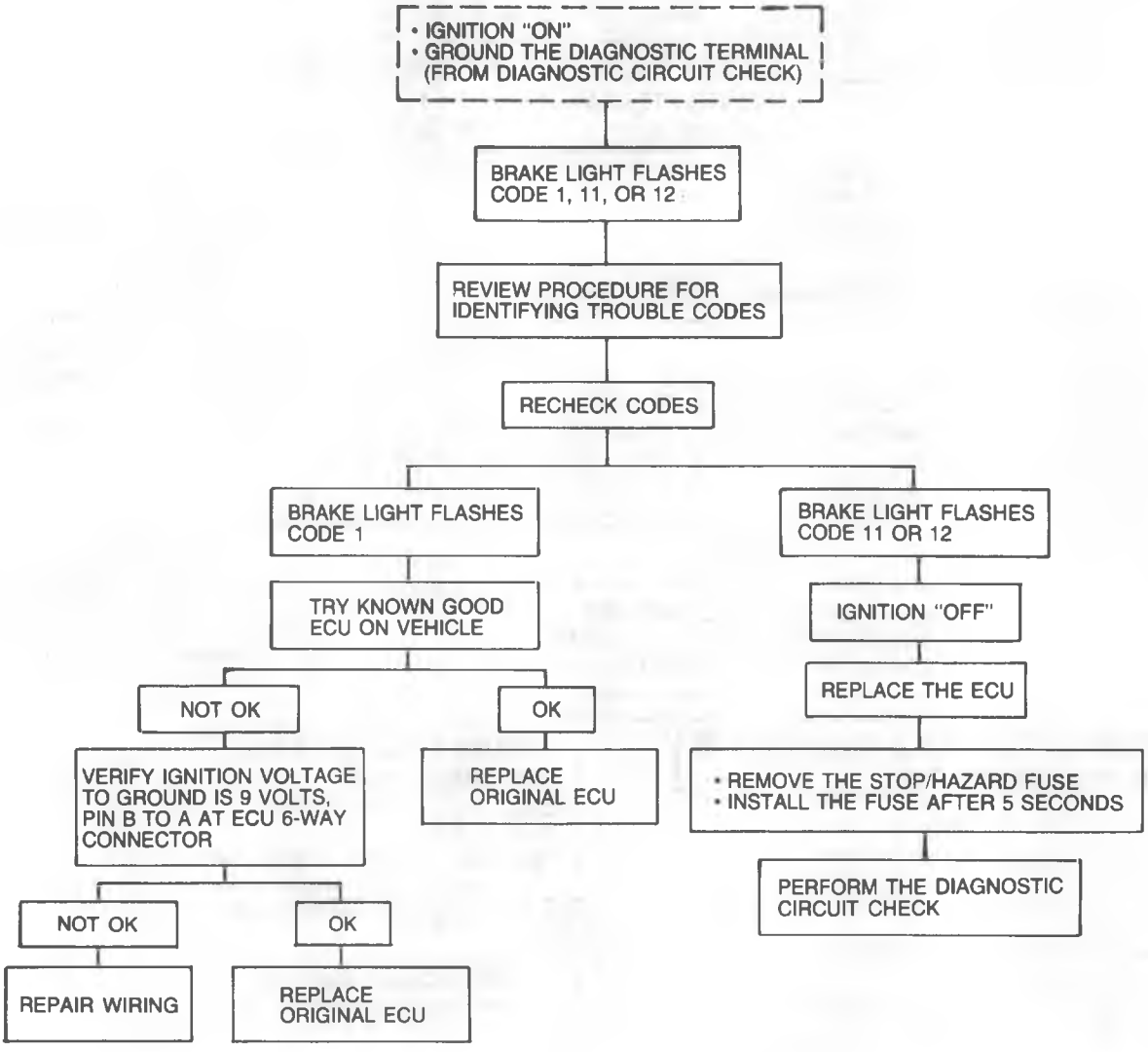

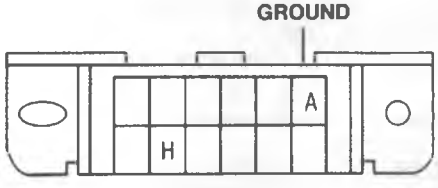

ALDL CONNECTOR (DIAGNOSTIC TERMINAL)

V0319

Figure 18—Code 1, 11, or 12

CODES 13, 14 AND 15
ELECTRONIC CONTROL UNIT MALFUNCTION

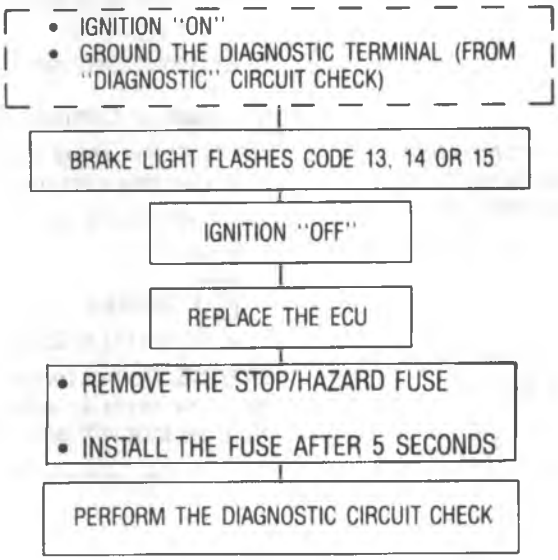

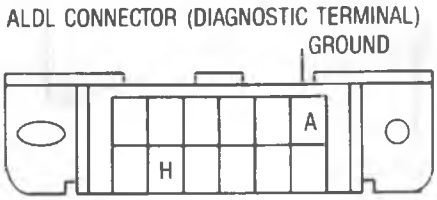

V0320

Figure 19—Code 13, 14, or 15

ON-VEHICLE SERVICE

RWAL ELECTRONIC CONTROL UNIT

The RWAL Electronic Control Unit is not serviceable. It should be replaced when the diagnosis charts show it to be malfunctioning.

Remove or Disconnect (Figure 20)

NOTICE: Do not touch the electrical connections and pins or allow them to come into contact with brake fluid as this will damage the RWAL ECU.

1. RWAL ECU by prying the tab at the rear of the ECU and pulling it toward the front of the vehicle.
2. Locking tabs from connectors.
3. Electrical connectors.

Install or Connect (Figure 20)

NOTICE: Do not touch the electrical connections and pins or allow them to come into contact with brake fluid as this will damage the RWAL ECU.

1. RWAL ECU by sliding it into the bracket until the tab locks into the hole.
2. Electrical connectors.
   - If there is brake fluid on the connectors, clean them with water followed by Isopropyl alcohol.
3. Locking tabs on connectors.

ISOLATION/DUMP VALVE

The isolation/dump valve is not serviceable. It should be replaced when the diagnosis charts show it to be malfunctioning.

Remove or Disconnect (Figure 20)

1. Brake line fittings.
2. Bolts (11).

NOTICE: Do not touch the electrical connections or allow them to come into contact with brake fluid as this will damage the RWAL ECU.

3. Bottom electrical connector from the RWAL ECU.
   - Do not allow the Isolation/Dump valve to hang by the pigtail.
4. Isolation/Dump valve.

Install or Connect (Figure 20)

NOTICE: For steps 2 and 4 see "Notice" on page 5A3-1 of this section.

1. Isolation/Dump valve.
2. Bolts (11).

Tighten

- Bolts (11) to 29 N•m (21 ft. lbs.).

NOTICE: Do not touch the electrical connections or allow them to come into contact with brake fluid as this will damage the RWAL ECU.

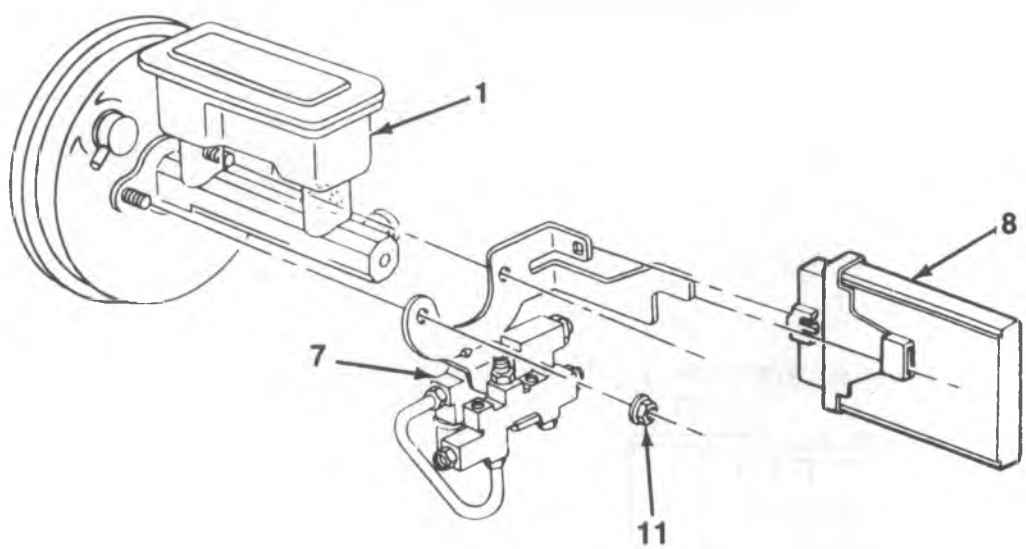

1. Master Cylinder
7. Isolation/Dump Valve
8. RWAL ECU
11. Bolt

V0321

Figure 20—RWAL ECU and Isolation/Dump Valve

3. Electrical connector to the RWAL ECU.
   - If there is brake fluid on the connectors, clean them with water followed by Isopropyl alcohol.
4. Brake lines.

   Tighten
   - Fittings to 24 N•m (18 ft. lbs.).

- Bleed the brake system as outlined in HYDRAULIC BRAKES (SEC. 5A).

SPEEDOMETER CALIBRATION

If the final drive ratio is changed (including tire size) for any reason, the (DRAC) must also be changed to match. This will ensure accurate speedometer readings. The parts book lists DRAC's (or Boffers) for a variety of tire sizes and rear axle ratios.

SPEED SENSOR

The speed sensor is not serviceable. It should be replaced when necessary. The sensor is located in the left rear of the transmission on two wheel drive models and on the transfer case for four wheel drive models.

The resistance of the speed sensor should be 900 to 2000 ohms.

Remove or Disconnect (Figure 21)

1. Connector.
2. Bolt (129) (if used).
3. Speed sensor.
   - Have a suitable container to catch fluid.
4. O-ring seal.

Install or Connect (Figure 21)

1. New speed sensor and O-ring seal.
   - Coat the seal with a thin film of transmission fluid.

NOTICE: See "Notice" on page 5A3-1 of this section.

2. Bolt (129) (if used).

   Tighten
   - Bolt to 11 N•m (8 ft. lbs.) (automatic transmissions).
   - Speed sensor to 43 N•m (32 ft. lbs.) (transfer case and M20 transmission).
3. Electrical connector.

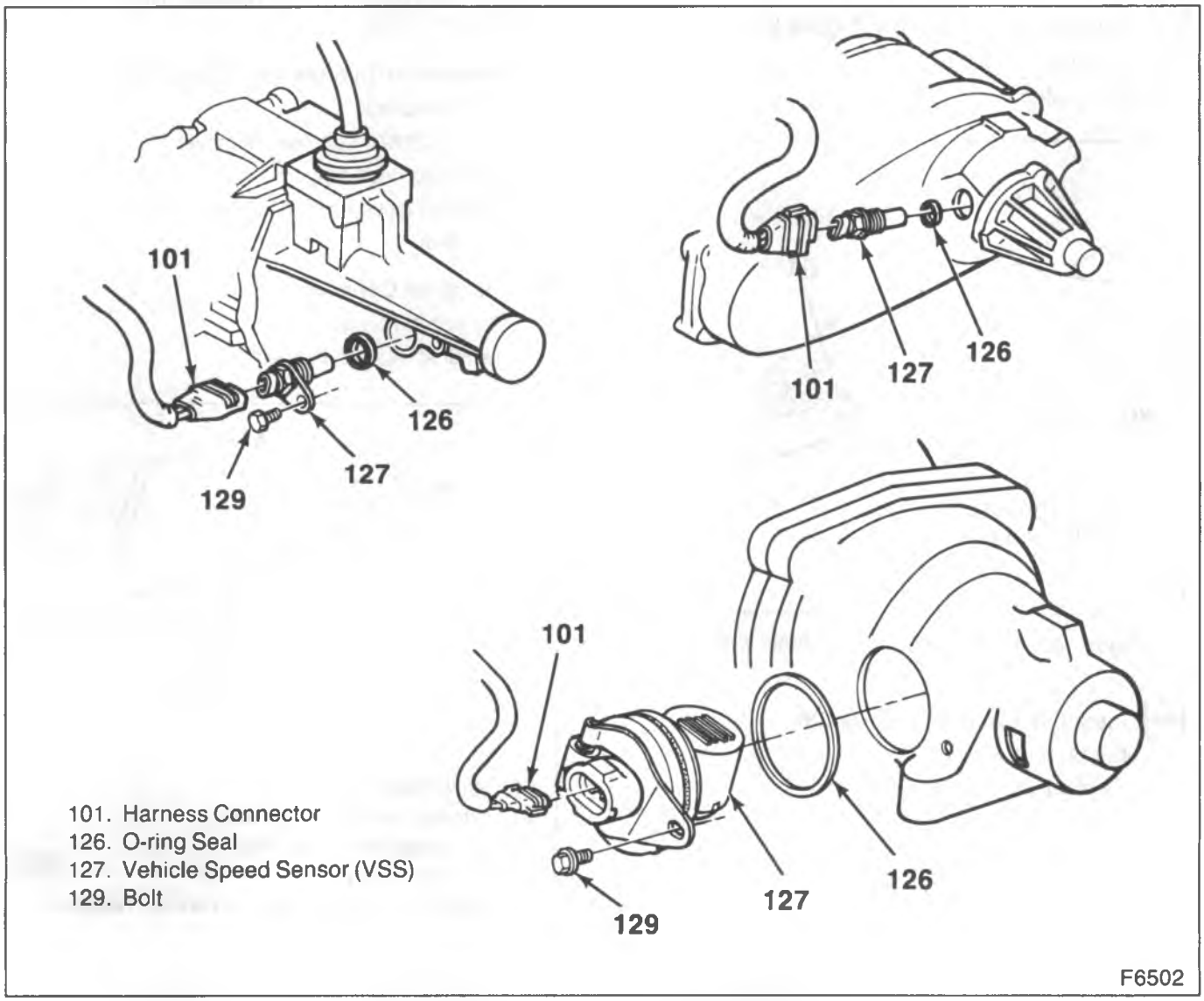

Figure 21 – Speed Sensor Installation

WIRING AND CONNECTOR REPAIR

CIRCUIT MAINTENANCE AND REPAIR

MAINTENANCE AND REPAIR

All electrical connections must be kept clean and tight. Loose or corroded connections may cause a discharged battery, difficult starting, dim lights, and possible damage to the generator and regulator. Wires must be replaced if insulation becomes burned, cracked, or deteriorated.

To splice a wire or repair one that is frayed or broken always use rosin flux solder to bond the splice and insulating tape to cover all splices or bare wires.

When replacing wire, it is important that the correct size wire be used as shown on applicable wiring diagrams or parts book. Each harness or wire must be held securely in place to prevent chafing or damage to the insulation due to vibration.

Never replace a wire with one of smaller size or replace a fusible link with a wire of a larger size.

WIRING CONNECTOR TERMINAL REPLACEMENT (BLADE TYPE)

Remove or Disconnect (Figure 22)

1. Terminal lock tang.
2. Terminal (61).

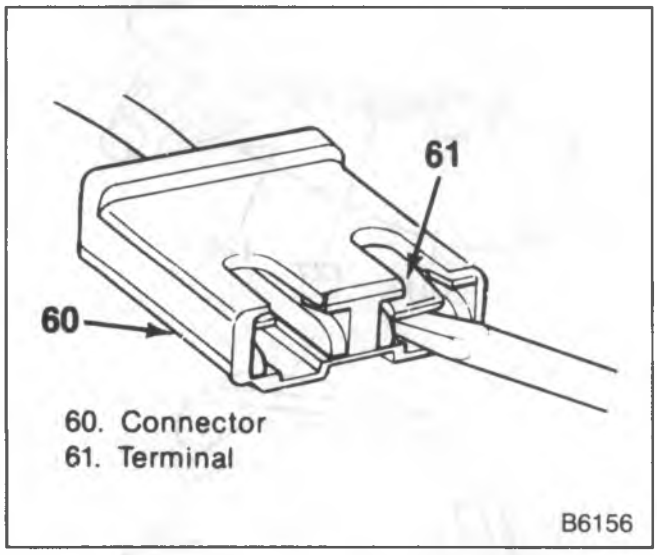

Figure 22—Removing the Terminals From the Connector

Install or Connect (Figure 23)

1. Pry up on the tang (70).
2. Terminal into the connector.

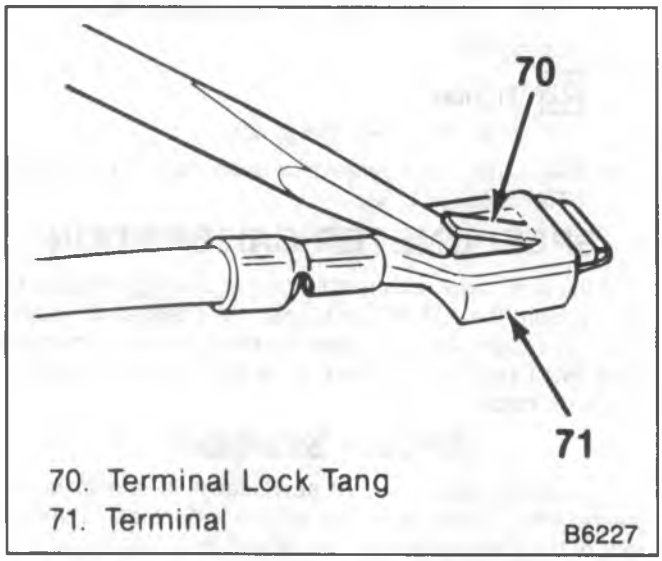

Figure 23—Resetting the Lock Tang

WIRING CONNECTOR TERMINAL REPLACEMENT (TWIN LOCK TYPE)

Remove or Disconnect (Figure 24)

Tool Required:

J 22727 Terminal Remover

1. Connector lock tangs.
2. Terminal locks using J 22727.
3. Terminal.

Install or Connect

1. Pry out the tangs.
2. Terminal into the connector.

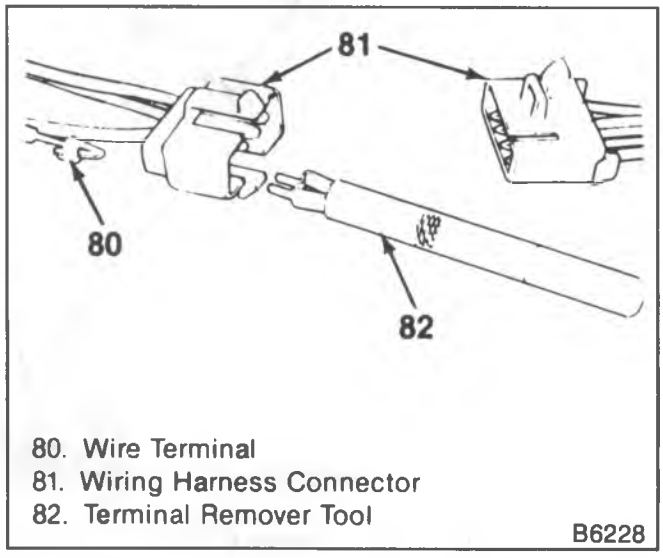

Figure 24—Twin Lock Connector Terminal

WEATHER-PACK CONNECTORS

Special connectors known as Weather-Pack connectors (figure 25) require a special tool J 28742 for servicing. This special tool is required to remove the pin and sleeve terminals. If removal is attempted with an ordinary pick, there is a good chance that the terminal will be bent or deformed. Unlike standard blade-type terminals, these terminals cannot be straightened once they are bent.

Make sure that the connectors are properly seated and all of the sealing rings in place when connecting the leads. The hinge-type flap provides a back-up, or secondary locking feature for the terminals. They are used to improve the connector reliability by retaining the terminals if the small terminal lock tangs are not positioned properly.

Molded-on-connectors require complete replacement of the connection. This means splicing on a new connector assembly into the harness. Environmental connections cannot be replaced with standard connections. Instructions are provided with the Weather-Pack connector and terminal packages.

With the low current and voltage levels found in some circuits, it is important that the best possible bond at all wire splices can be made by soldering the splices.

Use care when probing the connections or replacing terminals in them, it is possible to short between opposite terminals. If this happens to the wrong terminal part, it is possible that damage may be done to certain components. Always use jumper wires between connectors for circuit checking. Never probe through the Weather-Pack seals.

When diagnosing for possible open circuits, it is often difficult to locate them by sight because oxidation or terminal misalignment are hidden by the connectors. Merely wiggling a connector on a sensor or in the wiring harness may correct the open circuit condition. This should always be considered when an open circuit is indicated while troubleshooting. Intermittent problems may also be caused by oxidized or loose connections.

Remove or Disconnect (Figure 25)

Tool Required:

J 28742 Terminal Remover

1. Primary lock (121) by lifting.
2. Connector sections.
3. Secondary lock (125) by spreading the sides of the hasp, thus clearing the staples and rotating the hasp. (127)
4. Terminal (131) by using J 28742 (128).

- Snip off the old terminal assembly.

5. 5 mm of the wire insulation (130).

Clean

- Terminal barrel (124).

Install or Connect (Figure 25)

Tool Required:

J 35606 Crimper

1. Terminal insulator (134) on the wire. Slide the insulator back on the wire about 8 cm (3 inches).
2. Terminal (131) on the wire.

- Roll crimp (132) using J 35606.
- Solder the terminal.

3. Terminal insulator (134) and the roll crimp (133).
4. Terminal into the connector.
5. Secondary lock (125).
6. Connector sections until the primary lock (121) engages.

METRI-PACK CONNECTORS

The Metri-Pack connectors use a pull-to-seat type terminal, as shown in figure 25. The special tool required to remove the terminal is J 35689-A terminal remover. If removal is attempted with an ordinary pick, there is a good chance that the terminal will be bent or deformed. Refer to figure 25.

METRI-PACK CONNECTOR REPLACEMENT

Remove or Disconnect (Figure 25)

Tool Required:

J 35689-A Terminal Remover

1. Primary lock (121) by lifting.
2. Connector body (137).
3. Connector seal (120) by pulling the seal back onto the wires away from the connector body (137).
4. Terminal (136) by inserting J 35689 (139) into the connector body (137) to depress the locking tang (138), then push the wire and terminal through the connector body (figure 26).

- Snip off the old terminal unless the terminal is to be reused, reshape the locking tang.

5. 5 mm (0.2-inch) of the wire insulation (130).

Clean

- Terminal cavity of the connector body.

Remove or Disconnect (Figure 25)

1. Terminal (136) on the wire.

- Crimp and solder the terminal.

2. Terminal (136) into the connector cavity by pulling the wire on the seal side of the connector until the locking tang (138) is fully seated.
3. Seal (120) by pressing the seal into the connector body (137) until it is fully seated.
4. Connector until the primary lock (121) engages.

WIRING REPAIR

The wire repair is very important for the continued reliable operation of the vehicle. This repair must be done as described in the following procedures.

Twisted Wires (Figure 26)

Remove or Disconnect

1. Jacket (90).
2. Twisted wires (91).
3. Insulation from the wire.

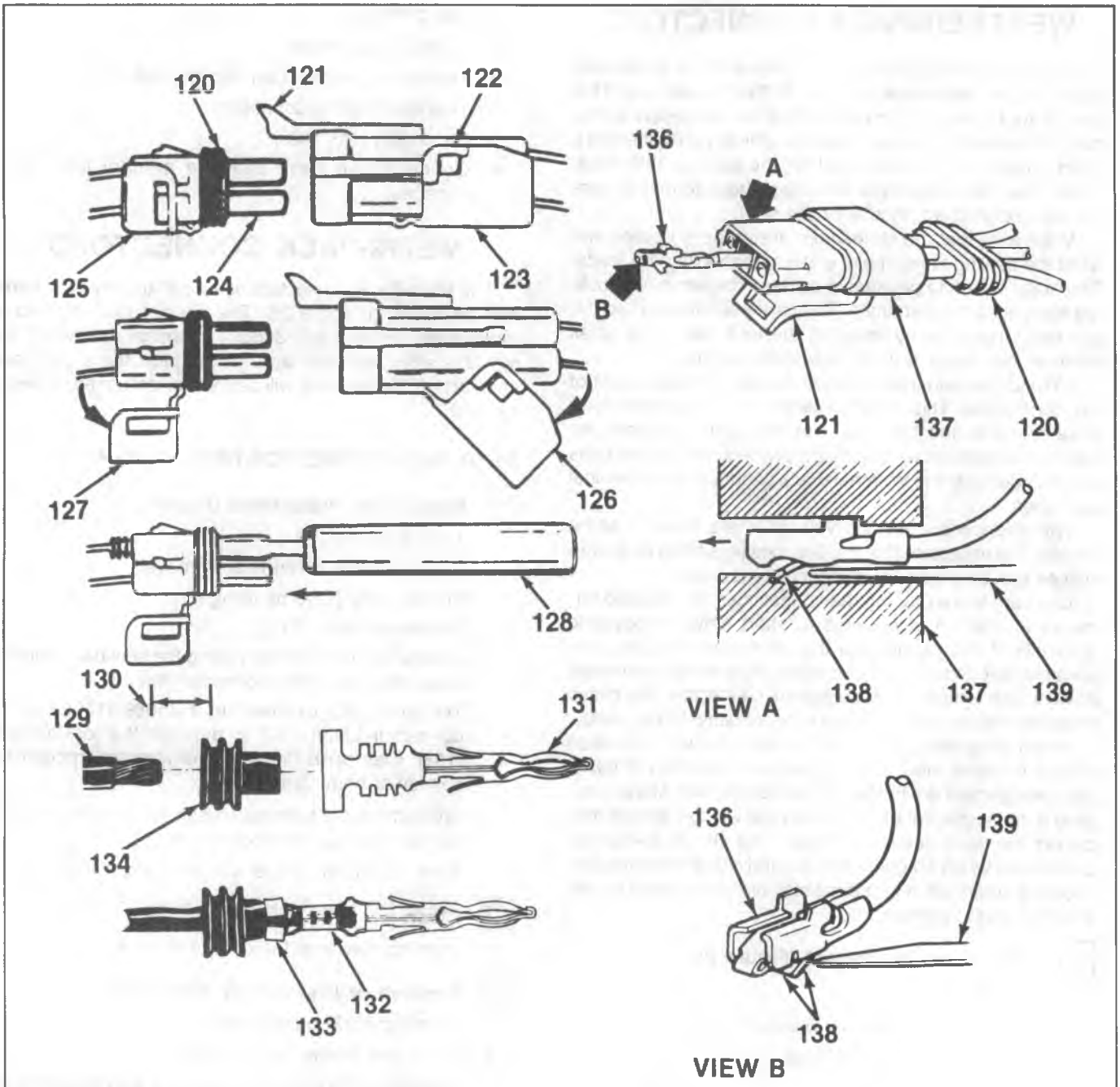

120. Connector Seal
121. Primary Lock
122. Secondary Lock Staple
123. Secondary Lock
124. Terminal Barrel
125. Secondary Lock
126. Lock Opened
127. Lock Opened
128. J-28742 Terminal Remover
129. Wire
130. 5 mm (0.2 inch)
131. Terminal
132. Roll Crimp
133. Roll Crimp
134. Terminal Insulator
136. Metri-Pack Series 150 Female Terminal
137. Connector Body
138. Locking Tang
139. J-35689 Terminal Remover

F2349

Figure 25—Weather-Pack and Metri-Pack Connector

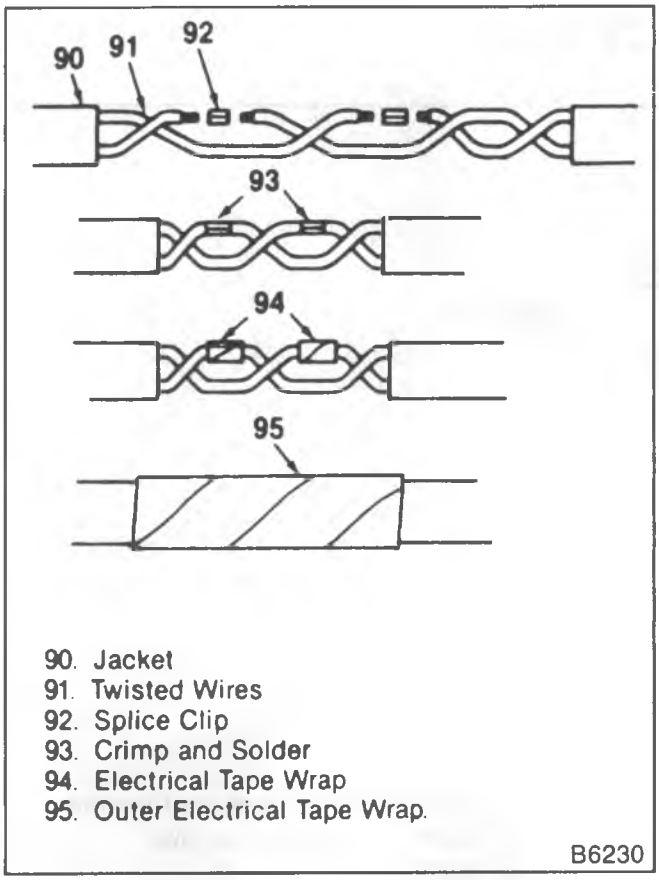

Figure 26 – Twisted Wire Repair

Install or Connect

1. Splice clip (93).
- Crimp.
- Solder.
2. Electrical tape wrap (94) on the wires.
3. Outer electrical tape wrap (95).

Twisted Wires/Shielded Cable (Figure 27)

Remove or Disconnect

1. Jacket (100).
2. Unwrap aluminum/mylar tape (101).
3. Drain wire (102).
4. Leads.
5. Insulation on the leads.

Install or Connect

1. Splice clips (103).
2. Crimp and solder the splice clips (104).
3. Electrical tape (105) on the splices.
4. Aluminum/mylar tape by wrapping and taping.
5. Drain wire with a splice clip (106). Crimp and solder the splice clip.
6. Outer jacket electrical tape wrap (107).

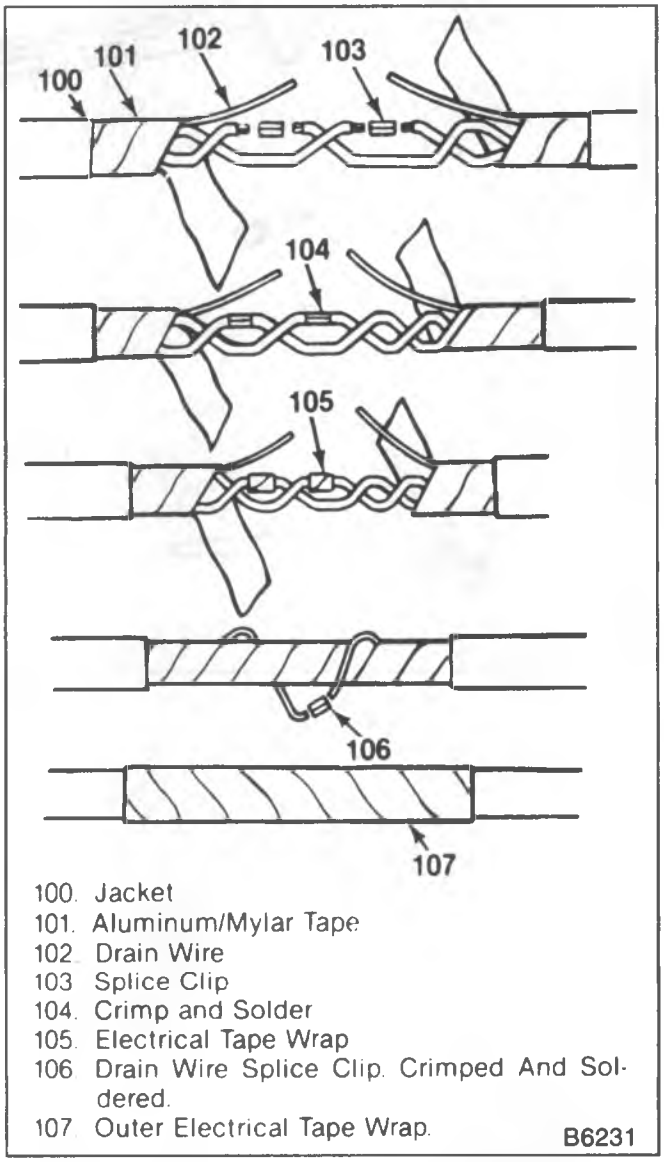

Figure 27 – Twisted/Shielded Wire Repair

SPECIFICATIONS

	N.m	Ft. Lbs.
Isolation/Dump Valve to Bracket Bolts	29	21
Brake Line Fittings	24	18
Speed Sensor Bolt (Automatic Transmissions)	11	8
Speed Sensor (Transfer Case or M20)	43	32

TB-3124-2A

SPECIAL TOOLS

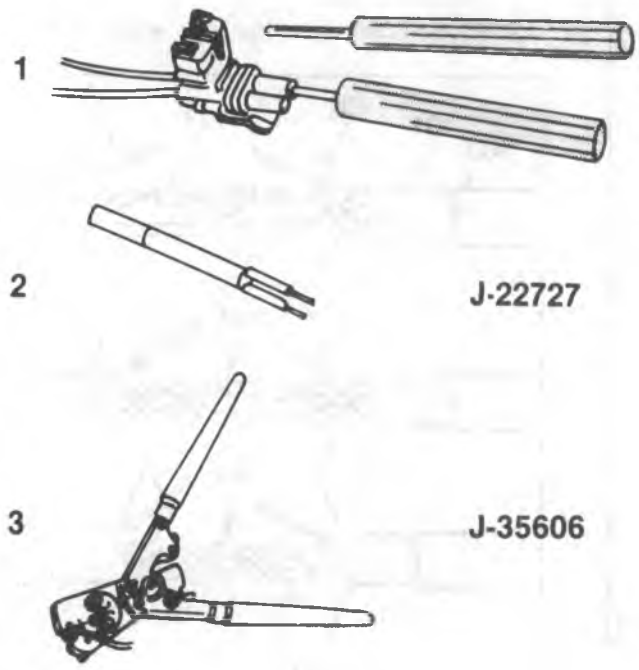

1. Weather-Pack II Terminal Remover
2. Electrical Terminal Remover
3. Crimper

V0327

SECTION 5C

PARKING BRAKES

NOTICE: When fasteners are removed, always reinstall them at the same location from which they were removed. If a fastener needs to be replaced, use the correct part number fastener for that application. If the correct part number fastener is not available, a fastener of equal size and strength (or stronger) may be used. Fasteners that are not reused, and those requiring thread locking compound will be called out. The correct torque value must be used when installing fasteners that require it. If the above conditions are not followed, parts or system damage could result.

CAUTION: When servicing wheel brake parts, do not create dust by grinding or sanding brake linings or by cleaning wheel brake parts with a dry brush or with compressed air. (A water dampened cloth should be used.) Many wheel brake parts contain asbestos fibers which can become airborne if dust is created during servicing. Breathing dust containing asbestos fibers may cause serious bodily harm.

CONTENTS

SUBJECT	PAGE
Description	5C- 1
Automatic Apply Parking Brake (P-Motorhome)	5C- 1
On-Vehicle Service	5C- 2
Parking Brake Pedal or Handle Replacement	5C- 2
Cable Replacement	5C- 5
Propeller Shaft Brake Replacement	5C- 9
Parking Brake Adjustment	5C-10
Automatic Apply Parking Brake (P-Motorhome) On-Vehicle Service	5C-11
Control Valve Replacement	5C-11
Relay Valve Replacement	5C-11
Actuator Replacement	5C-12
Parking Brake Control Rod Adjustment	5C-12
Parking Brake System Bleeding	5C-12
Specifications	5C-13

DESCRIPTION

This vehicle is equipped with coated parking brake cable assemblies. The wire strand is coated with a nylon material which slides over plastic seals inside the conduit end fittings. This is for corrosion protection and reduced parking brake effort.

NOTICE: Handling of these cables during servicing of the parking brake system requires extra care. Damage to the nylon coating will reduce corrosion protection and if the damaged area passes through the seal, increased parking brake effort could result. Avoid contacting the coating with sharp-edged tools, or with sharp surfaces of the vehicle underbody, should be avoided.

To prevent damage to the threaded parking brake adjusting rod when servicing the parking brake, the following is recommended:

- Before attempting to turn the adjusting yoke, clean the exposed threads on each side of the yoke.
- Lubricate the threads of the adjusting rod before turning the yoke.

AUTOMATIC APPLY PARKING BRAKE (P-MOTORHOME)

Figure 1

With the shift selector in park; Engine running; and the manual foot lever in the released position, fluid will flow from the steering gear to port "SR" on the relay valve, through the relay valve and out port "TW" to the control valve supply port "SC". Once the system is charged, the pressure should range between 130 and 150 psi. Any excess fluid will be discharged through port "R" back to the pump. The supply port or charge port "SC" is blocked off due to the control valve position in the park mode.

Any previously built pressure in the control valve flows through the control valve out port "EC" back through the relay valve, this triggers a release of pressure from port "D" of the relay valve through port "ER" to the reservoir. This allows the spring controlled actuator to apply the parking brake. The spring will apply the brake by traveling as far as the brake adjustment demand requires to balance brake apply and spring force.

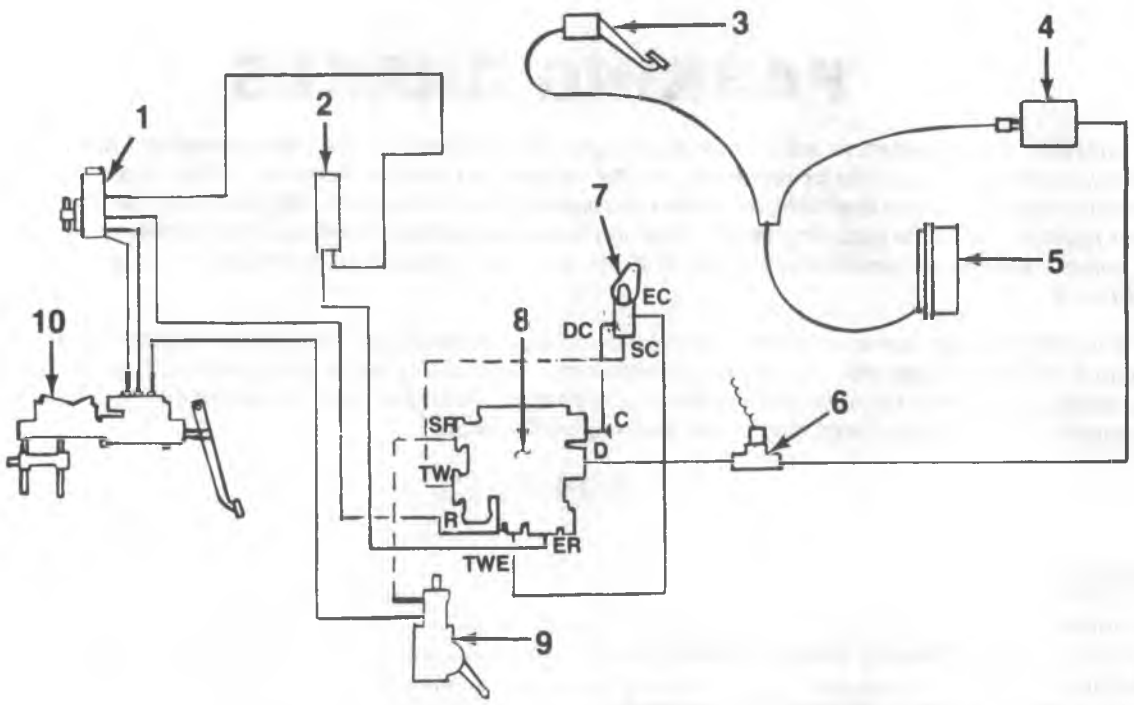

1. Power Steering Pump
2. Reservoir
3. Parking Brake Pedal
4. Actuator
5. Parking Brake
6. Pressure Switch
7. Control Valve
8. Relay Valve
9. Steering Gear
10. Master Cylinder

SR — Supply to Relay Valve
TW — Supply to Control Valve
R — Return to Pump
TWE — Control Valve Exhaust
ER — Exhaust to Reservoir
D — Delivery to Actuator
C — Control Signal
DC — Delivery From Control Valve
SC — Supply to Control Valve
EC — Exhaust From Control Valve

V0578

Figure 1 – Automatic Parking Brake Components

When the valve is released from the park position, the fluid charge at the shift control valve port "SC" is diverted to port "DC". The shift control port "EC" is blocked off. The fluid charge at the relay valve port "SR" is diverted to port "D", this pressurizes the parking brake system and actuator. The fluid pressure working against the spring pressure in the actuator releases the parking brake.

The manual foot lever should still be applied whenever the vehicle is shifted into park. This will alert the driver of the need for adjustment in the parking brake system.

ON-VEHICLE SERVICE

PARKING BRAKE PEDAL OR HANDLE REPLACEMENT

R/V MODELS

Remove or Disconnect (Figures 2 and 5)

- The parking brake must be in the released position.

1. Nuts (11).
2. Release rod (13).
3. Bolt (12).
4. Brake assembly.
5. Parking brake cable (figure 5).

Install or Connect (Figures 2 and 5)

NOTICE: For steps 3 and 5 see "Notice" on page 5C-1 of this section.

1. Parking brake cable.
2. Brake assembly.
3. Bolt (12).
4. Release rod (13).
5. Nuts (11).

Tighten

- Nuts to 10 N•m (89 lb. in.).
- Bolt to 17 N•m (13 lb. ft.).

- Check the parking brake adjustment. Refer to "Parking Brake Adjustment" in this section.

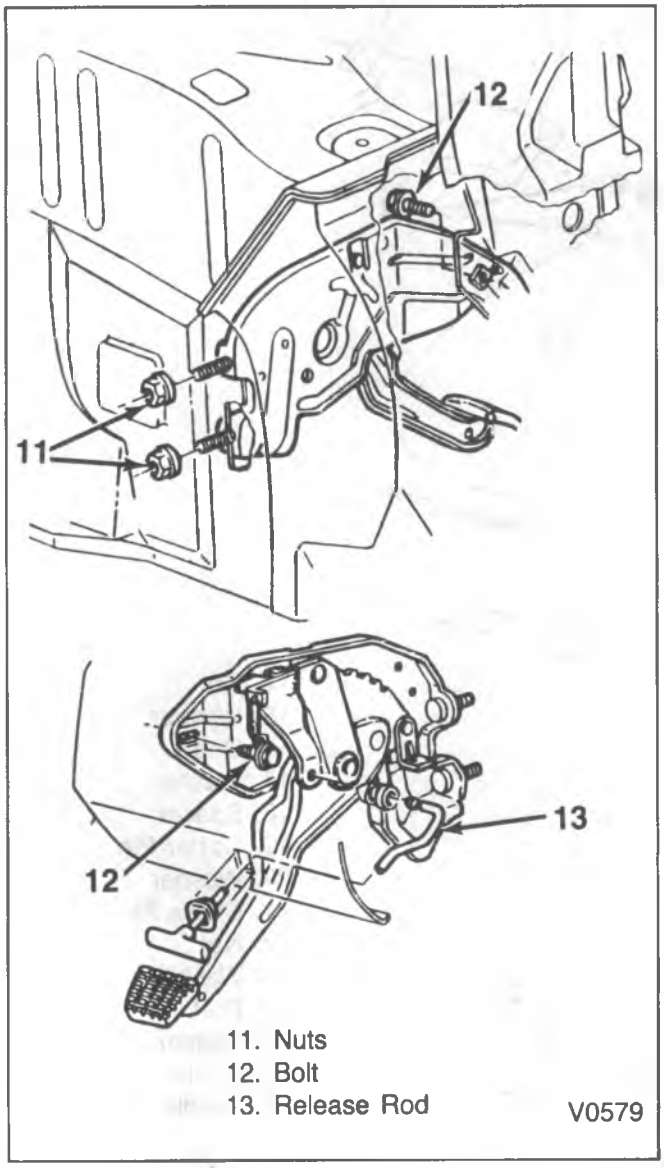

Figure 2 – Removing/Installing Parking Brake Pedal on R/V Models

P – COMMERCIAL MODELS

Remove or Disconnect (Figure 3)

- The parking brake must be in the released position.

1. Nuts (14) and washers (15).
2. Bolts (16) and washers (17).
3. Spacers, (18) if used.
4. Cotter pin (19) and washer (20).
5. Clevis pin (21).
6. Nut (22) and washer (23).
7. Bolt (24).
8. Spacer, (25) if used.
9. Cable (26).
10. Handle assembly (27).

Install or Connect (Figure 3)

NOTICE: For steps 6, 7, 9 and 10 see "Notice" on page 5C-1 of this section.

1. Handle assembly (27).
2. Cable (26).
3. Clevis pin (21).
4. Washer (20) and cotter pin (19).
5. Spacer, (25) if used.
6. Bolt (24).
7. Washer (23) and nut (22).
8. Spacer, (18) if used.
9. Washer (17) and bolts (16).
10. Washers (15) and nuts (14).

Tighten

- Nuts to "Specifications" at the end of this section.

- Check the parking brake adjustment. Refer to "Parking Brake Adjustment" in this section.

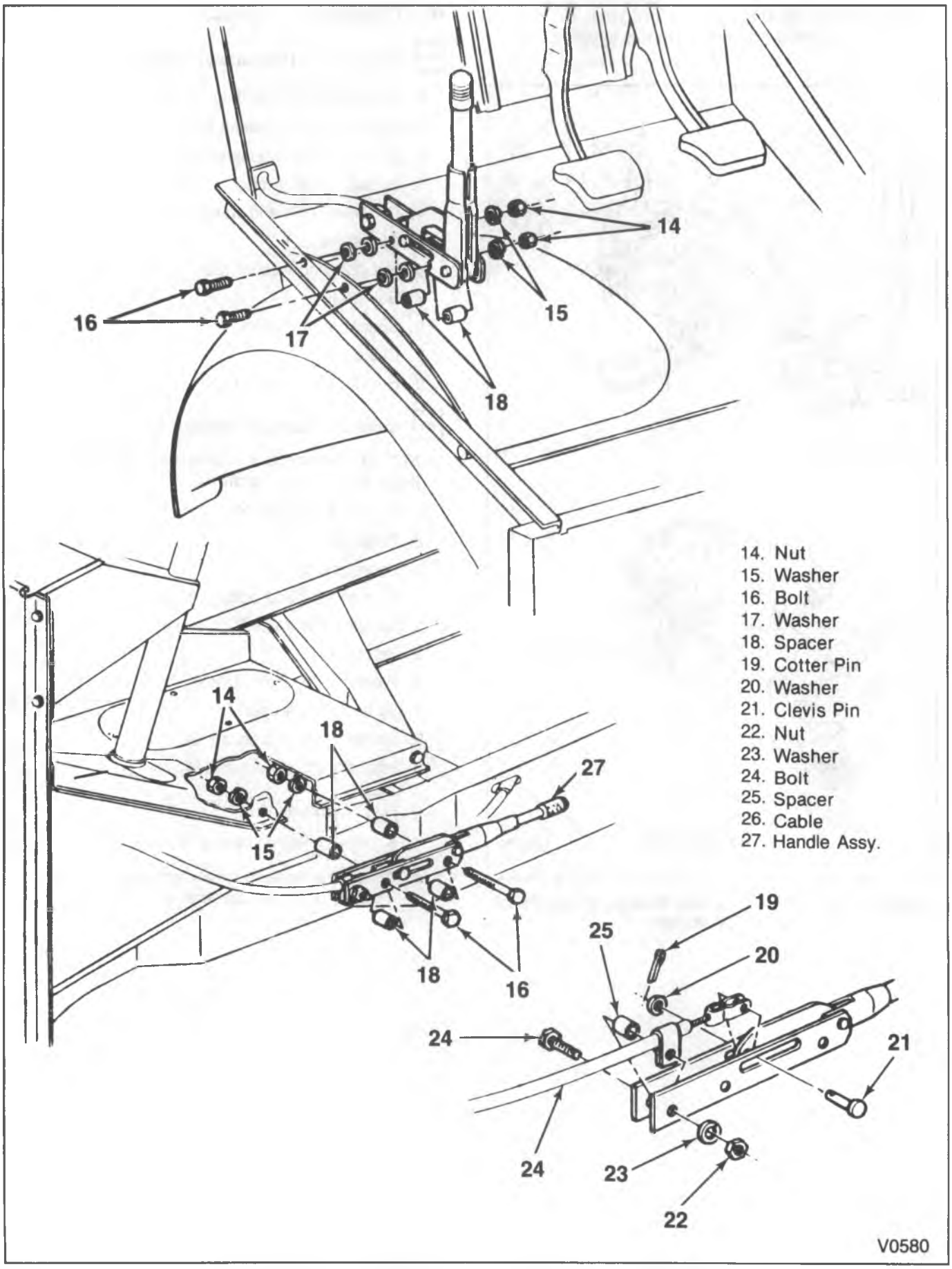

Figure 3—Removing/Installing Parking Brake Lever on P — Commercial Models

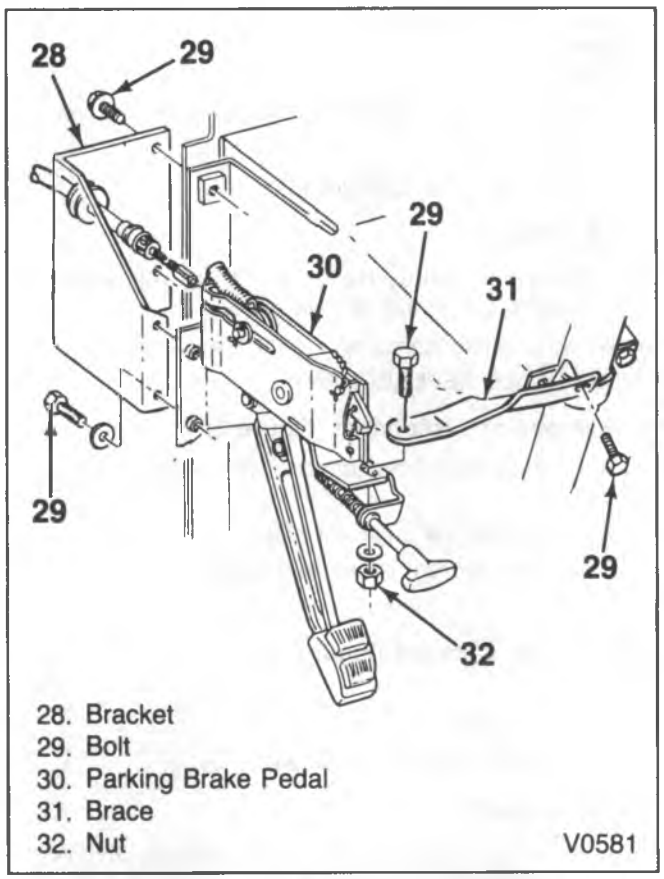

Figure 4 – Removing/Installing Parking Brake Pedal on P Motorhome Models

CABLE REPLACEMENT

FRONT CABLE REPLACEMENT (R/V AND P – MOTORHOME MODELS)

Remove or Disconnect (Figures 2, 5 and 6)

- Raise the vehicle and support with suitable safety stands.

1. Nut (33) from the equalizer (34).
2. Connector (35) from the front cable.
3. Cable from the frame bracket.
4. Nuts from pedal assembly (R/V).
5. Bolts from pedal assembly and from brace (31) on P – motorhome models.
6. Parking brake pedal assembly.
7. Bend retaining fingers (36) and (37).
8. Cable from the brake pedal assembly.
9. Cable assembly (38).
   - Attach a piece of wire to the cable to help in installation.

Install or Connect (Figures 5 and 6)

1. Cable assembly (38).
   - Make sure all the retaining fingers (36) and (37) are completely through the holes.
2. Cable to the pedal assembly.
3. Parking brake pedal assembly.
4. Bolt (12) to pedal assembly.
5. Nuts (11) to pedal assembly.

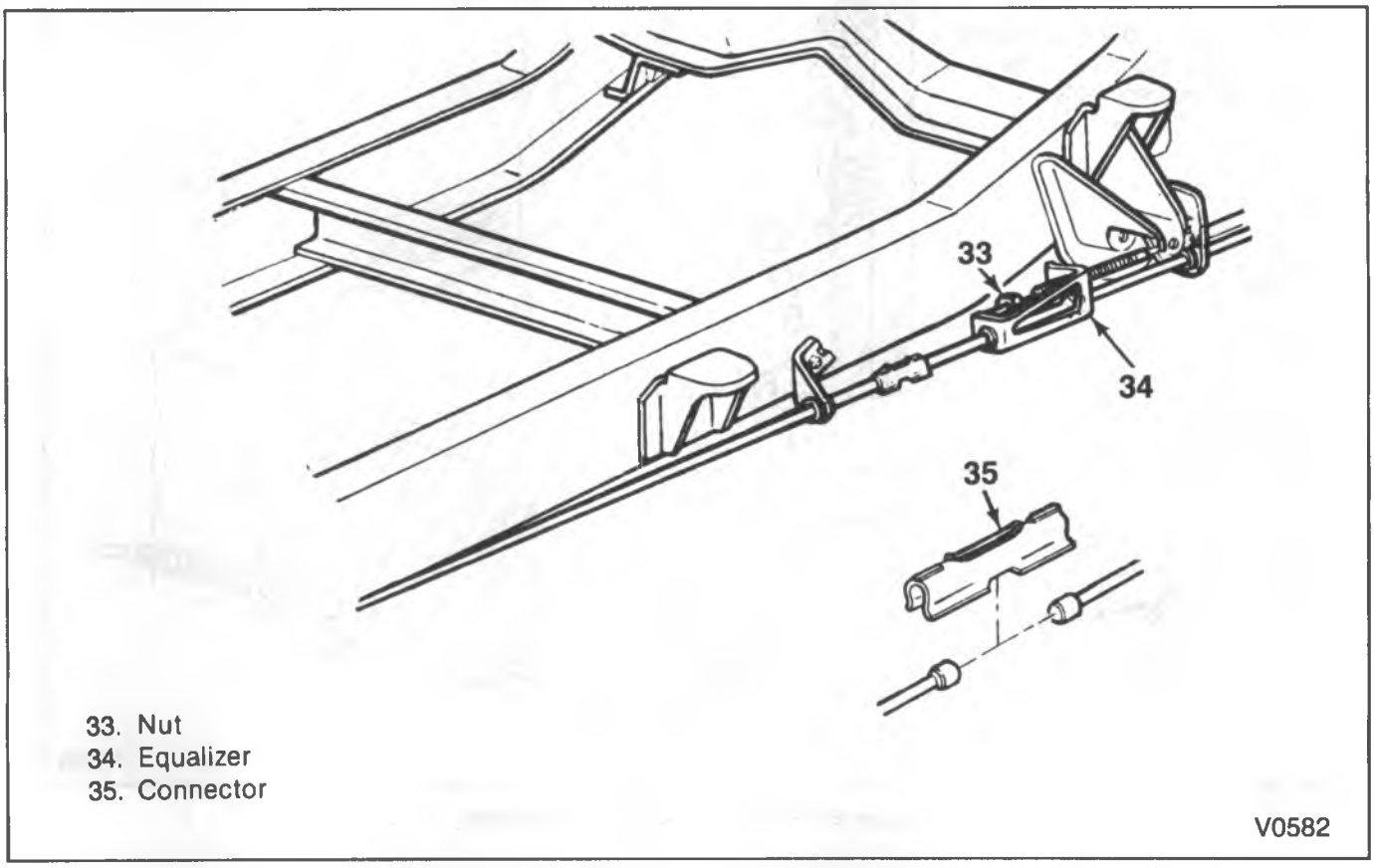

Figure 5 – Equalizer Components R/V, P-Commercial

6. Cable to frame bracket.
7. Connector (35).
8. Nut (33) onto the equalizer (34).

Adjust

- Parking brake. Refer to "Parking Brake Adjustment" in this section.

- Lower the vehicle.

FRONT CABLE REPLACEMENT – P – COMMERCIAL MODELS

Remove or Disconnect (Figures 3, 5 and 7)

- Raise the vehicle and support with suitable safety stands.

1. Nut (33) from the equalizer (34).
2. Connector (35) from the front cable.
3. Bolts (41) and clips (42).
4. Cable from the handle assembly.
   - Remove cotter pin (19), washer (20) and clevis pin (21).
   - Remove nut (22), washer (23) and bolt (24).
5. Cable assembly.
   - Attach a piece of wire to the cable to help in installation.

Install or Connect (Figures 3, 5 and 7)

1. Cable assembly.
2. Cable to the handle assembly.
   - Install bolt (24), washer (23) and nut (22), the clevis pin (21), washer (20) and cotter pin (19).
3. Clips (42) and bolts (41).

Tighten

- Bolts to "Specifications" at the end of this section.

4. Connector (35).
5. Nut (33) onto the equalizer (34).

Adjust

- Parking brake. Refer to "Parking Brake Adjustment" in this section.

- Remove safety stands and lower the vehicle.

CENTER CABLE REPLACEMENT

Remove or Disconnect (Figure 5)

- Raise the vehicle and support it with suitable safety stands.

1. Nut (33) from the equalizer (34).
2. Both front and rear connectors (35).
3. Cable.

Install or Connect (Figure 5)

1. Cable.
2. Connector (35).
3. Nut (33) onto the equalizer (34).

Adjust

- Parking brake. Refer to "Parking Brake Adjustment" in this section.

- Remove safety stands and lower the vehicle.

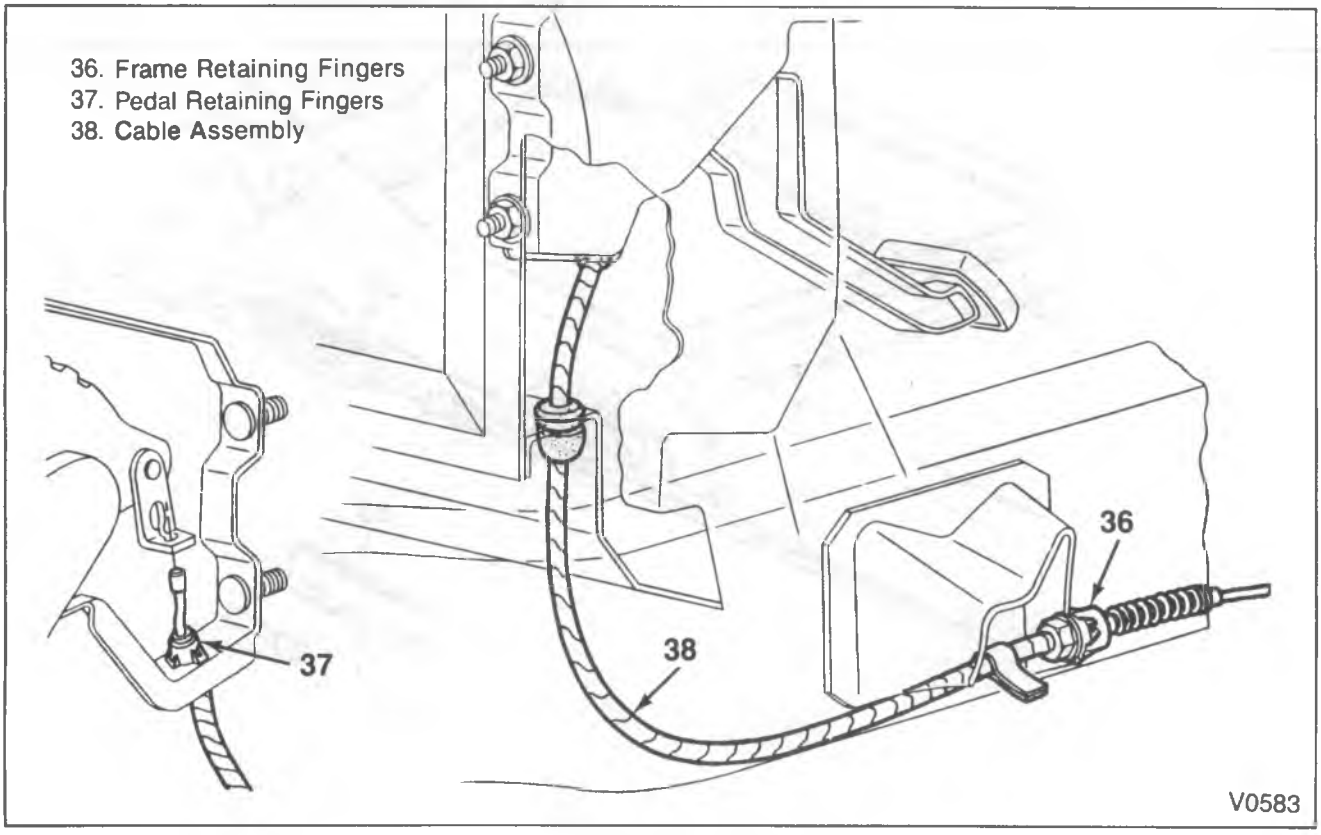

Figure 6 – R/V Front Cable Components

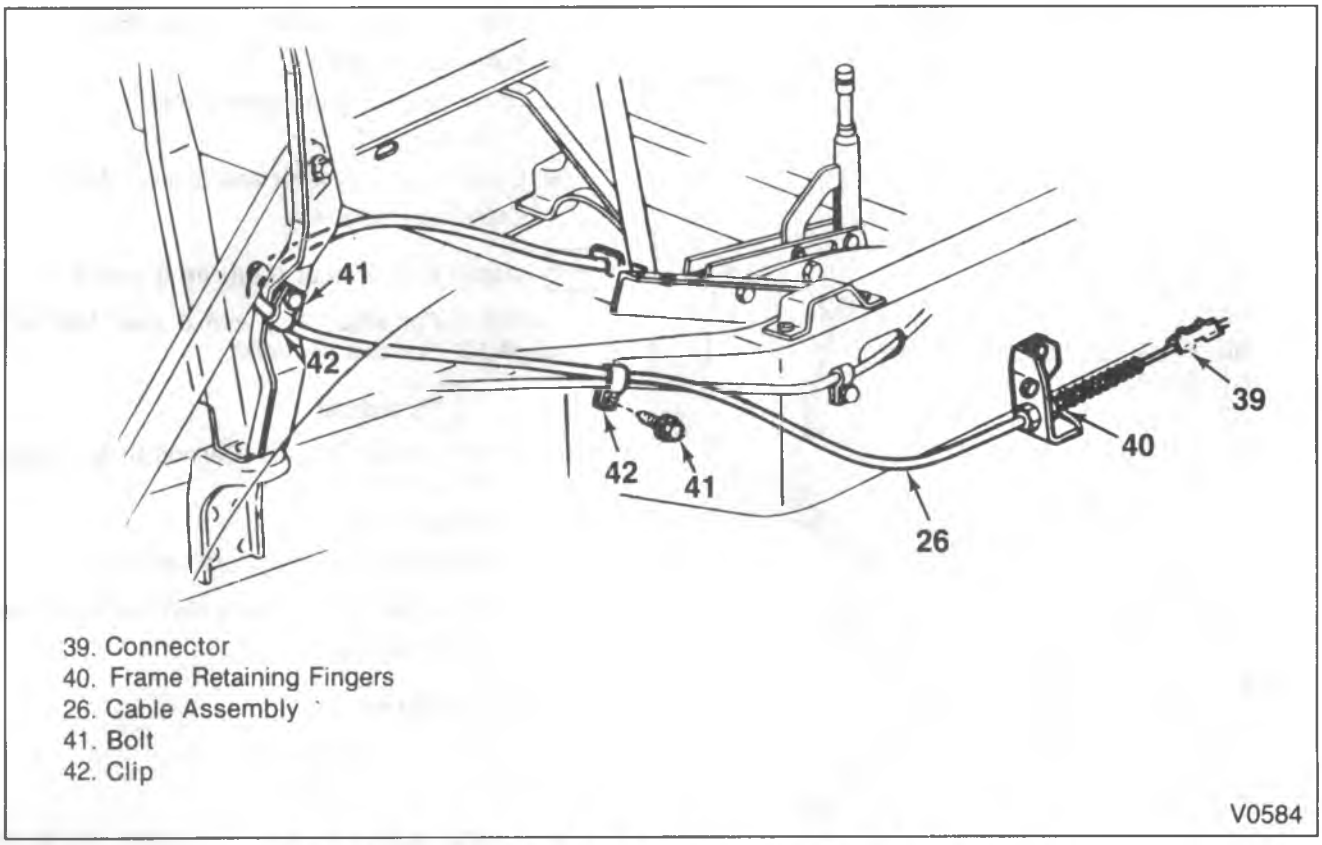

Figure 7—P Model Front Cable Components (Except Motorhome)

REAR CABLE REPLACEMENT

Remove or Disconnect (Figure 5)

- Raise the vehicle and support it with suitable safety stands.

1. Nut (33) from the equalizer (34).
2. Connector (35).
3. Brake drum and shoes. Refer to HYDRAULIC FOUNDATION BRAKES (SEC. 5A2).
   - Bend in cable retaining fingers at the backing plate.
4. Retaining clip at the frame support.
5. Cable assembly.

Install or Connect (Figure 5)

1. Cable assembly.
   - Make sure all the retaining fingers are completely through the backing plate.
2. Retaining clip at the frame support.
3. Brake shoes and drum assembly. Refer to HYDRAULIC FOUNDATION BRAKES (SEC. 5A2).
4. Connector (35).
5. Nut (33) onto the equalizer (34).

Adjust

- Parking brake. Refer to "Parking Brake Adjustment" in this section.
- Lower the vehicle.

FRONT CABLE REPLACEMENT (P-MOTORHOME)

Remove or Disconnect (Figure 8)

- Raise vehicle and support with suitable safety stands.

1. Clevis pin and yoke from relay lever, cable from bracket.
2. Bolts and clips.
3. Cable from pedal assembly.
4. Cable assembly.
   - Attach a piece of wire to the cable to help in installation.

Install or Connect (Figure 8)

1. Cable assembly.
2. Cable to pedal assembly.

NOTICE: See "Notice" on page 5C-1 of this section.

3. Bolts and clips.

   Tighten
   - Bolts to 10 N•m (89 lb. in.).
   - Rotate relay lever counterclockwise until it stops against the actuator lever.
4. Yoke onto threaded rod until all slack is removed.
5. Yoke onto relay lever and bracket, clevis pin.

   Adjust
   - Check the parking brake adjustment. Refer to "Parking Brake Adjustment" in this section.

- Remove safety stands and lower vehicle.

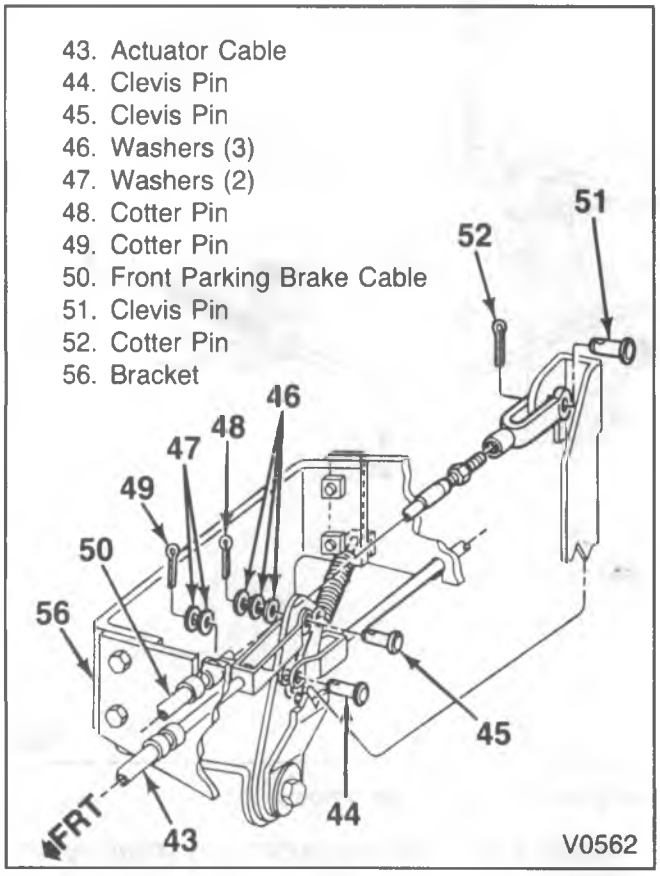

Figure 8—P-Motorhome Model Relay Lever Assembly

ACTUATOR CABLE REPLACEMENT (P-MOTORHOME)

Remove or Disconnect (Figures 8 and 9)

- Raise vehicle and support it with suitable safety stands.
  - Turn flange nut rearward until tight against actuator bracket.

1. Cable fitting from actuator shaft.
2. Cable (43) from actuator bracket (54).
3. Bolt and clip (55).
4. Cotter pin (48) and washers (46).
5. Clevis pin (45).
6. Cable from relay lever and bracket (56).
7. Cable assembly (43).

Install or Connect (Figures 8 and 9)

NOTICE: For steps 3, 5 and 6 see "Notice" on page 5C-1 of this section.

Adjust

- Parking brake. Refer to "Parking Brake Adjustment" in this section.

1. Cable assembly.
2. Cable to relay lever and bracket (56).
   - Clevis pin (45), washers (46) and cotter pin (48).
3. Bolt and clip (55).

Tighten

- Bolts to 10 N•m (89 lb. in.).

4. Cable to actuator bracket.

- Thread cable fitting down on actuator until the slack is removed.
- Cable and brake are adjusted properly when stroke at actuator stud is between 1.20 and 1.44 inches.

5. Jam nut against cable fitting.

Tighten

- Nut to 196 N•m (145 lb. ft.).

6. Flange nut forward until it is against the jam nut.

Tighten

- Nut to 196 N•m (145 lb. ft.).

- Remove safety stands and lower the vehicle.

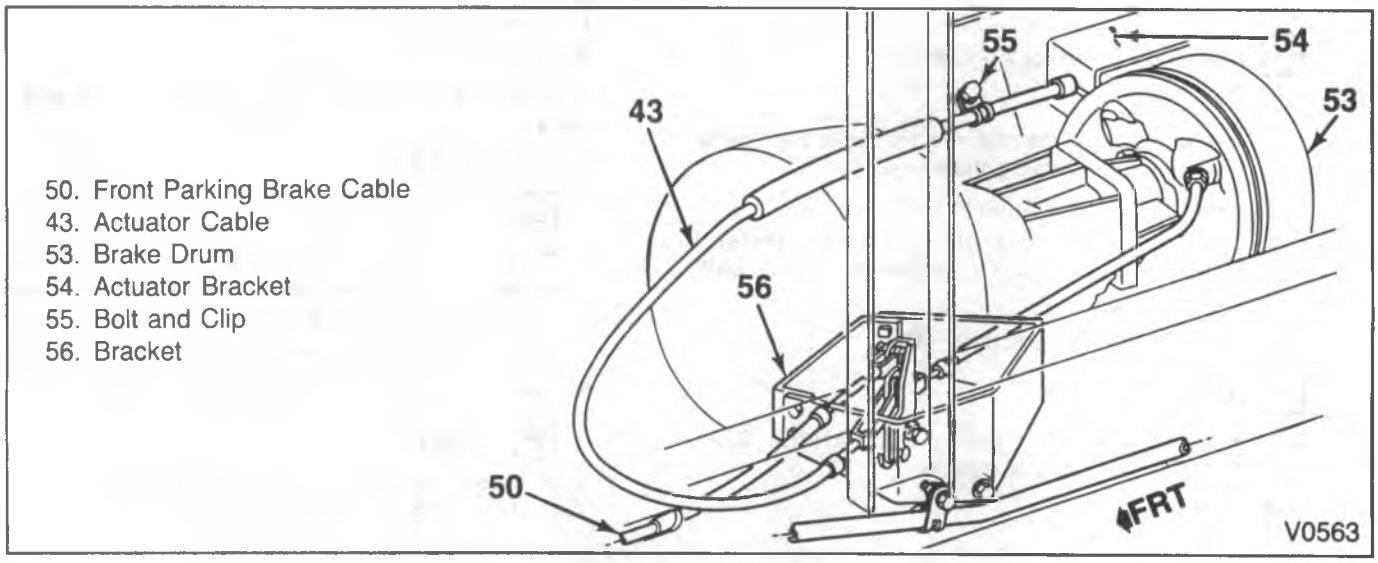

Figure 9—P-Motorhome Model Cable Components

REAR CABLE REPLACEMENT (P-MOTORHOME)

Remove or Disconnect (Figures 8, 9 and 10)

1. Propeller shaft brake. Refer to "Propeller Shaft Brake Replacement" in this section.
2. Cotter pin (49), washer (47) and clevis pin (44).
3. Cable end from relay lever and bracket.
4. Bolts and clips.
5. Cable from backing plate.
6. Cable assembly.

Install or Connect (Figures 8, 9 and 10)

1. Cable assembly.
2. Cable into backing plate.

NOTICE: See "Notice" on page 5C-1 of this section.

3. Bolts and clips.

   Tighten

   - Bolts to 10 N•m (89 lb. in.).
4. Cable to relay lever and bracket.
   - Cotter pin (49), washer (47) and clevis pin (44).
5. Propeller shaft brake. Refer to "Propeller Shaft Brake Replacement" in this section.

PROPELLER SHAFT BRAKE REPLACEMENT

Remove or Disconnect (Figure 10)

- Raise the vehicle and support it with suitable safety stands.

1. Propeller shaft. Refer to PROPELLER SHAFT (SEC. 4A).

CAUTION: See "Caution" on page 5C-1 of this section.

2. Bolt (63) and washer (62).
3. Drum.
   - It may be necessary to back off the shoe adjusting screw.
4. Return springs.
5. Return spring guide.
6. Hold-down clips.
7. Hold-down springs.
8. Washers.
9. Lever strut.
10. Strut spring.
11. Lever retaining ring.
12. Shoes.
13. Adjusting screw.
14. Adjusting screw spring.

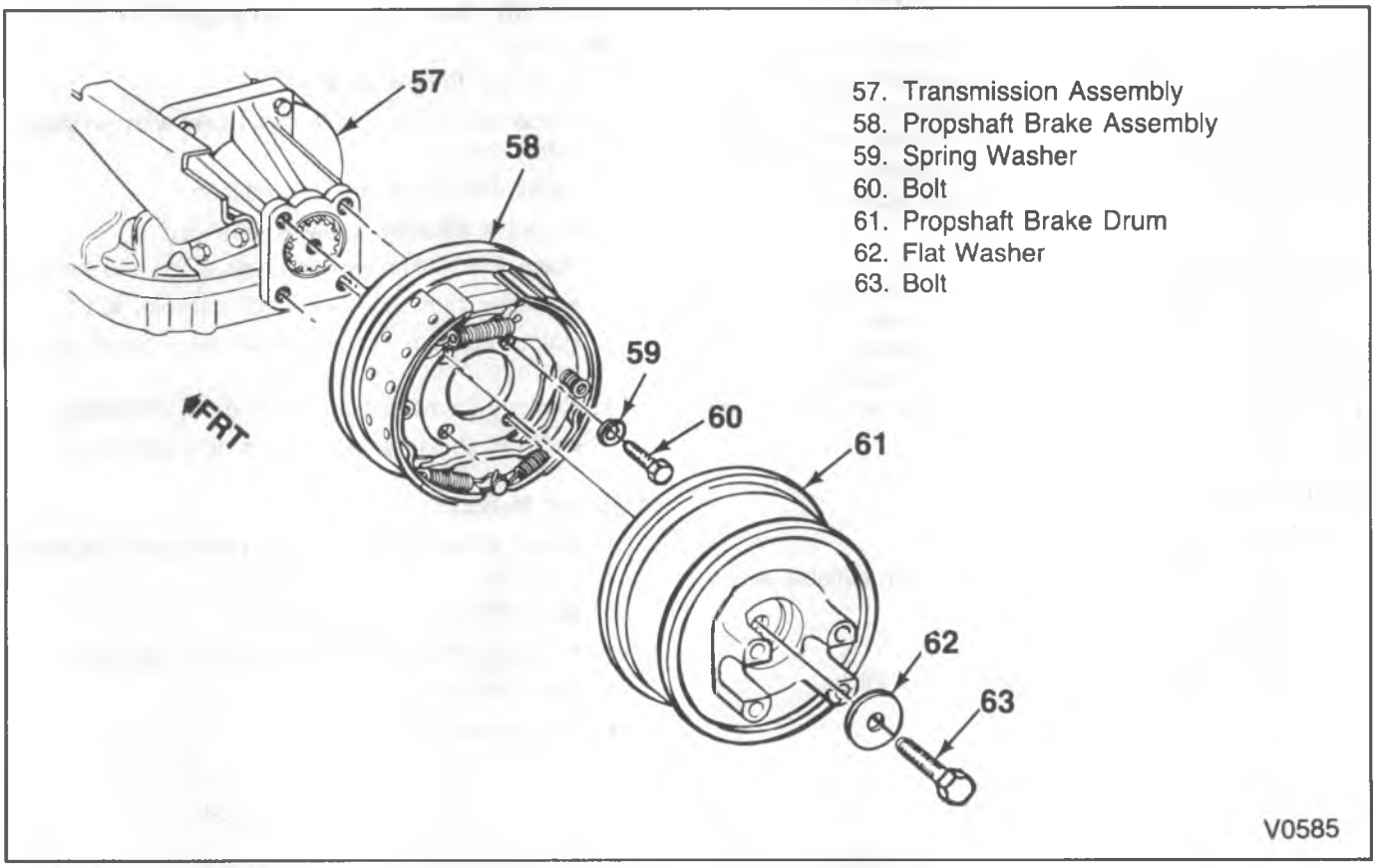

Figure 10—Propeller Shaft Brake Assembly

Inspect

- All parts for discoloration due to heat or stress. Replace if necessary.
- Brake drum (61) for scoring and heat spots. Machine drum if needed.

Install or Connect (Figure 10)

- Lubricate the shoe pads and adjusting screw threads with a thin coat of white lithium grease.

1. Adjusting screw and adjusting screw spring to both shoes.
2. Shoe assembly.
3. Lever retaining ring.
4. Lever strut and strut spring.
5. Washers.
6. Hold-down springs.
7. Hold-down clips.
8. Return spring guide.
9. Return springs.
10. Drum (61).
11. Propeller shaft. Refer to PROPELLER SHAFT (SEC. 4A).

Adjust

- Parking brake. Refer to "Parking Brake Adjustment" in this section.

- Remove safety stands and lower the vehicle.

PARKING BRAKE ADJUSTMENT

The parking brakes must be adjusted whenever the parking brake cables have been replaced or disconnected, or if the brake holding ability is not adequate. Before adjusting the parking brakes, check the condition of the service brakes. The service brakes must be adjusting properly before proceeding with the parking brake adjustment.

CABLE INSPECTION

Check the parking brake system for free operation. The brake lever/pedal must return to the released position without sticking or binding. If a problem is present, check the cable routings for kinks or binding. Clean and lubricate the parking brake assembly and cables with Delco Brake Lube or equivalent.

FOOT PEDAL TYPE

- Block the front wheels.
- Raise and support the rear axle with suitable safety stand.

1. Loosen the equalizer nut.
2. Set the parking brake pedal to four clicks.

Adjust

- Equalizer nut until the wheels rotate forward with a moderate drag.

3. Release the parking brake and rotate the rear wheels. There should be no brake drag.

- Lower the vehicle.
- Unblock the front wheels.

LEVER TYPE

- Block the front wheels.
- Raise and support the rear axle with suitable safety stands.

1. Turn the adjusting knob on the parking brake lever counterclockwise until it stops.

- Apply parking brake.

2. Loosen the equalizer nut.

Adjust

- Equalizer nut until a light drag is felt while rotating the wheels forward.
- Knob on the parking brake lever until a definite snap over center is felt.

3. Release the parking brake and rotate the rear wheels. There should be no brake drag.

- Lower the vehicle.
- Unblock the front wheels.

INTERNAL EXPANDING (PROPELLER SHAFT)

CAUTION: See "Caution" on page 5C-1 of this section.

- Block the front wheels.
- Raise and support the rear axle with suitable safety stands.

1. Install drum over first rivet section.
   - Leave adjuster screw accessible.
2. Place .010" shims between both shoes and the drum.
   - Shims should be 140 - 180 degrees apart.
3. Rotate adjuster screw until shims indicate spacing has been met (no clearance).
4. Remove shims and complete drum installation.
   - Drum should spin free with only light drag.

Optional Method:

1. Adjust screw through drum opening until brake just locks up.
2. Back off adjuster 2 - 4 notches.
   - Drum should spin free with only light drag.

- Lower the vehicle.
- Unblock the front wheels.

AUTOMATIC APPLY PARKING BRAKE (P-MOTORHOME) ON-VEHICLE SERVICE

CONTROL VALVE REPLACEMENT

Remove or Disconnect (Figure 11)

1. Parking brake control rod (66) from transmission control equalizer.
2. Control valve outlet pipe.
3. Control valve inlet pipe.
4. Control valve exhaust pipe.
5. Control valve retaining bolts.
6. Control valve.

Install or Connect

1. Control valve.

NOTICE: See "Notice" on page 5C-1 of this section.

2. Control valve retaining bolts.

Tighten (Figure 11)

- Nuts to 12 N•m (106 lb. in.).

3. Control valve exhaust pipe.
4. Control valve inlet pipe.
5. Control valve outlet pipe.
6. Parking brake control rod (66) to transmission control equalizer.
   - Check the parking brake control rod adjustment. Refer to "Parking Brake Control Rod Adjustment" in this section.

RELAY VALVE REPLACEMENT

Remove or Disconnect (Figure 11)

1. Relay valve to control valve pipe at relay valve.
2. Control valve to relay valve pipe at relay valve.
3. Control valve exhaust pipe at relay valve.
4. Relay valve to steering gear line.
5. Power steering reservoir hose from relay valve.
6. Front inlet hose from relay valve.
7. Relay valve bolts.
8. Relay valve.

Install or Connect (Figure 11)

1. Relay valve.

NOTICE: See "Notice" on page 5C-1 of this section.

2. Relay valve bolts.

Tighten

- Bolts to 87 N•m (64 lb. ft.).

3. Front inlet hose to relay valve.
4. Power steering reservoir hose from relay valve.
5. Relay valve to steering gear line.
6. Control valve exhaust pipe at relay valve.
7. Control valve to relay valve pipe at relay valve.
8. Relay valve to control valve pipe at relay valve.

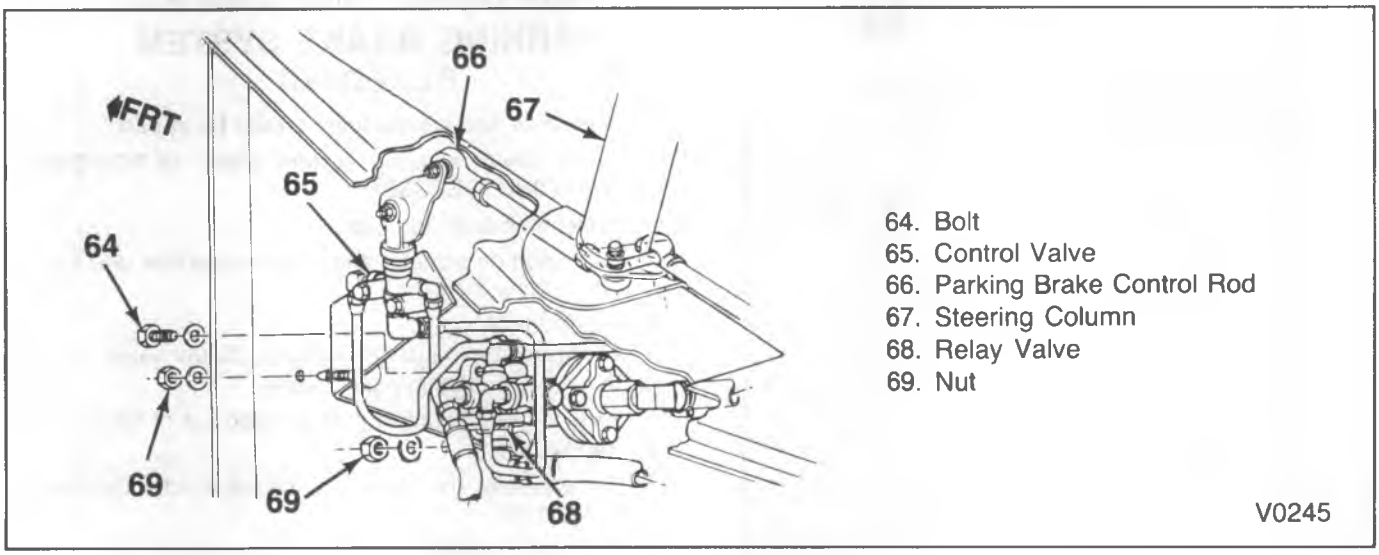

Figure 11 – Relay and Control Valve

ACTUATOR REPLACEMENT

NOTICE: Before attempting any removal, assure that all fluid pressure has been relieved from system.

Remove or Disconnect (Figure 12)

1. Rear parking brake cable from actuator shaft and bracket.
2. Actuator inlet pipe (75) and connector (74).
3. Bolts (70) retaining actuator to bracket.
4. Actuator (72) from bracket (76).

Install or Connect (Figure 12)

1. Actuator (72) into bracket (76).

NOTICE: See "Notice" on page 5C-1 of this section.

2. Bolts (70) to actuator (72).

   Tighten

   - Nuts to 40 N•m (30 lb. ft.).
3. Actuator inlet pipe (75) and connector (74).

   Tighten

   - Connector to 34 N•m (25 lb. ft.).
4. Rear parking brake cable to actuator shaft and bracket.
   - Check the parking brake adjustment. Refer to "Parking Brake Adjustment" in this section.

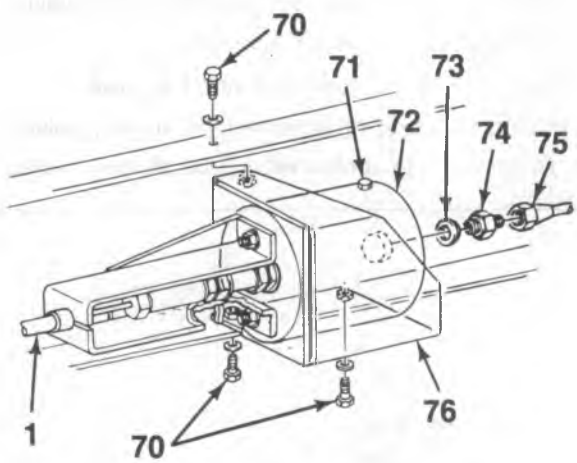

70. Bolt
71. Actuator Air Bleed
72. Actuator
73. Inlet Pipe Seal
74. Connector
75. Actuator Inlet Pipe
76. Actuator Bracket
1. Parking Brake Cable

V0587

Figure 12—Parking Brake Actuator

PARKING BRAKE CONTROL ROD ADJUSTMENT (Figure 13)

NOTICE: For steps 4 and 6 see "Notice" on page 5C-1 of this section.

1. Place parking brake control valve lever (79) in its park detent position.
2. Place selector in park.
3. Install rod end into the control valve lever.
4. Install nut.

   Tighten

   - Nut to 14 N•m (124 lb. in.).
5. Turn rod clockwise until it is in line with the transmission control equalizer lever hole.
6. Install nut.

   Tighten

   - Nut to 14 N•m (124 lb. in.).
   - Both jam nuts to 17 N•m (13 lb. ft.).

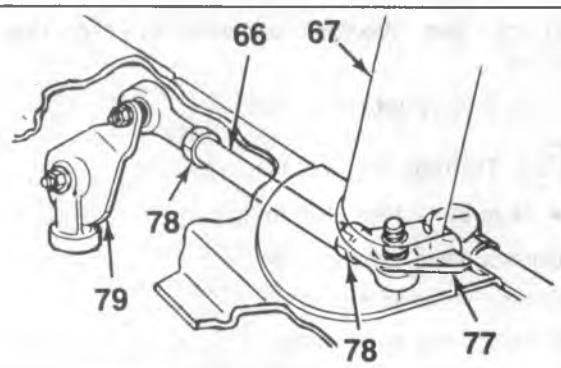

66. Parking Brake Control Rod
67. Steering Column
77. Transmission Control Equalizer
78. Jam Nut
79. Control Valve Lever

V0588

Figure 13—Parking Brake Control Rod

PARKING BRAKE SYSTEM BLEEDING

- Shift lever and control lever should be in park.
- Bleed power steering system. Refer to POWER STEERING (SEC. 3B1).
- Reset shift lever to neutral.

1. Open port on actuator and allow fluid to flow until no air remains in fluid.
2. Tighten port.
3. Crack open exhaust line fitting to control valve.
4. Put control valve in park position.
5. Allow small amount of fluid to bleed out of fitting.
6. Tighten fitting.
7. Cycle system and observe any noise which indicates trapped air.
8. Repeat as required.
   - System is filled properly when checked in neutral gear selection and manual parking brake applied with fluid level at 7.12 inches from top of reservoir.

SPECIFICATIONS

FASTENER TORQUE

Description		R	V	P
Parking Brake	—to Dash	12 N•m (100 in. lbs.)	12 N•m (100 in. lbs.)	—
	—to I.P. Kick Panel or Floorpan	17 N•m (150 in. lbs.)	17 N•m (150 in. lbs.)	25 N•m (18 lb. ft.)
	—Cabled Clips —Screws	17 N•m (150 in. lbs.)	—	10 N•m (89 lb. in.)
	—Bolts	17 N•m (150 in. lbs.)	—	10 N•m (89 lb. in.)
Proshaft Parking Brake —Adjusting Nut		—	—	40 N•m (30 lb. ft.)
—Bracket to Trans.		—	—	27 N•m (20 lb. ft.)
—Cable Clip to Frame		—	—	17 N•m (150 lb. ft.)
—Cable Clip to Dash		—	—	6 N•m (55 lb. in.)
—Cable Clip to Trans. Brkt.		—	—	27 N•m (20 lb. ft.)
—Flange Plate		—	—	40 N•m (30 lb. ft.)
—Drum		—	—	110 N•m (82 lb. ft.)
Automatic Parking Brake —Jam Nut to Cable Fitting		—	—	196 N•m (145 lb. ft.)
—Flange Nut to Jam Nut		—	—	196 N•m (145 lb. ft.)
—Control Valve to Bracket		—	—	12 N•m (106 lb. in.)
—Relay Valve Bolts		—	—	87 N•m (64 lb. ft.)
—Actuator Nuts		—	—	40 N•m (30 lb. ft.)
—Pipe Connectors		—	—	34 N•m (25 lb. ft.)
—Control Rod Jam Nuts		—	—	14 N•m (124 lb. in.)
—Control Rod Nuts		—	—	14 N•m (124 lb. in.)

GMTB-3107-2A

SECTION 6

ENGINE

CONTENTS

SUBJECT	PAGE
Engine, Driveability and Diagnosis	6A- 1
4.3 Liter V6	6A3-1
5.0 and 5.7 Liter V8	6A4-1
7.4 Liter V8	6A5-1
6.2 Liter Diesel	6A6-1
Engine Cooling	6B1-1
Radiators	6B2-1
Fuel System	6C- 1
Diesel Fuel Injection	6C2-1
Battery	6D1-1
Cranking System	6D2-1
Charging System	6D3-1
Ignition System	6D4-1
Engine Block Heater	6D5-1
Diesel Glow Plug Electrical System	6D6-1
Engine Wiring	6D7-1
Diesel Emissions	6E2-1
Exhaust	6F- 1
Vacuum Pumps	6H- 1

GENERAL INFORMATION

Following are brief outlines of the information contained in Section 6. Use them as a guide to help locate information more quickly.

SECTION 6A ENGINE, DRIVEABILITY AND DIAGNOSIS

This section contains information common to all engines, including:

- Use of gasket sealers.
- Diagnosis (diesel engines).
- Compression check procedure.
- Oil Leak Diagnosis.

SECTIONS 6A3 THROUGH 6A7 4.3 Liter V6, 5.0 AND 5.7 Liter V8, 7.4 Liter V8, 6.2 Liter DIESEL

These sections contain information for "on-vehicle" servicing of the basic engine, such as manifold, cylinder head, camshaft, and piston replacement.

Detailed repair information on components such as oil pump, cylinder head, etc. is not included. Refer to the "Light Duty Truck Unit Repair Manual" for this information.

SECTION 6B1 ENGINE COOLING

This section has information on cooling system components, including:

- Diagnosis
- Coolant Pump
- Fan and Fan Clutch
- Auxiliary Fan
- Belts
- Thermostat.
- Engine Cooling

SECTION 6B2 RADIATORS

This section contains information on radiators and shrouds, including aluminum radiator repair procedures.

SECTION 6C FUEL SYSTEM

This section contains information on diesel fuel system components, including:

- Accelerator controls
- Fuel tanks
- Air cleaners
- Fuel filters
- Fuel pump
- Fuel tank sending unit
- For fuel filter, pump, and sending unit information on TBI equipped vehicles, refer to the "Fuel and Emissions Service Manual."

SECTION 6C2 DIESEL FUEL INJECTION

This section contains information on the fuel injection system used on 6.2L diesel engines, including:

- Timing adjustment and other adjustment procedures.
- Injection nozzle replacement and testing.
- Injection pump replacement and repairs.

SECTION 6D1 BATTERY

This section contains information on batteries, battery mountings, etc.

SECTION 6D2 CRANKING SYSTEM

This section contains information on starter motors and related components.

SECTION 6D3 CHARGING SYSTEM

This section contains information on generators and related components.

SECTION 6D4 IGNITION SYSTEM

This section contains information on gasoline engine ignition systems, including distributors, spark plugs, etc.

SECTION 6D5 ENGINE BLOCK HEATER

This section contains information on engine block heaters.

SECTION 6D6 DIESEL GLOW PLUG ELECTRICAL SYSTEM

This section contains information on the diesel engine glow plug system.

SECTION 6D7 ENGINE WIRING

This section contains information on engine compartment wiring.

SECTION 6E2 DIESEL EMISSIONS

This section contains information on the emissions systems of 6.2L diesel engines, including component repair. Driveability diagnosis can be found in ENGINE, DRIVEABILITY AND DIAGNOSIS (SEC. 6A).

SECTION 6F EXHAUST

This section contains information on the exhaust system, including component replacement.

SECTION 6H VACUUM PUMPS

This section contains information on vacuum pumps including replacement procedures and diagnosis.

SECTION 6A

ENGINE, DRIVEABILITY AND DIAGNOSIS

CONTENTS

SUBJECT	PAGE
General Information	6A- 1
Statement on Cleanliness and Care	6A- 1
Tune-Up Information	6A- 2
Use of RTV Sealer and Anaerobic Gasket Eliminator	6A- 2
Replacing Engine Gaskets	6A- 2
Compression/Cranking Speed Checks	6A- 3
Gasoline Engine Compression Check	6A- 3
6.2L Diesel Engine Compression Check	6A- 3
Cranking Speed Check (6.2L Diesel Engine)	6A- 4
Diagnosis Charts	6A- 4
Diesel Engine Diagnosis	6A- 5
Diagnosis of "Water in Fuel" Light	6A- 7
Diagnosis of Noises	6A- 8
Diagnosis of Power Problems	6A-11
Diagnosis of Starting/Idling/Shutoff Problems	6A-13
Diagnosis of Poor Fuel Economy/Smoke/Oil/Odors	6A-15
Diagnosis of Spark Plugs	6A-17
Oil Leaks Diagnosis	6A-17
Special Tools	6A-18

NOTICE: All new General Motors vehicles are certified by the United States Environmental Protection Agency as conforming to the requirements of the regulations for the control of air pollution from new motor vehicles. This certification is contingent on certain adjustments being set to factory standards. In most cases, these adjustment points either have been permanently sealed and/or made inaccessible to prevent indiscriminate or routine adjustment in the field. For this reason the factory procedure for temporarily removing plugs, caps, etc., for purposes of servicing the product must be strictly followed, and, wherever practicable, returned to the original intent of the design. For vehicles sold in Canada and equipped with non-closed loop engines, also refer to the appropriate Canadian service manual supplement.

GENERAL INFORMATION

STATEMENT ON CLEANLINESS AND CARE

- An engine is a combination of many machined, honed, polished and lapped surfaces with very fine tolerances.
- Whenever valve train components, cylinder head, cylinder, crankshaft, or connecting rod components are removed for service, they should be retained in order. At the time of installation, they should be installed in the same locations and with the same mating surfaces as when removed.
- Anytime the air cleaner or TBI unit is removed, the intake opening must be covered. If a diesel engine is being serviced, the recommended cover (J 29664-2 or J 26996-1) should be used. This will protect against the entrance of foriegn material which could follow the intake passage into the cylinder and cause extensive damage when the engine is started.
- When any internal engine parts are serviced, care and cleanliness are important. A liberal coating of engine oil should be applied to friction areas during assembly to protect and lubricate the surfaces on initial operation. Throughout this section, it should be understood that proper cleaning and protection of machined surfaces and friction areas is part of the repair procedure. This is considered standard shop practice even if not specifically stated.

- On diesel engines, whenever the fuel injection pump or lines are removed or disconnected, care must be taken to prevent the entry of dirt into the pump, lines, and injectors. The entry of even a small amount of dirt or other foreign material into the fuel injection system may cause serious damage.
- It should be kept in mind, while working on the engine, that the 12-volt electrical system is capable of violent and damaging short circuits. When performing any work where electrical terminals could possibly be grounded, the ground cable of the battery should be disconnected at the battery.
- Battery cables should be disconnected before any major work is performed on the engine. Failure to disconnect cables may result in damage to wire harness or other electrical parts.
- Cover or otherwise protect exposed electrical connections to prevent damage from oil and fuel.
- When raising and supporting the engine for any reason, do not use a jack under the oil pan. Due to the small clearance between the oil pan and oil pump screen, jacking against the oil pan may cause it to be bent against the pump screen resulting in a damaged oil pickup unit.

TUNE-UP INFORMATION

All information required to tune up the vehicle's engine is given in the Engine Emission Control Label. This label is located in the engine compartment.

Information that can be found on the label includes:

- Engine displacement.
- Timing specifications.
- Spark plug gap.
- Timing adjustment procedures.
- Emission hose routing.
- Notes concerning factory preset and sealed idle air speed screw, and idle speeds being automatically controlled.

USE OF RTV SEALER AND ANAEROBIC GASKET ELIMINATOR

Two types of sealer are commonly used in engines covered by this manual. These are RTV sealer and anaerobic "gasket eliminator" sealer.

It is important that these sealers be applied properly and in the proper place to prevent oil leaks. THE TWO TYPES OF SEALER ARE NOT INTERCHANGEABLE. Use the sealer recommended in the procedure.

- RTV (room temperature vulcanizing) sealer is used where a non-rigid part is assembled to a rigid part. Common examples are oil pans and rocker arm covers.
- Anaerobic gasket eliminator hardens in the absence of air. This sealer is used where two rigid parts (such as castings) are assembled together. When two rigid parts are disassembled and no sealer or gasket is readily noticeable, the parts were probably assembled using gasket eliminator.

USING RTV SEALER

1. Don't use RTV where extreme temperatures are expected, such as exhaust manifold, head gasket or where gasket eliminator is specified.
2. When separating components sealed with RTV, use a rubber mallet and "bump" the part sideways to shear the RTV sealer. "Bumping" should be done at bends or reinforced areas to prevent distortion of parts. RTV iis weaker in shear (lateral) strength than in tensile (vertical) strength.

Important

- **Attempting to pry or pull components apart may cause damage to the part.**

3. Surfaces to be resealed must be clean and dry. Remove all traces of oil and RTV. Clean with a chlorinated solvent such as carburetor spray cleaner. Don't use petroleum cleaners such as mineral spirits; they leave a film onto which RTV won't stick.
4. Apply RTV to one of the clean surfaces. Use a bead size as specified in the procedure. Run the bead to the inside of any bolt holes. Do not allow the sealer in any blind threaded holes, as it may prevent the bolt from seating properly or cause damage when the bolt is tightened.
5. Assemble while RTV is still wet (within 3 minutes). Don't wait for RTV to skin over.
6. Torque bolts to specifications. Don't over-torque.

USING ANAEROBIC GASKET ELIMINATOR

1. Clean surfaces to be resealed with a chlorinated solvent to remove oil, grease and old material.
2. Apply a continuous bead of gasket eliminator to one flange.
3. Spread bead evenly with your finger to get a uniform coating on the complete flange.
4. Assemble parts in the normal manner and torque to specifications.

REPLACING ENGINE GASKETS

CAUTION: Composite type gaskets are used in some areas of the engine assembly. These gaskets have a thin metal core. Use caution when removing or handling composite gaskets to help avoid personal injury.

COMPRESSION/CRANKING SPEED CHECKS

GASOLINE ENGINE COMPRESSION CHECK

1. Disconnect the primary lead from the distributor or ignition coil. Refer to IGNITION SYSTEM (SEC. 6D4).
2. Remove all spark plugs.
3. Block the throttle plate and choke plate (if used) wide open.
4. Make sure the battery is fully charged.
5. Starting with the compression gage at zero, crank the engine through four compression strokes (four "puffs").
6. Make the compression check at each cylinder and record each reading.
7. If some cylinders have low compression, inject about 15 ml. (one tablespoon or about 3 squirts from a pump type oil can) of engine oil into the combustion chamber through the spark plug hole.
8. Minimum compression recorded in any one cylinder should not be less than 70 percent of highest cylinder, and no cylinder should read less than 690 kPa (100 psi). For example, if the highest pressure in any one cylinder is 1035 kPa (150 psi), the lowest allowable pressure for any other cylinder would be 725 kPa (105 psi). (1035 x 70% = 725) (150 x 70% = 105).
   - Normal — Compression builds up quickly and evenly to specified compression in each cylinder.
   - Piston Rings Leaking — Compression low on first stroke tends to build up on following strokes but does not reach normal. Improves considerably with addition of oil.
   - Valves Leaking — Low on first stroke. Does not tend to build up on following strokes. Does not improve much with addition of oil.
   - If two adjacent cylinders have lower than normal compression, and injecting oil into cylinders does not increase the compression, the cause may be a head gasket leak between the cylinders.

6.2L DIESEL ENGINE COMPRESSION CHECK

Tools Required:

J 29664-2 or J 26996-1 Intake Manifold Cover

J 26999 Compression Gage

J 26999-10 Compression Gage Adapter

1. Remove the air cleaner. Install J 29664-2 or J 26996-1 over the mouth of the intake manifold.
2. Disconnect the pink wire (1) from the fuel solenoid terminal of the injection pump. See figure 1.
3. Disconnect wires from glow plugs then remove all glow plugs.
4. Screw J 26999-10 into the glow plug hole of the cylinder that is being checked. Connect to J 26999 compression gage (figure 2).

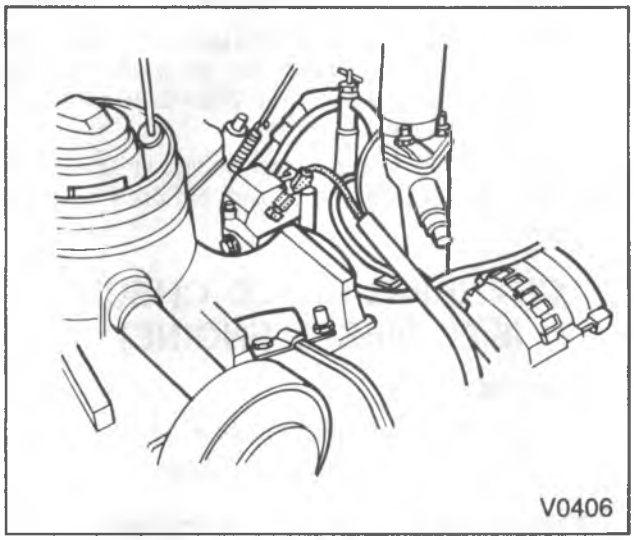

Figure 1—Fuel Solenoid Wire

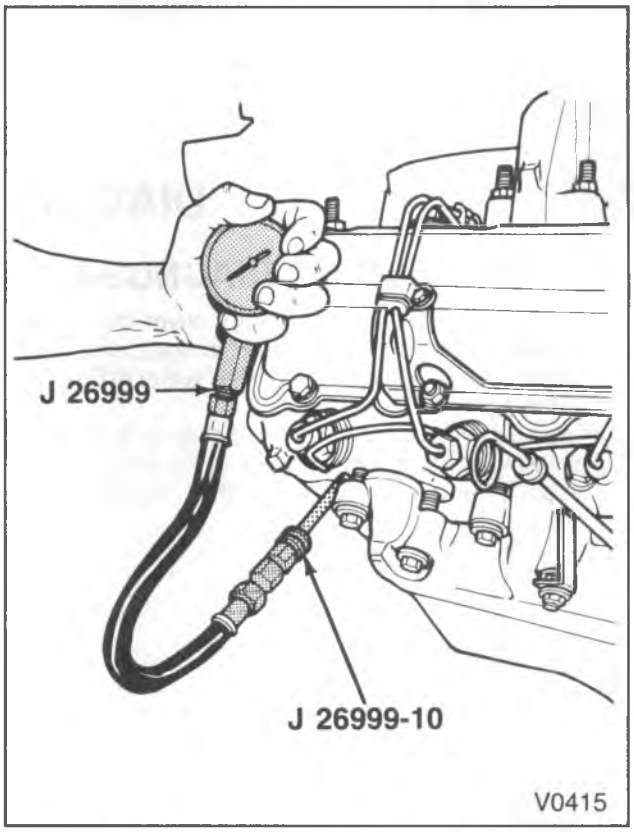

Figure 2—Checking Diesel Engine Compression

5. Make sure the batteries are fully charged, and the engine is fully warmed up (engine oil hot).
6. Crank the engine. Allow six "puffs" per cylinder.
7. Make the compression check at each cylinder and record the readings.

NOTICE: Do not add oil to any cylinder during a compression test as extensive engine damage can result.

8. The lowest reading cylinder should not be less than 80 percent of the highest reading cylinder. No cylinder should read less than 2625 kPa (380 psi).
   - Normal: Compression builds up quickly and evenly to specified compression on each cylinder. Reading should be in the 2625-2760 kPa (380-400 psi) range.
   - Leaking: Compression low on first strike tends to build up on following strokes but does not reach normal.

CRANKING SPEED CHECK (6.2L DIESEL ENGINE)

Tool Required:

J 26999 Compression Gage

J 26999-10 Compression Gage

Cranking speed is critical for a diesel engine to start, either hot or cold. Some tachometers are not accurate at cranking speed. An alternate method of checking cranking speed or determining the accuracy of a tachometer follows:

1. Screw J 26999-10 into any cylinder and connect J 26999 compression gage.
2. Disconnect the injection pump fuel solenoid lead (1) on the top of the injection pump. See figure 1.
3. Install the digital tachometer to be checked (if desired).
4. Depress the pressure release valve on the compression gage.
5. With aid of an assistant, crank the engine for 2 or 3 seconds to allow the starter to reach full speed, then without stopping, count the number of "puffs" at the compression gage that occur in the next 10 seconds. Multiply the number of "puffs" in the 10 second period by 12 and the resulting number will be the cranking speed in revolutions per minute (RPM).

   Example:

   10. seconds = 1/6 of a minute

   1. puff = 2 RPM

   RPM = No. of puffs x 2 x 6 or

   RPM = No. of puffs x 12

Minimum cranking speed on the 6.2L diesel engine is 100 RPM cold and 180 RPM hot. The actual cranking speed needed will vary depending on the condition of the engine (compression) and nozzles.

DIAGNOSIS CHARTS

DIESEL ENGINE DIAGNOSIS

The diesel engine diagnosis charts cover the areas of mechanical/maintenance, electrical/emissions, and air system (figures 3 and 4). Diagnosis for the "Water in Fuel" light is shown in figure 5.

Exhaust system performance complaints, such as excessive back pressure, are noticeable by their effect on engine performance. However, other malfunctioning vehicle components have similiar effects on engine performance and are characterized by the same symptoms or complaints. Therefore, it is necessary to refer to the engine diagnosis chart when attempting to diagnose these types of problems. Replacement of exhaust parts MUST be OEM standard, to be sure that engine performance is not reduced.

DIAGNOSIS OF DIESEL ENGINE

MOST LIKELY/POSSIBLE CAUSES

X = LIKELIEST CAUSES
• = POSSIBLE CAUSES

SYMPTOMS

1 LOW/LOSS OF POWER
2 HARD TO START
3 WILL NOT START-HOT
4 WILL NOT START-COLD
5 ENGINE STARTS, THEN STALLS
6 ENGINE MISFIRES OR BACKFIRES
7 ROUGH/ERRATIC IDLE
8 ENGINE WON'T SHUT-OFF
9 POOR ACCELERATION
10 ENGINE SPEED FLUXUATES
11 EXCESSIVE WHITE SMOKE
12 BLACK SMOKE AT LOAD (HOT)
13 BLACK SMOKE AT IDLE
14 EXCESSIVE ACCELERATION SMOKE
15 GREY SMOKE
16 BLUE SMOKE
17 EXCESSIVE LUBE OIL CONSUMPTION
18 EXCESSIVE FUEL CONSUMPTION
19 EXCESSIVE COOLANT CONSUMPTION
20 FUEL OR LUBE OIL LEAKS
21 LUBE OIL CONTAMINATED
22 COOLANT CONTAMINATED
23 HIGH COOLANT TEMPERATURE
24 HIGH OIL SUMP TEMPERATURE
25 NO HEAT FROM HEATER
26 CRANKCASE SLUDGE
27 LOW OIL PRESSURE
28 HIGH OIL PRESSURE
29 HIGH CRANKCASE PRESSURE
30 HIGH INLET RESTRICTION
31 MECHANICAL KNOCKS
32 FUEL KNOCKS (COMBUSTION NOISE)
33 EXCESSIVE ENGINE VIBRATION
34 SEIZED ENGINE COMPONENT
35 LOW CYLINDER COMPRESSION
36 ALL (8) GLOW PLUGS FAILED
37 (1) OR MORE GLOW PLUGS FAILED - NOT (8)
38 RELAY WILL NOT CYCLE-GLOW PLUGS O.K.
39 GLOW PLUG SYSTEM AND LIGHT INOP
40 WATER IN FUEL LIGHT ON/BLINKS

MECHANICAL/MAINTENANCE	1	2	3	4	5	6	7	8	9	10	11	12	13	14	15	16	17	18	19	20	21	22	23	24	25	26	27	28	29	30	31	32	33	34	35	36	37	38	39	40
GASKET BLOW-BY OR SEAL LEAKAGE	•								•		•				•		•	•	•		•	X	•		X				•				•		•					
FAULTY DAMPER/FLYWHEEL BALANCE																																	X							
VALVE LEAKAGE	•	•	•	•		•	•		•		•	•			•		•	•											•						X					
BROKEN, SCORED OR WORN PISTONS/RINGS	•	•	•	•			•		•		•	•	•		•	•		•			•			•		•			•		•			•	•					
INCORRECT MAIN OR ROD BEARING CLEARANCE																											•				•									
DAMAGED CRANKSHAFT OR MAIN/ROD BEARINGS						•																									X			X						
DAMAGED/WORN CAMSHAFT LOBES	•	•				•	•		•			•						•															•						
FAULTY LIFTER OR GUIDE PLATE	•					•	•				•																				•				•					
FAULTY PUSHROD OR ROCKER ARM	•					•	•											•													•									
WORN/MISALIGNED TIMING GEARS, CHAIN OR KEY(S)	•					•	•			•		•						•															•						
LOW CYLINDER COMPRESSION (380 PSI MIN.)	•	•	X	•		•	•		•		•	•			•			•															•						
OIL CHANGE INTERVAL																	•				•					X														
EXTERNAL INJECTION PUMP THROTTLE LINKAGE	•						•		•																															
TIMING RETARDED	•	•		•		•	•		•		X				•			•																						
TIMING ADVANCED	•	•		•		•	•					X	•	•				•														X					X			
STARTER CRANKING SPEED/BATTERIES (180 RPM MIN.)		•	X	•																																	•			
ENGINE MOUNTS/BOLTS OR FUEL LINE/OIL FILL TUBE CLAMPS																															•		•							
LONG IDLE PERIODS											•	•		•	•			•								•														
CRACKED CYLINDER HEAD OR WALL																			•															•	•					
MISSING PRECHAMBER(S)	•					•	•					•	•																				•		•					
ENGINE OVERLOADED/EXCESSIVE SPEED	•								•			•		•			X	X									•													
IMPROPER STARTING PROCEDURES		•		•																																				
DEBRIS/FLUID IN CYLINDER(S)																															•			•						

ELECTRICAL/EMISSIONS	1	2	3	4	5	6	7	8	9	10	11	12	13	14	15	16	17	18	19	20	21	22	23	24	25	26	27	28	29	30	31	32	33	34	35	36	37	38	39	40
INOPERATIVE GLOW PLUGS		•		X			•				•																													
FAULTY GLOW PLUG CONTROLLER/IP WIRE GROUNDS																																				X	•		X	
FAULTY ALTERNATOR DIODE/STARTER MOTOR WIRE CONNECTIONS																																				•		•	•	
INOPERATIVE GLOW PLUG CONTROLLER/RELAY		•		•																																•		•	•	
SHORTED OR OPEN GLOW PLUG INHIBITOR SWITCH																																				X		X	X	
NO VOLTAGE TO CONTROLLER (KEY ON)																																							•	
EGR VALVE STUCK OPEN	•											•		•				•																						
EPR VALVE STUCK CLOSED	•											•		•				•																						
FAULTY EGR/EPR SOLENOIDS	•											•		•				•																						
MISADJUSTED OR FAULTY THROTTLE POSITION SWITCH	•									•		•		•				•																						
HOUSING PRESSURE COLD ADVANCE SOLENOID OR SWITCH				•	•		•			•	X							•																						
FAULTY CRANKCASE DEPRESSION REGULATOR (CDR) VALVE																	•			•									•											
CRANKCASE DEPRESSION SYSTEM HOSE CONNECTIONS																	X			X	•								X											
MISADJUSTED OR FAULTY VACUUM REGULATOR VALVE																		•																						
TRANSMISSION CONVERTOR DOES NOT APPLY																		•																						
FAULTY VACUUM PUMP (21" HG MIN.)									•			•	•	•				•																						
FAULTY ENGINE SPEED SENSOR	•								•		•	•	•	•				•																						

AIR SYSTEM	1	2	3	4	5	6	7	8	9	10	11	12	13	14	15	16	17	18	19	20	21	22	23	24	25	26	27	28	29	30	31	32	33	34	35	36	37	38	39	40
RESTRICTED AIR INTAKE DUCTING OR MANIFOLD	X	•			•				•			•	•	•	•			•												•										
HIGH EXHAUST BACK PRESSURE	•				•				•			•		•	•			•											•											
THIN AIR IN HOT WEATHER OR HIGH ALTITUDE	•								•		•	•		•	•			•																						
PLUGGED AIR FILTER	X	•			•				•			X	•	•	•			•												X										
LOW AMBIENT TEMPERATURE				•							•															•		•												
HIGH AMBIENT TEMPERATURE	•																						•	•			•													

B-07942

Figure 3—Diesel Engine Diagnosis (1 of 2)

DIAGNOSIS OF DIESEL ENGINE

MOST LIKELY/POSSIBLE CAUSES

X = LIKELIEST CAUSES
• = POSSIBLE CAUSES

SYMPTOMS

1 LOW/LOSS OF POWER
2 HARD TO START
3 WILL NOT START HOT
4 WILL NOT START-COLD
5 ENGINE STARTS...THEN STALLS
6 ENGINE MISFIRES OR BACKFIRES
7 ROUGH/ERRATIC IDLE
8 ENGINE WON'T SHUT-OFF
9 POOR ACCELERATION
10 ENGINE SPEED FLUXUATES
11 EXCESSIVE WHITE SMOKE
12 BLACK SMOKE AT LOAD (HOT)
13 BLACK SMOKE AT IDLE
14 EXCESSIVE ACCELERATION SMOKE
15 GREY SMOKE
16 BLUE SMOKE
17 EXCESSIVE LUBE OIL CONSUMPTION
18 EXCESSIVE FUEL CONSUMPTION
19 EXCESSIVE COOLANT CONSUMPTION
20 FUEL OR LUBE OIL LEAKS
21 LUBE OIL CONTAMINATED
22 COOLANT CONTAMINATED
23 HIGH COOLANT TEMPERATURE
24 HIGH OIL SUMP TEMPERATURE
25 NO HEAT FROM HEATER
26 CRANKCASE SLUDGE
27 LOW OIL PRESSURE
28 HIGH OIL PRESSURE
29 HIGH CRANKCASE PRESSURE
30 HIGH INLET RESTRICTION
31 MECHANICAL KNOCKS
32 FUEL KNOCKS (COMBUSTION NOISE)
33 EXCESSIVE ENGINE VIBRATION
34 SEIZED ENGINE COMPONENT
35 LOW CYLINDER COMPRESSION
36 ALL (8) GLOW PLUGS FAILED
37 (1) OR MORE GLOW PLUGS FAILED
38 RELAY WILL NOT CYCLE-GLOW PLUGS O.K.
39 GLOW PLUG SYSTEM AND LIGHT INOP
40 WATER IN FUEL LIGHT ON/BLINKS

MECHANICAL/MAINTENANCE	1	2	3	4	5	6	7	8	9	10	11	12	13	14	15	16	17	18	19	20	21	22	23	24	25	26	27	28	29	30	31	32	33	34	35	36	37	38	39	40
GASKET BLOW-BY OR SEAL LEAKAGE	•								•		•				•		•	•	•		•	X	•		X				•				•		•					
FAULTY DAMPER/FLYWHEEL BALANCE																																	X							
VALVE LEAKAGE	•	•	•	•		•	•		•		•	•			•		•	•											•						X					
BROKEN, SCORED OR WORN PISTONS/RINGS	•	•	•	•			•		•		•	•	•		•	•		•			•			•		•			•		•			•	•					
INCORRECT MAIN OR ROD BEARING CLEARANCE																											•				•									
DAMAGED CRANKSHAFT OR MAIN/ROD BEARINGS						•																									X			X						
DAMAGED/WORN CAMSHAFT LOBES	•	•				•	•		•			•						•															•						
FAULTY LIFTER OR GUIDE PLATE	•					•	•				•																				•				•					
FAULTY PUSHROD OR ROCKER ARM	•					•	•											•													•									
WORN/MISALIGNED TIMING GEARS, CHAIN OR KEY(S)	•					•	•			•		•						•															•						
LOW CYLINDER COMPRESSION (380 PSI MIN.)	•	•	X	•		•	•		•		•	•			•			•															•						
OIL CHANGE INTERVAL																	•				•					X														
EXTERNAL INJECTION PUMP THROTTLE LINKAGE	•						•		•																															
TIMING RETARDED	•	•		•		•	•		•		X				•			•																						
TIMING ADVANCED	•	•		•		•	•					X	•	•				•														X					X			
STARTER CRANKING SPEED/BATTERIES (180 RPM MIN.)		•	X	•																																	•			
ENGINE MOUNTS/BOLTS OR FUEL LINE/OIL FILL TUBE CLAMPS																															•		•							
LONG IDLE PERIODS											•	•		•	•			•								•														
CRACKED CYLINDER HEAD OR WALL																			•															•	•					
MISSING PRECHAMBER(S)	•					•	•					•	•																				•		•					
ENGINE OVERLOADED/EXCESSIVE SPEED	•								•			•		•			X	X									•													
IMPROPER STARTING PROCEDURES		•		•																																				
DEBRIS/FLUID IN CYLINDER(S)																															•			•						

ELECTRICAL/EMISSIONS	1	2	3	4	5	6	7	8	9	10	11	12	13	14	15	16	17	18	19	20	21	22	23	24	25	26	27	28	29	30	31	32	33	34	35	36	37	38	39	40
INOPERATIVE GLOW PLUGS		•		X			•				•																													
FAULTY GLOW PLUG CONTROLLER/IP WIRE GROUNDS																																				X	•		X	
FAULTY ALTERNATOR DIODE/STARTER MOTOR WIRE CONNECTIONS																																				•		•	•	
INOPERATIVE GLOW PLUG CONTROLLER/RELAY		•		•																																•		•	•	
SHORTED OR OPEN GLOW PLUG INHIBITOR SWITCH																																				X		X	X	
NO VOLTAGE TO CONTROLLER (KEY ON)																																							•	
EGR VALVE STUCK OPEN	•											•		•				•																						
EPR VALVE STUCK CLOSED	•											•		•				•																						
FAULTY EGR/EPR SOLENOIDS, ECM, OR MAP SENSOR	•											•		•				•																						
MISADJUSTED OR FAULTY THROTTLE POSITION SWITCH	•									•		•		•				•																						
HOUSING PRESSURE COLD ADVANCE SOLENOID OR SWITCH				•	•		•			•	X							•																						
FAULTY CRANKCASE DEPRESSION REGULATOR (CDR) VALVE																	•			•									•											
CRANKCASE DEPRESSION SYSTEM HOSE CONNECTIONS																	X			X	•								X											
MISADJUSTED OR FAULTY VACUUM REGULATOR VALVE																		•																						
TRANSMISSION CONVERTOR DOES NOT APPLY																		•																						
FAULTY VACUUM PUMP (21" HG MIN.)									•			•	•	•				•																						
FAULTY ENGINE SPEED SENSOR	•								•		•	•	•	•				•																						

AIR SYSTEM	1	2	3	4	5	6	7	8	9	10	11	12	13	14	15	16	17	18	19	20	21	22	23	24	25	26	27	28	29	30	31	32	33	34	35	36	37	38	39	40
RESTRICTED AIR INTAKE DUCTING OR MANIFOLD	X	•			•				•			•	•	•	•			•												•										
HIGH EXHAUST BACK PRESSURE	•				•				•			•		•	•			•											•											
THIN AIR IN HOT WEATHER OR HIGH ALTITUDE	•								•		•	•		•	•			•																						
PLUGGED AIR FILTER	X	•			•				•			X	•	•	•			•												X										
LOW AMBIENT TEMPERATURE				•							•															•		•												
HIGH AMBIENT TEMPERATURE	•																						•	•			•													

B-07943

Figure 4—Diesel Engine Diagnosis (2 of 2)

DIAGNOSIS OF "WATER IN FUEL" LIGHT

PROBLEM	POSSIBLE CAUSE	CORRECTION
Intermittent Light	Water in fuel filter.	Drain water from the fuel filter.
Light Stays On With Engine Running (Temperature Above Freezing)	Fuel filter is clogged or contains water.	Drain the fuel filter. If no water is drained and the light stays on, replace the filter element.
Light Stays On With Engine Running (Temperature Below Freezing)	Fuel filter is clogged with ice.	Drain the fuel filter. If no water is drained, open the air bleed and check for fuel pressure. Replace the filter element if there is no pressure.
Light Comes On At High Speed Or During Heavy Acceleration	Plugged fuel filter.	Replace the filter element.
Light Stays On Continuously And Engine Stalls And Will Not Restart (After Initial Start-Up)	Fuel filter or lines plugged.	Replace the filter element or check the lines.
Light Stays On Continuously And Engine Stalls And Will Not Restart (After Refueling)	Large amounts of water pumped into the tank.	Purge the fuel tank.

GMTB-0922-2L

DIAGNOSIS OF NOISES

PROBLEM	POSSIBLE CAUSE	CORRECTION
High-Pitched Whine During Cranking (Before Engine Fires) But Engine Cranks And Fires Normally	Distance too great between starter pinion and flywheel.	Remove shims at the starter mount. Refer to IGNITION SYSTEM (SEC. 6D4).
High-Pitched Whine After The Engine Fires As Key Is Being Released. The Engine Cranks And Fires Normally. This Complaint Is Often Diagnosed As "Starter Hang-In" Or "Solenoid Weak".	Distance too small between starter pinion and flywheel. Flywheel runout contributes to the intermittent nature of the problem.	Add shims at the starter mount. Refer to IGNITION SYSTEM (SEC. 6D4).
A Loud "Whoop" After The Engine Fires But While The Starter Is Still Held Engaged. Sounds Like A Siren If The Engine Is Revved While The Starter Is Engaged.	Usually due to a worn starter motor clutch.	Remove the starter motor and check the starter clutch. Refer to the Light Duty Truck Unit Repair Manual.
A "Rumble", "Growl", Or (In Severe Cases) A "Knock" As The Starter Is Coasting Down To A Stop After Starting The Engine	Usually due to a bent or unbalanced starter armature.	Remove the starter motor and check the armature. Refer to the Light Duty Truck Unit Repair Manual.
Engine Noisy On Initial Start Up But Only Lasts A Few Seconds	1. Hydraulic lifter bleed down. This condition is normal. Oil drains from the lifters which are holding the valves open when the engine is not running. It will take a few seconds for the lifter to fill after the engine is started. 2. Improper oil viscosity. 3. Fuel pump.	1. None needed. 2. Install proper oil viscosity for expected temperatures. Refer to Owner's Manual. 3. Replace pump.
Intermittently Noisy On Idle Only, Disappearing When Engine Speed Is Increased	1. Dirt in hydraulic lifter. 2. Pitted or damaged lifter check ball.	1. Disassemble and clean. 2. Replace the hydraulic lifter.
Engine Knocks Cold And Continues For Two To Three Minutes. Knock Increases With Torque	1. EFE equipped engines may have EFE valve knock. 2. Flywheel contacting splash shield. 3. Loose or broken torsional damper or drive pulleys. 4. Excessive piston to bore clearance. 5. Bent connecting rod.	1. Replace EFE valve. 2. Reposition splash shield. 3. Tighten or replace as necessary. 4. Replace piston; inspect bore. 5. Replace connecting rod.

GMTB-3162-2A

DIAGNOSIS OF NOISES (CONT.)

PROBLEM	POSSIBLE CAUSE	CORRECTION
Noisy At Idle, Becoming Louder As Engine Speed Is Increased To 1500 RPM	1. This noise is not connected to hydraulic valve lifter malfunction. It becomes most noticeable in the vehicle at 10 to 15 mph in "L" (Low) range, or 30 to 35 mph in "D" (Drive) range and is best described as a "hashy" sound. At slow idle, it may be entirely gone or appear as a light ticking noise in one or more valves. It is caused by one or more of the following: • Badly worn or scuffed valve tip and rocker arm pad • Excessive valve stem to guide clearance. • Excessive valve seat runout. • Off-square valve spring. • Excessive valve face runout. • Valve spring damper clicking on rotator. 2. Off-square valve spring. Occasionally this noise can be eliminated by rotating the valve spring and valve. Crank engine until noisy valve is off its seat. Rotate spring. This will rotate valve. Repeat until valve is quiet. If correction is obtained, check for off-square valve spring.	1. Repair as necessary. 2. If the valve spring is more than 1.6 mm (1/16-inch) off-square, it should be replaced.
Noisy At Slow Idle Or With Hot Oil; Quiet At Higher Engine Speeds Or With Cold Oil	High hydraulic lifter leak down rate.	Replace the hydraulic lifter.
Engine Knocks At Idle Hot	1. Loose or worn drive belts. 2. A/C compressor or generator bearing. 3. Fuel pump. 4. Valve train. 5. Improper oil viscosity. 6. Excessive piston pin clearance. 7. Connecting rod alignment. 8. Insufficient piston to bore clearance. (Cold engine piston knock usually disappears when the cylinder's spark plug wire is grounded out. Cold engine piston knock which disappears in 1.5 minutes should be considered acceptable.) 9. Loose torsional damper.	1. Tension and/or replace as necessary. 2. Replace as necessary. 3. Replace pump. 4. Refer to "Valve Train Noise" in this chart. 5. Install proper oil viscosity for expected temperatures. Refer to Owner's Manual. 6. Install new piston, pin and/or connecting rod as needed. 7. Check and replace rods as necessary. 8. Hone cylinder and fit new piston, if required. 9. Torque damper or replace worn parts.
Noisy At High Vehicle Speeds, Quiet At Low Speeds	1. High oil level — Oil level above the "Full" mark allows crankshaft counterweights to churn the oil into foam. When foam is pumped into the lifters, they will become noisy since a solid column of oil is required for proper operation. 2. Low oil level — Oil level below the "Add" mark allows the oil pump to pump air at high speeds, which results in noisy lifters. 3. Oil pan bent against oil pump pickup screen. 4. Oil pump pickup screen bent or loose.	1. Drain oil to proper level. 2. Add oil as needed. 3. Repair. 4. Repair.
Noisy Regardless Of Engine Speed.	1. Incorrect valve adjustment (excessive lash) (engines with adjustable valve lash.)	1. Adjust as specified.

GMTB-0908-2L

DIAGNOSIS OF NOISES (CONT.)

PROBLEM	POSSIBLE CAUSE	CORRECTION
Noisy Regardless Of Engine Speed. (Cont.)	2. Excessive valve lash. Check for valve lash by turning the engine so the piston in that cylinder is on TDC of the firing stroke. If valve lash is present, the pushrod can be freely moved up and down a certain amount with the rocker arm held against the valve. Excessive lash can be caused by: a. Worn pushrod upper end ball. b. Bent pushrod. c. Improper lubrication of the pushrod. d. Loose or damaged rocker arm. e. If pushrod and rocker arm are OK, trouble in the hydraulic lifter is indicated.	2. Repair engine as needed. a. Replace pushrod and rocker arm. b. Replace pushrod. c. Replace pushrod and rocker arm. Check lubrication system feed to the pushrod. d. Replace rocker arm. e. Replace hydraulic lifter.
Engine Has Light Knock Hot In Light Load Conditions.	1. Faulty EST or ESC system. 2. Improper timing. 3. Poor quality fuel. 4. Loose torque converter bolts. 5. Exhaust leak at manifold. 6. Excessive rod bearing clearance.	1. Refer to "Fuel and Emissions Service Manual" if using X-9132, or to the rear of this manual if using ST330-91. 2. Adjust to specifications. 3. Use fuel of recommended grade. 4. Tighten bolts. 5. Tighten bolts and/or replace gaskets. 6. Replace bearings as necessary.
Engine Has Heavy Knock Hot With Torque Applied.	1. Broken balancer or pulley hub. 2. Loose torque converter bolts. 3. Accessory belts too tight or nicked. 4. Exhaust system touching vehicle. 5. Flywheel cracked or loose flywheel rivets. 6. Excessive main bearing clearance. 7. Excessive rod bearing clearance.	1. Replace parts as necessary. 2. Tighten bolts. 3. Replace and/or tension to specs. as necessary. 4. Reposition as necessary. 5. Replace flywheel. 6. Repair as necessary. 7. Repair as necessary.
Valve Train Noise	1. Low oil pressure. 2. Loose rocker arm attachments. 3. Worn rocker arm and/or pushrod. 4. Broken valve spring. 5. Sticking valves. 6. Lifters worn, dirty or faulty. 7. Camshaft worn or faulty. 8. Worn valve guides.	1. Repair as necessary. (See diagnosis for "Low Oil Pressure" in this chart.) 2. Inspect as necessary. 3. Replace as necessary 4. Replace spring. 5. Free valves. 6. Refer to other hydraulic lifter-related causes and corrections in this chart. 7. Replace camshaft. 8. Repair as necessary.
Vibrating Or Rattling From Exhaust System	Loose and/or misaligned exhaust components.	Align, then tighten connections. Check for damaged hangers or mounting brackets and clamps.
Exhaust Leakage And/Or Noise	1. Leakage at exhaust component joints and couplings. 2. Improperly installed or misaligned exhaust system. 3. Exhaust manifold cracked or broken. 4. Leak between exhaust manifold or cylinder head. 5. Damaged or worn exhaust seals or packing. 6. Burned or rusted out exhaust pipe heat tube extension. 7. Burned or rusted out exhaust pipe. 8. Burned or blown out muffler. 9. Broken or loose exhaust clamps and/or brackets.	1. Tighten clamps or couplings to specified torque. 2. Align, then tighten connections. 3. Replace the manifold. 4. Tighten the manifold to cylinder head nuts and bolts to specifications. 5. Replace the seals or packings as necessary. 6. Replace the heat tube extensions as required. 7. Replace the exhaust pipe. 8. Replace the muffler assembly. 9. Repair or replace as necessary.

GMTB-3161-2A

DIAGNOSIS OF POWER PROBLEMS

PROBLEM	POSSIBLE CAUSE	CORRECTION
Engine Hesitates During Normal Acceleration *Hesitates During Cold Engine Operation	1. *EFE system malfunction.	1. Check operation. Refer to the "Fuel and Emission Service Manual" if using X-9132, or to the rear of this manual if using ST330-91.
	2. Ignition timing misadjusted.	2. Adjust timing. See Emission Control Information Label on vehicle.
	3. Distributor vacuum or mechanical advance malfunctioning.	3. Check operation. Refer to IGNITION SYSTEM (SEC. 6D4).
Engine Has Less Than Normal Power At Normal Acceleration	1. Ignition system malfunction.	1. Check ignition system. Refer to IGNITION SYSTEM (SEC. 6D4).
	2. Ignition timing misadjusted.	2. Adjust timing. See Emission Control Information Label on vehicle.
	3. Plugged air cleaner element.	3. Replace element.
	4. Exhaust system restricted.	4. Check for restrictions. See diagnosis for "Restricted Exhaust System" in this chart.
	5. EFE system malfunction.	5. Check operation. Refer to the "Fuel and Emission Service Manual" if using X-9132, or to the rear of this manual if using ST330-91.
	6. Transmission malfunction.	6. Refer to TRANSMISSION AND CLUTCH (SEC. 7).
	7. Fuel filter(s) partially plugged.	7. Inspect fuel filter(s). Replace as necessary.
	8. Faulty fuel pump, or leaking or restricted fuel lines.	8. Check fuel pump pressure and volume. Replace pump if necessary. Inspect fuel lines for leaks and restrictions.
Less Than Normal Power On Heavy Acceleration Or At High Speed	1. Ignition system malfunction.	1. Check ignition system. Refer to IGNITION SYSTEM (SEC. 6D4).
	2. Ignition timing misadjusted.	2. Adjust timing. See Emission Control Information Label on vehicle.
	3. Distributor mechanical advance malfunctioning.	3. Check operation. Refer to IGNITION SYSTEM (SEC. 6D4).
	4. Plugged air cleaner element.	4. Replace element.
	5. Exhaust system restricted.	5. Check for restrictions. See diagnosis for "Restricted Exhaust System" in this chart.
	6. EFE system malfunction.	6. Check operation. Refer to the "Fuel and Emission Service Manual" if using X-9132, or to the rear of this manual if using ST330-91.
	7. Transmission malfunction.	7. Refer to TRANSMISSION AND CLUTCH (SEC. 7).

GMTB-3160-2A

DIAGNOSIS OF POWER PROBLEMS (CONT.)

PROBLEM	POSSIBLE CAUSE	CORRECTION
Engine Surges	1. Ignition system malfunction.	1. Check ignition system. Refer to IGNITION SYSTEM (SEC. 6D4).
	2. Distributor mechanical advance malfunctioning.	2. Check operation. Refer to IGNITION SYSTEM (SEC. 6D4).
	3. Exhaust system restricted.	3. Check for restrictions. Correct as necessary. See diagnosis for "Restricted Exhaust System" in this chart.
	4. EFE system malfunction.	4. Check operation. Refer to "Fuel and Emissions Service Manual" if using X-9132 or to the rear of this manual if using ST330-91.
	5. Contaminated fuel.	5. Check for water or excessive alcohol in fuel.
	6. Fuel filter(s) partially plugged.	6. Inspect fuel filter(s). Replace as necessary.
	7. Faulty fuel pump or leaking or restricted fuel lines.	7. Check fuel pump pressure and volume. Replace pump if necessary. Inspect fuel lines for leaks and restrictions.
Fuel Starvation	1. Fuel filter(s) plugged.	1. Inspect fuel filter(s). Replace as necessary.
	2. Fuel lines leaking, restricted or misrouted.	2. Repair/replace, clean, or reroute as required.
	3. Faulty fuel pump.	3. Check fuel pump pressure and volume. Replace pump if necessary.
Restricted Exhaust System	1. "Kinked" exhaust tubing.	1. If possible, repair the damaged condition, otherwise replace the component.
	2. Restriction inside the muffler.	2. If restriction is suspected, remove the muffler and visually check it. Replace muffler if condition is doubtful.
	3. End of tail pipe obstruction.	3. Remove the obstruction, or if end is crimped, straighten outlet.
	4. Plugged catalytic converter (may result from serious engine malfunction).	4. Replace the catalytic converter.

GMTB-3159-2A

DIAGNOSIS OF STARTING/IDLING/SHUTOFF PROBLEMS

PROBLEM	POSSIBLE CAUSE	CORRECTION
Engine Will Not Turn Over	1. Battery, cranking system or other electrical problem. 2. Liquid in combustion chamber. 3. Seized engine.	1. Refer to IGNITION SYSTEM (SEC. 6D4). 2. Remove with suction gun. 3. Repair.
Engine Cranks Normally — Will Not Start Or Starts Hard	1. Improper starting procedure used. 2. Ignition system malfunction. 3. Engine loaded with fuel. (Improper starting procedure used). 4. No fuel. 5. Restricted exhaust system. 6. Low compression due to stuck or burned valves, sticking piston rings, blown head gasket, etc.	1. Check with the customer to determine if proper starting procedure, outlined in the Owner's Manual, is used. 2. Check ignition system. Refer to IGNITION SYSTEM (SEC. 6D4). 3. Check with the customer to determine if proper starting procedure, outlined in Owner's Manual, is used. 4. Inspect fuel filter(s) for plugging. Replace as necessary. Check fuel pump pressure and volume. Replace pump if necessary. Inspect fuel lines for leaks and restrictions. 5. Repair. See diagnosis for "Restricted Exhaust System" in this chart. 6. Perform a compression test, as outlined in this section. Repair engine as necessary.
Engine Starts — Will Not Keep Running	1. Improper starting procedure used. 2. Idle speed too low. 3. Air leaks at intake manifold gasket. Vacuum hoses disconnected or installed improperly. 4. Not enough fuel.	1. Check with the customer to determine if proper starting procedure, outlined in Owner's Manual, is used. 2. Adjust idle speed. See Emission Control Information Label on vehicle. 3. Use a pressure oil can to spray light oil or kerosene around manifold to head mounting surfaces. If engine RPM changes, torque intake manifold bolts to specification. If necessary, replace the intake manifold gasket(s). Check condition and routing of vacuum hoses. Correct or replace as necessary. Refer to Emission Control Information Label on vehicle for correct routing. 4. Inspect fuel filter(s) for being partially plugged. Replace as necessary. Check fuel pump pressure and volume. Replace pump if necessary. Inspect fuel lines for leaks and restrictions.

GMTB-3158-2A

DIAGNOSIS OF STARTING/IDLING/SHUTOFF PROBLEMS (CONT.)

PROBLEM	POSSIBLE CAUSE	CORRECTION
Engine Idles Abnormally (Too Fast Or Too Slow)	1. Idle speed misadjusted.	1. Adjust idle speed. See Emission Control Information Label.
	2. Throttle linkage or throttle shaft sticking or binding.	2. Check throttle linkage and throttle shaft(s) for smooth and free operation. Clean with suitable solvent. Replace throttle body if necessary.
	3. Air leaks at or at intake manifold gasket. Vacuum hoses disconnected or improperly installed.	3. Use a pressure oil can to spray light oil or kerosene around manifold to head mounting surfaces. If engine RPM changes, torque intake manifold bolts to specification. If necessary, replace the intake manifold gasket(s). Check condition and routing of vacuum hoses. Correct or replace as necessary. Refer to Emission Control Information Label on vehicle for correct routing.
	4. Ignition timing misadjusted.	4. Adjust timing. See Emission Control Information Label on vehicle.
	5. Distributor vacuum or mechanical advance malfunctioning.	5. Check operation. Refer to IGNITION SYSTEM (SEC. 6D4).
	6. Restricted air cleaner element.	6. Replace if necessary.
Rough Idle	1. Fuel, ignition system or emission system problem.	1. Refer to "Fuel And Emissions Service Manual" if using X-9132 or to the rear of this manual if using ST330-91.
	2. Uneven cylinder compression.	2. Perform a compression test, as outlined in this section. Repair engine as necessary.
	3. Bent pushrod or broken valve spring.	3. Repair.
	4. Faulty engine mount.	4. Repair or replace.
Engine Diesels (After Run) Upon Shut Off	1. Minimum (base) idle speed misadjusted.	1. Adjust minimum (base) idle speed. See Emission Control Information Label on vehicle.
	2. Air leaks at intake manifold gasket(s). Vacuum hoses disconnected or improperly installed.	2. Use pressure oil can to spray light oil or kerosene around manifold to head mounting surfaces. If engine RPM changes, torque intake manifold bolts to specification. If necessary, replace the intake manifold gasket(s). Check condition and routing of vacuum hoses. Correct or replace as necessary. Refer to Emission Control Information Label for correct routing.
	3. PCV system malfunctioning.	3. Check PCV system. Clean or replace PCV valves and hoses as necessary.
	4. Ignition timing retarded (causes throttle valve to be opened farther than normal to obtain correct idle speed).	4. Adjust timing. See Emission Control Information Label.

GMTB-3192-2A

DIAGNOSIS OF POOR FUEL ECONOMY/SMOKE/OIL/ODORS

PROBLEM	POSSIBLE CAUSE	CORRECTION
Poor Gas Mileage *Black Smoke From Tail Pipe	1. Customer driving habits.	1. Run mileage test, with customer driving if possible. Make sure engine has at least 2,000-3,000 miles (3 200-4 800 km) for the "break-in" period.
	2. Wrong speedometer gear.	2. Check odometer against measured mile. Replace speedometer gear if necessary. Refer to TRANSMISSION AND CLUTCH (SEC. 7).
	3. Low tire pressure or incorrect tire size.	3. Inflate tires to specifications and use correct tire sizes. Refer to label on driver's door.
	4. Transmission malfunction or in wrong gear.	4. Refer to TRANSMISSION AND CLUTCH (SEC. 7).
	5. Fuel leaks.	5. Inspect fuel tank, fuel lines and fuel pump for any fuel leakage.
	6. *Plugged air cleaner element.	6. Replace element.
	7. Ignition system malfunction.	7. Check ignition system. Refer to IGNITION SYSTEM (SEC. 6D4).
	8. Ignition timing misadjusted.	8. Adjust timing. See Emission Control Information Label.
	9. Distributor vacuum or mechanical advance malfunctioning.	9. Check operation. Refer to IGNITION SYSTEM (SEC. 6D4).
	10. Air leaks at intake manifold gasket. Vacuum hoses disconnected or improperly installed.	10. Use a pressure oil can to spray light oil or kerosene around manifold to head mounting surfaces.
	Air leaks at intake manifold gasket(s). Vacuum hoses disconnected or improperly installed.	If engine RPM changes, torque intake manifold bolts to specification. If necessary, replace the intake manifold gasket(s). Check condition and routing of vacuum hoses. Correct or replace as necessary. Refer to Emission Control Information Label on vehicle for correct routing.
	11. Engine in need of service.	11. Check engine compression.
	12. Restricted exhaust system.	12. Check for restrictions and correct as necessary. See diagnosis for "Restricted Exhaust System" in this chart.
Low Oil Pressure	1. Slow idle speed.	1. Set idle speed to specifications.
	2. Incorrect or faulty oil pressure switch or sensor.	2. Replace with correct/new switch or sensor.
	3. Incorrect or faulty oil pressure gage.	3. Replace with correct/new gage.
	4. Improper oil viscosity.	4. Replace with proper oil. Refer to Owner's Manual.
	5. Diluted engine oil.	5. Change engine oil and filter. Repair cause of dilution (rich mixture, etc.).
	6. Oil pump worn or dirty.	6. Clean pump and replace worn parts as necessary.
	7. Plugged oil filter.	7. Replace filter and oil.
	8. Oil pickup screen loose or plugged.	8. Clean or replace screen as necessary.
	9. Hole in oil pickup tube.	9. Replace pickup tube.

GMTB-3157-2A

DIAGNOSIS OF POOR FUEL ECONOMY/SMOKE/OIL/ODORS (CONT.)

PROBLEM	POSSIBLE CAUSE	CORRECTION
Low Oil Pressure (Cont.)	10. Excessive bearing clearance. 11. Cracked, porous or plugged oil galleries. 12. Oil gallery plugs missing or mis-installed.	10. Replace as necessary 11. Repair or replace block. 12. Install plugs or repair as necessary.
Blue Smoke	Usually caused by oil burning in the combustion chambers.	See diagnosis for "Excessive Oil Loss" in this chart.
White Smoke	Usually caused by water vapor, which is a normal by-product of combustion. Usually seen on cold days.	None required.
Excessive Oil Loss	1. Improper reading of dipstick. 2. External oil leaks. 3. Improper oil viscosity. 4. Continuous high speed driving and/or severe usage. 5. Crankcase ventilation or PCV system malfunction. 6. Valve guides and/or valve stem seals worn, or seals missing. 7. Piston rings not seated. 8. Broken or worn piston rings. 9. Piston improperly installed.	1. Check oil with vehicle on a level surface and allow adequate drain down time. 2. Tighten bolts and/or replace gaskets and seals as necessary. 3. Use recommended viscosity for prevailing temperature. Refer to Owner's Manual. 4. Continuous high speed operation and/or severe usage will normally cause decreased oil mileage. 5. Check PCV system. Clean or replace PCV valves and hoses as necessary. 6. Ream guides and install oversize service valves and/or new valve stem seals. 7. Allow adequate time for rings to seat. 8. Replace broken or sorn rings as necessary. 9. Replace piston or repair as necessary.
Gasoline Odor	1. Fuel feed or vapor return line leaking. 2. Leak in fuel tank. 3. Disconnected or leaking fuel tank vent lines or hoses to canister(s). 4. Purge lines not connected, improperly routed, plugged or pinched. 5. Carbon canister(s) loaded. 6. Faulty fuel tank fill cap.	1. Repair/replace as required. Refer to the "Fuel and Emission Manual" if using X-9132, or to the rear of this manual if using ST330-91. 2. Purge tank and repair or replace tank as required. Refer to the "Fuel and Emission Manual" if using X-9132, or to the rear of this manual if using ST330-91. 3. Connect, repair or replace lines as required. Refer to the "Fuel and Emission Manual" if using X-9132, or to the rear of this manual if using ST330-91. 4. Connect, clean or reroute lines as required. Refer to Emission Control Information Label on vehicle for correct routing. 5. Compare weight of canister with a new one. Replace if necessary. Refer to the "Fuel and Emission Manual" if using X-9132, or to the rear of this manual if using ST330-91. 6. Install new fuel filler cap. Be sure to use a cap designed for gasoline and evaporation systems.

GMTB-3156-2A

DIAGNOSIS OF SPARK PLUGS

PROBLEM	POSSIBLE CAUSE	CORRECTION
Brown To Grayish-Tan Deposits And Slight Electrode Wear	Normal wear.	Clean, regap, reinstall.
Dry, Fluffy Black Carbon Deposits	1. Sticking EFE valve or manifold heat valve. 2. Poor ignition system output.	1. Replace if necessary. 2. Check the distributor coil connections, as discussed in IGNITION SYSTEM (SEC. 6D4) or refer to the "Fuel & Emission Manual" if using X-9132, or to the rear of this manual if using ST330-91.
Wet, Oily Deposits With Very Little Electrode Wear.	1. "Break-in" of new or recently overhauled engine. 2. Excessive valve stem to guide clearance. 3. Worn intake valve seals.	1. Degrease, clean and reinstall the plugs. 2. Refer to specific engine section for procedure. 3. Replace the seals.
Red, Brown, Yellow And White Colored Coatings On Insulator. Engine Misses Intermittently Under Severe Operating Conditions.	By-products of combustion.	Clean, regap and reinstall. If heavily coated, replace.
Colored Coatings Heavily Deposited On The Portion Of The Plug Projecting Into The Combustion Chamber And On The Side Facing The Intake Valve.	Leaking seals if the condition is found in only one or two cylinders.	Check the seals. Replace if necessary. Clean, regap and reinstall the plugs.

GMTB-3155-2M

OIL LEAK DIAGNOSIS

Most oil leaks are easily located and repaired by visually ıding the leak and replacing or repairing the necessary ırts. On some occasions a fluid leak may be difficult to cate or repair. The following procedure may help in cating and repairing most leaks.

FINDING THE LEAK

1. Identify the fluid, determine whether it is engine oil, automatic transmission fluid, power steering fluid, etc.
2. At what point is the fluid leaking from? After running the vehicle at normal operating temperature, park the vehicle over a large sheet of paper. After a few minutes, you should be able to find the approximate loccation of the leak by the drippings on the paper.
3. Visually check around the suspected component. Check around all gasket mating surfaces for leaks. A mirror is useful for finding leaks that are hard to reach.
4. If the leak still cannot be found, it may be necessary to clean the suspected area with a degreaser, steam or spray solvent. Clean the area, then dry the area. Operate the vehicle for several miles at normal operating temperature and varying speed. After operating the vehicle, visually check the suspected component. If you still cannot find the leak, try using the powder or black light and dye method.

POWDER METHOD

1. Clean the suspected area.
2. Apply an aerosol-type powder (such as foot powder) on the suspected area.
3. operate the car under normal operating conditions.
4. Visually inspect the suspected component.You should be able to trace the leak path over the white powder surface to the source.

BLACK LIGHT AND DYE METHOD

A dye and light kit is available for finding leaks. Refer to the manufacturer's directions when using the kit.

1. Pour specified amount of dye into leaking component.
2. Operate vehicle under normal operating conditions as directed in the kit.
3. Direct the light toward the suspected area. The dyed fluid will appear as a yellow path leading to the source.

REPAIRING THE LEAK

Once the leak has been pinpointed and traced back to its source, the cause of the leak must be determined in order for it to be repaired properly. If a gasket is replaced, but the sealing flange is bent, the new gasket will not repair the leak. The bent flange must be repaired also. before attempting to repair a leak, check to be sure that the following conditions are correct as they may cause a leak.

GASKET LEAKS

Check for:

- High fluid level or high oil pressure.
- Plugged ventilation filter or valve.
- Improperly tightened fasteners or dirty/damaged threads.
- Warped flanges or sealing surface.
- Scratches, burrs or other damage to the sealing surface.
- Damaged or worn gasket.
- Cracking or porosity of the component.
- Improper sealant used, or no sealant where required.

SEAL LEAKS

Check for:

- High fluid level or high oil pressure.
- Plugged ventilation filters, or valve.
- Damaged seal bore (scratched, burred or nicked).
- Damaged or worn seal.
- Improper installation.
- Cracks in component.
- Shaft surface scratched, nicked or damaged.
- Loose or worn bearing causing excess seal wear.

SPECIAL TOOLS

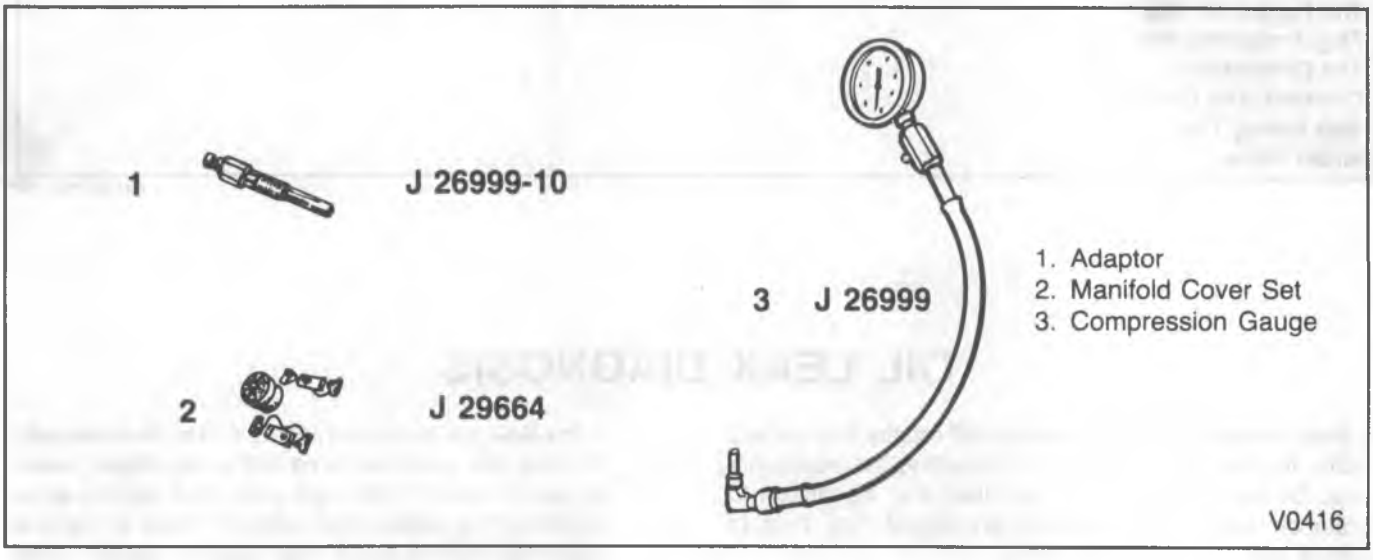

SECTION 6A3

4.3 LITER V6

NOTICE: When fasteners are removed, always reinstall them at the same location from which they were removed. If a fastener needs to be replaced, use the correct part number fastener for that application. If the correct part number fastener is not available, a fastener of equal size and strength (or stronger) may be used. Fasteners that are not reused, and those requiring thread locking compound will be called out. The correct torque value must be used when installing fasteners that require it. If the above conditions are not followed, parts or system damage could result.

CONTENTS

SUBJECT	PAGE
Description	6A3- 2
Engine Lubrication	6A3- 2
On-Vehicle Service	6A3- 5
Rocker Arm Cover Replacement	6A3- 5
Rocker Arm and Pushrod Replacement	6A3- 5
Valve Adjustment	6A3- 6
Valve Stem Seal and Valve Spring Replacement	6A3- 6
Intake Manifold Replacement	6A3- 8
Hydraulic Lifter Replacement	6A3- 9
Rocker Arm Stud Replacement	6A3- 9
Exhaust Manifold Replacement	6A3-11
Cylinder Head Replacement	6A3-12
Torsional Damper and Front Crankshaft Seal Replacement	6A3-13
Front Cover Replacement	6A3-14
Oil Pan Replacement	6A3-14
Oil Pump Replacement	6A3-15
Rear Crankshaft Oil Seal Replacement	6A3-16
Rear Crankshaft Oil Seal Retainer Replacement	6A3-16
Measuring Camshaft Lobe Lift	6A3-17
Camshaft Replacement	6A3-17
Connecting Rod and Piston Replacement	6A3-19
Main Bearing Replacement	6A3-21
Oil Filter Adapter and Oil Filter Bypass Valve Replacement (Models With Engine Oil Cooler)	6A3-22
Crankshaft Replacement	6A3-23
Flywheel Replacement	6A3-23
Engine Mountings	6A3-23
Engine Replacement	6A3-25
Specifications	6A3-27
Special Tools	6A3-30

DESCRIPTION

4.3L engines are 90-degree V6 type, overhead valve, water cooled engines with a cast-iron block and cylinder heads.

The crankshaft is supported by four precision-insert main bearings, with crankshaft thrust taken at the number four (rear) bearing.

The camshaft is supported by four plain-type bearings and is chain-driven. Motion from the camshaft is transmitted to the valves by hydraulic lifters, pushrods and ball-type rocker arms. The valve guides are integral in the cylinder head on the light duty version, and are a non-serviceable press fit on the heavy duty version which is available on the P-models.

The connecting rods are forged steel, with precision-insert-type crankshaft bearings. The piston pins are a press-fit in the connecting rods.

The pistons are cast aluminum alloy with a lower compression ratio on the heavy duty version. The piston pins are a floating-fit in the piston.

ENGINE LUBRICATION

Lubrication schematics are shown in figures 1 and 2. The gear-type oil pump is driven from the distributor shaft, which is gear-driven from the camshaft. Oil is drawn into the oil pump through a pickup screen and pipe.

Pressurized oil is routed to the oil filter. In case of excessive oil pressure, a bypass valve is provided. Filtered oil flows into the main gallery and then to the camshaft and crankshaft bearings. The valve lifter oil gallery supplies oil to the valve lifters. Oil flows from the hydraulic lifters through the hollow pushrods to the rocker arms. Oil from the overhead drains back to the crankcase through oil drain holes.

The timing chain is drip-fed from the front camshaft bearing. The pistons and piston pins are lubricated by oil splash.

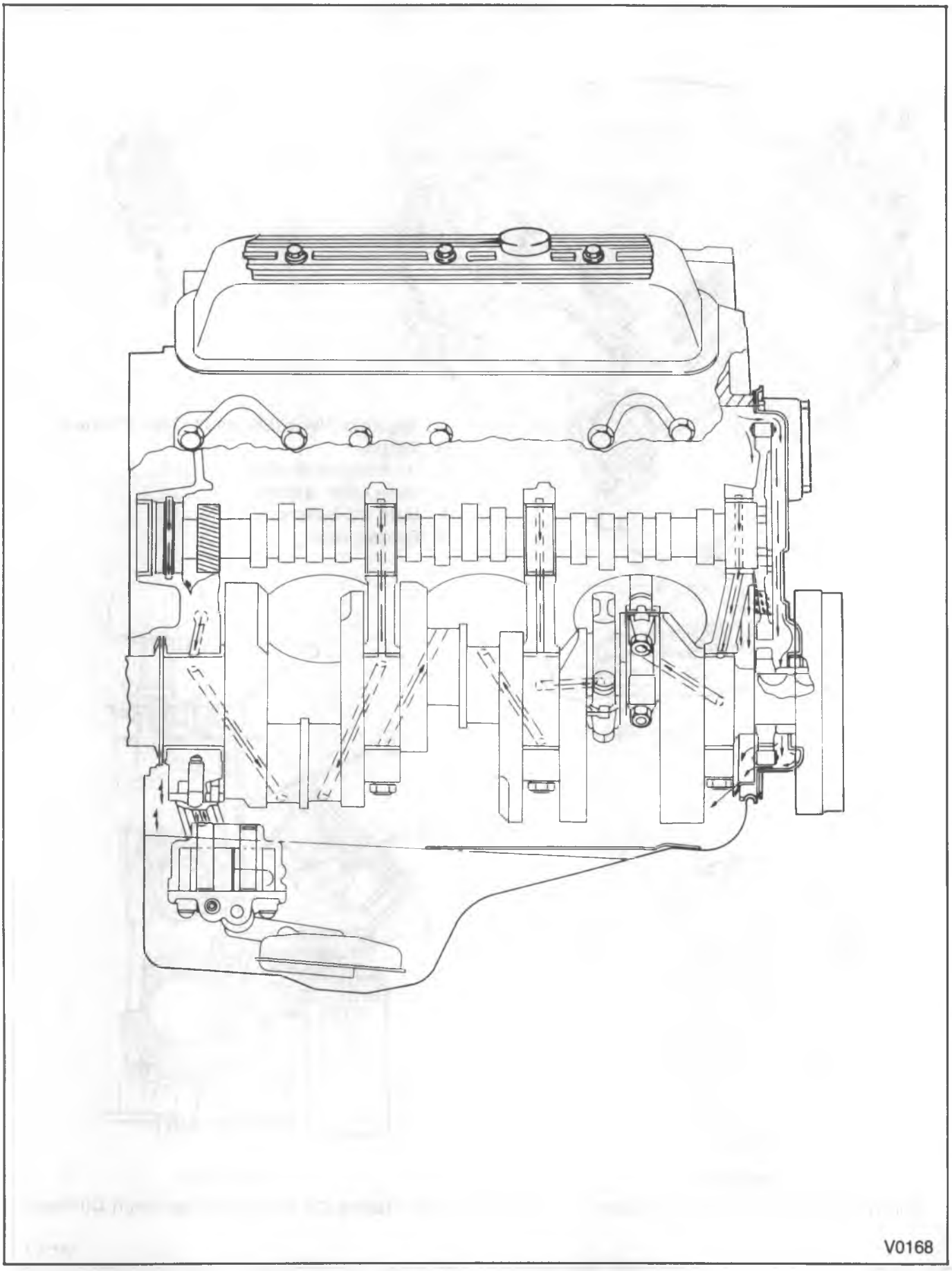

Figure 1—Engine Lubrication Diagram

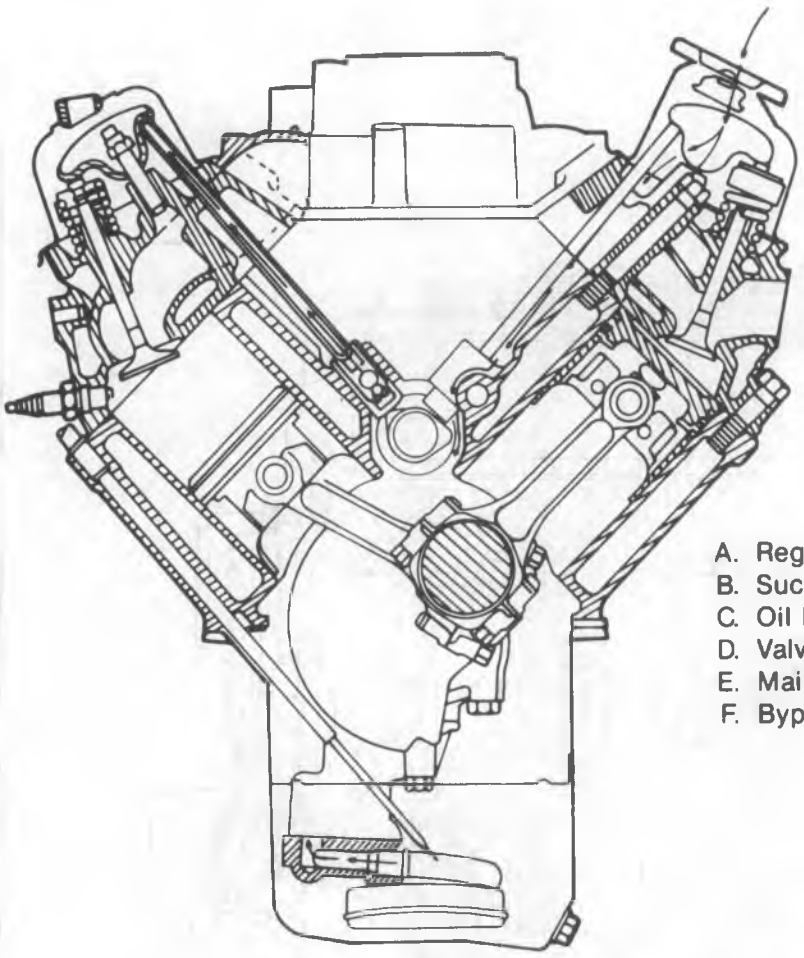

Front View

A. Regulator Valve (Shown In Open Position)
B. Suction
C. Oil Pressure Switch
D. Valve Lifter Gallery
E. Main Oil Gallery
F. Bypass Valve

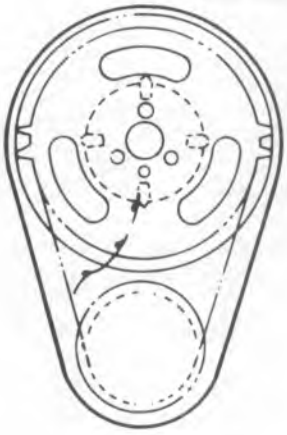

Front View
Showing Path Of Oil To Timing Chain.

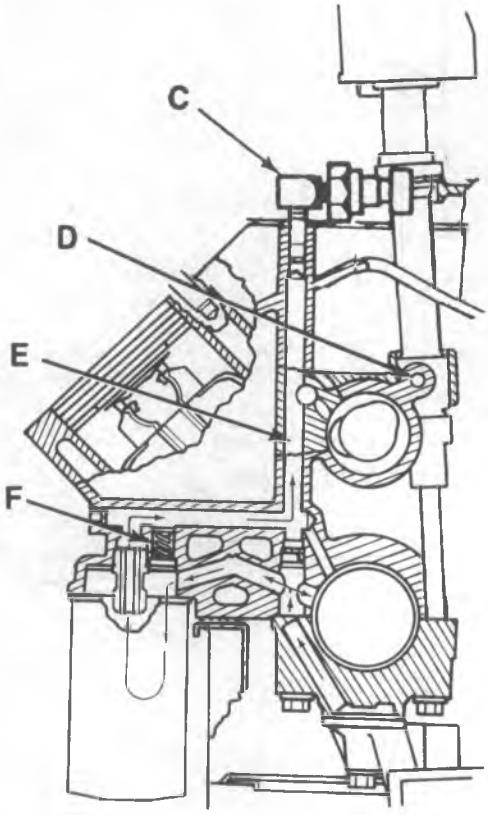

Rear View
Showing Main Gallery, Oil Filter And Crankshaft Oil Feed.

V0501

Figure 2—Engine Lubrication Diagram

ON-VEHICLE SERVICE

ROCKER ARM COVER REPLACEMENT

REMOVAL – LEFT SIDE

Remove or Disconnect (Figure 3)

1. Negative battery cable.
2. Engine cover.
3. Air cleaner.
4. Spark plug wires and clip at the rear of the cylinder head.
5. Wiring harnesses at the rocker arm cover; move out of the way.
6. Rocker arm cover bolts.
7. Rocker arm cover and gasket.

REMOVAL – RIGHT SIDE

Remove or Disconnect (Figure 3)

1. Negative battery cable.
2. Engine cover.
3. Air cleaner and stove pipe.
4. Oil fill tube.
5. Crankcase ventilation pipe at the rocker arm cover.
6. Rocker arm cover bolts (700).
7. Rocker arm cover (701) and gasket (702).

CLEANING AND INSPECTION

Clean

- All traces of old gasket from the rocker arm cover and cylinder head.

Inspect

- Rocker arm cover sealing surface for distortion and damage. Replace if necessary.

INSTALLATION – LEFT SIDE

Install or Connect (Figure 3)

1. Rocker arm cover (701) and gasket (702).

NOTICE: See "Notice" on page 6A3-1 of this section.

2. Rocker arm cover bolts (700) and washers.

   Tighten

   - Rocker arm cover bolts to 10 N•m (90 in. lbs.).
3. Wiring harness to the rocker cover.
4. Spark plug wires, clips and brackets.
5. Air cleaner.
6. Engine cover.
7. Negative battery cable.

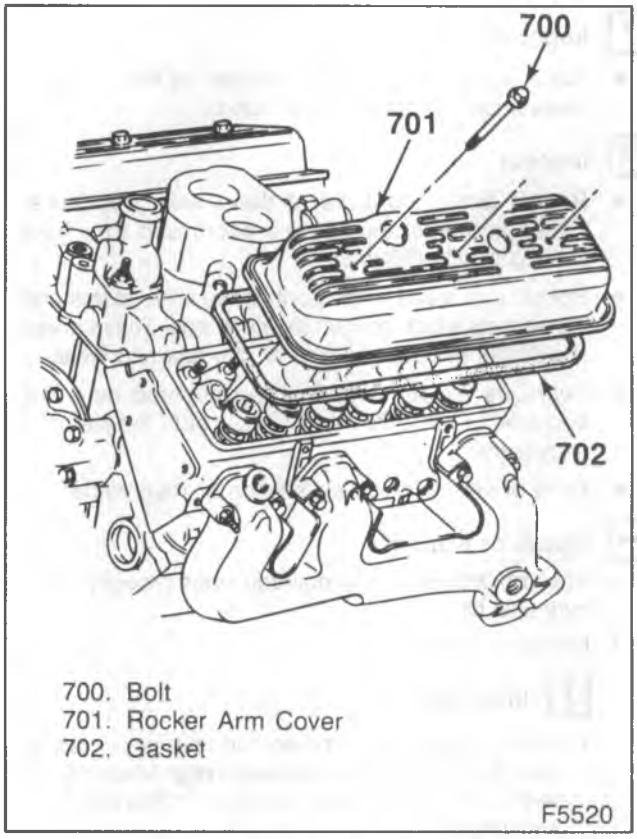

Figure 3 – Rocker Arm Cover

INSTALLATION – RIGHT SIDE

Install or Connect (Figure 3)

1. Rocker arm cover (701) and gasket (702).

NOTICE: See "Notice" on page 6A3-1 of this section.

2. Rocker arm cover bolts and washers.

   Tighten

   - Rocker arm cover bolts to 10 N•m (90 in. lbs.).
3. Crankcase ventilation pipe.
4. Oil fill tube.
5. Engine cover.
6. Negative battery cable.

ROCKER ARM AND PUSHROD REPLACEMENT

Remove or Disconnect

1. Rocker arm cover. Refer to "Rocker Arm Cover Replacement" in this section.
2. Rocker arm nut.
   - If only the pushrod is to replaced, back the rocker arm nut off until the rocker arm can be swung away from the pushrod, then pull the pushrod out.

3. Rocker arm with ball.
4. Pushrod.

Important

- Store used components in order so they can be reassembled in the same location.

Inspect

- Rocker arms and balls at their mating surfaces. These surfaces should be smooth and free from scoring or other damage.
- Rocker arm areas which contact the valve stems and the sockets which contact the pushrods. These areas should be smooth and free of damage and wear.
- Pushrods for bending. Roll the pushrod on a flat surface to determine if it is bent. Replace if necessary.
- Ends of the pushrods for scoring or roughness.

Install or Connect

1. Pushrod. Make sure the pushrod seats properly in the hydraulic lifter.
2. Rocker arm with ball.

   Important

   - When new rocker arms and/or balls are installed, coat their bearing surfaces with High Viscosity Oil with Zinc (GM part number 12345501 or equivalent).
3. Rocker arm nuts.

   Adjust

   - Valves. Refer to "Valve Adjustment" in this section.
4. Rocker arm cover. Refer to "Rocker Arm Cover Replacement" in this section.

VALVE ADJUSTMENT

1. Remove the rocker arm cover. Refer to "Rocker Arm Cover Replacement" in this section.
2. Crank the engine until the mark on the torsional damper lines up with the "0" mark on the timing tab and the engine in the number one firing position. This may be determined by placing fingers on the number one valve as the mark on the damper comes near "0" mark on the timing tab. If the rocker arms are not moving, the engine is in the number one firing position. If the rocker arms move as the mark comes up to the timing tab, the engine is in the number four firing position and should be turned over one more time to reach the number one position.
3. With the engine in the number one firing position as determined above, the following valves may be adjusted:
   - Exhaust: 1, 5, 6.
   - Intake: 1, 2, 3.

   (Even-numbered cylinders are in the right bank; odd-numbered cylinders are in the left bank, when viewed from the rear of the engine.)
4. Back out the adjusting nut until lash is felt at the pushrod then turn in the adjusting nut until all lash is removed. This can be determined by rotating the pushrod while turning the adjusting nut (figure 4). When the play has been removed, turn the adjusting nut in one full additional turn (to center the lifter plunger).
5. Crank the engine one revolution until the timing tab "0" mark and vibration damper mark are again in alignment. This is the number four firing position. The following valves may be adjusted:
   - Exhaust: 2, 3, 4.
   - Intake: 4, 5, 6.
6. Install the rocker arm cover. Refer to "Rocker Arm Cover Replacement" in this section.

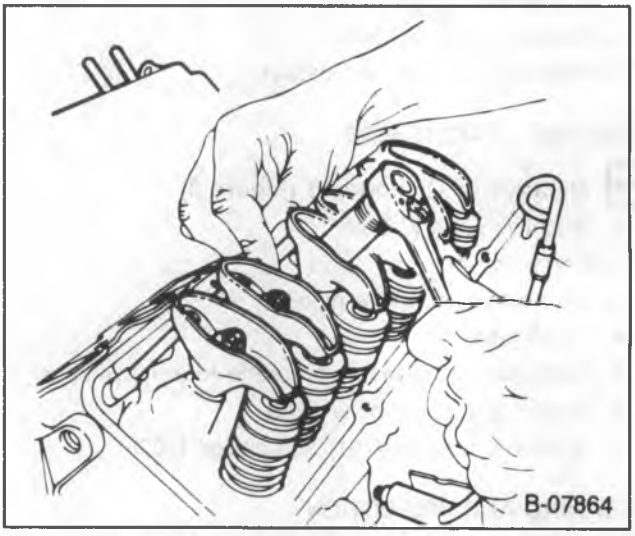

Figure 4—Adjusting the Valves

VALVE STEM SEAL AND VALVE SPRING REPLACEMENT

Remove or Disconnect (Figures 5 and 6)

Tools Required:

J 23590 Air Adapter

J 5892-C Spring Compressor

1. Rocker arm cover. Refer to "Rocker Arm Cover Replacement" in this section.
2. Rocker arms. Refer to "Rocker Arm and Pushrod Replacement" in this section.
3. Spark plugs.
4. Valve keepers (20).
   - Install J 23590 into the spark plug hole.
   - Apply compressed air to hold the valves in place.
   - Install a rocker arm nut (figure 6).
   - Use J 5892-C to compress the valve spring (figure 6).
   - Remove the valve keepers.
   - Carefully release the spring tension. Remove J 5892-C.

5. Cap (21) and/or rotator (28), shield (22) and spring (26) with damper (25).
6. O-ring seal (23), and seal (24) (intake valve only).

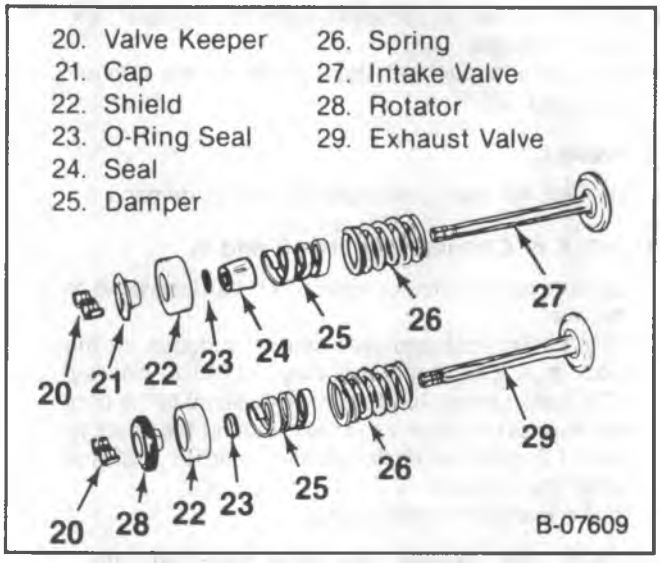

Figure 5—Valves and Components

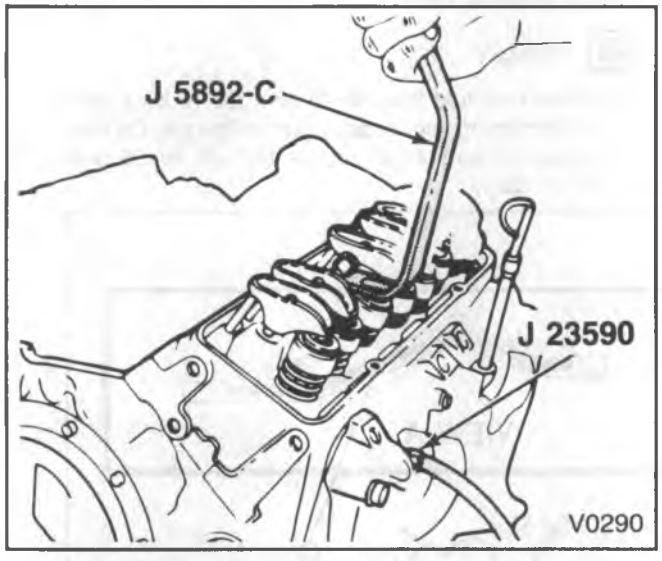

Figure 6—Compressing the Valve Springs

Install or Connect (Figures 5, 6 and 7)

Tools Required:

J 23590 Air Adapter

J 5892-C Spring Compressor

J 23738-A Vacuum Pump

1. New seal (24) (intake valve only). Install the seal over the intake valve stem and seat it against the head.
2. Spring (26) with damper (25), shield (22) and cap (21) and/or rotator (28).
3. New O-ring seal (23) and valve keepers (20).
   - With air pressure applied to the cylinder with J 23590, compress the spring with J 5892-C (figure 6).
   - Lubricate the O-ring seal with engine oil. Install the seal on the valve stem. Make sure the seal is not twisted.
   - Install the valve keepers. Use grease to hold them in place.
   - Carefully release the spring pressure. Make sure the valve keepers stay in place.
   - Remove J 5892-C and J 23590.
   - Check each O-ring seal for leakage (figure 7).
     - Place the suction cup furnished with J 23738-A over the shield.
     - Connect J 23738-A to the suction cup and apply vacuum. Watch the vacuum pump gage. No air should be able to leak past the seal. If the seal will not hold vacuum, it may have been damaged or improperly installed.
4. Spark plugs.
5. Rocker arms. Refer to "Rocker Arm and Pushrod Replacement" in this section.

Adjust

- Valves. Refer to "Valve Adjustment" in this section.

6. Rocker arm cover. Refer to "Rocker Arm Cover Replacement" in this section.

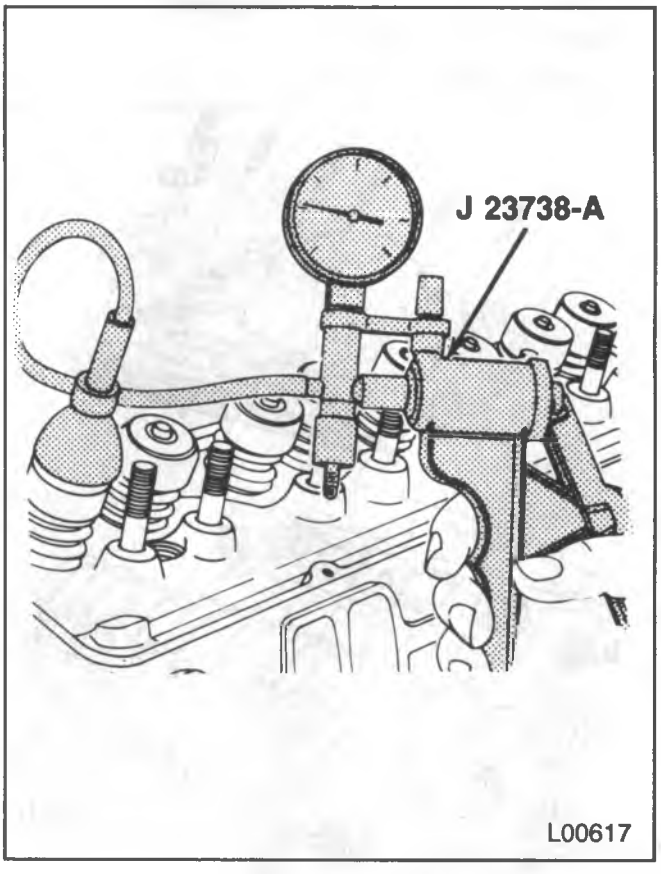

Figure 7—Testing the Valve Seals

INTAKE MANIFOLD REPLACEMENT

Remove or Disconnect

1. Negative battery cable.
2. Engine cover.
3. Air cleaner and heat stove tube.

- Drain the cooling system.

4. Distributor. Refer to ENGINE ELECTRICAL (SEC. 6D).
5. Accelerator, cruise control and TVS cables and bracket as equipped.
6. Cruise control transducer (if equipped).
7. Air conditioning compressor; set aside (if equipped).
8. Generator bracket at the manifold.
9. Fuel and vacuum lines and electrical connections at the TBI unit and manifold.
10. Oil fill tube.
11. Upper radiator hose.
12. Coil wires.
13. EGR vacuum line.
14. Sensors with bracket on right side.
15. Wiring harness on right side; move out of the way.
16. Transmission dipstick tube (if equipped).
17. Intake manifold bolts.
18. Intake manifold and gaskets.

Clean

- Old gasket and RTV from the block, heads, and intake manifold. Remove all RTV that is loose or will cause interference at assembly.
- Excessive carbon deposits from the exhaust and EGR passages.
- Excessive scale and deposits from the coolant passages.

Inspect

- Manifold for cracks and gasket surface damage.

Install or Connect (Figures 8 and 9)

1. Gaskets to the cylinder head. (Port blocking plate to the rear.)
2. RTV to the front and rear sealing surfaces on the block (figure 8). Apply a 5 mm (3/16-inch) bead of RTV (part number 1052366 or equivalent) to the front and rear of the block as shown. Extend the bead 13 mm (1/2-inch) up each cylinder head to seal and retain the gaskets.
3. Intake manifold to the engine.

NOTICE: See "Notice" on page 6A3-1 of this section.

4. Intake manifold bolts.

Tighten

- Intake manifold bolts to 48 N•m (35 ft. lbs.). Use the tightening sequence shown in figure 9. On final tightening sequence, torque bolt #9 to 56 N•m (41 ft. lbs.).

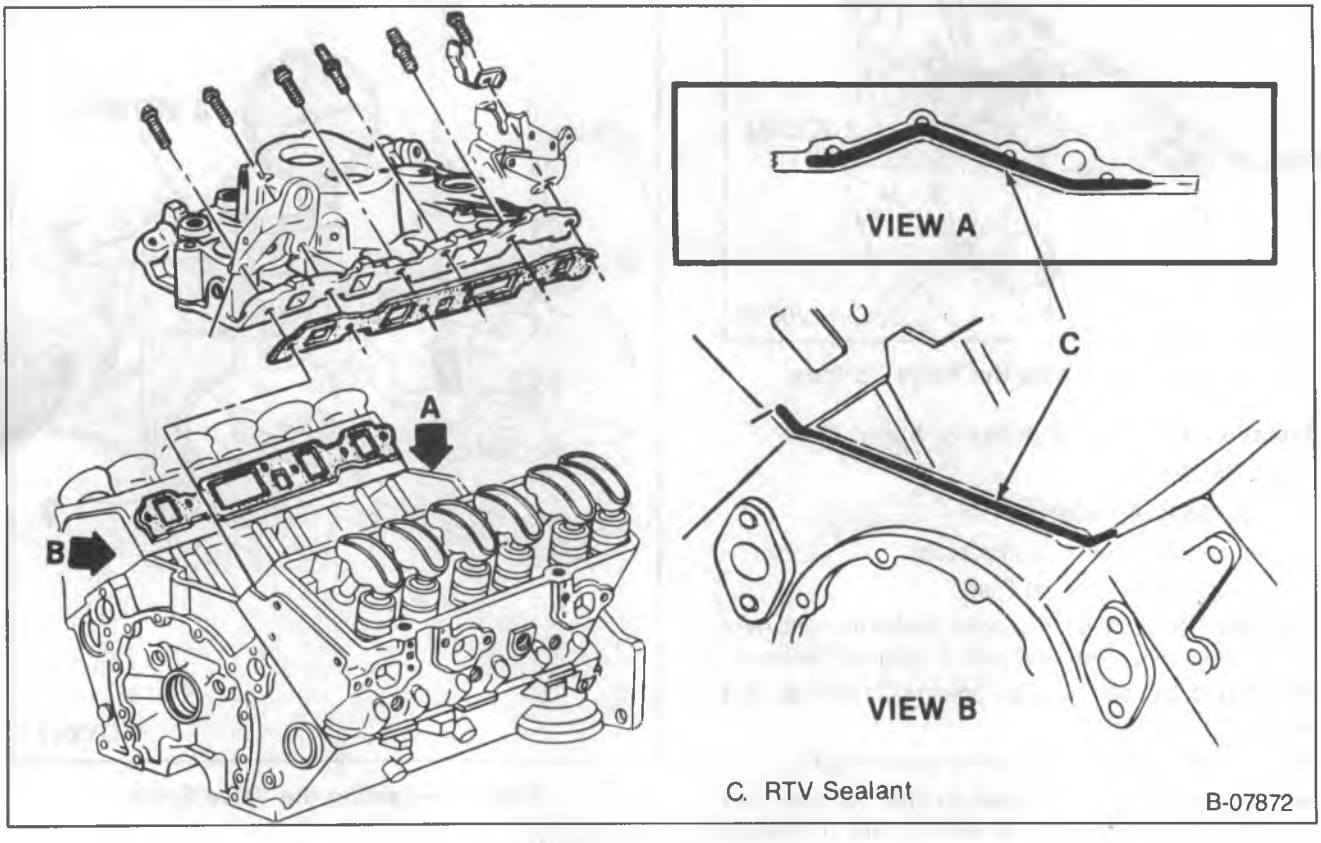

Figure 8—Intake Manifold

5. Transmission dipstick tube (if equipped).
6. Wiring harness.
7. Sensors with bracket.
8. EGR vacuum line.
9. Coil wires.
10. Upper radiator hose.
11. Fuel and vacuum lines and electrical connections at the TBI and manifold.
12. Generator bracket.
13. Air conditioning compressor (if equipped).
14. Cruise control transducer (if equipped).
15. Accelerator, cruise control and TVS cables and bracket as equipped.
16. Distributor. Refer to ENGINE ELECTRICAL (SEC. 6D).
17. Air cleaner and heat stove tube.
18. Engine cover.
19. Negative battery cable.

- Fill the cooling system with the proper coolant. Refer to MAINTENANCE AND LUBRICATION (SEC. 0B).

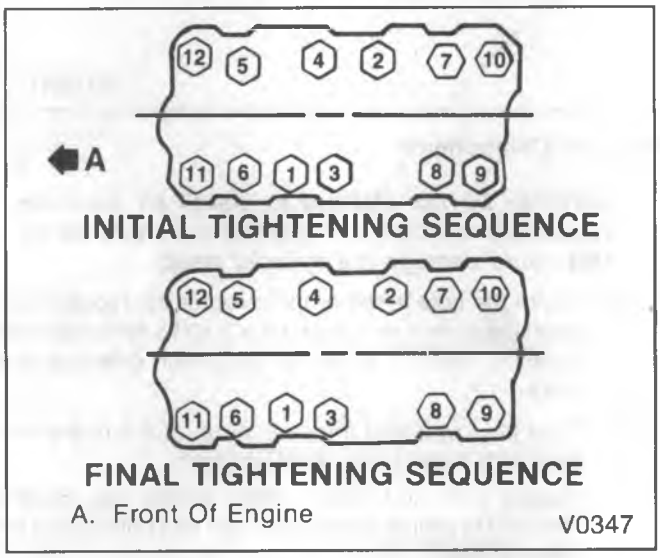

Figure 9 – Intake Manifold Bolt Tightening Sequence

HYDRAULIC LIFTER REPLACEMENT

Remove or Disconnect (Figure 10)

1. Rocker arm cover, intake manifold, and pushrods. Refer to "Rocker Arm Replacement," "Intake Manifold Replacement" and "Rocker Arm and Pushrod Replacement" in this section.
2. Bolts (40).
3. Retainer (41) with restrictors (46).
4. Hydraulic lifters.
   - Remove the hydraulic lifters one at a time and place them in an organizer rack. The lifters must be installed in the same bore from which they were removed.

Inspect

- Hydraulic lifter body for scuffing or scoring. If the lifter body wall is worn or damaged, the mating bore in the block should also be checked.
- Check the fit of each hydraulic lifter in its mating bore in the block. If the clearance is excessive, try a new lifter.
- Roller for freedom of movement.
- Roller for flat spots, pits and missing or broken needle bearings. If worn, pitted, or damaged, the mating camshaft lobe should also be checked.

Hydraulic Lifter Repair

- Refer to the 1991 Light Duty Truck Unit Repair Manual.

Install or Connect (Figure 10)

1. Hydraulic lifters to the block. Lubricate the lifter roller and body with High Viscosity Oil with Zinc (GM part number 12345501 or equivalent).

   Important
   - When any new hydraulic lifters or a new camshaft is installed, change the engine oil and filter. GM Engine Oil Supplement GM part number 1052367 (or equivalent) should be added to the engine oil.
   - Replace all hydraulic lifters when a new camshaft is installed.
2. Retainer (41) with restrictors (46).

NOTICE: See "Notice" on page 6A3-1 of this section.

3. Bolts (40).

   Tighten
   - Bolts (40) to 16 N•m (145 in. lbs.).
4. Intake manifold. Refer to "Intake Manifold Replacement" in this section.
5. Pushrod. Refer to "Rocker Arm and Pushrod Replacement" in this section.

   Adjust
   - Valves. Refer to "Valve Adjustment" in this section.
6. Rocker arm cover. Refer to "Rocker Arm Cover Replacement" in this section.

ROCKER ARM STUD REPLACEMENT

Remove or Disconnect (Figure 11)

Tool Required:

J 5802-01 Rocker Arm Stud Remover

1. Rocker arm cover and rocker arm. Refer to "Rocker Arm Cover Replacement" and "Rocker Arm and Pushrod Replacement" in this section.
2. Rocker arm stud.
   - Place J 5802-01 over the rocker arm stud.
   - Install a nut and flat washer.
   - Turn the nut to remove the stud (figure 11).

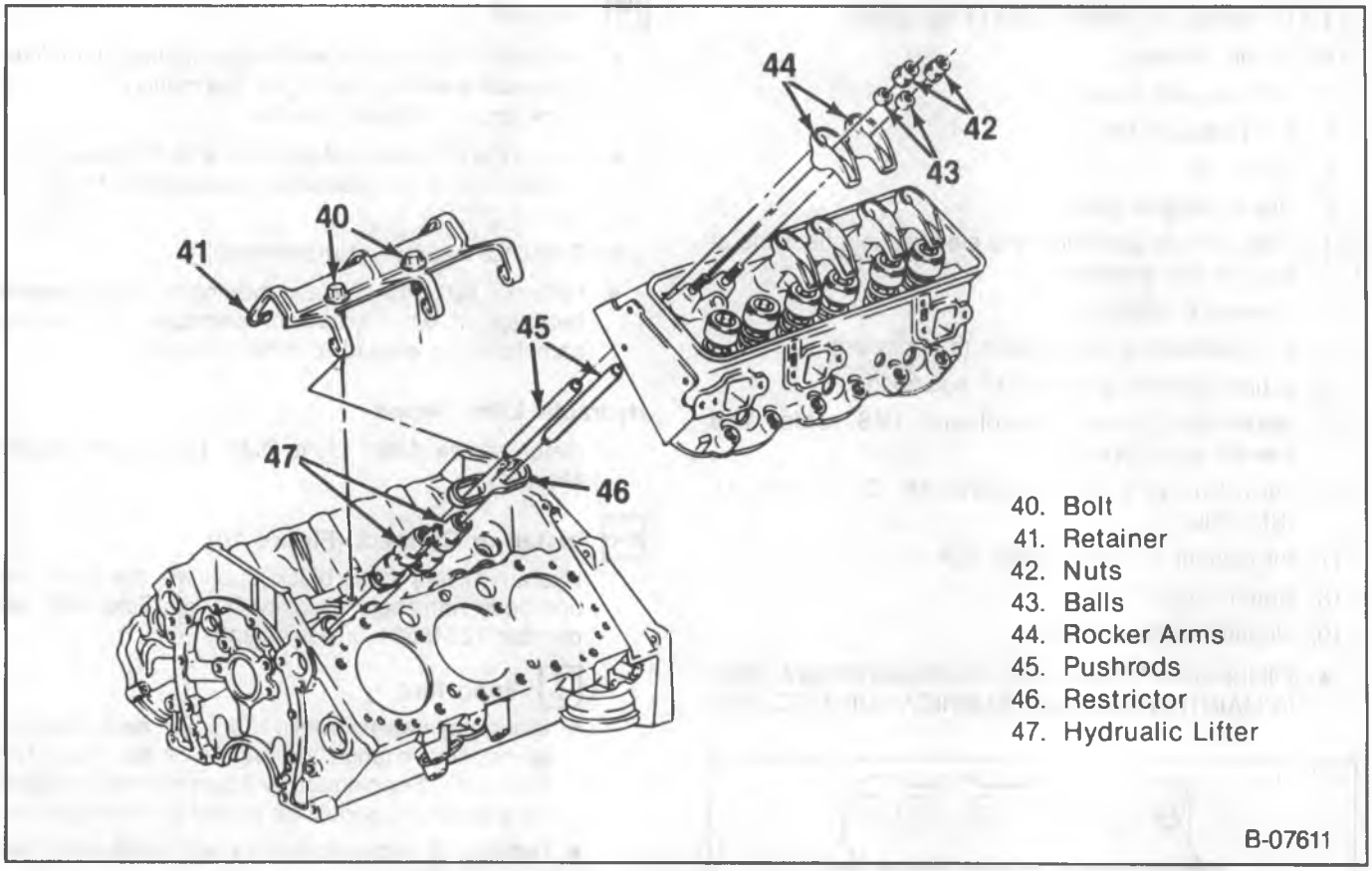

Figure 10—Hydraulic Lifters and Components

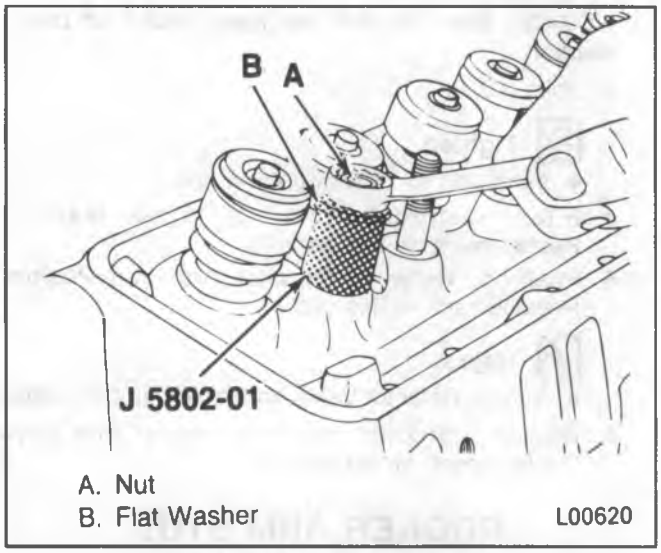

Figure 11—Removing the Rocker Arm Stud

Install or Connect (Figures 12 and 13)

Tools Required:

J 5715 Reamer (0.003-inch oversize) or
J 6036 Reamer (0.013-inch oversize)
J 6880 Rocker Arm Stud Installer

NOTICE: Do not attempt to install an oversize rocker arm stud without reaming the stud hole as this could damage the cylinder head.

- Ream the hole to the proper size for the replacement oversize rocker arm stud. Use J 5715 for 0.003-inch oversize studs; J 6036 for 0.013-inch oversize stud (figure 12).
- Coat the lower end (press-fit area) of the rocker arm stud with hypoid rear axle lubricant.

1. Rocker arm stud. Use J 6880 (figure 13). Stud is installed to proper depth when the tool bottoms on the cylinder head.
2. Rocker arm. Refer to "Rocker Arm and Pushrod Replacement" in this section.

Adjust

- Valves. Refer to "Valve Adjustment" in this section.

3. Rocker arm cover. Refer to "Rocker Arm Cover Replacement" in this section.

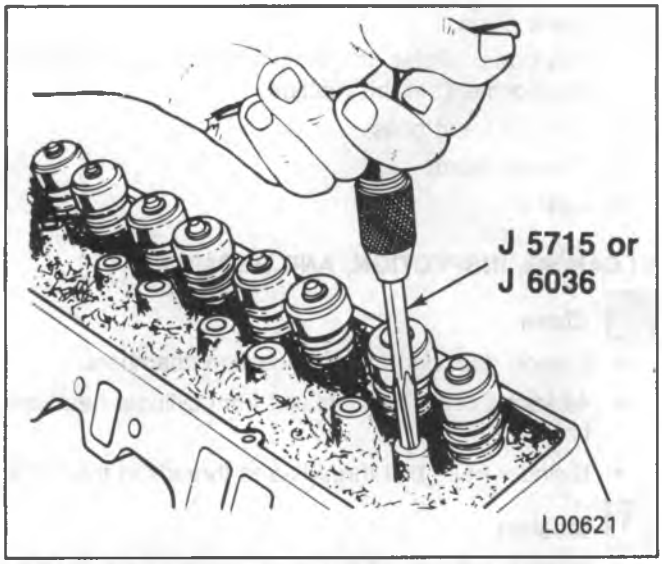

Figure 12 – Reaming the Rocker Arm Stud Bore

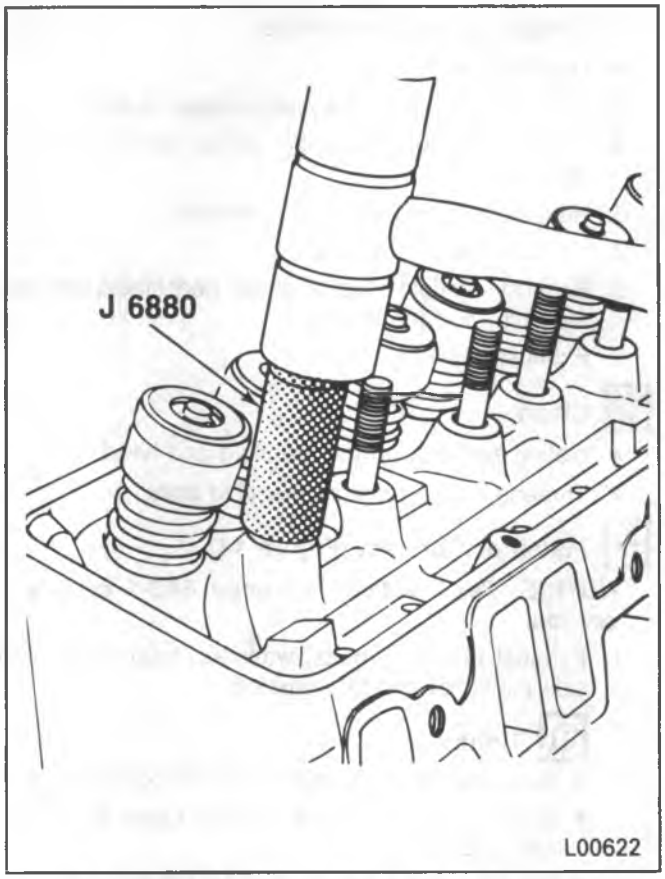

Figure 13 – Installing the Rocker Arm Stud

EXHAUST MANIFOLD REPLACEMENT

Remove or Disconnect (Figure 14)

1. Negative battery cable.
2. Engine cover.

- Raise the vehicle. Support with suitable safety stands (if necessary).

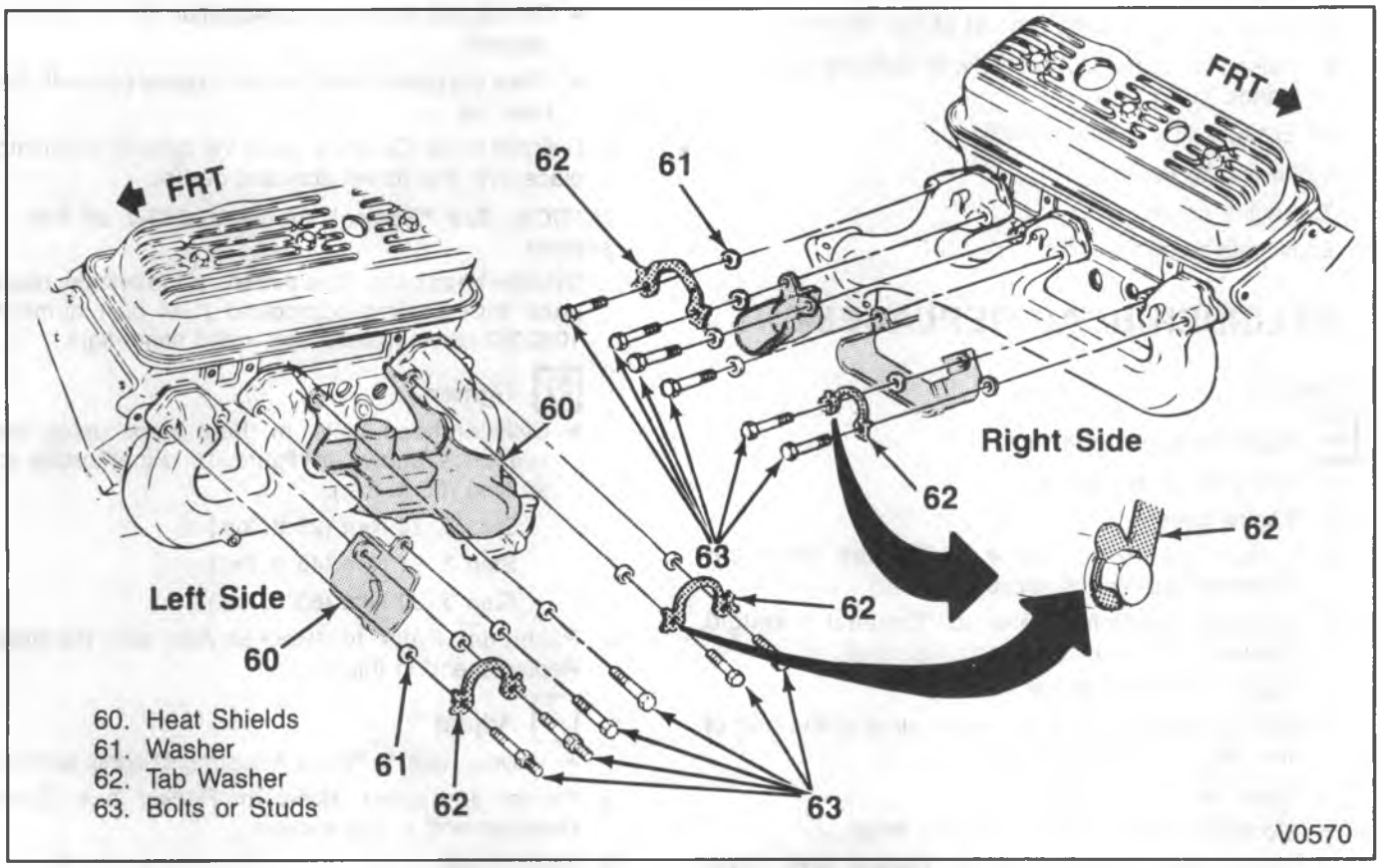

Figure 14 – Exhaust Manifold

3. Exhaust pipe at the manifold.
- Lower the vehicle.
4. Left side floor section by accelerator pedal.
5. Left side power steering pump bracket at the manifold.
6. Heat stove pipe (right side manifold).
7. Cylinder head right side.
8. Exhaust manifold bolts, washers, heat shield (left side manifold) and tab washers.
9. Exhaust manifold.

Clean

- Mating surfaces on the manifold and head.
- Threads on the exhaust manifold bolts.

Install or Connect (Figure 14)

NOTICE: See "Notice" on page 6A3-1 of this section.

1. Exhaust manifold, bolts, washers, heat shield (left side manifold) and tab washers.

Tighten

- Bolts on center exhaust tube to 36 N•m (26 ft. lbs.).
- Bolts on front and rear exhaust tubes to 28 N•m (20 ft. lbs.).
- Bend the tab washers over the heads of all bolts.

2. Floor section.
3. Dipstick tube bracket at the manifold.
4. Heat stove tube (right side manifold).
5. Power steering pump bracket at the manifold.
- Raise the vehicle. Support with suitable safety stands.
6. Exhaust pipe to the manifold.
- Lower the vehicle.
7. Engine cover.
8. Negative battery cable.

CYLINDER HEAD REPLACEMENT

REMOVAL

Remove or Disconnect

1. Negative battery cable.
2. Engine cover.
3. Intake manifold. Refer to "Intake Manifold Replacement" in this section.
4. Exhaust manifold. Refer to "Exhaust Manifold Replacement" in this section.
5. Spark plug wires at the brackets.
6. Wiring harness, clip and ground strap at the rear of the head (right cylinder head).
7. Generator (right side).
8. Coolant sensor wire (left cylinder head).
9. Rocker arm cover. Refer to "Rocker Arm Cover Replacement" in this section.
10. Spark plugs.
11. Pushrods. Refer to "Rocker Arm and Pushrod Replacement" in this section.
12. Cylinder head bolts.
13. Cylinder head.
14. Gasket.

CLEANING, INSPECTION, AND REPAIR

Clean

- Carbon deposits from combustion chambers.
- All traces of old head gasket from cylinder head and block.
- Cylinder head bolt threads and threads in the block.

Inspect

- Sealing surfaces of the block and cylinder head for nicks, heavy scratches or other damage.

Cylinder Head Repair

- Refer to the 1991 Light Duty Truck Unit Repair Manual.

INSTALLATION

Install or Connect (Figure 15)

1. Head gasket.
   - If a steel gasket is used, coat both sides of the gasket with sealer. Spread the sealer thin and evenly.
   - Do not use sealer on composition steel-asbestos gaskets.
   - Place the gasket over the block dowel pins with the bead up.
2. Cylinder head. Carefully guide the cylinder head into place over the dowel pins and gasket.

NOTICE: See "Notice" on page 6A3-1 of this section.

3. Cylinder head bolts. Coat threads of the cylinder head bolts with sealing compound (GM part number 1052080 or equivalent) and install finger-tight.

Tighten

- Cylinder head bolts, in three steps using the sequence shown in figure 15. Final-torque to 90 N•m (65 ft. lbs.).

  Step 1. 34 N•m (25 ft. lbs.)

  Step 2. 61 N•m (45 ft. lbs.)

  Step 3. 90 N•m (65 ft. lbs.)

4. Pushrods. Refer to "Rocker Arm and Pushrod Replacement" in this section.

Adjust

- Valves. Refer to "Valve Adjustment" in this section.

5. Rocker arm cover. Refer to "Rocker Arm Cover Replacement" in this section.
6. Spark plugs.
7. Coolant sensor wire (left cylinder head).

8. Wiring harness, clip and ground strap (right cylinder head).
9. Spark plug wires.
10. Intake manifold. Refer to "Exhaust Manifold Replacement" in this section.
11. Generator. Refer to CHARGING SYSTEM (SEC. 6D3).
12. Exhaust manifold. Refer to "Exhaust Manifold Replacement" in this section.
13. Engine cover.
14. Negative battery cable.

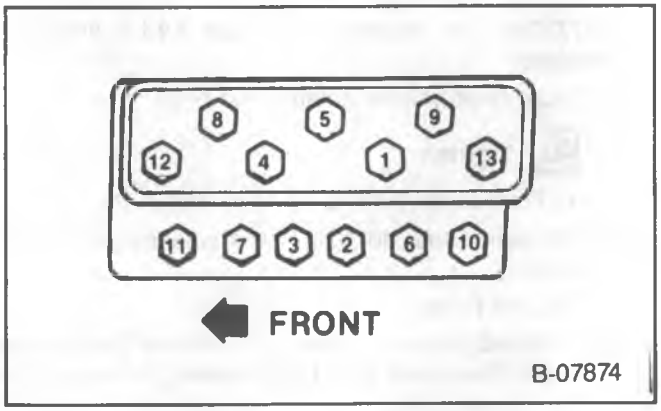

Figure 15—Cylinder Head Bolt Tightening Sequence

TORSIONAL DAMPER AND FRONT CRANKSHAFT SEAL REPLACEMENT

Remove or Disconnect (Figure 16)

Tool Required:

J 23523-E Torsional Damper Puller and Installer

1. Fan belts, fan and pulley.
2. Fan shroud assembly.
3. Accessory drive pulley.
4. Torsional damper bolt.

NOTICE: The inertia weight section of the torsional damper is assembled to the hub with a rubber type material. The correct removal procedures (with the proper tool) must be followed or movement of the inertia weight section of the hub will destroy the tuning of the torsional damper.

5. Torsional damper using J 23523-E (figure 16).
6. Front crankshaft seal. Pry out with a large screwdriver.
   - Take care not to distort the timing cover.
7. Crankshaft key (if necessary).

Inspect

- Oil seal contact area on the torsional damper shaft for grooving and roughness. Replace if necessary.

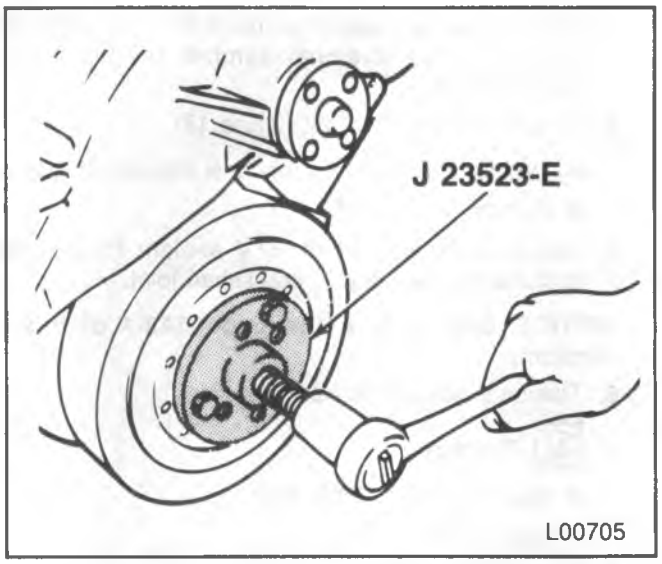

Figure 16—Removing the Torsional Damper

Install or Connect (Figures 17 and 18)

Tools Required:

J 35468 Seal Installer

J 23523-E Torsional Damper Puller and Installer

1. Crankshaft key (if removed).
2. Front crankshaft seal using J 35468 (figure 17). The open end of the seal faces inside the engine. Coat the seal lips with engine oil.

NOTICE: The inertia weight section of the torsional damper is assembled to the hub with a rubber-like material. The correct installation procedures (with the proper tool) must be followed or movement of the inertia weight section of the hub will destroy the tuning of the torsional damper.

3. Stud ('A'; figure 18) to the crankshaft. Thread the stud fully into the tapped hole in the crankshaft.

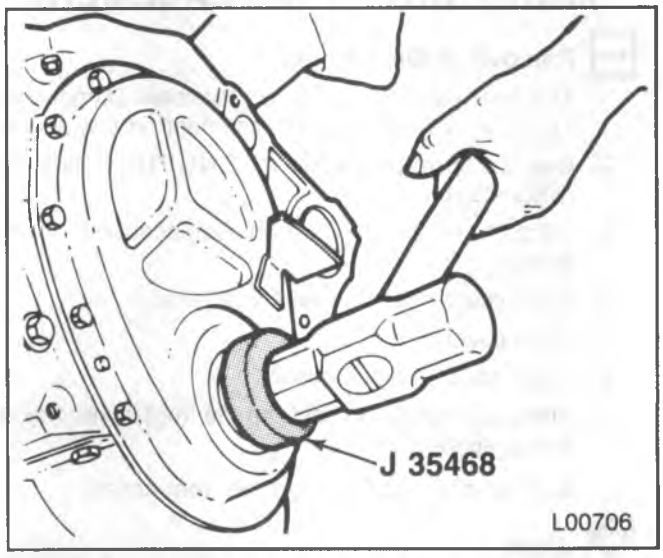

Figure 17—Installing the Front Crankshaft Oil Seal

4. Torsional damper over the end of the stud. Align the keyway in the torsional damper shaft with the crankshaft key.
5. Bearing, washer and nut (figure 18).
   - Turn the nut to pull the torsional damper into place.
   - Remove J 25323-E.
- Use a small amount of RTV sealant to seal the torsional damper key to crankshaft joint.

NOTICE: See "Notice" on page 6A3-1 of this section.

6. Torsional damper bolt and washer.

Tighten

- Bolt to 95 N•m (70 ft. lbs.).

7. Accessory drive pulley.
8. Fan shroud assembly.
9. Fan pulley, fan and fan belts.

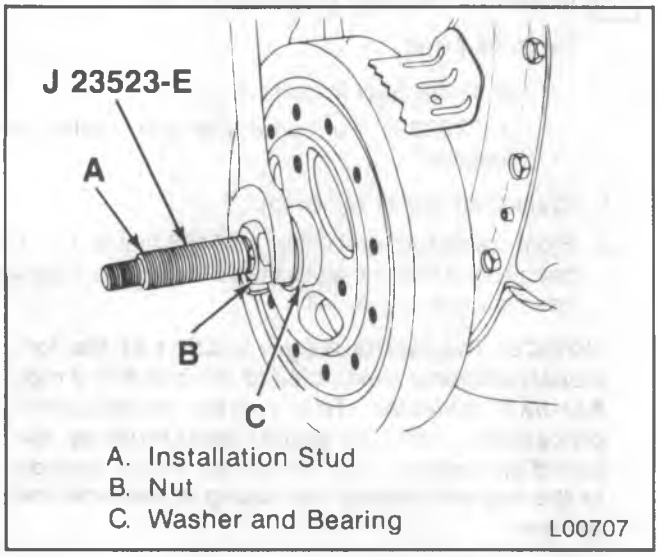

Figure 18—Installing the Torsional Damper

FRONT COVER REPLACEMENT

Remove or Disconnect

1. Torsional damper. Refer to "Torsional Damper and Front Crankshaft Seal Replacement" in this section.
2. Coolant pump. Refer to ENGINE COOLING (SEC. 6B1).
3. Oil pan. Refer to "Oil Pan Replacement" in this section.
4. Front cover bolts and reinforcements.
5. Front cover.
6. Front cover to block gasket.
7. Front crankshaft oil seal from the front cover. Pry out with a screwdriver.
   - Take care not to distort the front cover.

Clean

- Old gasket from the front cover and block.

Inspect

- Front cover for distortion and damage. Replace if necessary.

Install or Connect (Figure 19)

Tool Required:

J 35468 Seal Installer

1. Front crankshaft oil seal using J 35468 (figure 19). The open end of the seal faces inside the engine. Coat the seal lips with engine oil.
2. Front cover gasket to the front cover. Use gasket cement to hold them in place.

NOTICE: See "Notice" on page 6A3-1 of this section.

3. Front cover reinforcements and bolts.

Tighten

- Front cover bolts to 14 N•m (120 in. lbs.).

4. Oil pan. Refer to "Oil Pan Replacement" in this section.
5. Coolant pump.
6. Torsional damper. Refer to "Torsional Damper and Front Crankshaft Seal Replacement" in this section.

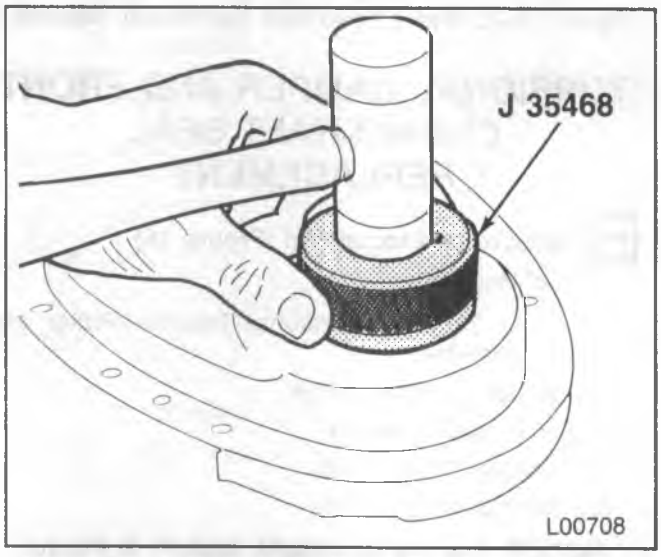

Figure 19—Installing the Front Crankshaft Oil Seal

OIL PAN REPLACEMENT

A one-piece oil pan gasket is used.

Remove or Disconnect (Figure 20)

1. Negative battery cable.
   - Raise the vehicle. Support with suitable safety stands.
   - Drain the engine oil.
2. Exhaust crossover pipe.
3. Torque converter cover (automatic transmission models).
4. Strut rods at flywheel cover, if equipped.

5. Strut rod brackets at the front engine mountings.
6. Starter.
7. Oil cooler lines.
8. Oil pan bolts, nuts and reinforcements.
9. Oil pan and gasket.

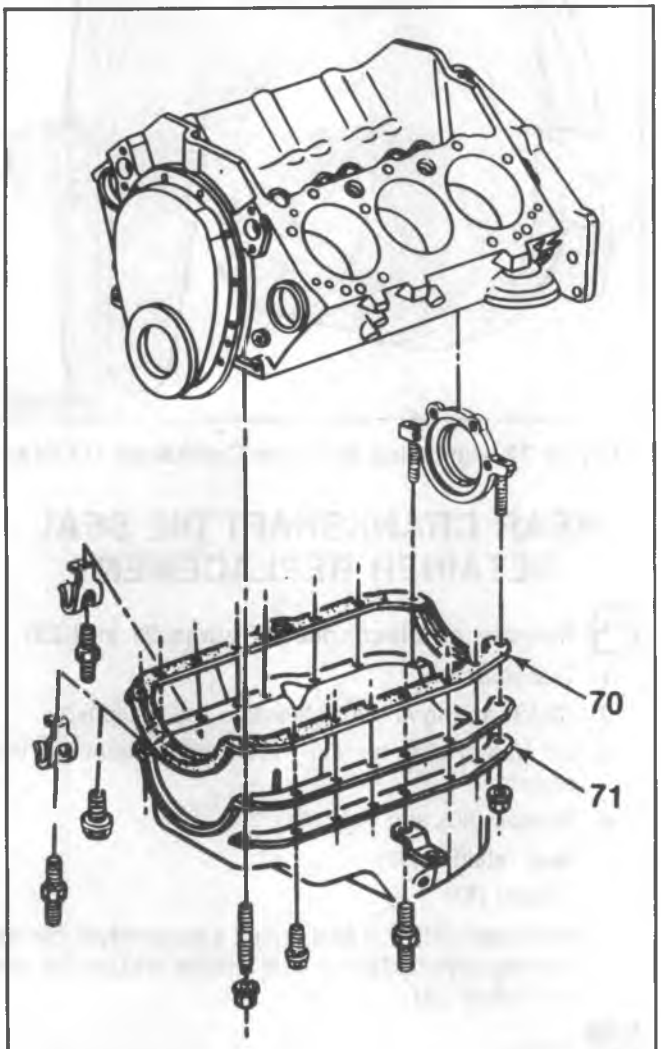

70. Gasket
71. Reinforcement

B-07884

Figure 20—Oil Pan

Clean

- Gasket surfaces on the engine and oil pan.

Inspect

- Oil pan gasket for damage. Replace if necessary.

Install or Connect (Figure 20)

- Apply sealant (GM part number 1052080 or equivalent) to the front cover to block joint and to the rear crankshaft seal to block joint. Apply the sealant for about 25 mm (1-inch) in both directions from each of the four corners.

1. Oil pan gasket to the oil pan.
2. Oil pan to the engine.

NOTICE: See "Notice" on page 6A3-1 of this section.

3. Oil pan bolts, nuts and reinforcements.

Tighten

- Oil pan bolts to 11 N•m (100 in. lbs.).
- Oil pan nuts at corners to 23 N•m (200 in. lbs.).

4. Starter.
5. Oil cooler lines.
6. Strut rod brackets at the front engine mountings (if equipped).
7. Strut rods at the flywheel cover (if equipped).
8. Converter housing under pan (automatic transmission models).
9. Exhaust crossover pipe.

- Lower the vehicle.

10. Proper quantity and grade of engine oil. Refer to MAINTENANCE AND LUBRICATION (SEC. 0B) and Owner's Manual.
11. Negative battery cable.

OIL PUMP REPLACEMENT

Remove or Disconnect

1. Oil pan. Refer to "Oil Pan Replacement" in this section.
2. Oil pump to main bearing cap bolt.
3. Oil pump.

Inspect

- Oil pump pickup tube for looseness. If the tube is loose in the oil pump body, replace it as outlined in the 1991 Light Duty Truck Unit Repair Manual. A loose pickup tube can result in an air leak and loss of oil pressure.

Oil Pump Repair

- Refer to the 1991 Light Duty Truck Unit Repair Manual.

Install or Connect

1. Oil pump to the engine. Align the slot in the oil pump shaft with the tang on the distributor shaft. The oil pump should slide easily into place. No gasket is used.

NOTICE: See "Notice" on page 6A3-1 of this section.

2. Oil pump to main bearing cap bolt.

Tighten

- Oil pump to main bearing cap bolt to 90 N•m (65 ft. lbs.).

3. Oil pan. Refer to "Oil Pan Replacement" in this section.

REAR CRANKSHAFT OIL SEAL REPLACEMENT

Remove or Disconnect (Figure 21)

1. Transmission. Refer to TRANSMISSION AND CLUTCH (SEC. 7).
2. Clutch and flywheel or flexplate (as equipped). Refer to TRANSMISSION AND CLUTCH (SEC. 7).

NOTICE: Care should be taken when removing the rear crankshaft oil seal so as not to nick the crankshaft sealing surface.

3. Rear crankshaft oil seal. Insert a screwdriver into the notches provided in the seal retainer and pry the seal out (figure 21). Take care not to damage the crankshaft sealing surface.

Inspect

- Chamfer on crankshaft for grit, loose rust and burrs. Correct as necessary.

Clean

- Seal running surface on the crankshaft with a non-abrasive cleaner.

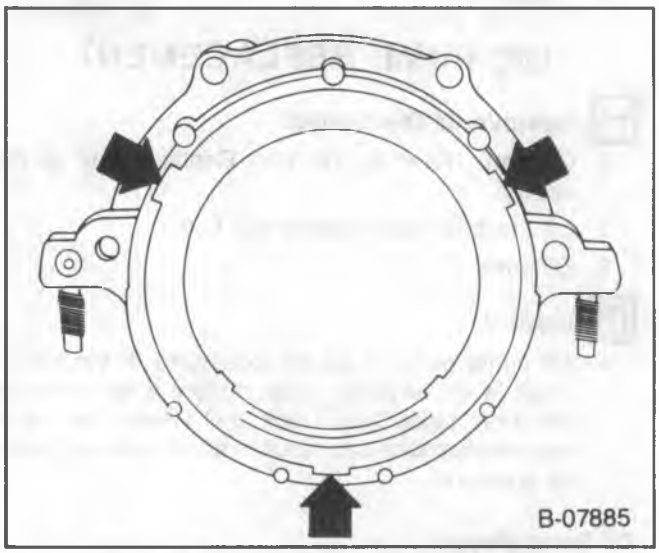

Figure 21—Seal Removal Notches

Install or Connect (Figure 22)

Tool Required:

J 35621 Seal Installer

1. Rear crankshaft oil seal (figure 22).
   - Lubricate the inner and outer diameter of the seal with engine oil.
   - Install the seal on J 35621.
   - Position J 35621 against the crankshaft. Thread the attaching screws into the tapped holes in the crankshaft.
   - Tighten the screws securely with a screwdriver. This will ensure that the seal is installed squarely over the crankshaft.
   - Turn the handle until it bottoms.
   - Remove J 35621.
2. Clutch and flywheel or flexplate (as equipped).
3. Transmission.

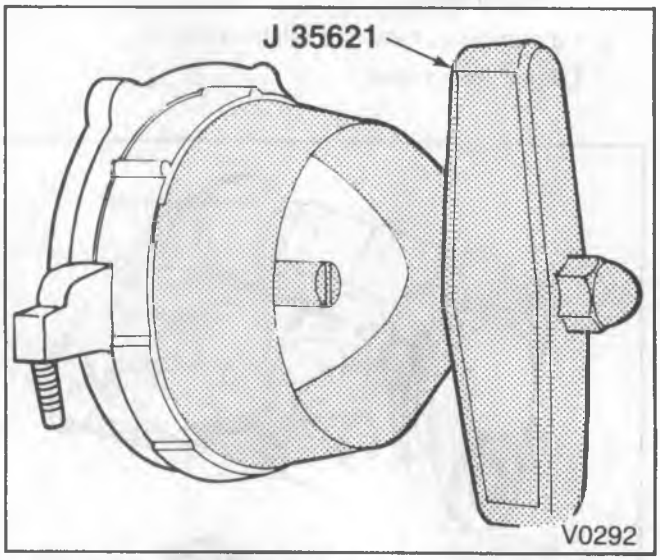

Figure 22—Installing the Rear Crankshaft Oil Seal

REAR CRANKSHAFT OIL SEAL RETAINER REPLACEMENT

Remove or Disconnect (Figures 21 and 23)

1. Transmission.
2. Clutch and flywheel to flexplate (as equipped).
3. Oil pan. Refer to "Oil Pan Replacement" in this section.
4. Screws (80) and nuts (81).
5. Seal retainer (82).
6. Gasket (84).
7. Rear crankshaft oil seal. Insert a screwdriver into the notches provided in the seal retainer and pry the seal out (figure 21).

Clean

- Gasket surfaces on block and seal retainer.

Install or Connect (Figures 21 and 23)

- Whenever the seal retainer is removed, a new retainer gasket and rear crankshaft oil seal must be installed.

1. Gasket (84) to the block. It is not necessary to use sealant to hold the gasket in place.
2. Seal retainer (82).

NOTICE: See "Notice" on page 6A3-1 of this section.

3. Screws (80) and nuts (81).

Tighten

- Screws (80) and nuts (81) to 15 N•m (135 in. lbs.).

4. Oil pan. Refer to "Oil Pan Replacement" in this section.

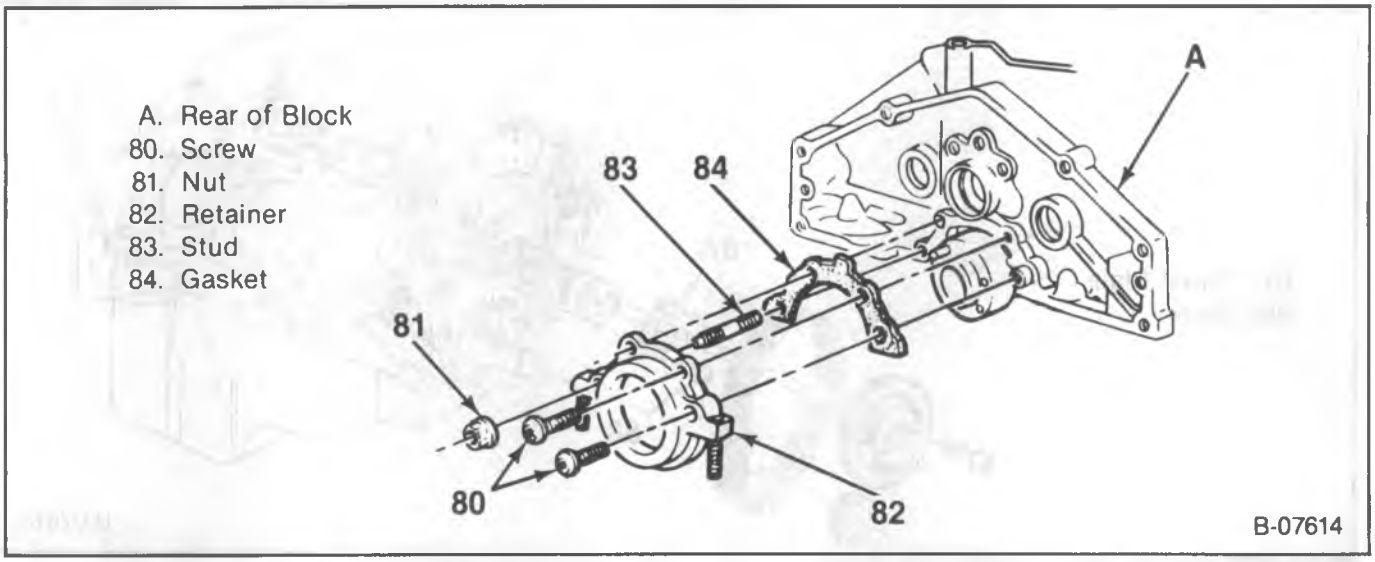

Figure 23—Rear Crankshaft Oil Seal Retainer

5. Rear crankshaft oil seal. Refer to "Rear Crankshaft Oil Seal Replacement" in this section.
6. Clutch and flywheel or flexplate (as equipped).
7. Transmission.

MEASURING CAMSHAFT LOBE LIFT

Tool Required:

J 8520 Camshaft Lobe Lift Indicator

1. Remove the rocker arm. Refer to "Rocker Arm and Pushrod Replacement" in this section.
2. Refer to figure 24. Position the dial indicator (part of J 8520) so the plunger rests on the pushrod end as shown. Make sure the pushrod is in the lifter socket.
3. Rotate the crankshaft slowly in the direction of rotation until the lifter is on the heel of the cam lobe. At this point the pushrod will be in its lowest position.
4. Set dial indicator on zero, then rotate the crankshaft slowly or attach an auxiliary starter switch and "bump" the engine over until the pushrod is in the fully-raised position.

Important

- Whenever the engine is cranked remotely at the starter with a special jumper cable or other means, the distributor primary lead should be disconnected from the ignition coil.

5. Compare the total lift recorded from the dial indicator with "Specifications" at the end of this section.
6. If camshaft readings for all lobes are within specifications, remove J 8520.
7. Install the rocker arm and adjust the valves. Refer to "Rocker Arm and Pushrod Replacement" and "Valve Adjustment" in this section

CAMSHAFT REPLACEMENT

Remove or Disconnect (Figures 25 through 28)

Tool Required:

J 5825-A Crankshaft Sprocket Puller

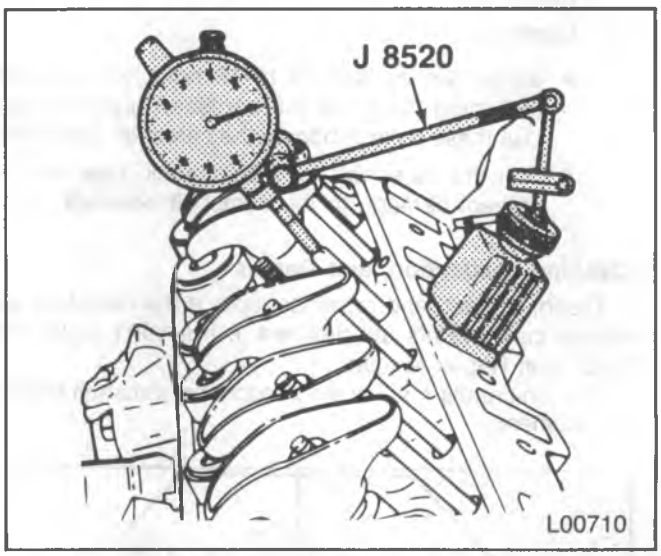

Figure 24—Measuring Camshaft Lobe Lift

1. Negative battery cable.
2. Intake manifold. Refer to "Intake Manifold Replacement" in this section.
3. Rocker arm covers. Refer to "Rocker Arm Cover Replacement" in this section.
4. Hydraulic lifters and pushrods. Refer to "Hydraulic Lifter Replacement" and "Rocker Arm and Pushrod Replacement" in this section.
5. Radiator. Refer to RADIATOR (SEC. 6B2).
6. Coolant pump. Refer to ENGINE COOLING (SEC. 6B1).
7. Front cover. Refer to "Front Cover Replacement" in this section.

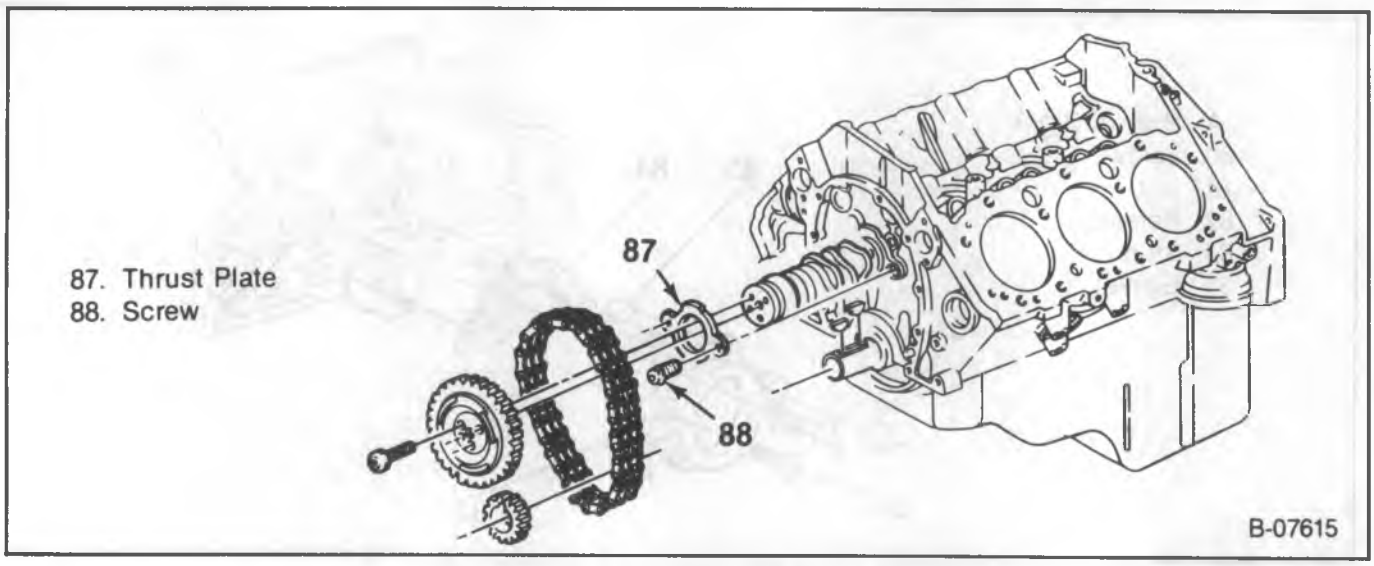

Figure 25—Rear Camshaft and Components

- Align the timing marks (figure 26).

8. Camshaft sprocket and timing chain. The sprocket is a light interference fit on the camshaft. Tap the sprocket on its lower edge to loosen it.
9. Screws (88) and thrust plate (87).
10. Crankshaft sprocket (if necessary) using J 5825-A (figure 27).
11. Camshaft.
    - Install two or three 5/16-18 bolts 100-125 mm (4-5-inch) long into the camshaft tapped holes. Use these bolts to handle the camshaft (figure 28).
    - Pull the camshaft from the block. Use care to prevent damage to the camshaft bearings.

Cleaning, Inspection, and Repair

Clean, inspect, and repair or replace the camshaft and related components, as outlined in the 1991 Light Duty Truck Unit Repair Manual.

The Unit repair manual also describes camshaft bearing replacement.

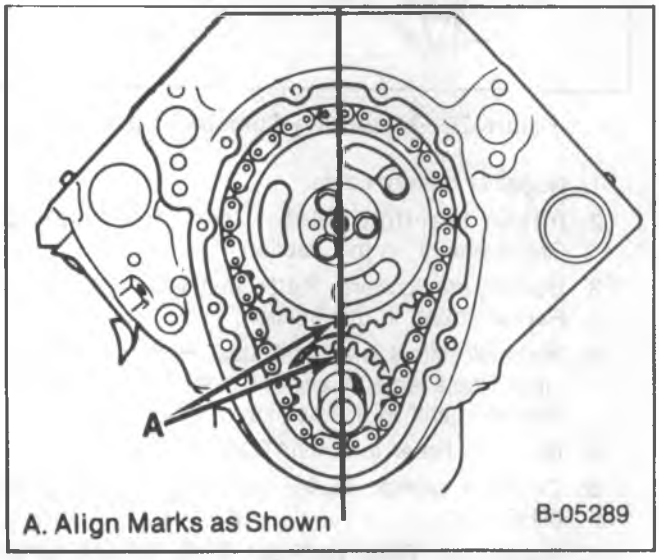

Figure 26—Timing Marks

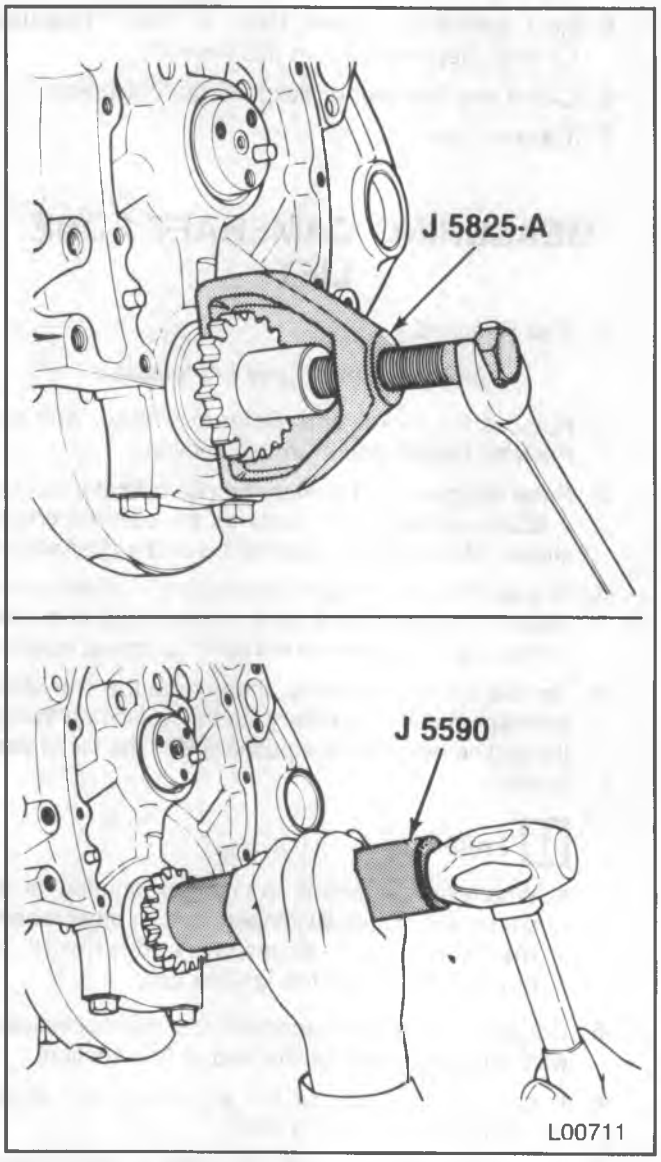

Figure 27—Replacing the Crankshaft Sprocket

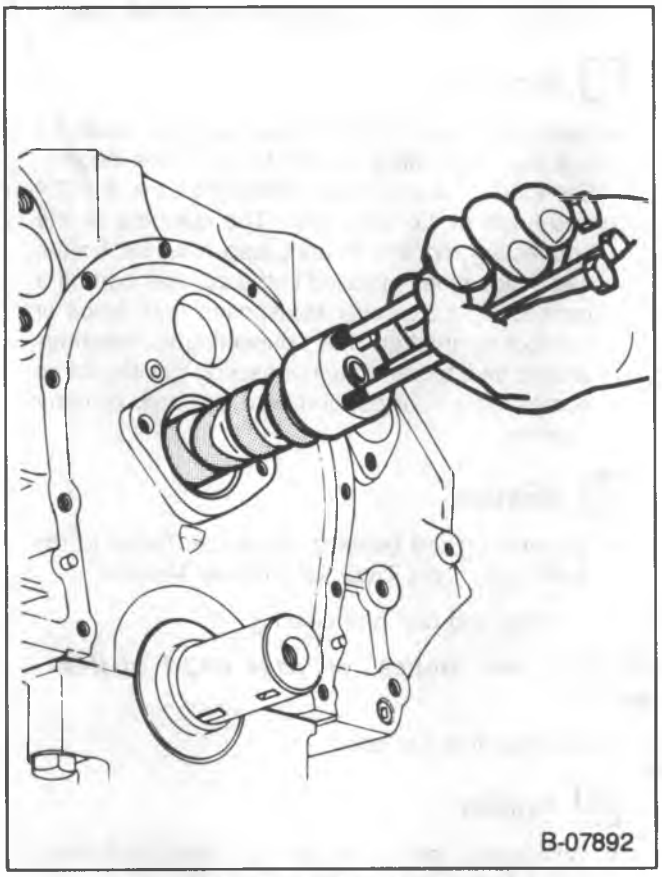

Figure 28 – Replacing the Camshaft

Install or Connect (Figures 25 through 28)

NOTICE: For steps 4 and 6 see "Notice" on page 6A3-1 of this section.

Tool Required:

J 5590 Crankshaft Sprocket Installer

- Coat the camshaft lobes and journals with High Viscosity Oil with Zinc (GM part number 12345501 or equivalent).

1. Two or three 5/16-18 bolts 100-125 mm (4-5-inch) long into the camshaft threaded holes. Use these bolts to handle the camshaft.
2. Camshaft to the engine (figure 28). Handle the camshaft carefully to prevent damage to the camshaft bearings.
3. Crankshaft sprocket using J 5590 (figure 27). Make sure the timing mark faces outside.
4. Thrust plate (87) and screws (88).

   Tighten

   - Screws (88) to 12 N•m (105 in. lbs.).
5. Camshaft sprocket and timing chain.

   Important

   - Line up the timing marks on the camshaft sprocket and crankshaft sprocket (figure 26).
6. Camshaft sprocket bolts.

   Tighten

   - Bolts to 28 N•m (21 ft. lbs.).
7. Front cover. Refer to "Front Cover Replacement" in this section.
8. Coolant pump. Refer to ENGINE COOLING (SEC. 6B1).
9. Hydraulic lifters and pushrods. Refer to "Hydraulic Lifter Replacement" and "Rocker Arm and Pushrod Replacement" in this section.

   Adjust

   - Valves. Refer to "Valve Adjustment" in this section.
10. Rocker arm covers. Refer to "Rocker Arm Cover Replacement" in this section.
11. Intake manifold. Refer to "Intake Manifold Replacement" in this section.
12. Radiator. Refer to RADIATOR (SEC. 6B2).
13. Negative battery cable.

CONNECTING ROD AND PISTON REPLACEMENT

Remove or Disconnect (Figure 29)

Tool Required:

J 5239 Guide Set

1. Cylinder head. Refer to "Cylinder Head Replacement" in this section.
2. Oil pan. Refer to "Oil Pan Replacement" in this section.
3. Oil pump (if necessary). Refer to "Oil Pump Replacement" in this section.
4. Ridge or deposits from the upper end of the cylinder bores.
   - Turn the crankshaft until the piston is at BDC.
   - Place a cloth on top of the piston.
   - Perform the cutting operation with a ridge reamer.
   - Turn the crankshaft until the piston is at TDC
   - Remove the cloth and cuttings.
5. Connecting rod cap. Check the connecting rod and cap for identification marks. Mark the parts if required. The connecting rod and cap must be kept together as mating parts.
6. Connecting rod and piston.
   - Attach J 5239 to the connecting rod bolts (figure 29).
   - Use the long guide rod of J 5239 to push the connecting rod and piston out of the bore.
7. Connecting rod bearing.

Cleaning, Inspection, and Repair

Clean, inspect, and repair or replace the components as necessary. Measure connecting rod bearing clearance, piston clearance, ring clearances, etc. Refer to the 1991 Light Duty Truck Unit Repair Manual.

The Unit Repair Manual contains information on:

- Connecting rod and piston.
- Piston rings.
- Connecting rod and crankpin.
- Cylinder bores.

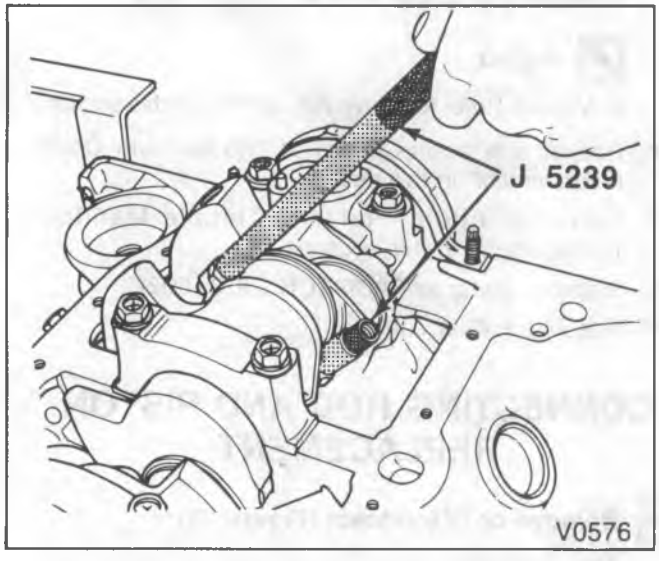

Figure 29—Replacing the Connecting Rod and Piston

Install or Connect (Figures 29 through 32)

Tools Required:

J 5239 Connecting Rod Guide Set

J 8037 Ring Compressor

- Make sure the cylinder walls are clean. Lubricate the cylinder wall lightly with engine oil.
- Make sure the piston is installed in the matching cylinder.

1. Connecting rod bearings.
   - Be certain that the bearing inserts are of the proper size.
   - Install the bearing inserts in the connecting rod and connecting rod cap.
   - Lubricate the bearings with engine oil.
2. Piston and connecting rod to the proper bore.
   - With connecting rod cap removed, install J 5239 onto the connecting rod studs (figure 29).
   - Locate the piston ring end gaps as shown in figure 30. Lubricate the piston and rings with engine oil.
   - Without disturbing the ring end gap location, install J 8037 over the piston (figure 31).
   - The piston must be installed so that the notch in the piston faces the front of the engine (figure 30).
   - Place the piston in its matching bore. The connecting rod bearing tang slots must be on the side opposite the camshaft. Using light blows with a hammer handle, tap the piston down into its bore (figure 31). At the same time, from beneath the vehicle, guide the connecting rod to the crankpin with J 5239 (figure 29). Hold the ring compressor against the block until all rings have entered the cylinder bore.
   - Remove J 5239 from the connecting rod bolts.

Important

- Each connecting rod and bearing cap should be marked, beginning at the front of the engine. Cylinders 1, 3 and 5 are at the left bank and 2,4 and 6 are at the right bank. The numbers on the connecting rod and bearing cap must be on the same side when installed in the cylinder bore. If a connecting rod is ever transposed from block or cylinder to another, new connecting rod bearings should be fitted and the connecting rod should be numbered to correspond with the new cylinder number.

Measure

- Connecting rod bearing clearance. Refer to the 1991 Light Duty Truck Unit Repair Manual.

3. Connecting rod cap and bearing.

NOTICE: See "Notice" on page 6A3-1 of this section.

4. Connecting rod cap nuts.

Tighten

- Connecting rod cap nuts to 27 N•m (20 ft. lbs.). Then, torque nuts an additional 60°.

Measure

- Connecting rod side clearance. Use a feeler gage between the connecting rod and crankshaft (figure 32). The correct clearance is 0.006-0.014-inch.

5. Oil pump (if removed). Refer to "Oil Pump Replacement" in this section.
6. Oil pan and cylinder head. Refer to "Oil Pan Replacement" and "Cylinder Head Replacement" in this section.

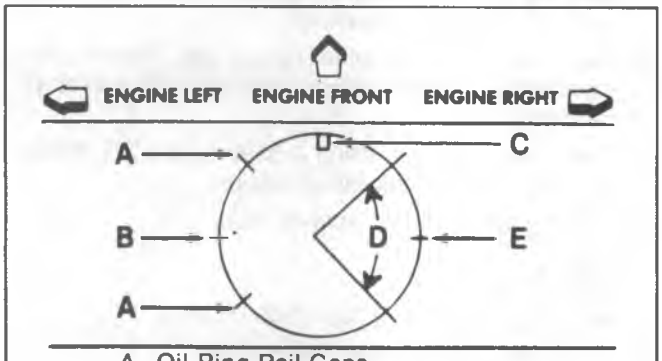

A. Oil Ring Rail Gaps
B. 2nd Compression Ring Gap
C. Notch In Piston
D. Oil Ring Spacer Gap (Tang In Hole Or Slot With Arc)
E. Top Compression Ring Gap

B-07895

Figure 30—Piston Ring End Gap Locations

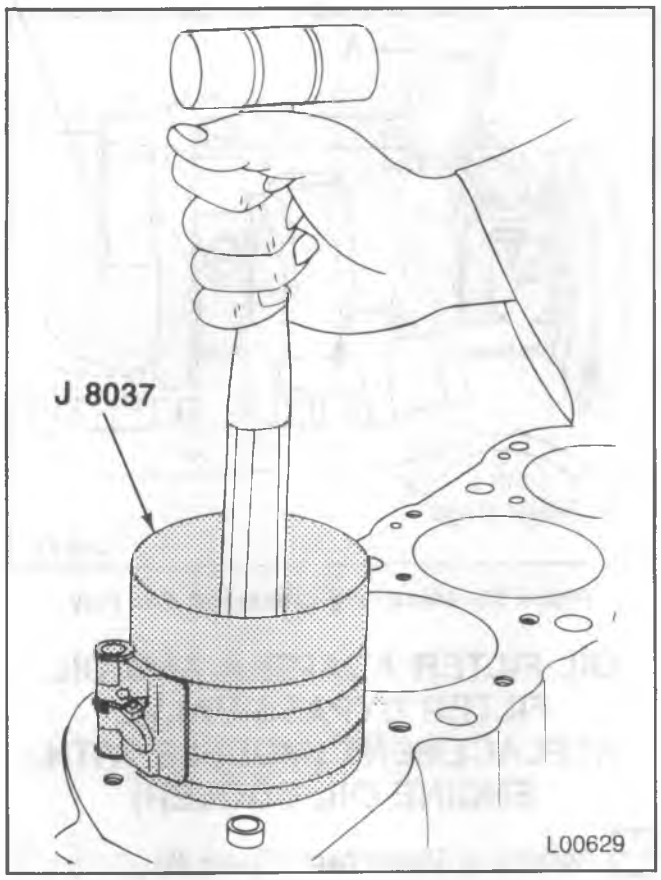

Figure 31—Installing the Piston

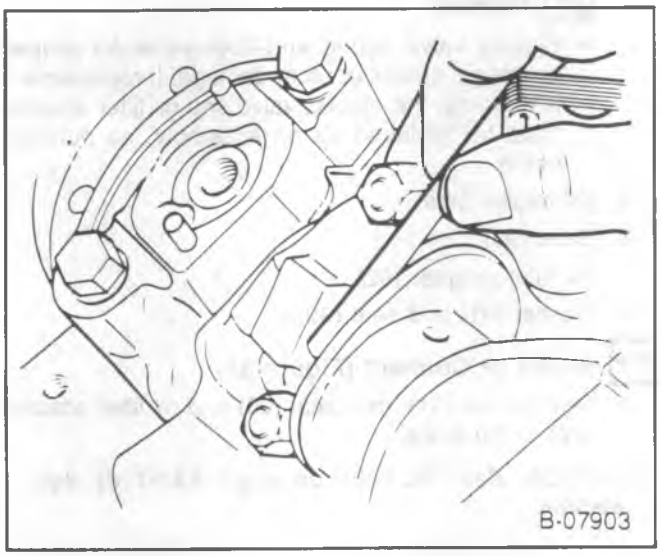

Figure 32—Measuring Connecting Rod Side Clearance

MAIN BEARING REPLACEMENT

Remove or Disconnect (Figure 33)

Tool Required:

J 8080 Main Bearing Remover/Installer

1. Spark plugs.
2. Oil pan. Refer to "Oil Pan Replacement" in this section.
3. Oil pump. Refer to "Oil Pump Replacement" in this section.
4. Main bearing caps.
   - Check the main bearing caps for location markings. Mark the caps if necessary. The caps must be returned to their original locations during assembly.
5. Lower main bearing inserts from the main bearing caps.
6. Upper main bearing inserts.
   - Insert J 8080 into the crankshaft oil hole (figure 33).
   - Rotate the crankshaft to "turn" the bearing insert out of the block.

Cleaning, Inspection, and Repair

Clean, inspect, and repair or replace the components as required. Refer to the 1991 Light Duty Truck Unit Repair Manual. The Unit Repair Manual contains information on:

- Crankshaft.
- Main and connecting rod bearings.

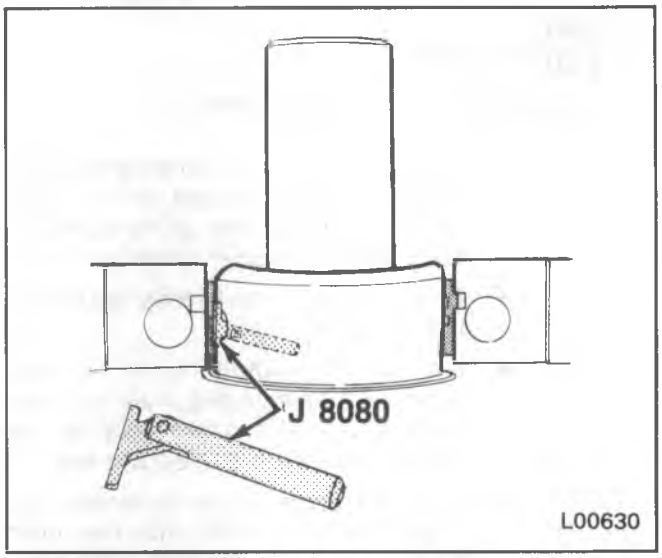

Figure 33—Removing the Main Bearing Insert

Install or Connect (Figures 33 and 34)

Tool required:

J 8080 Main Bearing Remover/Installer

Notice: For steps 3 and 4 see "Notice" on page 6A3-1 of this section.

1. Upper main bearing inserts.
   - Insert J 8080 into a crankshaft main bearing oil hole (figure 33).
   - Apply engine oil to inserts of proper size.
   - Insert the plain end (without the bearing tang) of the insert between the crankshaft and the notched side of the block.
   - Rotate the crankshaft to "roll" the insert into the block.
   - Remove J 8080.

2. Lower main bearing inserts to the main bearing caps.
   - Make sure the inserts are of the proper size.
   - Apply engine oil to the inserts.

Measure

- Main bearing clearance. Refer to the proper Unit Repair Manual. If the engine is in the vehicle, the crankshaft must be supported upward to remove any clearance from the upper bearing. The total clearance can then be measured between the lower bearing and journal.

3. Main bearing caps (except rear cap) and bolts to the block.

Tighten

- Main bearing cap bolts to 110 N•m (80 ft. lbs.).

4. Rear main bearing cap.
   - Apply engine oil to the bearing insert.
   - Install the main bearing cap and bolts. Tighten the bolts temporarily to 14 N•m (10 ft. lbs.).

Measure

- Crankshaft end play, as follows:
  - Tap the end of the crankshaft first rearward then forward with a lead hammer. This will line up the rear main bearing and crankshaft thrust surfaces.
  - Tighten the rear main bearing cap bolts to 110 N•m (80 ft. lbs.).
  - With the crankshaft forced forward, measure at the front end of the rear main bearing with a feeler gage (figure 34). The proper clearance is 0.002-0.006-inch.
  - If correct end play cannot be obtained, be certain that the correct size rear main bearing has been installed. Production engines may have rear main bearings that are 0.008-inch wider across the thrust faces than standard. Refer to the proper Unit Repair Manual for more information.

5. Oil pump. Refer to "Oil Pump Replacement" in this section.
6. Oil pan. Refer to "Oil Pan replacement" in this section.
7. Spark plugs.

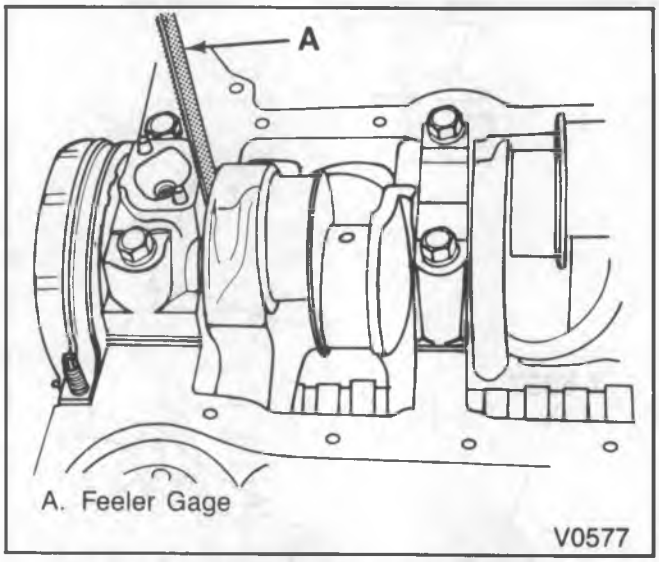

Figure 34—Measuring Crankshaft End Play

OIL FILTER ADAPTER AND OIL FILTER BYPASS VALVE REPLACEMENT (MODELS WITH ENGINE OIL COOLER)

Remove or Disconnect (Figure 35)

1. Oil filter.

Inspect

- Bypass valve spring and fiber valve for proper operation, cracks or other damage. If replacement is required, the bypass valve and oil filter adapter must be replaced as an assembly, as outlined below.

2. Oil cooler lines.
3. Bolts (93).
   Oil filter adapter (92).
5. Gasket (91) and seal (90).

Install or Connect (Figure 35)

1. New gasket (91), new seal (90) and oil filter adapter (92) to the block.

NOTICE: See "Notice" on page 6A3-1 of this section.

2. Bolts (93).

Tighten

- Bolts (93) to 20 N•m (15 ft. lbs.).

3. Oil cooler lines.
4. Oil filter.

- Add engine oil as needed. Refer to MAINTENANCE AND LUBRICATION (SEC. 0B) and Owner's Manual.

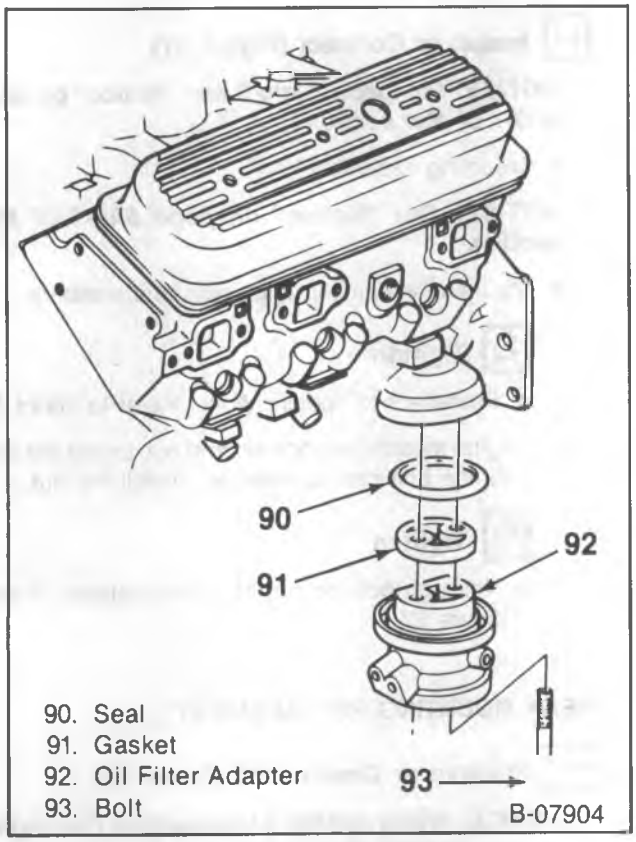

Figure 35—Oil Filter Adapter

CRANKSHAFT REPLACEMENT

1. Remove the engine. Refer to "Engine Replacement" in this section.
2. Refer to the 1991 Light Duty Truck Unit Repair Manual for crankshaft replacement procedures.

FLYWHEEL REPLACEMENT

Remove or Disconnect (Figure 36)

1. Transmission, flywheel housing and clutch (if equipped). Refer to TRANSMISSION AND CLUTCH (SEC. 7).
2. Flywheel bolts.
3. Flywheel.

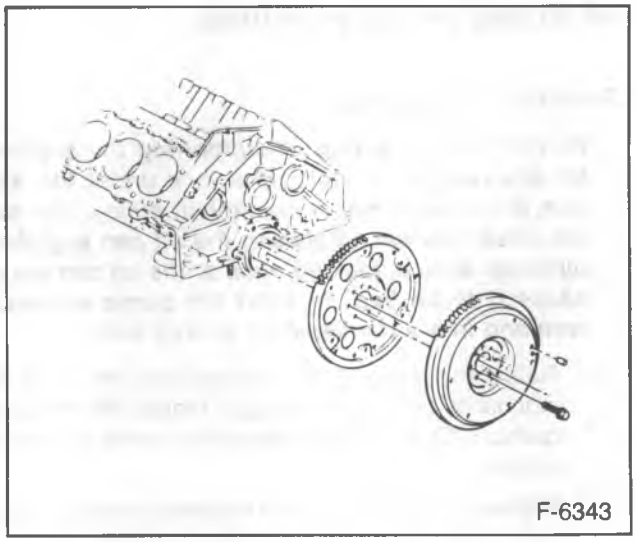

Figure 36—Flywheel

Clean

- Mating surfaces of crankshaft and flywheel. Remove any burrs.

Inspect

- Flywheel for burning, scoring, warping and wear. Replace the flywheel if necessary. Do not machine the flywheel.
- Flywheel ring gear for worn or broken teeth.

Flywheel Ring Gear Replacement

1. Use a torch to heat the gear around the entire circumference, then drive the gear off the flywheel, using care not to damage the flywheel.

NOTICE: Never heat starter gear to red heat as this will change the metal's structure.

2. Uniformly heat the flywheel gear to temperature which will expand the gear to permit installation. Temperature must not exceed 204 degrees C (400 degrees F).
3. As soon as the gear has been heated, install on the flywheel.

Install or Connect (Figure 36)

1. Flywheel.

NOTICE: See "Notice" on page 6A3-1 of this section.

2. Flywheel bolts.

Tighten

- Flywheel bolts to 100 N•m (75 ft. lbs.).

3. Clutch (if used) flywheel housing and transmission. Refer to TRANSMISSION AND CLUTCH (SEC. 7).

ENGINE MOUNTINGS

NOTICE: Broken or deteriorated mountings can cause misaligned and eventual destruction of certain drive train components. When a single-mounting breakage occurs, the remaining mountings are subjected to abnormally high stresses.

INSPECTING ENGINE MOUNTINGS

Front Engine Mountings

NOTICE: When raising or supporting the engine for any reason, do not use a jack under the oil pan, any sheet metal or crankshaft pulley. Due to the small clearance between the oil pan and the oil pump screen, jacking against the oil pan may cause it to be bent against the pump screen, resulting in a a damaged oil pickup unit.

1. Raise the engine to remove weight from the mountings and to place a slight tension on the rubber cushion. Observe both mountings while raising the engine.
2. Replace the mounting if the following conditions exist:
   - Hard rubber surface covered with heat check cracks.
   - Rubber cushion separated from the metal plate of the mounting.
   - Rubber cushion split through the center.
3. If there is movement between a metal plate of the mounting and its attaching points, lower the engine and tighten the bolts or nuts attaching the mounting to the engine, frame or bracket.

Rear Mountings

1. Push up and pull down on the transmission tailshaft. Observe the transmission mounting.
2. Replace the mounting if the following conditions exist:
   - Rubber cushion separated from the metal plate of the mounting.
   - Mounting bottomed out (tailshaft can be moved up but not down).
3. If there is relative movement between a metal plate of the mounting and its attaching point, tighten the bolts or nuts attaching the mounting to the transmission or crossmember.

FRONT MOUNTING REPLACEMENT

Remove or Disconnect (Figure 37)

NOTICE: When raising or supporting the engine for any reason, do not use a jack under the oil pan, any sheet metal or crankshaft pulley. Due to the small clearance between the oil pan and the oil pump screen, jacking against the oil pan may cause it to be bent against the pump screen, resulting in a a damaged oil pickup unit.

- Support the engine with a suitable jack. Do not load the engine mounting.

1. Engine mounting through-bolt and nut.

NOTICE: Raise the engine only enough for sufficient clearance. Check for interference between the rear of the engine and the dash panel which could cause distributor damage.

- Raise the engine only enough to permit removal of the engine mounting.

2. Mounting assembly bolts, nuts and washers.
3. Mounting assembly.

Install or Connect (Figure 37)

NOTICE: For steps 2 and 3 see "Notice" on page 6A3-1 of this section.

1. Mounting assembly.

NOTICE: See "Notice" on page 6A3-1 of this section.

2. Mounting assembly bolts, nuts and washers.

   Tighten

   - Fasteners to specifications. Refer to figure 37.

3. Engine mount through-bolt and nut. Lower the engine until the bolt can be inserted. Install the nut.

   Tighten

   - Through-bolt or nut to specifications. Refer to figure 37.

REAR MOUNTING REPLACEMENT

Remove or Disconnect (Figure 38)

NOTICE: When raising or supporting the engine for any reason, do not use a jack under the oil pan, any sheet metal or crankshaft pulley. Due to the small clearance between the oil pan and the oil pump screen, jacking against the oil pan may cause it to be bent against the pump screen, resulting in a damaged oil pickup unit.

- Support the rear of the engine to relieve the weight on the rear mountings.

1. Mounting to crossmember nut(s) and washer(s).
2. Mounting to transmission bolts and washers.

- Raise the rear of the engine only enough to permit removal of the mounting.

3. Mounting.

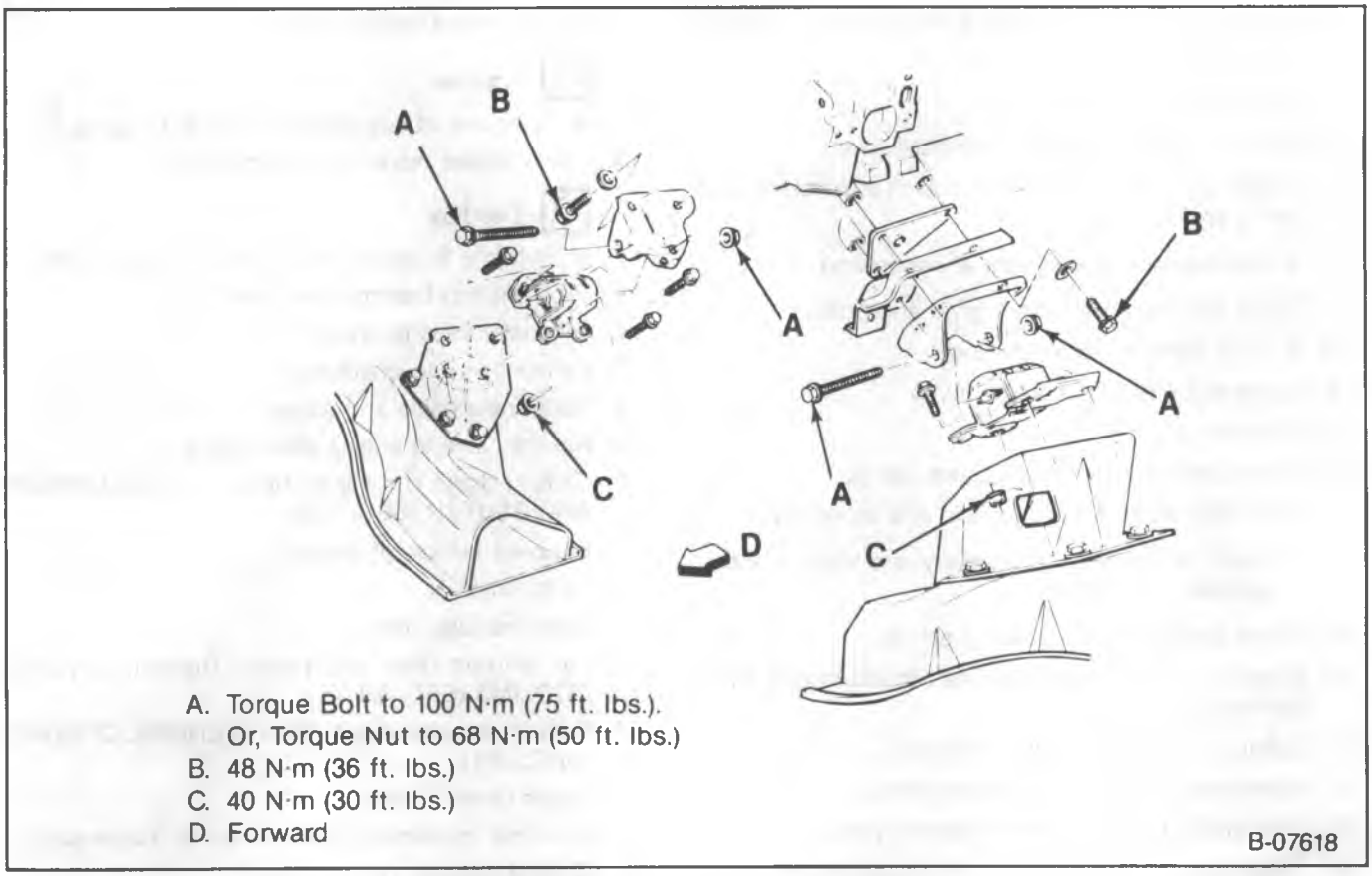

Figure 37—Front Engine Mounting

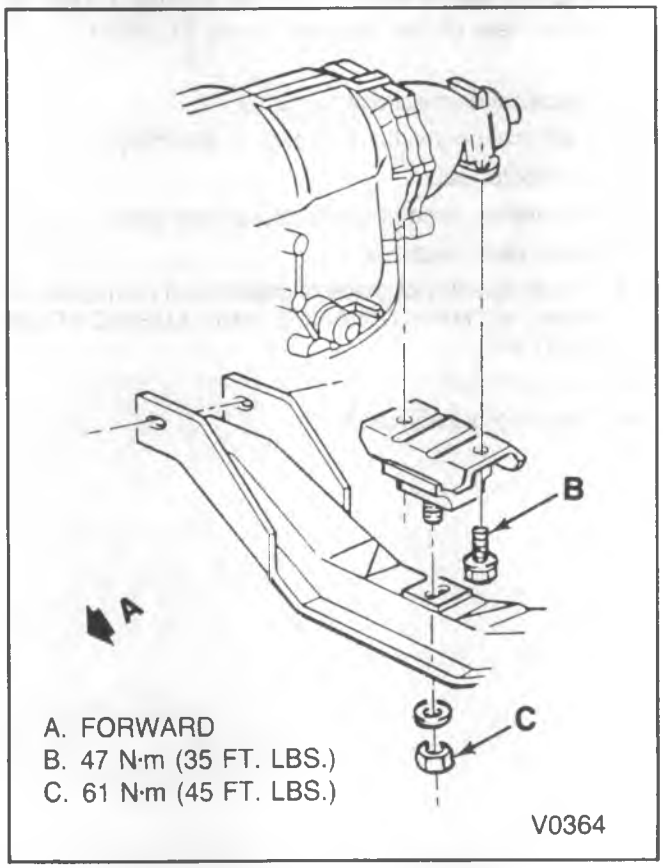

Figure 38—Rear Engine Mounting

Install or Connect (Figure 38)

1. Mounting.
   - Lower the rear of the engine.
2. Mounting to transmission bolts and washers.

NOTICE: See "Notice" on page 6A3-1 of this section.

3. Mounting to crossmember nut(s) and washer(s).

Tighten

- Fasteners to specifications. Refer to figure 38.

ENGINE REPLACEMENT

Remove or Disconnect

1. Negative battery cable.
2. Drain coolant. Refer to RADIATOR (SEC. 6B2).
3. Engine cover.
4. Floor panel from transmission, bellhousing section and section from left side by accelerator pedal.
5. Air cleaner and duct.
6. Exhaust heat stove pipe.
7. Distributor cap lay aside.
8. Electrical connections from engine assembly.
   - Clamps holding wiring harness to engine assembly.
   - Electrical connections from starter.
   - Lay wiring harness aside.

9. Fuel lines from TBI and clamps from bellhousing and transmission.
   - Lay fuel lines aside.
10. Ground strap at rear of left cylinder head.
11. Electrical connections at transmission and clamps lay wiring aside.
   - Transmission shifter stick (if necessary).
12. Upper radiator hose from engine and radiator.
13. All drive belts or serpentine belt.
14. Fan and pulley from coolant pump.
15. Fan shroud.
16. Lower radiator hose from coolant pump.
17. Oil fill tube from intake manifold and valve cover.
   - Raise the vehicle if necessary and support with suitable safety stands.
18. Clutch adjuster rod and return spring.
19. Clutch pivot arm assembly from frame mount and bellhousing.
20. Exhaust pipe from exhaust manifolds.
21. Battery cable from engine block clamp.
22. Prop shaft U-joint from transmission yoke.
23. Transmisison mount from frame crossmember.
24. Oil cooler lines from oil filter adapter and engine clamps.
   - Lower vehicle (if raised).
25. Secure engine to proper lifting device.
26. Engine mount through bolts.
27. Engine and transmission from vehicle out the side door.

Install or Connect

NOTICE: For steps 3 and 4 see "Notice" on page 6A3-1 of this section.

1. Engine and transmission align in place.
2. Raise the vehicle. Support with suitable safety stands (if necessary to raise).
3. Engine mount through bolts.

   Tighten
   - Fasteners to specifications. Refer to figure 37.
4. Transmission mount to crossmember.

   Tighten
   - Fastener to specifications. Refer to figure 38.
5. Prop shaft to transmission yoke.
6. Oil cooler lines to engine.
7. Exhaust pipe to manifolds.
8. Park brake cable and adjust.
9. Battery cable to engine block clamp.
10. Clutch linkage and adjust. Refer to TRANSMISSION AND CLUTCH (SEC. 7C).
   - Lower vehicle (if raised).
11. Oil fill tube.
12. Lower radiator hose.
13. Fan shroud. Fan and pulley. Refer to ENGINE COOLING (SEC. 6B1).
14. Belts or serpentine belt. Refer to ENGINE COOLING (SEC. 6B1).
15. Upper radiator hose.
16. Electrical connections and clamps to transmission.
17. Ground strap to cylinder head.
18. Fuel lines to TBI and clamps. Refer to FUEL AND EMISSIONS SERVICE MANUAL if using X-9132, or to the rear of this manual if using ST330-91.
19. Electrical connections to starter.
20. Electrical connections to engine assembly.
21. Distributor cap.
22. Air cleaner assembly and stove heat pipe.
23. Floor panel sections.
24. Proper quantity of grade of coolant and crankcase oil. Refer to MAINTENANCE AND LUBRICATION (SEC. 0B).
25. Engine cover.
26. Negative battery cable.

SPECIFICATIONS

GENERAL DATA:				
Type				V6
Displacement				4.3L (262 Cu. In.)
RPO				LB4
Bore				4.00
Stroke				3.48
Compression Ratio				9.3:1 STD 8.6:1 LB4 HD
Firing Order				1 - 6 - 5 - 4 - 3 - 2
Oil Pressure				10 psi @ 500 RPM; 30-35 psi @ 2000 RPM
CYLINDER BORE:				
Diameter				4.0007-4.0017
Out of Round	Production			0.001 (Maximum)
Taper	Production	Thrust Side		0.0005 (Maximum)
		Relief Side		0.001 (Maximum)
	Service			0.001 (Maximum)
PISTON:				
Clearance	Production			0.0007-0.0017
PISTON RING:				
COMPRESSION	Groove Clearance	Production	Top	0.0012-0.0032
			2nd	
	Gap	Production	Top	0.010-0.020
			2nd	0.010-0.025
OIL	Groove Clearance	Production		0.002-0.007
	Gap	Production		0.015-0.055
PISTON PIN:				
Diameter				0.9270-0.09273
Clearance In Piston	Production			0.0002-0.0007
Fit In Rod				0.0008-0.0016 Interference

GMTB-3210-2A

SPECIFICATIONS (CONT.)

DISPLACEMENT:			**4.3L**
CRANKSHAFT:			
Main Journal	Diameter	#1	2.4484-2.4493
		#2, #3	2.4481-2.4490
		#4	2.4479-2.4488
	Taper	Product	0.0002 (Maximum)
		Service Limit	0.001 (Maximum)
	Out of Round	Production	0.0002 (Maximum)
		Service Limit	0.001 (Maximum)
Main Bearing Clearance	Production	#1	0.0008-0.0020
		#2, #3	0.0011-0.0023
		#4	0.0017-0.0032
Crankshaft End Play			0.002-0.006
Crankpin	Diameter		2.2487-2.2497
	Taper	Production	0.0005
		Service Limit	0.001 (Maximum)
	Out of Round	Production	0.0005
		Service Limit	0.001 (Maximum)
Rod Bearing Clearance	Production		0.0013-0.0035
Rod Side Clearance			0.006-0.014
CAMSHAFT:			
Lobe Lift ± 0.002	Intake		0.357
	Exhaust		0.390
Journal Diameter			1.8682-1.8692
Camshaft End Play			0.004-0.012
VALVE SYSTEM:			
Lifter			Hydraulic
Rocker Arm Radio			1.50:1
Valve Lash		Intake	One Turn Down From Zero Lash
		Exhaust	
Face Angle (Intake & Exhaust)			45°
Seat Angle (Intake & Exhaust)			46°
Seat Runout (Intake & Exhaust)			0.002 (Maximum)

GMTB-3211-2A

SPECIFICATIONS (CONT.)

DISPLACEMENT:			4.3L
VALVE SYSTEM:			
Seat Width		Intake	1/32-1/16
		Exhaust	1/16-3/32
Stem Clearance	Production	Intake	0.0010-0.0027
		Exhaust	0.0010-0.0027
Valve Spring (Outer)	Free Length		2.03
	Pressure lbs. @ in.	Closed	76-84 lbs. @ 1.70"
		Open	194-206 lbs. @ 1.25"
	Installed Height ± 1/32"		1 23/32
Valve Spring Damper	Free Length		1.86
	Approx. # of Coils		4

GMTB-3212-2A

Item	N·m	Ft. Lbs.	In. Lbs.
Rocker Arm Cover Bolts	10	—	90
Intake Manifold Bolts (Except Last Bolt Left Side)	48	35	—
Intake Manifold Bolts Last Bolt Left Side	56	41	—
Intake Manifold Bolt (Throttle Bracket)	55	41	—
Exhaust Manifold Bolts			
Center Two Bolts	36	26	—
All Others	43	32	—
Cylinder Head Bolts	94	70	—
Torsional Damper Bolt	95	70	—
Front Cover Bolts	14	—	124
Oil Pan Nuts	23	17	—
Oil Pan Bolts	11	—	97
Oil Pump Bolt	90	65	—
Rear Crankshaft Oil Seal Retainer Screws and Nuts	15	11	—
Camshaft Sprocket Bolts	28	21	—
Connecting Rod Cap Nuts (Torque Plus 60°)	27	20	—
Oil Filter Adapter Bolts	20	15	—
Main Bearing Cap Bolts	110	80	—
Oil Pump Cover Bolts	10	—	89
Flywheel Bolts	100	75	—
Spark Plugs Replacement	15	11	—
Spark Plugs (New Head)	30	22	—
Coolant Outlet Bolts	28	21	—
Coolant Pump Bolts	40	30	—
Flywheel Housing Bolts	44	32	—
Camshaft Thrust Plate Screws	12	—	106
Hydraulic Lifter Restrictor Retainer Bolts	16	12	—
Oil Pan Studs to Oil Seal Retainer or Crankcase	4	—	35

GMTB-3213-2A

SPECIAL TOOLS

1 J 23523-E

2 J 5892-C

3 J 23590

4 J 35468

5 J 8080

6 J 8037

7 J 5239

8 J 23738-A

9 J 5802-01

10 J 5715

11 J 6036

12 J 6880

13 J 5825-A

14 J 5590

15 J 8520

16 J 35621

1. Torsional Damper Remover and Installer
2. Valve Spring Compressor
3. Air Adapter
4. Crankshaft Seal Installer and Centering Tool
5. Main Bearing Replacer
6. Piston Ring Compressor
7. Guide Set
8. Vacuum Pump
9. Stud Remover
10. Reamer (0.003-inch oversize)
11. Reamer (0.013-inch oversize)
12. Stud Installer
13. Crankshaft Gear Puller
14. Crankshaft Gear Installer
15. Dial Indicator Adapter
16. Rear Crankshaft Seal Installer

V0291

SECTION 6A4

5.0L AND 5.7L V8

***NOTICE:** When fasteners are removed, always reinstall them at the same location from which they were removed. If a fastener needs to be replaced, use the correct part number fastener for that application. If the correct part number fastener is not available, a fastener of equal size and strength (or stronger) may be used. Fasteners that are not reused, and those requiring thread locking compound will be called out. The correct torque value must be used when installing fasteners that require it. If the above conditions are not followed, parts or system damage could result.*

CONTENTS

SUBJECT	PAGE
Description	6A4- 2
Engine Lubrication	6A4- 2
On-Vehicle Service	6A4- 5
Rocker Arm Cover Replacement	6A4- 5
Rocker Arm and Pushrod Replacement	6A4- 5
Valve Adjustment	6A4- 6
Valve Stem Seal and Valve Spring Replacement	6A4- 6
Intake Manifold Replacement	6A4- 7
Hydraulic Lifter Replacement	6A4- 9
Rocker Arm Stud Replacement	6A4- 9
Exhaust Manifold Replacement	6A4-11
Cylinder Head Replacement	6A4-11
Torsional Damper and Front Crankshaft Seal Replacement	6A4-12
Front Cover Replacement	6A4-13
Oil Pan Replacement	6A4-14
Oil Pump Replacement	6A4-14
Rear Crankshaft Oil Seal Replacement	6A4-15
Rear Crankshaft Oil Seal Retainer Replacement	6A4-15
Measuring Camshaft Lobe Lift	6A4-16
Camshaft Replacement	6A4-16
Connecting Rod and Piston Replacement	6A4-18
Oil Filter Bypass Valve	6A4-20
Main Bearing Replacement	6A4-21
Crankshaft Replacement	6A4-22
Flywheel Replacement (Automatic and Manual Transmissions)	6A4-22
Engine Mountings	6A4-25
Engine Replacement	6A4-29
Specifications	6A4-31
Special Tools	6A4-34

DESCRIPTION

Small block engines covered by this manual are available in two displacements: 5.0L (305 cu. in.) and 5.7L (350 cu. in.).

Small block engines are 90-degree V8 type, overhead valve, liquid cooled, with cast iron block and heads.

The crankshaft is supported by five precision insert main bearings, with crankshaft thrust taken at the number five (rear) bearing.

The camshaft, supported by five plain type bearings, is chain driven. Motion from the camshaft is transmitted to the valves by hydraulic lifters, pushrods, and ball type rocker arms. The valve guides are integral in the cylinder head.

The connecting rods are forged steel, with precision insert type crankshaft bearings. The piston pins are a press fit in the connecting rods.

The pistons are cast aluminum alloy. The piston pins are a floating fit in the piston.

ENGINE LUBRICATION

Lubrication schematics are shown in figures 1 and 2. The gear type oil pump is driven from the distributor shaft, which is gear driven from the camshaft. Oil is drawn into the oil pump through a pickup screen and pipe.

Pressurized oil is routed to the oil filter. In case of excessive oil pressure, a bypass valve is provided. Filtered oil flows into the main gallery and then to the camshaft and crankshaft bearings. The valve lifter oil gallery supplies oil to the valve lifters. Oil flows from the hydraulic lifters through the hollow pushrods to the rocker arms. Oil from the overhead drains back to the crankcase through oil drain holes.

The timing chain is drip fed from the front camshaft bearing. The pistons and piston pins are lubricated by oil splash.

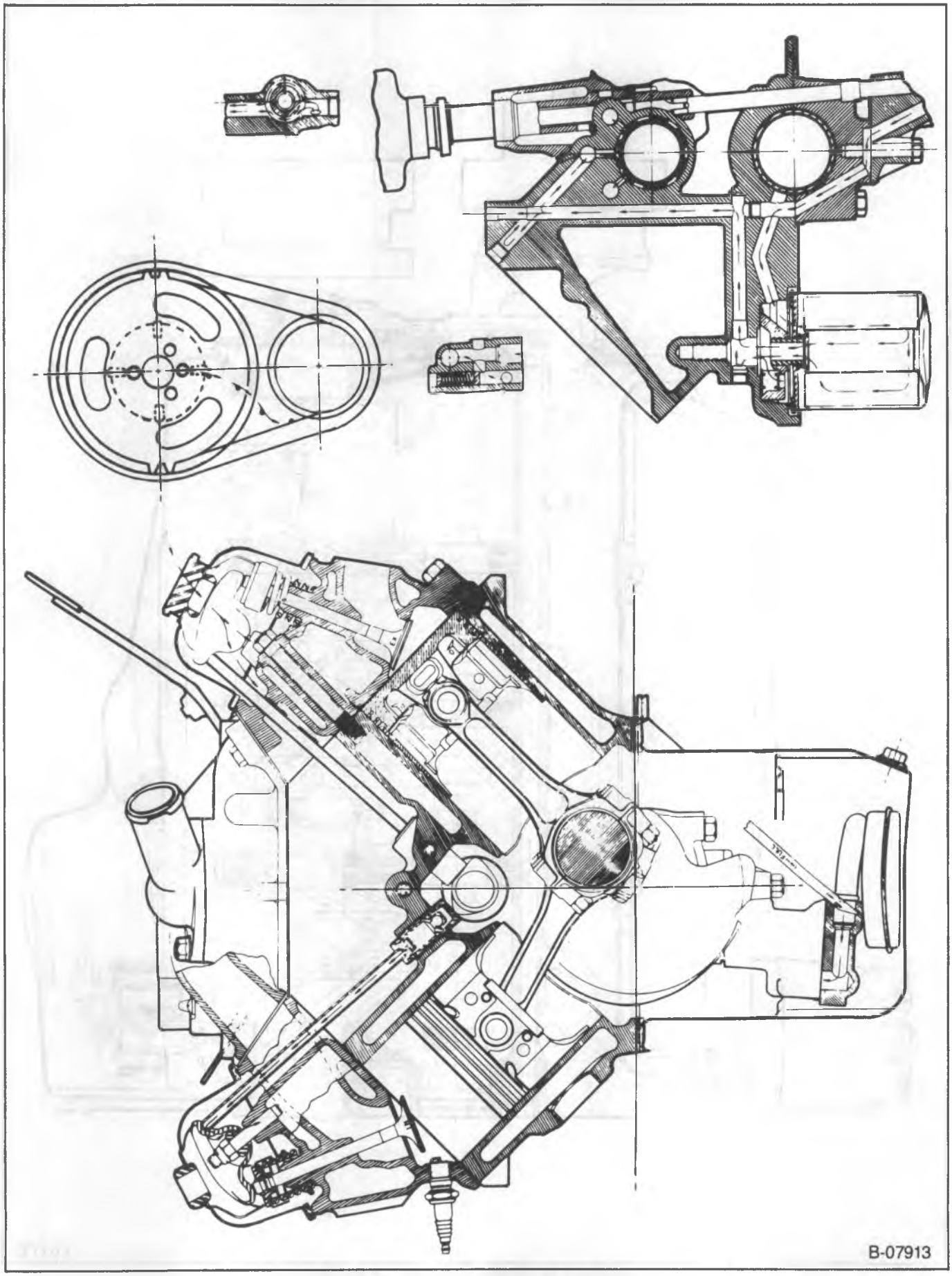

Figure 1—Engine Lubrication Diagram

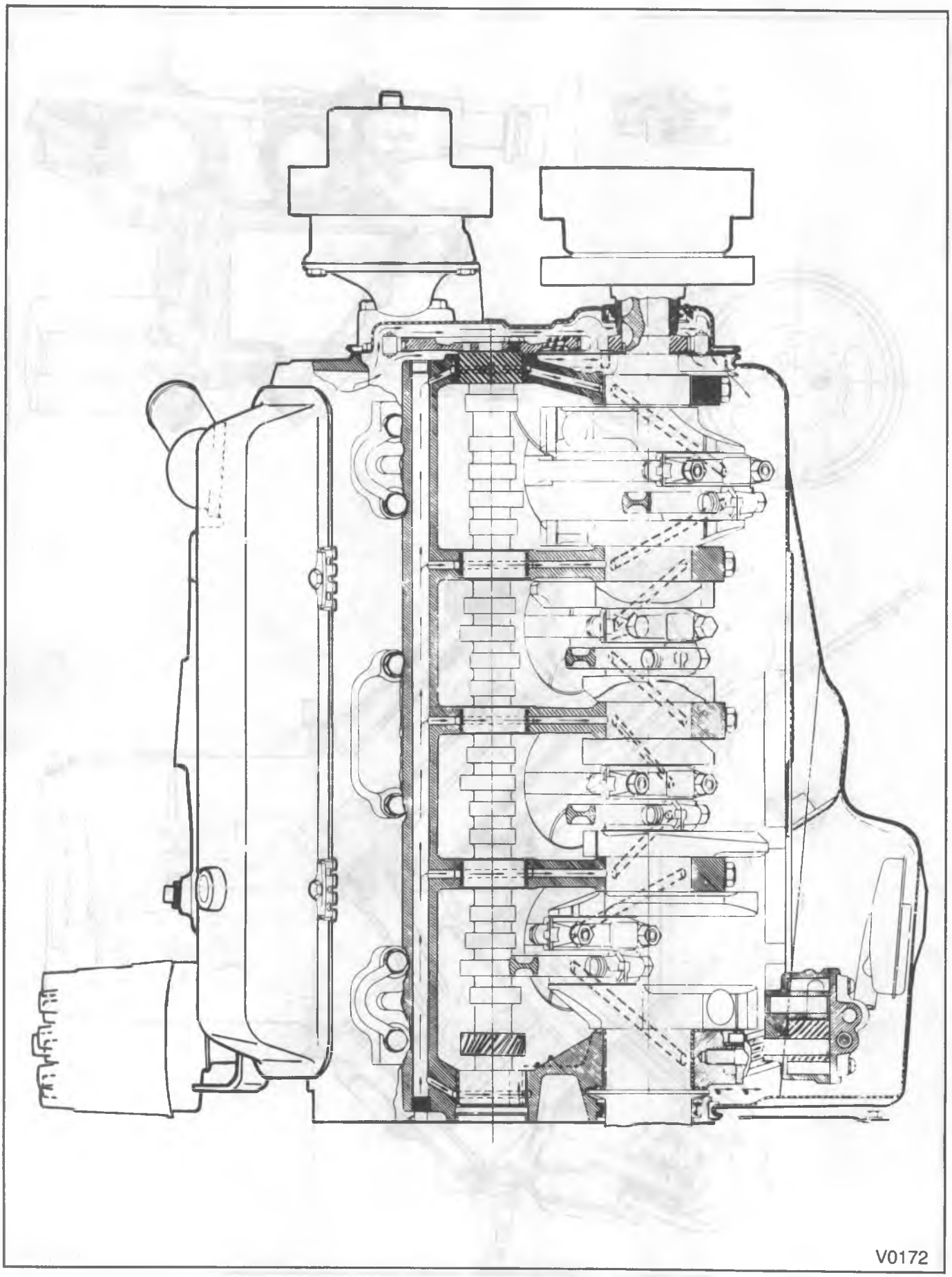

Figure 2—Engine Lubrication Diagram

ON-VEHICLE SERVICE

ROCKER ARM COVER REPLACEMENT

REMOVAL

Remove or Disconnect (Figure 3)

1. Battery negative cable.
2. Engine cover (P models).
3. Air cleaner.
4. Crankcase ventilation hoses at the rocker arm covers.
5. Wiring harnesses from the clips, and move aside.
6. Components as follows for right rocker arm cover:
   - A/C compressor lay aside if equipped. Refer to AIR CONDITIONING (SECTION 1B).
   - PCV valve.
   - Heat stove pipe.
   - Oil fill tube (P model).
7. Components as follows for left rocker arm cover:
   - Generator rear brace. Refer to CHARGING SYSTEM (SECTION 6D3).
   - Power brake vacuum pipe, and move it aside left side.
   - Wire connection from temperature sensor lay wire aside.
8. Rocker arm cover bolts.
9. Rocker arm cover and gasket.

CLEANING AND INSPECTION

Clean

- All traces of old gasket from the rocker arm cover and cylinder head.

Clean

- Rocker arm cover sealing surface for distortion. Replace if necessary.

INSTALLATION

Install or Connect (Figure 3)

1. Rocker arm cover and new gasket.

NOTICE: See "Notice" on page 6A4-1 of this section.

2. Rocker arm cover bolts.

   Tighten

   - Bolts to 11 N•m (95 in. lbs.).
3. Components as follows for right rocker arm cover:
   - Air conditioning compressor (if equipped). Refer to AIR CONDITIONING (SEC. 1B).
   - Oil fill tube (P model).
   - PCV valve.
   - Heat stove pipe.
4. Components as follows for left rocker arm cover:
   - Generator rear brace. Refer to CHARGING SYSTEM (SECTION 6D3).
5. Wiring harnesses to the rocker arm clips.
6. Crankcase ventilation hoses at the rocker arm cover.
7. Air cleaner.
8. Engine cover (P models).
9. Battery negative cable.

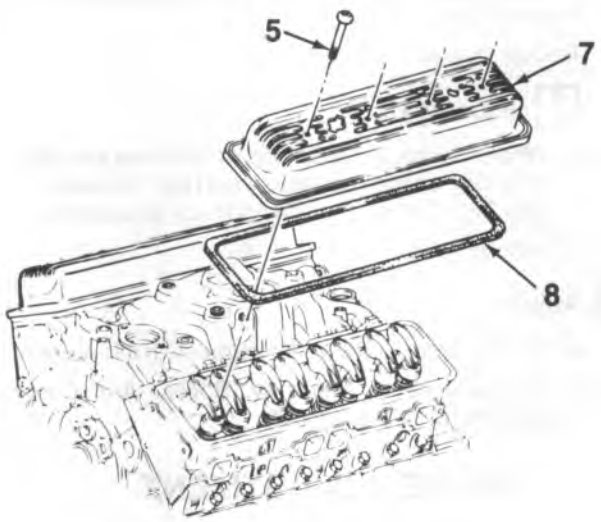

5. Bolt
7. Rocker Arm Cover
8. Gasket

V0173

Figure 3—Rocker Arm Cover

ROCKER ARM AND PUSHROD REPLACEMENT

Remove or Disconnect (Figure 4)

1. Rocker arm cover. Refer to "Rocker Arm Cover Replacement" in this section.
2. Rocker arm nut.
   - If only the pushrod is to be replaced, back the rocker arm nut off until the rocker arm can be swung away from the pushrod. Then pull the pushrod out.
3. Rocker arm with ball.
4. Pushrod.

Important

- Set aside used components in order; they must be reassembled in their original locations.

Inspect

- Rocker arms and balls at their mating surfaces. These surfaces should be smooth and free from scoring or other damage.
- Rocker arm areas which contact the valve stems, and the sockets which contact the pushrods. These areas should be smooth and free of damage and wear.
- Pushrods for bending. Roll the pushrod on a flat surface to determine if it is bent. Replace if necessary.
- Ends of the pushrods for scoring or roughness.

Install or Connect

1. Pushrod. Make sure the pushrod seats properly in the hydraulic lifter.
2. Rocker arm with ball.

Important

- When new rocker arms and/or balls are installed, coat their bearing surfaces with High Viscosity Oil with Zinc GM part# 12345501 (or equivalent).

3. Rocker arm nut.

Adjust

- Valves. Refer to "Valve Adjustment" in this section.

4. Rocker arm cover. Refer to "Rocker Arm Cover Replacement" in this section.

VALVE ADJUSTMENT

1. Remove the rocker arm cover. Refer to "Rocker Arm Cover Replacement" in this section.
2. Crank the engine until the mark on the vibration damper lines up with the "0" mark on the timing tab, and the engine is in the number one firing position. This may be determined by placing fingers on the number one valve as the mark on the damper comes near the "0" mark on the timing tab. If the rocker arms are not moving, the engine is in the number one firing position. If the rocker arms move as the mark comes up to the timing tab, the engine is in the number six firing position and should be turned over one more time to reach the number one position.
3. With the engine in the number one firing position as determined above, the following valves may be adjusted:
   - Exhaust: 1, 3, 4, 8
   - Intake: 1, 2, 5, 7

   (Even-numbered cylinders are in the right bank; odd-numbered cylinders are in the left bank, when viewed from the rear of the engine.)
4. Back out the adjusting nut until lash is felt at the pushrod, then turn in the adjusting nut until all lash is removed. This can be determined by rotating the pushrod while turning the adjusting nut (figure 4). When the play has been removed, turn the adjusting nut inward one full additional turn (to center the lifter plunger).
5. Crank the engine one revolution until the timing tab "0" mark and vibration damper mark are again in alignment. This is the number six firing position; the following valves may be adjusted:
   - Exhaust: 2, 5, 6, 7
   - Intake: 3, 4, 6, 8
6. Install the rocker arm cover. Refer to "Rocker Arm Cover Replacement" in this section.

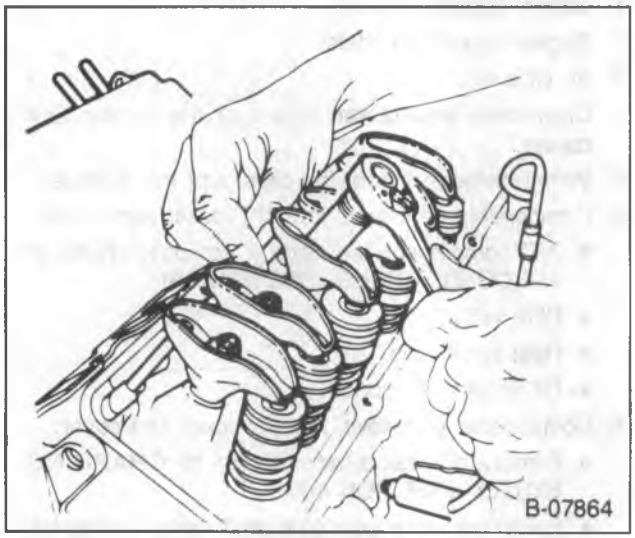

Figure 4 – Adjusting the Valves

VALVE STEM SEAL AND VALVE SPRING REPLACEMENT

Remove or Disconnect (Figures 5 and 6)

Tools Required:

J 23590 Air Adapter.
J 5892-C Valve Spring Compressor.

1. Rocker arm cover. Refer to "Rocker Arm Cover Replacement" in this section.
2. Rocker arms. Refer to "Rocker Arm and Pushrod Replacement" in this section.
3. Spark plugs.
4. Valve keepers (20).
   - Install J 23590 into the spark plug hole (figure 6).
   - Apply compressed air to hold the valves in place.
   - Install a rocker arm nut.
   - Use J 5892-C to compress the valve spring (figure 6).
   - Remove the valve keepers.
   - Carefully release the spring tension. Remove J 5892-C.
5. Cap (21) or rotator (28), shield (22), and spring (26) with damper (25).
6. O-ring seal (23).
7. Seal (24).

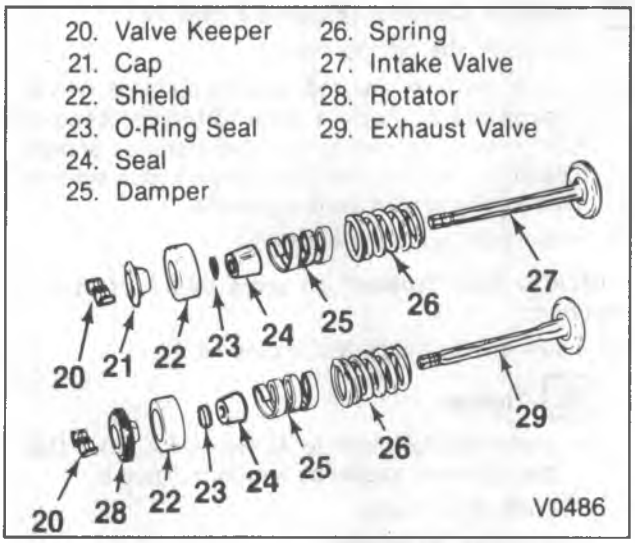

Figure 5—Valves and Components

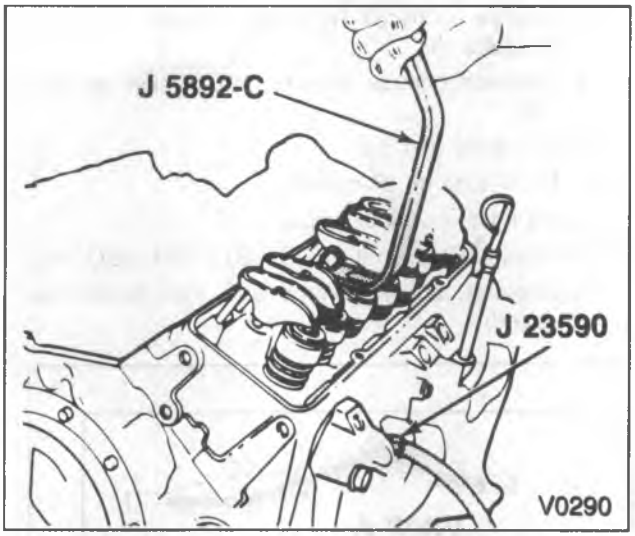

Figure 6—Compressing the Valve Springs

Install or Connect (Figures 5, 6, and 7)

Tools Required:

J 23590 Air Adapter

J 5892-C Valve Spring Compressor

J 23738-A Vacuum Pump

1. New seal (24). Install the seal over the valve stem and seat it against the head.
2. Spring (26) with damper (25), shield (22), and cap (21) or rotator (28).
3. New o-ring seal (23) and valve keepers (20).
   - While applying air pressure to the cylinder with J 23590, compress the spring using J 5892-C (figure 6).
   - Lubricate the O-ring seal with engine oil. Install the seal on the valve stem. Make sure the seal is not twisted.
   - Install the valve keepers. Use grease to hold them in place.
   - Carefully release spring pressure. Make sure the valve keepers stay in place.
   - Remove J 5892-C and J 23590.
   - Check each O-ring seal for leakage (figure 7).
     - Place the suction cup finished with J 23738-A over the shield.
     - Connect J 23738-A to the suction cup and apply a vacuum. Watch the vacuum pump gage. No air should be able to leak past the seal. If the seal will not hold a vacuum, it may have been damaged or improperly installed.
4. Spark plugs.
5. Rocker arms. Refer to "Rocker Arm and Pushrod Replacement" in this section.

Adjust

- Valves. Refer to "Valve Adjustment" in this section.

6. Rocker arm cover. Refer to "Rocker Arm Cover Replacement" in this section.

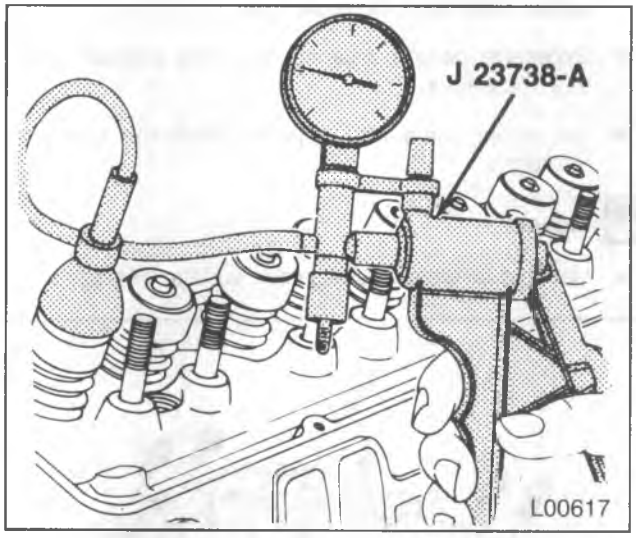

Figure 7—Testing the Valve Seals

INTAKE MANIFOLD REPLACEMENT

Remove or Disconnect (Figures 8 and 9)

1. Battery negative cable.
2. Engine cover (P models).
3. Air cleaner.

- Drain the cooling system.

4. Heater pipe and upper radiator hose at the intake manifold.
5. Belt tensioner brace.
6. Vacuum hoses at the manifold, TBI unit, and EGR valve.
7. Electrical connections at the manifold and TBI unit.
8. Fuel line(s) at TBI unit.
9. Accelerator, cruise control, and TVS cables (as equipped) and mount bracket.
10. Distributor. Refer to IGNITION SYSTEM (SEC. 6D).

11. Brake booster vacuum pipe.
12. Components as follows:
    - Coil wires and coil.
    - Emission control sensors and bracket on right side.
    - Cruise control transducer and bracket (if equipped).
    - Fuel line bracket at rear of manifold. Move the fuel lines aside.
    - Oil fill tube bracket from intake manifold (P model).
13. TBI unit (if necessary).
14. Intake manifold bolts and engine lift hooks.
15. Intake manifold.
16. Gaskets.

Clean

- Old gasket and RTV from the block, heads, and intake manifold. Remove all RTV that is loose or will cause interference at assembly.
- Excessive carbon deposits from the exhaust and EGR passages.
- Excessive scale and deposits from the coolant passages.

Inspect

- Manifold for cracks and gasket surface damage.

Install or Connect (Figures 8 and 9)

1. Gaskets to the cylinder head.
2. RTV to the front and rear sealing surfaces on the block (figure 8). Apply a 5mm (3/16-inch) bead of RTV to the front and rear of the block as shown. Extend the bead 13 mm (1/2-inch) up each cylinder head to seal and retain the gaskets.
3. Intake manifold to the engine.

NOTICE: See "Notice" on page 6A4-1 of this section.

4. Intake manifold bolts and engine lift hooks.

Tighten

- Intake manifold bolts to 48 N•m (35 ft. lbs.). Use the tightening sequence shown in figure 9.

5. TBI unit (if removed).
6. Components as follows:
    - Fuel line bracket at rear of manifold.
    - Cruise control transducer and bracket (if equipped).
    - Emission control sensors and bracket on right side.
    - Coil wires and coil.
    - Oil fill tube on (P model).
7. Brake booster vacuum pipe.
8. Distributor. Refer to IGNITION SYSTEM (SEC. 6D).
9. Accelerator, cruise control, and TVS cables (as equipped).

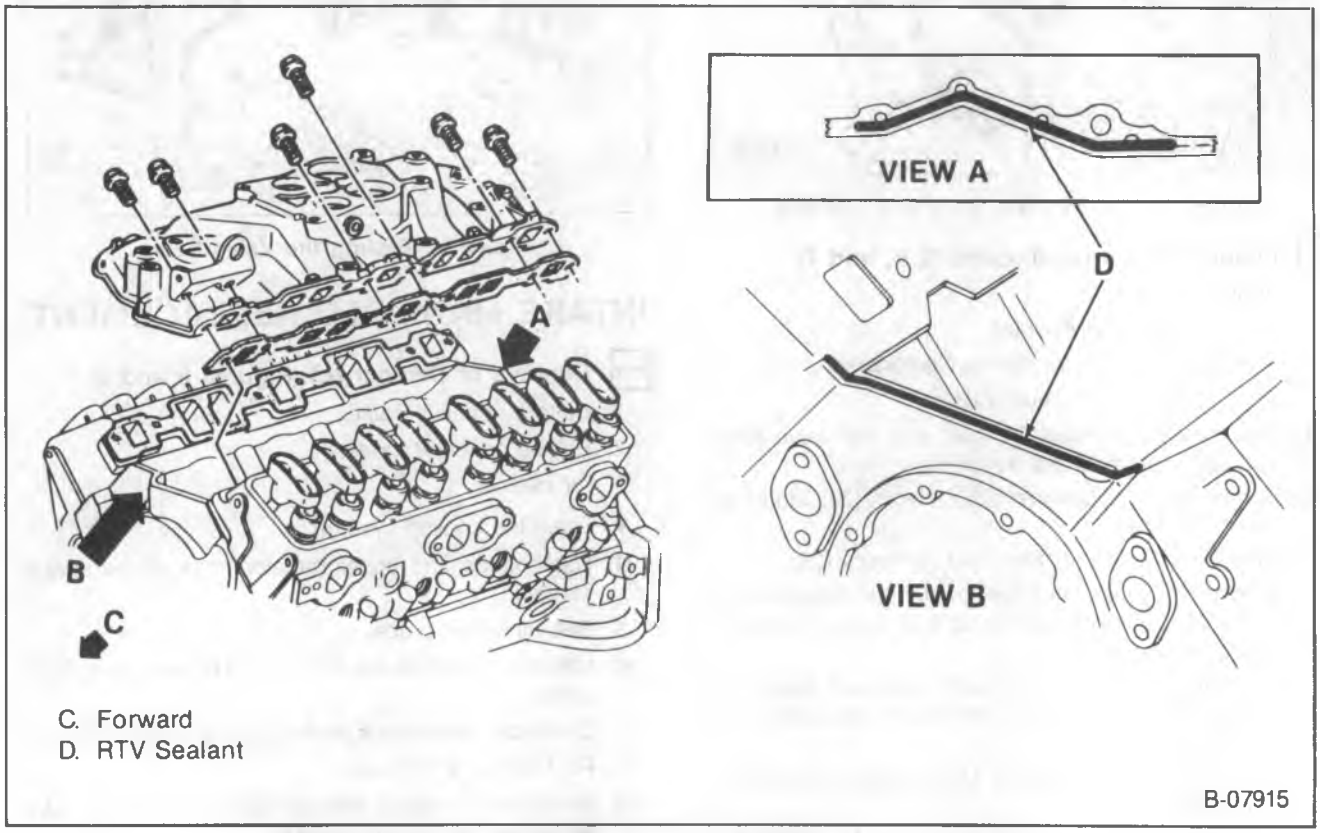

Figure 8—Intake Manifold

10. Fuel lines at the TBI unit.
11. Electrical connections at the intake manifold and TBI unit.
12. Vacuum hoses at the manifold, TBI unit, and EGR valve.
13. Belt tensioner brace.
14. Heater pipe and upper radiator hose at the manifold.
15. Air cleaner.
16. Engine cover (P models).
17. Battery negative cable.

- Fill the cooling system with the proper quantity and grade of coolant. Refer to MAINTENANCE AND LUBRICATION (SEC. 0B).

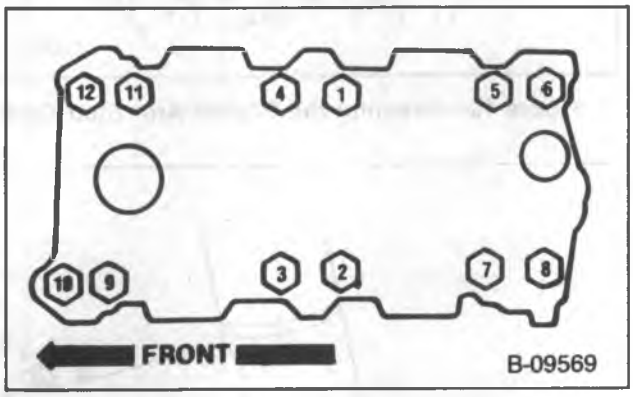

Figure 9—Intake Manifold Bolt Tightening Sequence

HYDRAULIC LIFTER REPLACEMENT

Remove or Disconnect (Figure 10)

Tools Required:

J 3049-A Hydraulic Lifter Remover (Plier Type)

1. Rocker arm cover. Refer to "Rocker Arm Cover Replacement" in this section.
2. Intake manifold. Refer to "Intake Manifold Replacement" in this section.
3. Pushrods. Refer to "Rocker Arm and Pushrod Replacement" in this section.
4. Hydraulic lifters.
   - Remove the hydraulic lifters one at a time and place them in an organizer rack. Each lifter must be installed in the same bore from which it was removed.
   - A stuck hydraulic lifter can be removed using J 3049-A (figure 10).

Inspect

- Hydraulic lifter body for scuffing and scoring. If the lifter body wall is worn or damaged, the mating bore in the block should also be checked.
- Check the fit of each hydraulic lifter in its mating bore in the block. If the clearance is excessive, try a new lifter.
- The hydraulic lifter foot must be smooth and slightly convex. If worn, pitted, or damaged, the mating camshaft lobe should also be checked.

Hydraulic Lifter Repair

- Refer to the 1991 Light Duty Truck Unit Repair Manual.

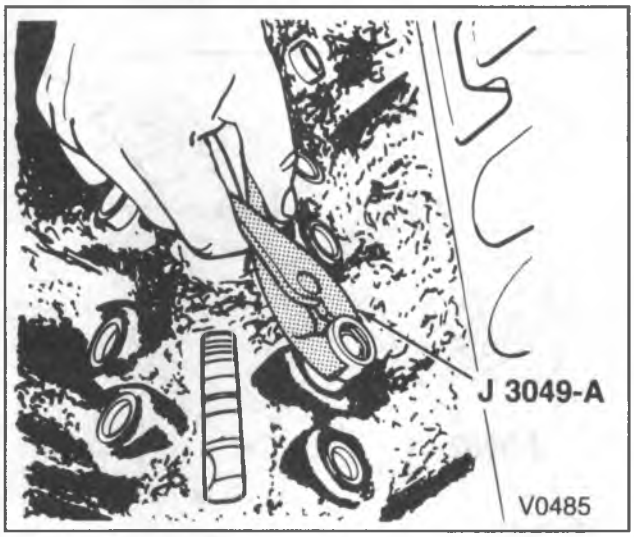

Figure 10—Removing the Hydraulic Lifter

Install or Connect

1. Hydraulic lifters to the block. Lubricate the lifter foot and body with High Viscosity Oil with Zinc GM part# 12345501 (or equivalent).

Important

- When a new camshaft or any new hydraulic lifters are installed, change the engine oil and filter. Engine Oil Supplement (or equivalent) should be added to the crankcase oil.
- Replace all of the hydraulic lifters when a new camshaft is installed.

2. Intake Manifold. Refer to "Intake Manifold Replacement" in this section.
3. Pushrod. Refer to "Rocker Arm and Pushrod Replacement" in this section.

Adjust

- Valves. Refer to "Valve Adjustment" in this section.

4. Rocker arm cover. Refer to "Rocker Arm Cover Replacement" in this section.

ROCKER ARM STUD REPLACEMENT

Remove or Disconnect (Figure 11)

Tool Required:

J 5802-01 Rocker Arm Stud Remover

1. Rocker arm cover. Refer to "Rocker Arm Cover Replacement" in this section.

2. Rocker arm. Refer to "Rocker Arm and Pushrod Replacement" in this section.
3. Rocker arm stud.
   - Place J 5802-01 over the rocker arm stud (figure 12).
   - Install a nut and flat washer.
   - Turn the nut to remove the stud (figure 12).

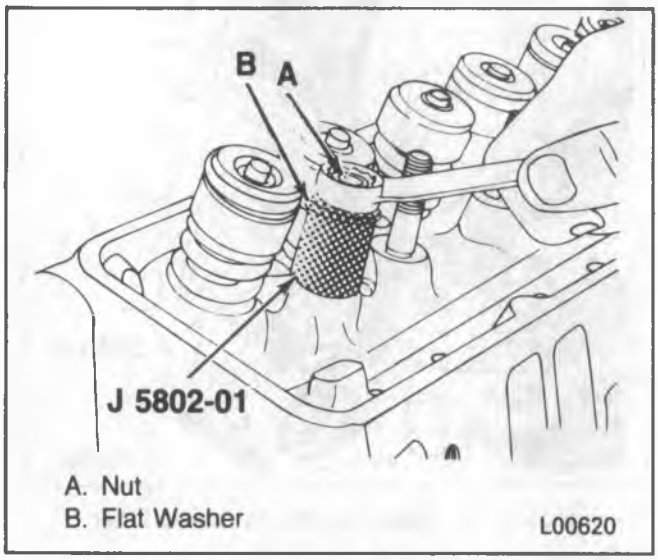

Figure 11—Removing the Rocker Arm Stud

Install or Connect (Figures 12 and 13)

Tools Required:

J 5715 Reamer (0.003-inch oversize) or
J 6036 Reamer (0.013-inch oversize)
J 6880 Rocker Arm Stud Installer

NOTICE: Do not attempt to install an oversize rocker arm stud without reaming the stud hole, as this could damage the cylinder head.

- Ream the hole to the proper size for the replacement oversize rocker arm stud. Use J 5715 or 0.003-inch oversize studs (figure 13).
- Coat lower end (press fit area) of rocker arm stud with hypoid axle lubricant.

1. Rocker arm stud. Use J 6880 (Figure 14). Stud is installed to proper depth when the tool bottoms on the cylinder head.
2. Rocker arm. Refer to "Rocker Arm and Pushrod Replacement" in this section.

Adjust

- Valves. Refer to "Valve Adjustment" in this section.

3. Rocker arm cover. Refer to "Rocker Arm Cover Replacement" in this section.

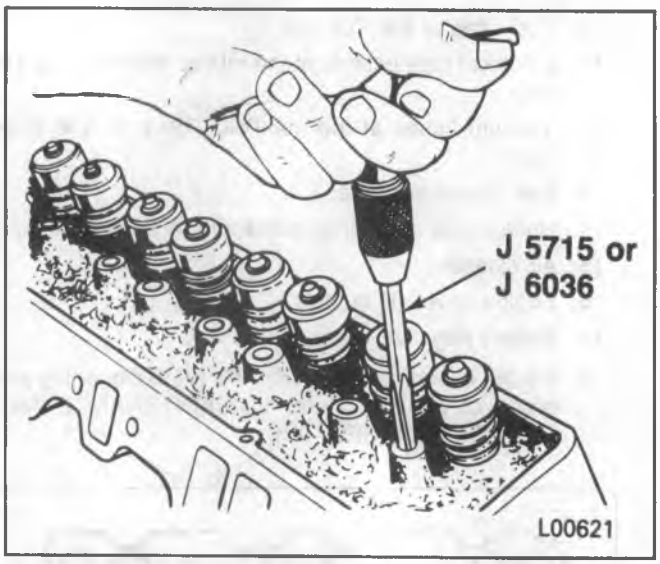

Figure 12—Reaming the Rocker Arm Stud Bore

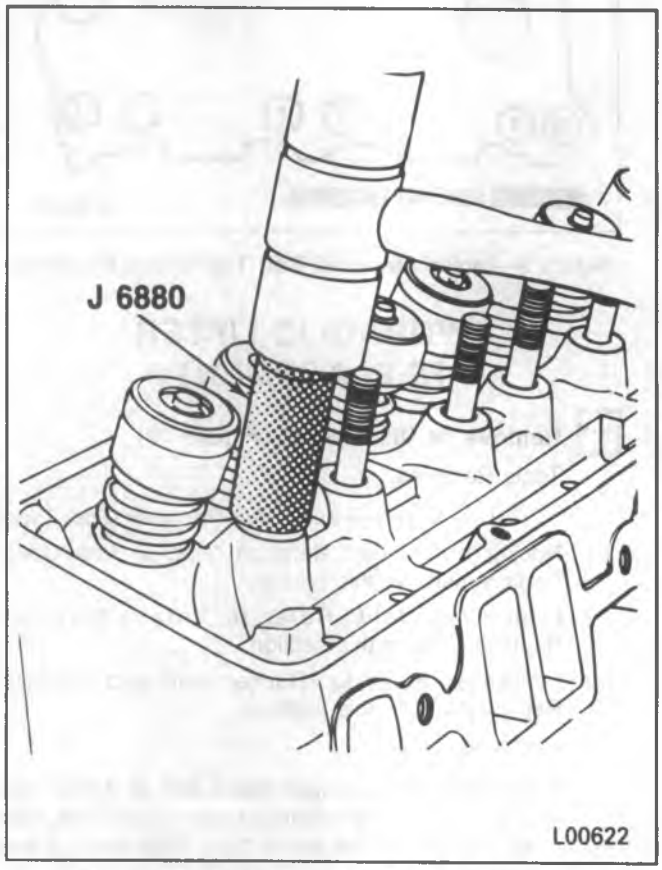

Figure 13—Installing the Rocker Arm Stud

EXHAUST MANIFOLD REPLACEMENT

Remove or Disconnect

1. Battery negative cable.
2. Engine cover (P models).

- Raise the vehicle. Support with suitable safety stands.

3. Exhaust pipe at the manifold. Refer to EXHAUST (SEC. 6F).

- Lower the vehicle.

4. Power steering support brace left side.
5. Heat stove pipe (right side manifold).
6. Floor panel section left side for access to exhaust manifold (P model).
7. Exhaust manifold bolts, washers, tab washers and spark plug heat shields, as equipped.
   - Cast manifolds are retained by bolts, tab washers, and plain washers. Remove the outside bolts first, then the center bolts.
8. Exhaust manifold.

Clean

- Mating surfaces on the manifold and head.
- Threads on the exhaust manifold bolts.

Install or Connect

1. Exhaust manifold to the cylinder head.

NOTICE: See "Notice" on page 6A4-1 of this section.

2. Exhaust manifold fasteners and spark plug heat shields (if equipped).
   - Cast manifolds: Install the flat washers against the manifold, then the tab washers and bolts.

Tighten

- Two center bolts to 36 N•m (26 ft. lbs.).
- Outside bolts to 28 N•m (20 ft. lbs.).
- Bend the tab washers against the bolt heads.

3. Heat stove pipe (right side manifold).
4. Power steering support brace left side.
5. Floor panel (P model).

- Raise the vehicle. Support with suitable safety stands.

6. Exhaust pipe. Refer to EXHAUST (SEC. 6F).

- Lower the vehicle.

7. Engine cover (P models).
8. Battery negative cable.

CYLINDER HEAD REPLACEMENT

Remove or Disconnect

1. Battery negative cable.
2. Engine cover (P models).

- Drain the cooling system.

3. Intake manifold. Refer to "Intake Manifold Replacement" in this section.
4. Exhaust manifold. Refer to "Exhaust Manifold Replacement" in this section.
5. Ground strap at rear of cylinder head (right side cylinder head).
6. Components as follows for left side cylinder head:
   - Coolant sensor wire.
   - Spark plug wires from the support brackets.
   - Generator; lay aside.
7. Power steering pump lay aside. Refer to POWER STEERING SECTION (3B1).
8. Power steering pump support bracket. Refer to POWER STEERING SECTION (3B1).
9. Components as follows for right side cylinder head.
   - Air conditioning compressor and front bracket (if equipped) and lay aside. Refer to AIR CONDITIONING (SECTION 1B).
   - Oil dipstick tube bracket retaining bolt.
   - Spark plug wires from the support bracket.
10. Rocker arm cover. Refer to "Rocker Arm Cover Replacement" in this section.
11. Spark plugs.
12. Pushrods. Refer to "Rocker Arm and Pushrod Replacement" in this section.
13. Cylinder head bolts.
14. Cylinder head.
15. Head gasket.

Clean

- Carbon deposits from combustion chambers.
- All traces of old head gasket from cylinder head and block.
- Cylinder head bolt threads and threads in the block.

Inspect

- Sealing surfaces of the block and cylinder head for nicks, heavy scratches, or other damage.

Cylinder Head Repair

- Refer to the 1991 Light Duty Truck Unit Repair Manual.

Install or Connect (Figure 14)

1. Head gasket.
   - If a steel gasket is used, coat both sides of the gasket with sealer. Spread the sealer thinly and evenly.
   - Do not use sealer on composition steel-asbestos gaskets.
   - Place the gasket over the block dowel pins with the bead up.
2. Cylinder head. Carefully guide the cylinder head into place over the dowel pins and gasket.

NOTICE: See "Notice" on page 6A4-1 of this section.

3. Cylinder head bolts. Coat threads of the cylinder head bolts with sealing compound (GM part number 1052080 or equivalent) and install finger-tight.

Tighten

- Cylinder head bolts, in three steps, using the sequence shown in figure 15. Proper torque is 92 N•m (68 ft. lbs.).

  Step 1. 30 N•m (22 ft. lbs.)

  Step 2. 60 N•m (44 ft. lbs.)

  Step 3. 92 N•m (68 ft. lbs.)

4. Pushrods. Refer to "Rocker Arm and Pushrod Replacement" in this section.

Adjust

- Valves. Refer to "Valve Adjustment" in this section.

5. Spark plugs.
6. Rocker arm cover. Refer to "Rocker Arm Cover Replacement" in this section.
7. Components as follows for right side cylinder head.
   - Oil dipstick tube bracket retaining bolt.
   - Spark plug wires to the support brackets.
   - Air conditioning compressor and mounting bracket. Refer to AIR CONDITIONING (SEC. 1B) lay aside.
8. Components as follows for left side cylinder head.
   - Generator. Refer to CHARGING SYSTEM (SEC. 6D).
   - Power steering pump and support bracket. Refer to POWER STEERING (SEC. 3B1).
   - Coolant sensor wire.
   - Spark plug wires to the support brackets.
9. Ground strap at the rear of the cylinder head (right side cylinder head).
10. Exhaust manifold. Refer to "Exhaust Manifold Replacement" in this section.
11. Intake manifold. Refer to "Intake Manifold Replacement" in this section.
12. Engine cover (P models).
13. Battery negative cable.

- Fill the cooling system with the proper quantity and grade of coolant. Refer to MAINTENANCE AND LUBRICATION (SEC. 0B).

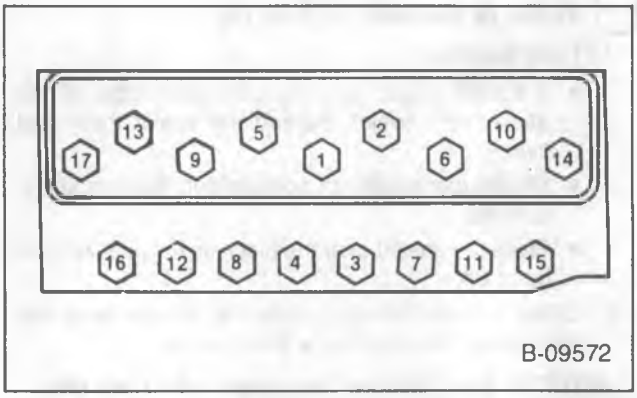

Figure 14—Cylinder Head Bolt Tightening Sequence

TORSIONAL DAMPER AND FRONT CRANKSHAFT SEAL REPLACEMENT

Remove or Disconnect (Figure 15)

Tool Required:

J 23523-E Torsional Damper Remover and Installer

1. Fan belts, fan, and pulley. Refer to ENGINE COOLING (SEC. 6B1).
2. Fan shroud assembly.
3. Accessory drive pulley damper.
4. Torsional damper bolt and washer.
5. Torsional damper. Use J 23523-E (figure 15).
6. Front crankshaft seal. Pry out with a large screwdriver. Take care not to distort the timing cover.
7. Crankshaft key, if necessary.

Inspect

- Oil seal contact area on the torsional damper shaft for grooving and roughness. Replace if necessary.

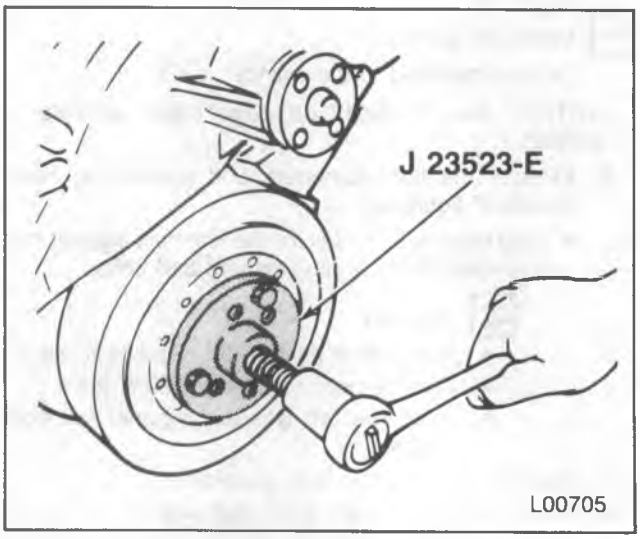

Figure 15—Removing the Torsional Damper

Install or Connect (Figures 16 and 17)

Tools Required:

J 35468 Front Cover Aligner and Oil Seal Installer

J 23523-E Torsional Damper Remover and Installer

1. Crankshaft key, if removed.
2. Front crankshaft seal. Use J 35468 (figure 16). The open end of the seal faces inside the engine. Coat the seal lips with the engine oil.

NOTICE: The inertia weight section of the torsional damper is assembled to the hub with a rubber type material. The correct installation procedures (with the proper tool) must be followed or movement of the inertia weight section of the hub will destroy the tuning of the torsional damper.

3. J 23523-E stud (item A, figure 17) to the crankshaft. Thread the stud fully into the tapped hole in the crankshaft.
4. Torsional damper over the end of the stud. Align the keyway in the torsional damper shaft with the crankshaft key.
5. J 23523-E bearing, washer and nut (figure 17).
   - Turn the nut to pull the vibration damper into place.
   - Remove the tool.

- Use a small amount of RTV sealant (GM part number 1052366 or equivalent) to seal the torsional damper key to the crankshaft joint.

NOTICE: See "Notice" on page 6A4-1 of this section.

6. Torsional damper bolt and washer.

Tighten

- Bolt to 95 N•m (70 ft. lbs.).

7. Accessory drive pulley damper.
8. Fan shroud assembly.
9. Fan pulley, fan, and fan belts. Refer to ENGINE COOLING (SEC. 6B1).

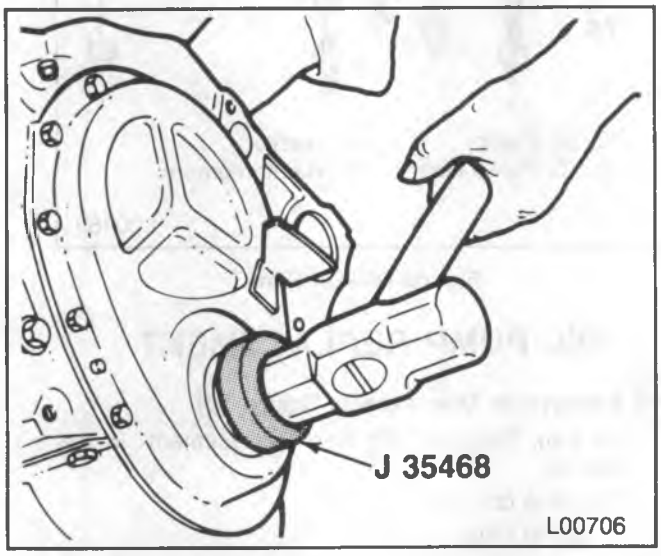

Figure 16—Installing the Front Crankshaft Oil Seal

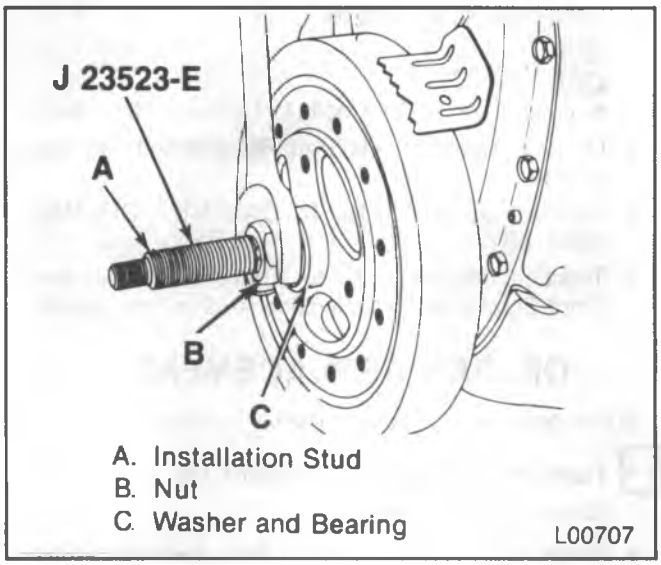

Figure 17—Installing the Torsional Damper

FRONT COVER REPLACEMENT

Remove or Disconnect

1. Torsional Damper. Refer to "Torsional Damper and Front Crankshaft Seal Replacement" in this section.
2. Coolant pump. Refer to ENGINE COOLING (SEC. 6B1).
3. Oil pan. Refer to "Oil Pan Replacement" in this section.
4. Front cover bolts.
5. Front cover.
6. Front cover to block gasket.
7. Front crankshaft seal from the front cover. Pry out with a screwdriver. Take care not to distort the front cover.

Clean

- Old gasket from the front cover and block.

Inspect

- Front cover for distortion and damage. Replace if necessary.

Install or Connect (Figure 16)

Tools Required:

J 35468 Front Cover Aligner and Oil Seal Installer

1. Front crankshaft seal. Use J 35468 (figure 16). The open end of the seal faces inside the engine. Coat the seal lips with engine oil.
2. Front cover gasket to the front cover. Use gasket cement to hold it in place.

NOTICE: See "Notice" on page 6A4-1 of this section.

3. Front cover to the engine.

Tighten

- Front cover to block bolts to 11 N•m (100 in. lbs.).

4. Oil pan. Refer to "Oil Pan Replacement" in this section.
5. Coolant pump. Refer to ENGINE COOLING (SEC. 6B1).
6. Torsional damper. Refer to "Torsional Damper and Front Crankshaft Seal Replacement" in this section.

OIL PAN REPLACEMENT

A one piece type of oil pan gasket is used.

Remove or Disconnect (Figure 18)

1. Battery negative cable.

- Raise the vehicle. Support with suitable safety stands.
- Drain the engine oil.

2. Exhaust crossover pipe (R models).
3. Flywheel/torque converter cover.
4. Starter.
5. Strut rods at the engine mountings (V-models with automatic transmissions).
6. Oil cooler lines from oil filter housing and from oil pan hold down clamps.
7. Automatic transmission cooler lines from oil pan hold down clamps.
8. Oil pan bolts, nuts, and reinforcements.
9. Oil pan and gasket.

Clean

- Gasket surfaces on the engine and oil pan.

Inspect

- Oil pan gasket for damage. Replace if necessary.

Install or Connect (Figure 18)

- Apply sealant (GM part number 1052080 or equivalent) to the front cover to block joint and to the rear crankshaft seal to block joint. Apply the sealant for about 25 mm (1 inch) in both directions from each of the four corners.

1. Oil pan gasket to the oil pan.
2. Oil pan to the engine.

NOTICE: See "Notice" on page 6A4-1 of this section.

3. Oil pan bolts, nuts and reinforcements.

Tighten

- Oil pan bolts to 11 N•m (100 in. lbs.).
- Oil pan nuts to 23 N•m (17 ft. lbs.).

4. Strut rods at the engine mountings (V-models with automatic transmissions).
5. Flywheel/torque converter cover.
6. Starter.
7. Exhaust crossover pipe.
8. Oil cooler lines from oil filter housing and from oil pan hold down clamps.
9. Automatic transmission cooler lines from oil pan hold down clamps.
10. Proper quantity and grade of engine oil. Refer to MAINTENANCE AND LUBRICATION (SEC. 0B).
11. Battery negative cable.

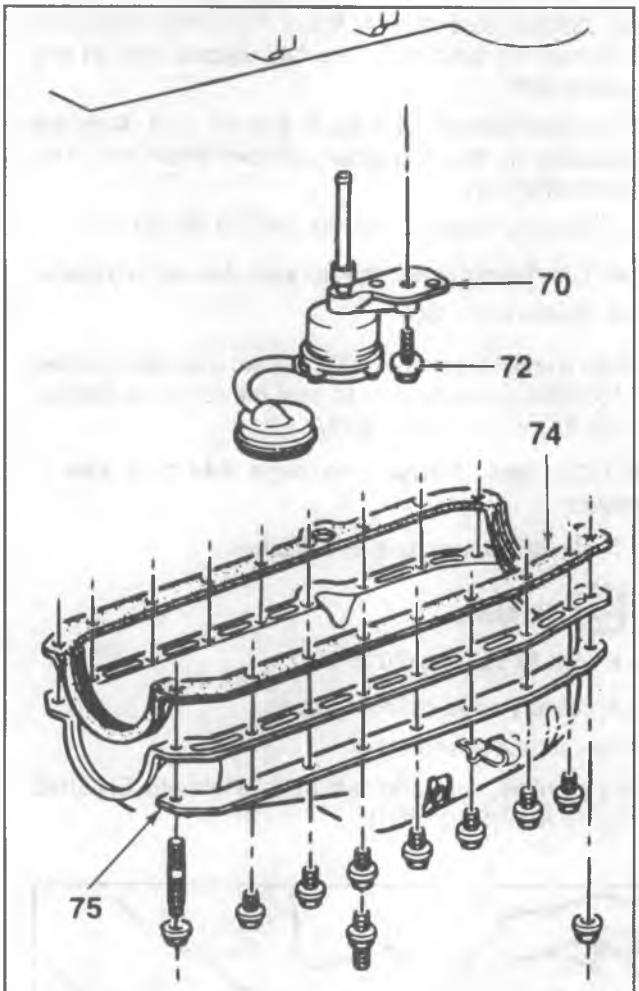

70. Oil Pump
72. Oil Pump Bolt
74. Gasket
75. Reinforcement

L00469

Figure 18—Oil Pan

OIL PUMP REPLACEMENT

Remove or Disconnect (Figure 18)

1. Oil pan. Refer to "Oil Pan Replacement" in this section.
2. Oil pump bolt (72).
3. Oil pump (70).

Inspect

- Oil pump pickup tube for looseness. If the tube is loose in the oil pump body, replace it, as outlined in the 1991 Light Duty Truck Unit Repair Manual. A loose pickup tube can result in an air leak and loss of oil pressure.

Oil Pump Repair

- Refer to the 1991 Light Duty Truck Unit Repair Manual.

Install or Connect (Figure 18)

1. Oil pump to the engine. Align the slot in the oil pump shaft with the tang on the distributor shaft. The oil pump should slide easily into place. No gasket is used.

NOTICE: See "Notice" on page 6A4-1 of this section.

2. Oil pump bolt (72).

Tighten

- Bolt (72) to 90 N•m (65 ft. lbs.).

3. Oil pan. Refer to "Oil Pan Replacement" in this section.

REAR CRANKSHAFT OIL SEAL REPLACEMENT

Remove or Disconnect (Figure 19)

1. Transmission. Refer to TRANSMISSION AND CLUTCH (SEC. 7).
2. Clutch and flywheel or flexplate, as equipped. Refer to TRANSMISSION AND CLUTCH (SEC. 7).

NOTICE: Take care not to nick the crankshaft sealing surface when removing the rear crankshaft oil seal.

3. Rear crankshaft oil seal. Insert a screwdriver into the notches provided in the seal retainer and pry the seal out (figure 19). Take care not to damage the crankshaft seal surface.

Inspect

- Chamfer on crankshaft for grit, loose rust, and burrs. Correct as necessary.

Clean

- Seal running surface on the crankshaft with a non-abrasive cleaner.

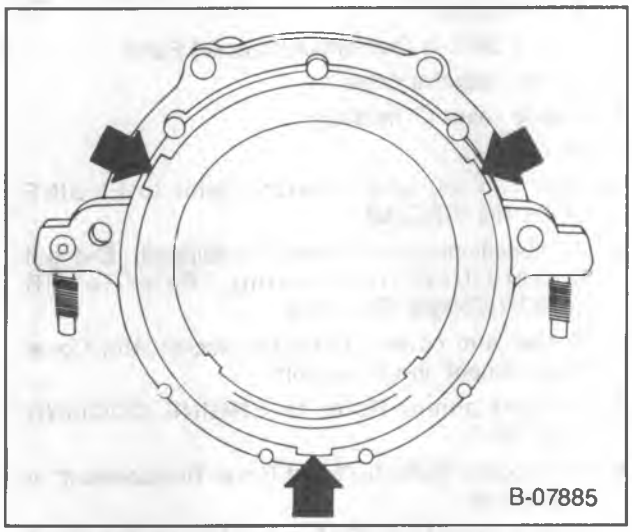

Figure 19—Seal Removal Notches

Install or Connect (Figure 21)

Tool Required:

J 35621 Rear Crankshaft Seal Installer

1. Rear crankshaft oil seal (figure 20)
   - Lubricate the inner and outer diameter of the seal with engine oil.
   - Install the seal on J 35621.
   - Position J 35621 against the crankshaft. Thread the attaching screws into the tapped holes in the crankshaft.
   - Tighten the screws securely with a screwdriver. This will ensure that the seal is installed squarely over the crankshaft.
   - Turn the handle until it bottoms.
   - Remove J 35621.
2. Clutch and flywheel or flexplate, as equipped. Refer to TRANSMISSION AND CLUTCH (SEC. 7).
3. Transmission. Refer to TRANSMISSION AND CLUTCH (SEC. 7).

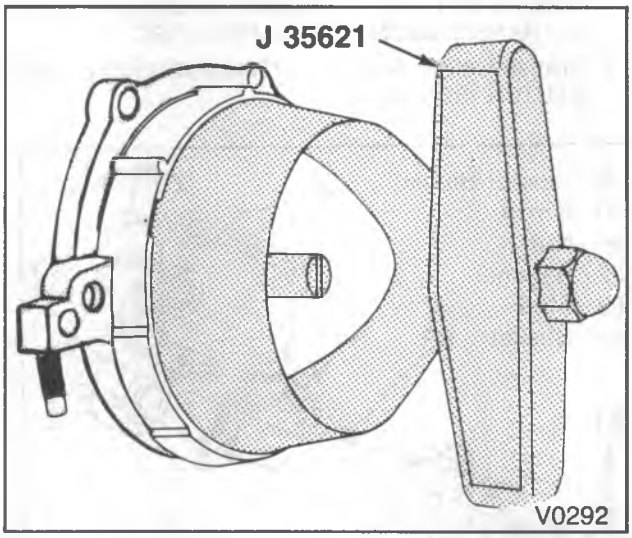

Figure 20—Installing the Rear Crankshaft Oil Seal

REAR CRANKSHAFT OIL SEAL RETAINER REPLACEMENT

Remove or Disconnect (Figures 19 and 21)

1. Transmission. Refer to TRANSMISSION AND CLUTCH (SEC. 7).
2. Clutch and flywheel or flexplate, as equipped. Refer to TRANSMISSION AND CLUTCH (SEC. 7).
3. Oil pan. Refer to "Oil Pan Replacement" in this section.
4. Screws (80) and nuts (81).
5. Seal retainer (82).
6. Gasket (84).
7. Rear crankshaft oil seal. Insert a screwdriver into the notches provided in the seal retainer and pry the seal out (figure 19).

Clean

- Gasket surfaces on block and seal retainer.

Install or Connect (Figure 21)

- Whenever the seal retainer is removed, a new retainer gasket and rear crankshaft oil seal must be installed.

1. Gasket (84) to the block. It is not necessary to use sealant to hold the gasket in place.
2. Seal retainer (82).

NOTICE: See "Notice" on page 6A4-1 of this section.

3. Screws (80) and nuts (81).

Tighten

- Screws (80) and nuts (81) to 15.3 N•m (135 in. lbs.).

4. Oil pan. Refer to "Oil Pan Replacement" in this section.
5. Rear crankshaft oil seal. Refer to "Rear Crankshaft Oil Seal" in this section.
6. Clutch and flywheel or flexplate, as equipped. Refer to TRANSMISSION AND CLUTCH (SEC. 7).
7. Transmission. Refer to TRANSMISSION AND CLUTCH (SEC. 7).

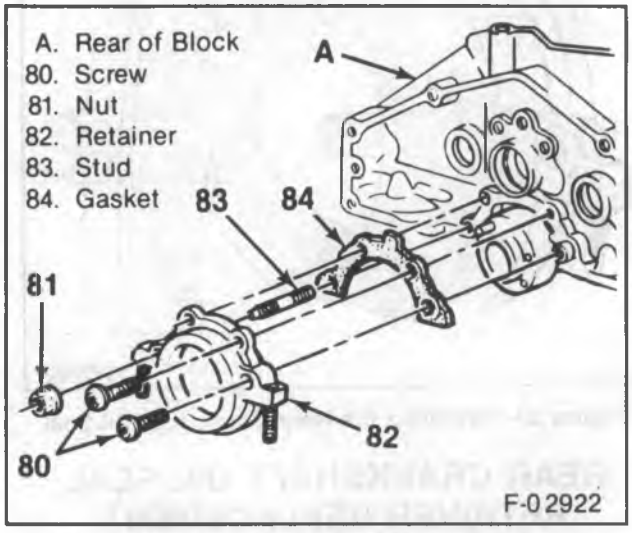

Figure 21—Rear Crankshaft Oil Seal Retainer

MEASURING CAMSHAFT LOBE LIFT

Tool Required:

J 8520 Cam Lobe Lift Indicator

1. Remove the rocker arm. Refer to "Rocker Arm and Pushrod Replacement" in this section.
2. Refer to figure 22. Position the dial indicator (part of J 8520) so the plunger rests on the pushrod end, as shown. Make sure the pushrod is in the lifter socket.
3. Rotate the crankshaft slowly in the direction of normal rotation until the lifter is on the heel of the cam lobe. At this point, the pushrod will be in its lowest position.
4. Set dial indicator on zero, then rotate the crankshaft slowly, or attach an auxiliary starter switch and "bump" the engine over, until the pushrod is in fully raised position.

Important

- Whenever the engine is cranked remotely at the starter with a special jumper cable or other means, the distributor primary lead or coil primary leads should be disconnected.

5. Compare the total lift recorded from the dial indicator, with "Specifications" at the end of this section.
6. If camshaft readings for all lobes are within specifications, remove dial indicator assembly.
7. Install the rocker arm and adjust the valves. Refer to "Valve Adjustment" in this section.

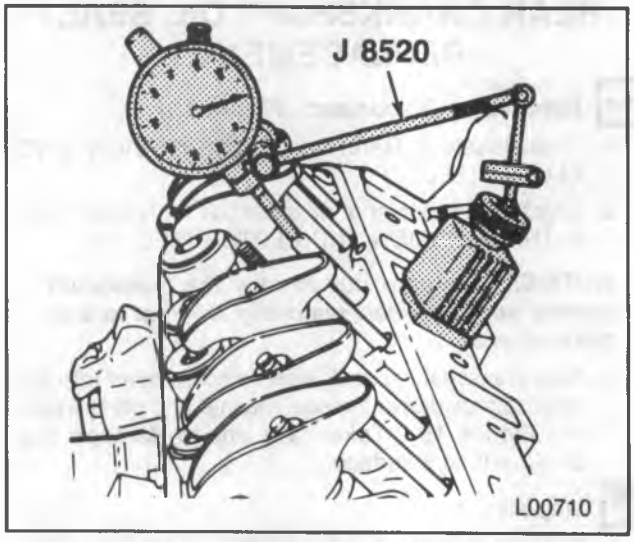

Figure 22—Measuring Camshaft Lobe Lift

CAMSHAFT REPLACEMENT

Remove or Disconnect (Figures 23, 24, and 25)

Tool Required:

J 5825-A Crankshaft Sprocket Puller

1. Battery negative cable.
2. Engine cover (P models).
3. Air cleaner.
4. Fan, shroud, and radiator. Refer to ENGINE COOLING (SEC. 6B1).
5. Air conditioning condenser (if equipped). Swing it forward from its mounting. Refer to AIR CONDITIONING (SEC. 1B).
6. Rocker arm covers. Refer to "Rocker Arm Cover Replacement" in this section.
7. Coolant pump. Refer to ENGINE COOLING (SEC. 6B1).
8. Front cover. Refer to "Front Cover Replacement" in this section.
9. Intake manifold. Refer to "Intake Manifold Replacement" in this section.

10. Pushrods. Refer to "Rocker Arm and Pushrod Replacement" in this section.
11. Hydraulic lifters. Refer to "Hydraulic Lifter Replacement" in this section.
12. Align the timing marks (Figure 23).
13. Camshaft sprocket bolts.
14. Camshaft sprocket and timing chain. The sprocket is a light interference fit on the camshaft. Tap the sprocket on its lower edge to loosen it.
15. Crankshaft sprocket (if required). Use J 5825-A (Figure 24).
16. Front engine mounting through-bolts.
    - On P models, it is not necessary to raise engine.

NOTICE: When raising or supporting the engine for any reason, do not use a jack under the oil pan, crankshaft pulley, or any sheet metal. Due to the small clearance between the oil pan and the oil pump screen, jacking against the oil pan may cause it to be bent against the pump screen, resulting in a damaged oil pickup unit.

    - Raise the engine.

16. Camshaft.
    - Install two or three 5/16-18 bolts 100-125 mm (4-5 inches) long into the camshaft threaded holes. Use these bolts to handle the camshaft (figure 25).
    - Pull the camshaft from the block. Use care to prevent damage to the camshaft bearings.

Cleaning, Inspection and Repair

Clean, inspect and repair or replace the camshaft and related components, as outlined in the 1991 Light Duty Truck Unit Repair Manual.

The unit repair manual also describes camshaft bearing replacement.

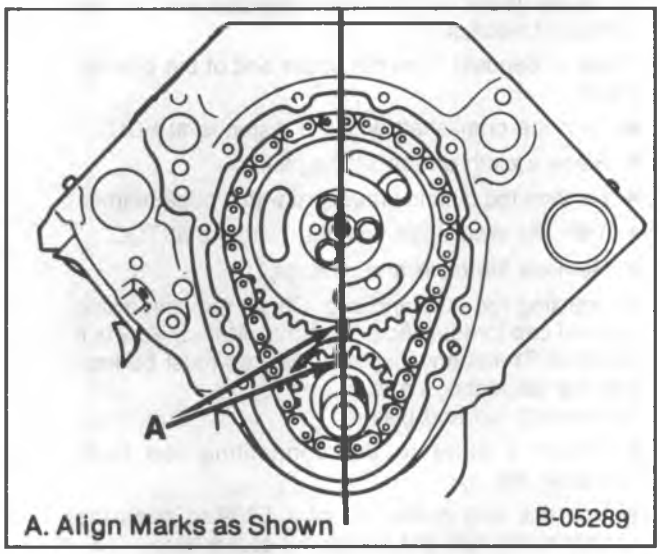

Figure 23—Timing Marks

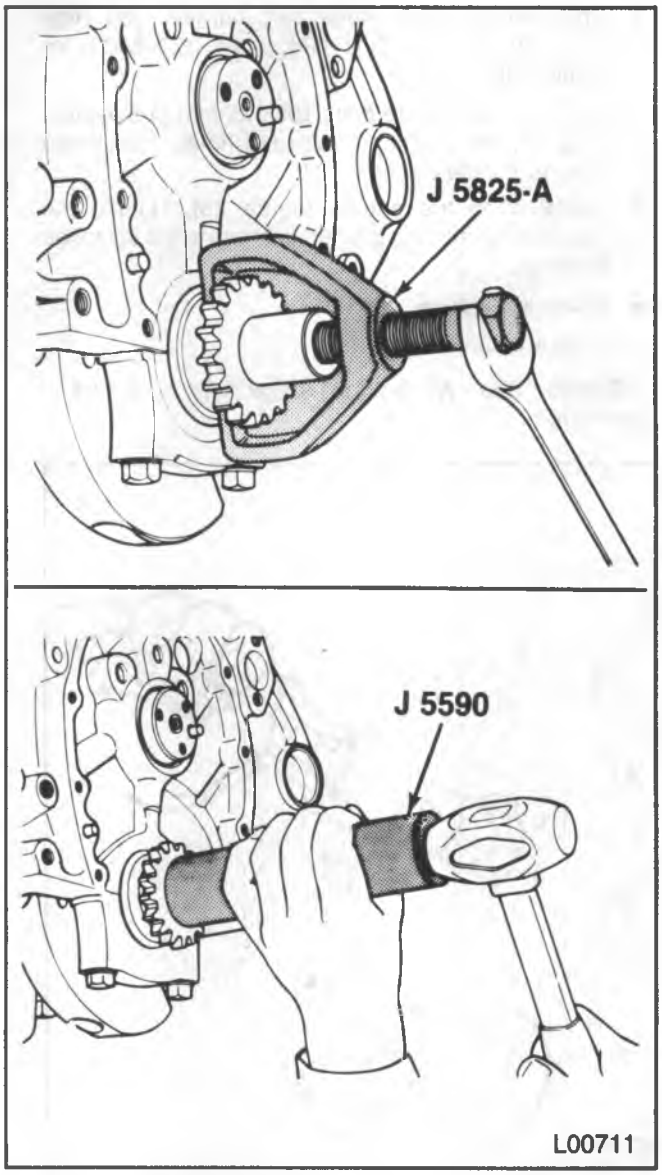

Figure 24—Replacing the Crankshaft Sprocket

Install or Connect (Figures 23 through 25 and 33 through 36)

Tool Required:

J 5590 Crankshaft Sprocket Installer

NOTICE: For steps 3 and 6 see "Notice" on page 6A4-1 of this section.

- Coat the camshaft lobes and journals with High Viscosity Oil with Zinc GM part# 12345501 (or equivalent).

1. Two or three 5/16-18 bolts 100-125 mm (4-5 inches) long into the camshaft threaded holes. Use these bolts to handle the camshaft.
2. Camshaft to the engine (figure 25). Handle the camshaft carefully to prevent damage to the camshaft bearings.

- Lower the engine.

3. Engine mount through-bolts.

NOTICE: See "Notice" on page 6A4-1 of this section.

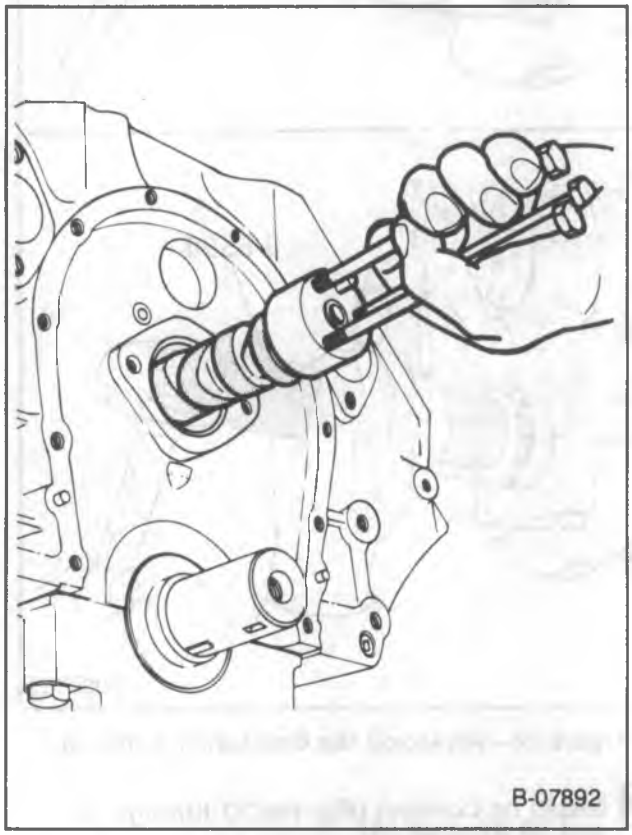

Figure 25—Replacing the Camshaft

Tighten

- Through bolts to specifications. Refer to figures 33 through 36.

4. Crankshaft sprocket (if removed). Use J 5590 (figure 24). Make sure the timing mark faces outside.
5. Camshaft sprocket and timing chain.

Important

- Line up the timing marks on the camshaft sprocket and crankshaft sprocket (figure 23).

6. Camshaft sprocket bolts.

Tighten

- Bolts to 28 N•m (21 ft. lbs.).

7. Hydraulic lifters. Refer to "Hydraulic Lifter Replacement" in this section.

Important

- Replace all hydraulic lifters, change the engine oil and filter, and add GM Engine Oil Supplement (or equivalent) to the engine oil whenever a new camshaft is installed.

8. Pushrods. Refer to "Rocker Arm and Pushrod Replacement" in this section.

Adjust

- Valves. Refer to "Valve Adjustment" in this section.

9. Intake manifold. Refer to "Intake Manifold Replacement" in this section.
10. Front cover. Refer to "Front Cover Replacement" in this section.
11. Coolant pump. Refer to ENGINE COOLING (SEC. 6B1).
12. Rocker arm covers. Refer to "Rocker Arm Cover Replacement" in this section.
13. Fan, shroud, and radiator. Refer to ENGINE COOLING (SEC. 6B1).
14. Air conditioning condenser (if equipped). Refer to AIR CONDITIONING (SEC. 1B).
15. Air cleaner.
16. Engine cover (P models).
17. Battery negative cable.

- Fill the cooling system with the proper quantity and grade of coolant. Refer to MAINTENANCE AND LUBRICATION (SEC. 0B).

CONNECTING ROD AND PISTON REPLACEMENT

Remove or Disconnect (Figure 26)

Tool Required:

J 5239 Connecting Rod Bolt Guide Set

1. Cylinder head. Refer to "Cylinder Head Replacement" in this section.
2. Oil pan. Refer to "Oil Pan Replacement" in this section.
3. Oil pump. Refer to "Oil Pump Replacement" in this section (if necessary).
4. Ridge or deposits from the upper end of the cylinder bores.
   - Turn the crankshaft until the piston is at BDC.
   - Place a cloth on top of the piston.
   - Perform the cutting procedure with a ridge reamer.
   - Turn the crankshaft until the piston is at TDC.
   - Remove the cloth and cuttings.
5. Connecting rod nuts and cap. Check the connecting rod and cap for identification marks. Mark the parts if required. The connecting rod and cap must be kept together as mating parts.
6. Connecting rod and piston.
   - Attach J 5239 to the connecting rod bolts (figure 26).
   - Use the long guide rod of J 5239 to push the connecting rod and piston out of the bore.
7. Connecting rod bearing.

Cleaning, Inspection, and Repair

Clean, inspect, and repair or replace the components as necessary. Measure connecting rod bearing clearance, piston clearance, ring clearances, etc. Refer to the 1991 Light Duty Truck Unit Repair Manual.

The unit repair manual contains information on:

- Connecting rods and pistons.
- Piston rings.
- Connecting rods and crankshaft.
- Cylinder bores.

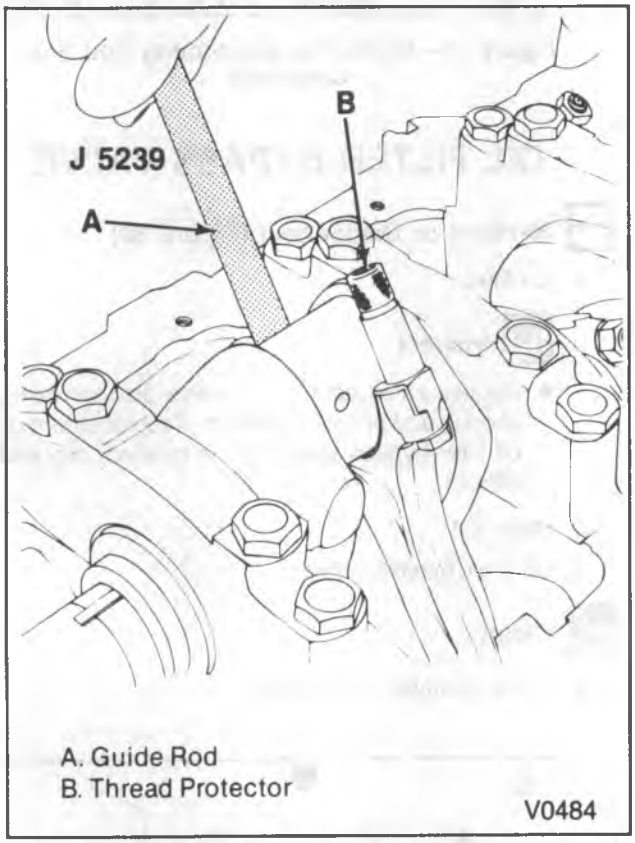

Figure 26—Replacing the Piston and Connecting Rod

Install or Connect (Figures 26 through 29)

Tools Required:

J 5239 Connecting Rod Guide Set

J 8037 Ring Compressor

- Make sure the cylinder walls are clean. Lubricate each cylinder wall lightly with engine oil.
- Make sure the piston is installed in the matching cylinder.

1. Connecting rod bearings.
   - Be certain that the bearings are of the proper size.
   - Install the bearings in the connecting rod and connecting rod cap.
   - Lubricate the bearings with engine oil.
2. Piston and connecting rod to the proper bore.
   - With the connecting rod cap removed, install J 5239 onto the connecting rod studs.
   - Locate the piston ring end gaps as shown in figure 27. Lubricate the piston and rings.
   - Without disturbing the ring end gap location, install J 8037 over the piston (figure 28).
   - The piston must be installed so that the notch in the piston faces the front of the engine (figure 27).
   - Place the piston in its matching bore. The connecting rod bearing tang slots must be on the side opposite the camshaft. Using light blows with a hammer handle, tap the piston down into its bore (figure 28). At the same time, from beneath the vehicle, guide the connecting rod to the crankshaft with J 5239 (figure 26). Hold the ring compressor against the block until all rings have entered the cylinder bore.
   - Remove J 5239 from the connecting rod bolts.

Important

- Each connecting rod and bearing cap should be marked, beginning at the front of the engine. Cylinders 1, 3, 5 and 7 are in the left bank and 2, 4, 6 and 8 are in the right bank. The numbers on the connecting rod and bearing cap must be on the same side when installed in the cylinder bore. If a connecting rod is ever transposed from one block or cylinder to another, new connecting rod bearings should be fitted and the connecting rod should be numbered to correspond with the new cylinder number.

Measure

- Connecting rod bearing clearance. Refer to the 1991 Light Duty Truck Unit Repair Manual.

3. Connecting rod cap and bearing.

NOTICE: See "Notice" on page 6A4-A of this section.

4. Connecting rod cap nuts.

Tighten

- Connecting rod cap nuts to 60 N•m (45 ft. lbs.).

Measure

- Connecting rod side clearance. Use a feeler gage between the connecting rods (figure 29). The correct clearance is 0.006-0.014-inch.

5. Oil pump (if removed). Remove to "Oil Pump Replacement" in this section.
6. Oil pan. Refer to "Oil Pan Replacement" in this section.
7. Cylinder head. Refer to "Cylinder Head Replacement" in this section.

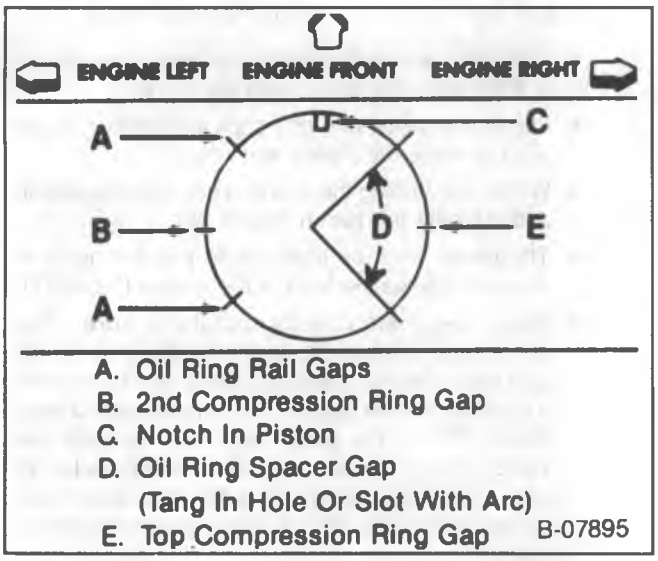

Figure 27—Piston Ring End Gap Locations

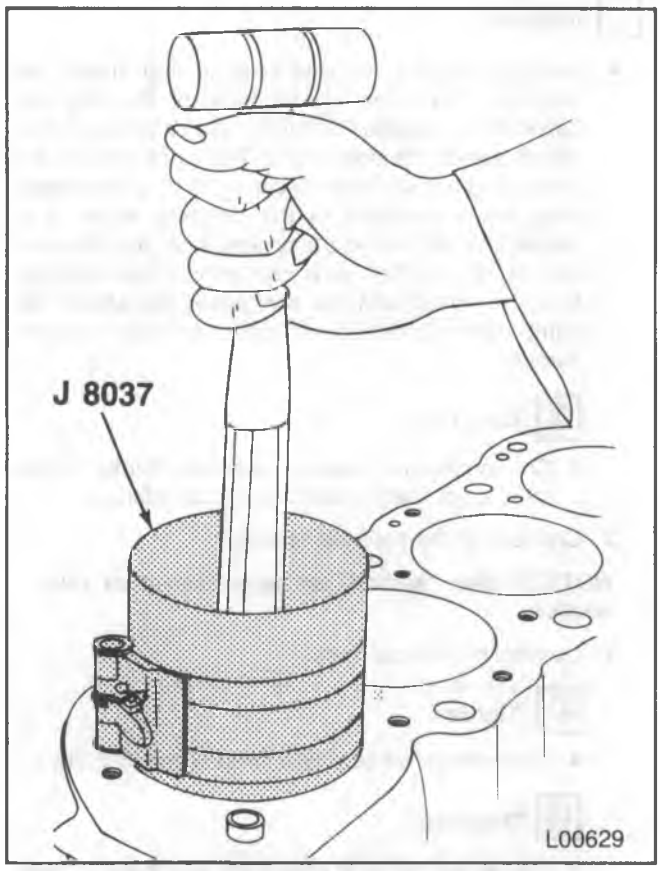

Figure 28—Installing the Piston

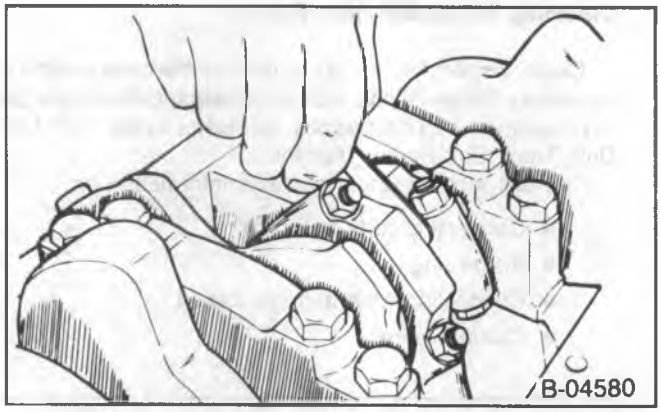

Figure 29—Measuring Connecting Rod Side Clearance

OIL FILTER BYPASS VALVE

Remove or Disconnect (Figure 30)

1. Oil filter.

Inspect

- Bypass valve spring and valve disc for damage, cracks, and proper operation. If replacement of the oil filter bypass valve (93) is needed, proceed as follows:

2. Bolts (94).
3. Oil filter bypass valve.

Clean

- Valve chamber in the block.

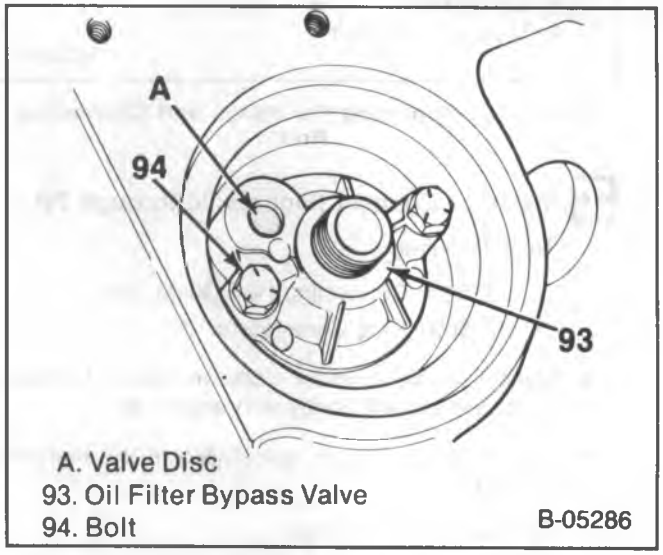

Figure 30—Oil Filter Bypass Valve

Install or Connect (Figure 30)

1. Oil filter bypass valve (93).

NOTICE: See "Notice" on page 6A4-1 of this section.

2. Bolts (94).

Tighten

- Bolts (94) to 26 N•m (20 ft. lbs.).

3. Oil filter.
4. Proper quantity and grade of engine oil. Refer to MAINTENANCE AND LUBRICATION (SEC. 0B).

MAIN BEARING REPLACEMENT

Remove or Disconnect (Figure 31)

Tool Required:

J 8080 Main Bearing Remover/Installer

1. Spark plugs.
2. Oil pan. Refer to "Oil Pan Replacement" in this section.
3. Oil pump. Refer to "Oil Pump Replacement" in this section.
4. Main bearing caps.
   - Check the main bearing caps for index markings. Mark the caps if necessary. The caps must be returned to their original locations during assembly.
5. The lower main bearing inserts from the main bearing caps.
6. The upper main bearing inserts.
   - Insert J 8080 into the crankshaft oil hole (figure 31).
   - Rotate the crankshaft to "turn" the bearing insert out of the block.

Cleaning, Inspection, and Repair

Clean, inspect, and repair or replace the components as required. Refer to the 1991 Light Duty Truck Unit Repair Manual. The unit repair manual contains information on:

- Crankshaft.
- Main and connecting rod bearings.

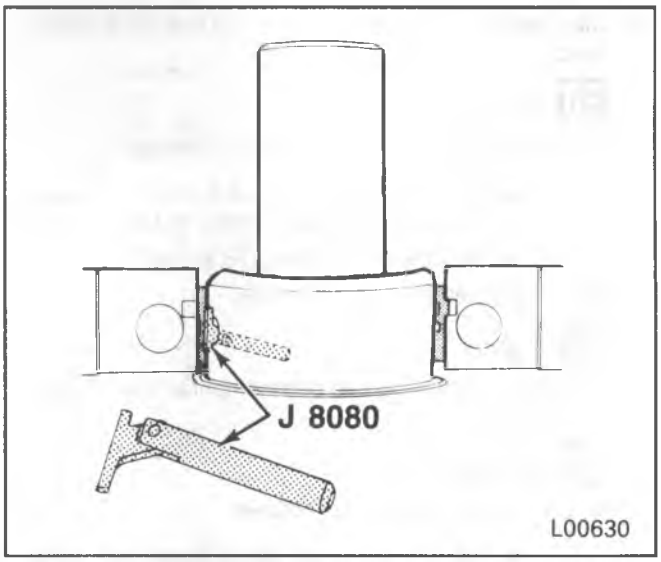

Figure 31—Removing the Main Bearing Insert

Install or Connect (Figures 31 and 32)

Tool Required:

J 8080 Main Bearing Remover/Installer

NOTICE: For steps 3 and 4 see "Notice" on page 6A4-1 of this section.

1. The upper main bearing inserts.
   - Insert tool J 8080 into a crankshaft main bearing oil hole (figure 31).
   - Apply engine oil to inserts of the proper size.
   - Insert the plain end (without the bearing tang) of the insert between the crankshaft and the notched side of the block.

- Rotate the crankshaft to "roll" the insert into the block.
   - Remove the tool.

2. The lower main bearing inserts to the main bearing caps.
   - Make sure the inserts are of the proper size.
   - Apply engine oil to the inserts.

Measure

- Main bearing clearance. Refer to the 1991 Light Duty Truck Unit Repair Manual.

Important

- If the engine is in the vehicle, the crankshaft must be supported upward to remove any clearance from the upper bearing. The total clearance can then be measured between the lower bearing and journal.

3. Main bearing caps (except rear cap) and bolts to the block.

Tighten

- Main bearing cap bolts to specifications.
  - Outer bolts on #2, #3, and #4 main bearing caps: 92 N•m (68 ft. lbs.).
  - All others: 106 N•m (78 ft. lbs.).

4. Rear main bearing cap and bolts.

Tighten

- Rear main bearing cap bolts temporarily to 14 N•m (10 ft. lbs.).

Measure

- Crankshaft endplay, as follows:
  - Tap the end of the crankshaft first rearward then forward with a lead hammer. This will line up the rear main bearing and crankshaft thrust surfaces.
  - Tighten the rear main bearing cap bolts to 106 N•m (78 ft. lbs.).
  - With the crankshaft forced forward, measure at the front end of the rear main bearing with a feeler gage (figure 32). The proper clearance is 0.002 to 0.006-inch.
  - If correct endplay cannot be obtained, be certain that the correct size rear main bearing has been installed. Production engines may have rear main bearings that are 0.008-inch wider across the thrust faces than standard. Refer to the 1991 Light Duty Truck Unit Repair Manual for more information.

8. Oil pump. Refer to "Oil Pump Replacement" in this section.
9. Oil pan. Refer to "Oil Pan Replacement" in this section.
10. Spark plugs.

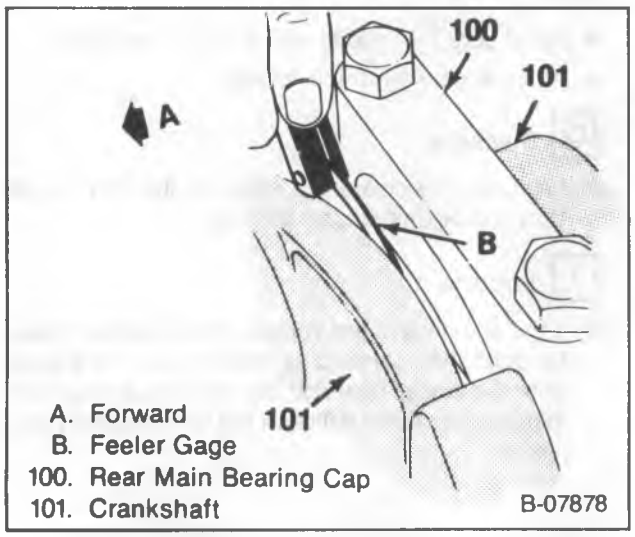

Figure 32—Measuring Crankshaft End Play

CRANKSHAFT REPLACEMENT

1. Remove the engine. Refer to "Engine Replacement" in this section.
2. Refer to the 1991 Light Duty Truck Unit Repair Manual for crankshaft replacement procedures.

FLYWHEEL REPLACEMENT (AUTOMATIC AND MANUAL TRANSMISSIONS)

Remove or Disconnect

1. Transmission, flywheel housing, and clutch (if used). Refer to TRANSMISSION AND CLUTCH (SEC. 7).
2. Flywheel bolts.
3. Flywheel.

Clean

- Mating surfaces of crankshaft and flywheel. Remove any burrs.

Inspect

- Flywheel for burning, scoring, warping, and wear. Replace the flywheel if necessary. Do not machine the flywheel.
- Flywheel ring gear for worn or broken teeth.

Flywheel Ring Gear Replacement

1. Use a torch to heat the gear around the entire circumference, then drive the gear off the flywheel, using care not to damage the flywheel.

NOTICE: Never heat starter gear to "red hot" as this will change the metallic structure.

2. Uniformly heat the flywheel gear to a temperature which will expand the gear to permit installation. Temperature must not exceed 204°C (400P°F).
3. As soon as the gear has been heated, install on the flywheel.

Install or Connect

1. Flywheel.

NOTICE: See "Notice" on page 6A4-1 of this section.

2. Flywheel bolts.

Tighten

- Flywheel bolts to 100 N•m (75 ft. lbs.).

3. Clutch (if used) flywheel housing, and transmission. Refer to TRANSMISSION AND CLUTCH (SEC. 7).

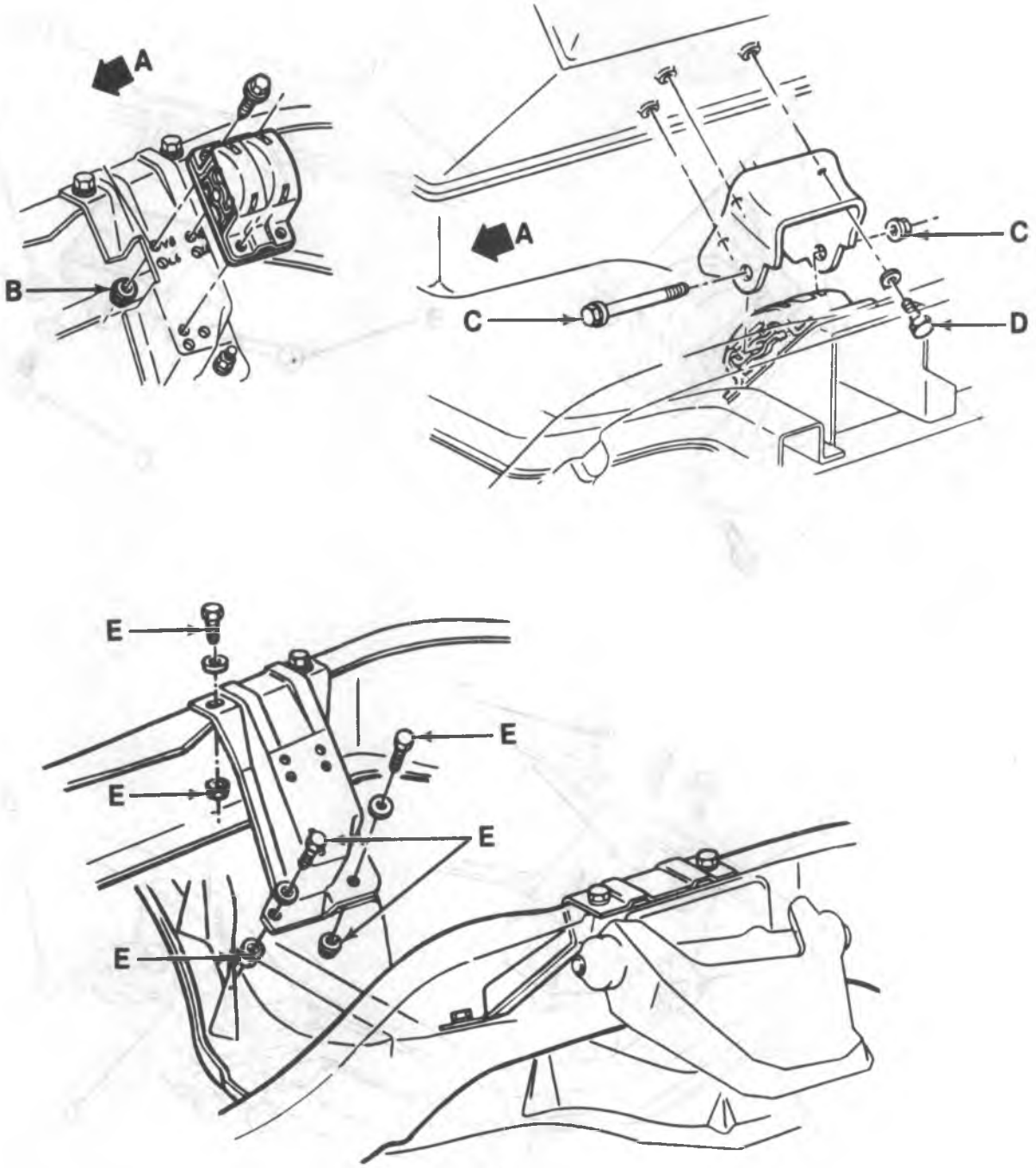

A. Forward
B. 40 N·m (30 Ft. Lbs.)
C. Torque Bolt To 115 N·m (85 Ft. Lbs.) Or, Torque Nut To 75 N·m (55 Ft. Lbs.)
D. 48 N·m (36 Ft. Lbs.)
E. Torque Bolt To 48 N·m (36 Ft. Lbs.) Or, Torque Nut To 40 N·m (30 Ft. Lbs.)

B-07621

Figure 33—Front Engine Mounting (R-Models)

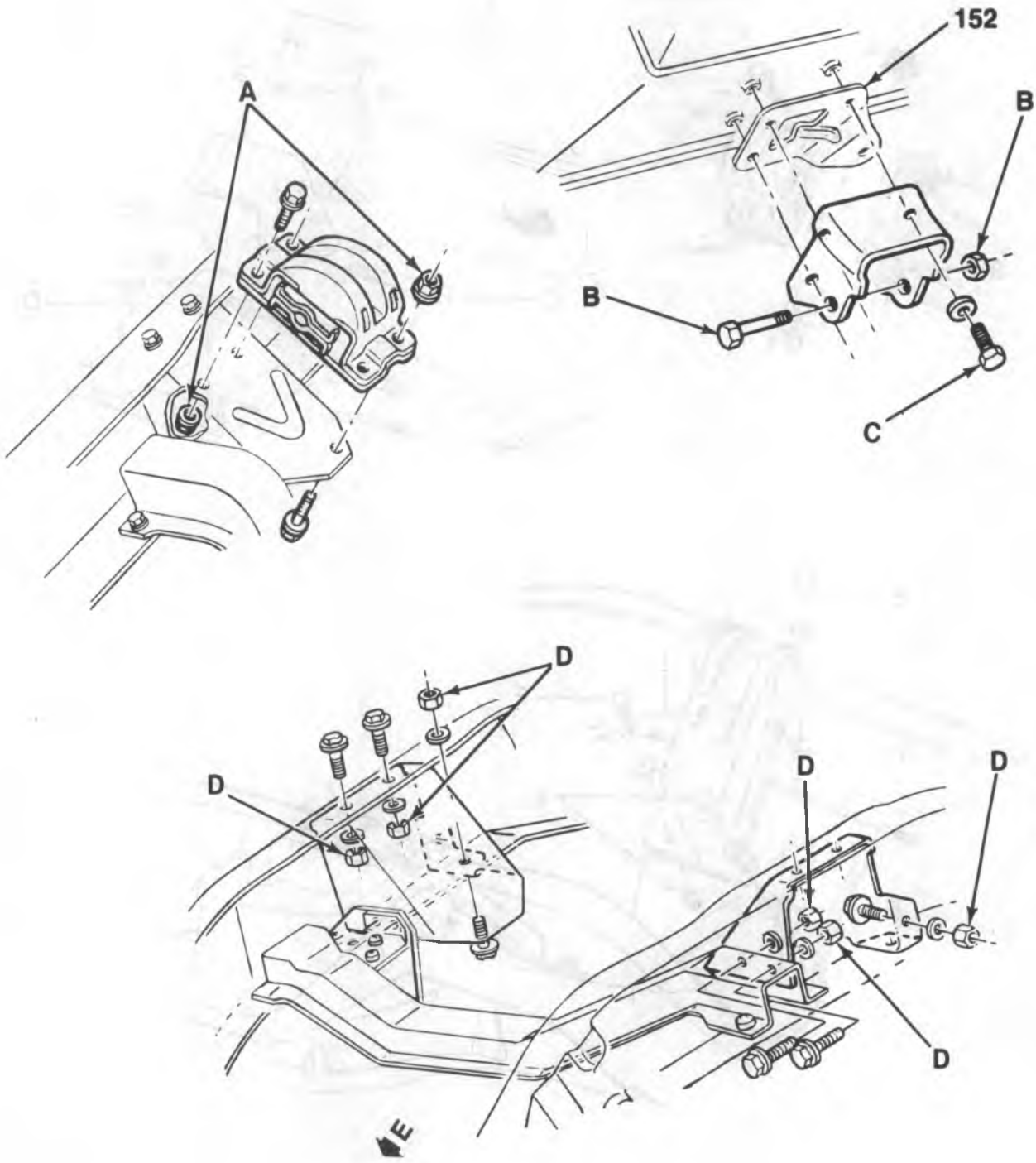

A. 40 N·m (30 Ft. Lbs.)
B. Torque Bolt To 115 N·m (85 Ft. Lbs.) Or,
Torque Nut To 75 N·m (55 Ft. Lbs.)
C. 48 N·m (36 Ft. Lbs.)
D. 65 N·m (48 Ft. Lbs.)
E. Forward
152. Transmission Strut Bracket (Automatic Transmission)
Or Spacer (Manual Transmission)

L00416

Figure 34—Front Engine Mounting (V Models)

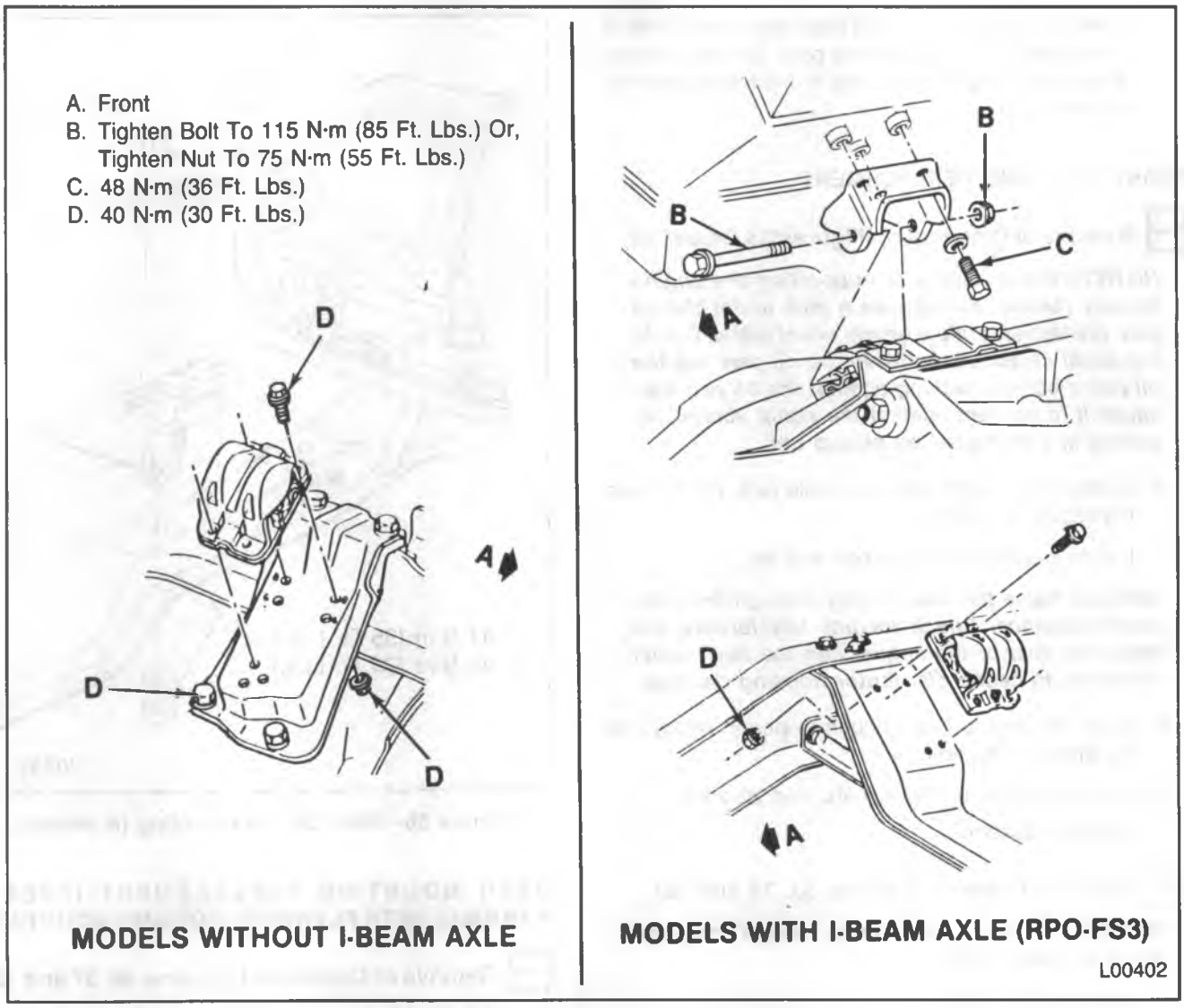

Figure 35—Front Engine Mounting (P Models)

ENGINE MOUNTINGS

NOTICE: Broken or deteriorated mountings can cause the misalignment and eventual destruction of certain drive train components. When a single mounting breakage occurs, the remaining mountings are subjected to abnormally high stresses.

INSPECTING ENGINE MOUNTINGS

Front Engine Mountings

NOTICE: When raising or supporting the engine for any reason, do not use a jack under the oil pan, crankshaft pulley, or any sheet metal. Due to the small clearance between the oil pan and the oil pump screen, jacking against the oil pan may cause it to be bent against the pump screen, resulting in a damaged oil pickup unit.

1. Raise the engine to remove weight from the mountings and to place a slight tension on the rubber cushion. Observe both mountings while raising the engine.
2. Replace the mounting if the following conditions exist:
   - Hard rubber surface covered with heat check cracks.
   - Rubber cushion separated from the metal plate of the mounting.
   - Rubber cushion split through the center.
3. If there is movement between a metal plate of the mounting and its attaching points, lower the engine and tighten the bolts or nuts attaching the mounting to the engine, frame, or bracket.

Rear Mountings

1. Push up and pull down on the transmission tailshaft. Observe the transmission mounting.
2. Replace the mounting if the following conditions exist:
   - Rubber cushion separated from the metal plate of the mounting.
   - Mounting bottomed out (tailshaft can be moved up but not down).

3. If there is relative movement between a metal plate of the mounting and its attaching point, tighten the bolts or nuts attaching the mounting to the transmission or crossmember.

FRONT MOUNTING REPLACEMENT

Remove or Disconnect (Figures 33, 34 and 35)

NOTICE: When raising or supporting the engine for any reason, do not use a jack under the oil pan, crankshaft pulley, or any sheet metal. Due to the small clearance between the oil pan and the oil pump screen, jacking against the oil pan may cause it to be bent against the pump screen, resulting in a damaged oil pickup unit.

- Support the engine with a suitable jack. Do not load the engine mounting.

1. Engine mounting through-bolt and nut.

NOTICE: Raise the engine only enough for sufficient clearance. Check for any interference between the rear of the engine and the dash panel which could cause distributor housing damage.

- Raise the engine only enough to permit removal of the engine mounting.

2. Mounting assembly bolts, nuts, and washers.
3. Mounting assembly.

Install or Connect (Figures 33, 34 and 35)

NOTICE: For steps 2 and 3 see "Notice" on page 6A4-1 of this section.

1. Mounting assembly.
2. Mounting assembly bolts, nuts, and washers.

Tighten

- Fasteners to specifications. Refer to figures 33, 34 and 35.

3. Engine mount through-bolt and nut. Lower the engine until the bolt can be inserted. Install the nut.

Tighten

- Through-bolt nut to specifications. Refer to figures 33, 34 and 35.

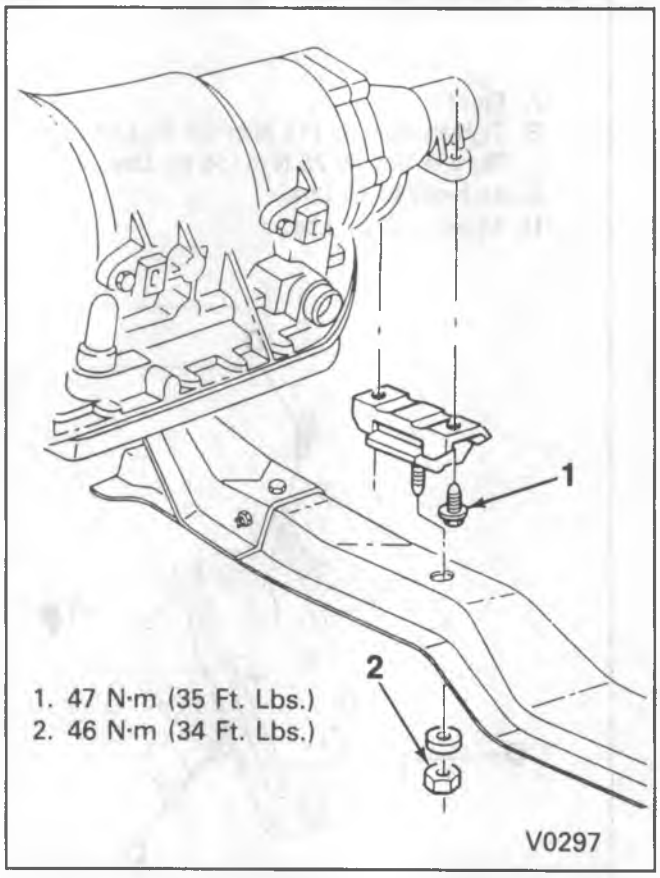

Figure 36—Rear Engine Mounting (R Models)

REAR MOUNTING REPLACEMENT (EXCEPT P MODELS WITH FLYWHEEL HOUSING MOUNTING)

Remove or Disconnect (Figures 36, 37 and 38)

NOTICE: When raising or supporting the engine for any reason, do not use a jack under the oil pan, crankshaft pulley, or any sheet metal. Due to the small clearance between the oil pan and the oil pump screen, jacking against the oil pan may cause it to be bent against the pump screen, resulting in a damaged oil pickup unit.

- Support the rear of the engine to relieve the weight on the rear mountings.

1. Mounting to crossmember nut(s) and washer(s).
2. Mounting to transmission bolts and washers.
   - Raise the rear of the engine only enough to permit removal of the mounting.
3. Mounting.

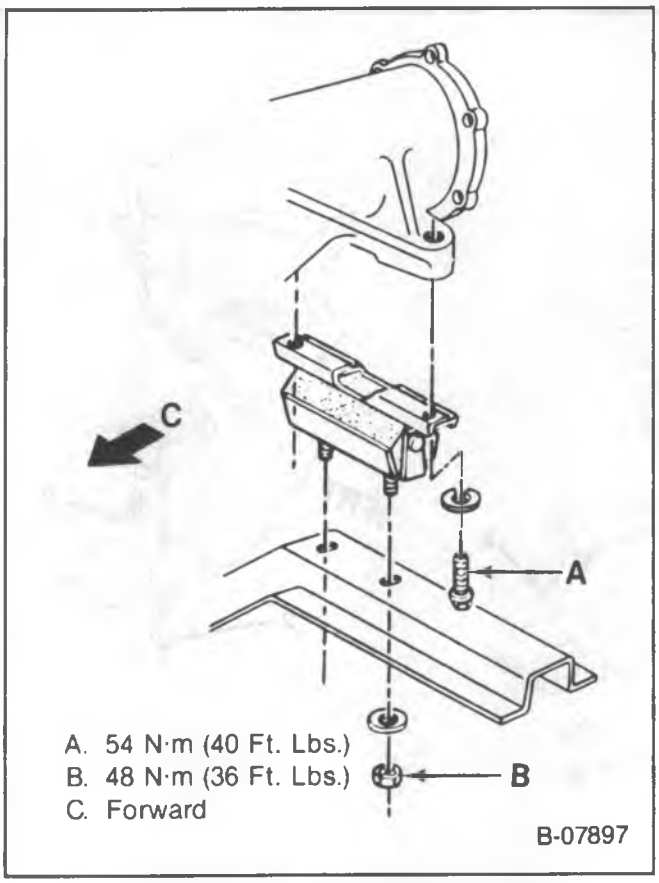

Figure 37—Rear Engine Mounting (V Models)

Install or Connect (Figures 36, 37 and 38)

1. Mounting.

- Lower the rear of the engine.

2. Mounting to transmission bolts and washers.

NOTICE: See "Notice" on page 6A4-1 of this section.

3. Mounting to crossmember nut(s) and washer(s).

Tighten

- Fasteners to specifications. Refer to figures 36, 37 and 38.

REAR MOUNTING REPLACEMENT (P MODELS WITH FLYWHEEL HOUSING MOUNTING)

Remove or Disconnect (Figure 39)

1. Bolt, cushion and spacer.

NOTICE: When raising or supporting the engine for any reason, do not use a jack under the oil pan, crankshaft pulley, or any sheet metal. Due to the small clearance between the oil pan and the oil pump screen, jacking against the oil pan may cause it to be bent against the pump screen, resulting in a damaged oil pickup unit.

2. Engine mounting.

- Raise the rear of the engine only enough to permit removal of the mounting.

Install or Connect (Figure 39)

1. Engine mounting. Align the hole in the mounting with the hole in the crossmember.

- Lower the engine.

ENGINE: See "Notice" on page 6A4-1 of this section.

2. Spacer, cushion, and bolt.

Tighten

- Bolt to 90 N•m (65 ft. lbs.).

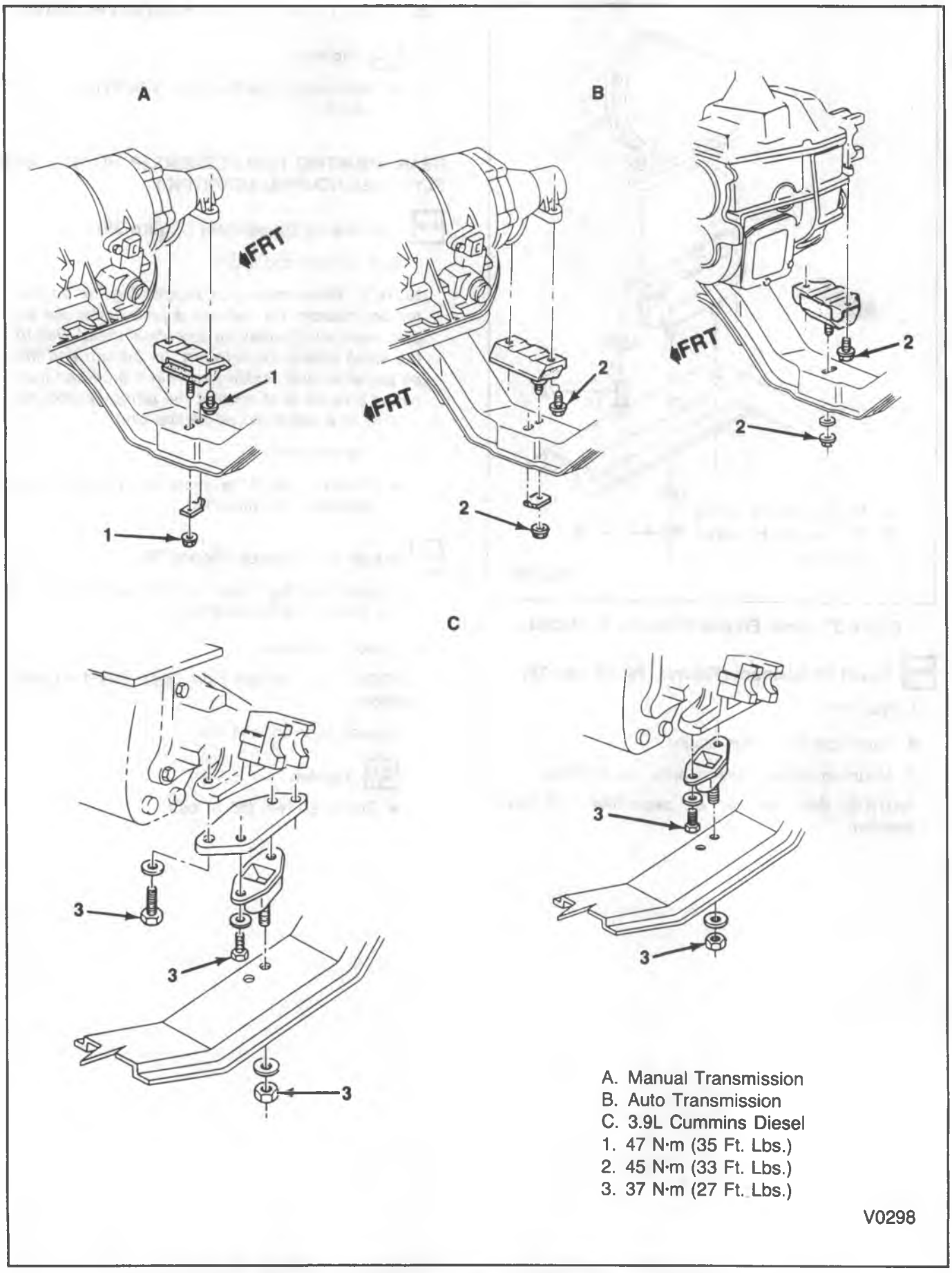

Figure 38—Rear Engine Mounting (P Models with Transmission Tail Type Mounting)

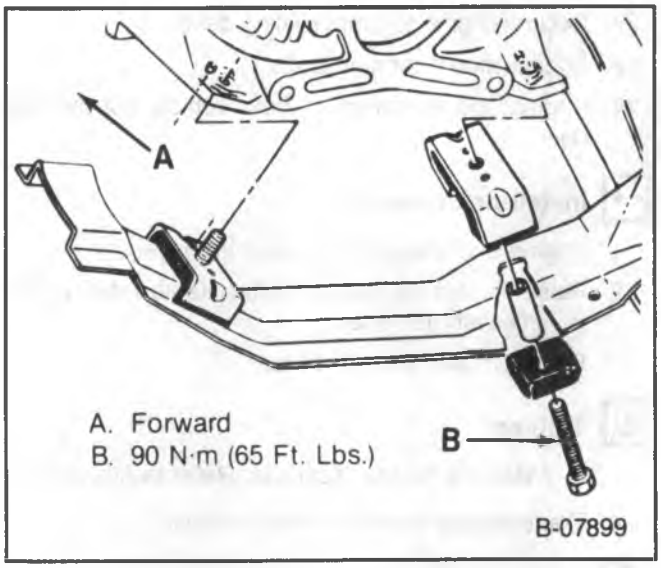

Figure 39—Rear Engine Mounting (P Models with Flywheel Housing Type Mounting)

ENGINE REPLACEMENT

R/V MODELS

Remove or Disconnect

1. Battery negative cable.
2. Hood.
- Drain the cooling system.
3. Air cleaner.
4. Drive belts.
5. Radiator and shroud. Refer to RADIATOR (SEC. 6B2).
6. Fan and coolant pump pulley.
7. Heater hoses at the engine.
8. Accelerator, cruise control, and detent linkage from TBI.
9. Air conditioning compressor (if equipped); lay aside. Refer to AIR CONDITIONING (SEC. 1B).
10. Power steering pump (if equipped); lay aside. Refer to POWER STEERING (SEC. 3B3).
11. Engine wiring harness from the engine.
12. Fuel lines from TBI.
13. Vacuum lines from the intake manifold.
- Raise the vehicle. Support with suitable safety stands.
- Drain the crankcase oil.
14. Exhaust pipes from the manifolds. Refer to EXHAUST (SEC. 6F).
15. Strut rods at the engine mountings (V-models with automatic transmission).
16. Flywheel or torque converter underpan.
17. Wiring from A/C mount bracket.
18. Starter. Refer to CRANKING SYSTEMS (SEC. 6D2).
19. Wiring for knock sensor.
20. Converter to flex plate bolts.
21. Oil cooler lines at oil filter housing and oil pan clamps (12).
22. Automatic transmission cooler lines at oil pan clamps.
23. Engine mount through bolts. Refer to Engine Mounting this section.
24. Bell housing to engine bolts and automatic transmission dipstick tube retaining bolt at cylinder head.
- Lower the vehicle.
- Support the transmission.
- Attach a suitable lifting fixture.
25. Engine.

Install or Connect (Figures 33 and 34)

NOTICE: For steps 2 and 3 see "Notice" on page 6A4-1 of this section.

1. Engine to the vehicle. Align to clutch housing.
- Raise the vehicle. Support with suitable safety stands.
2. Front engine mounting through bolts.
   - Remove transmission support jack.

   Tighten
   - Fasteners to specifications. Refer to figures 33 and 34.
3. Clutch housing to engine bolts.

   Tighten
   - Bolts to 44 N•m (32 ft. lbs.).
4. Converter to flex plate bolts.
5. Wire to knock sensor.
6. Starter. Refer to ENGINE ELECTRICAL (SEC. 6D).
7. Wiring to A/C bracket.
8. Flywheel or torque converter underpan.
9. Strut rods at the engine mountings (V-models with automatic transmission).
10. Exhaust pipes to the manifolds. Refer to EXHAUST (SEC. 6F).
11. Oil cooler lines at oil filter housing and oil pan clamps (12).
12. Automatic transmission cooler lines at oil pan clamps.
13. Engine mount through bolts. Refer to ENGINE MOUNTING this section.
14. Clutch housing to engine bolts and automatic transmission dipstick tube retaining bolt at cylinder head.
- Lower the vehicle.
15. Vacuum lines to the intake manifold.
16. Fuel line to TBI.
17. Engine wiring harness.
18. Power steering pump. Refer to POWER STEERING (SEC. 3B3).
19. Air conditioning compressor (if equipped). Refer to AIR CONDITIONING (SEC. 1B).
20. Accelerator, cruise control, and detent linkages, and equipped.

21. Heater hoses.
22. Fan and coolant pump pulley.
23. Radiator and shroud. Refer to RADIATOR (SEC. 6B2).
24. Accessory drive belts.
25. Air cleaner.
26. Hood.
27. Proper quantity and grade of coolant and crankcase oil. Refer to MAINTENANCE AND LUBRICATION (SEC.0B).
28. Battery negative cable.

P MODELS

Remove or Disconnect

1. Negative battery cable.
2. Drain coolant. Refer to RADIATOR (SEC. 6B2).
3. Engine cover.
4. Floor panel from transmission, bellhousing section and section from left side by accelerator pedal.
5. Air cleaner and duct.
6. Exhaust heat stove pipe.
7. Distributor cap lay aside.
8. Electrical connections from engine assembly.
   - Clamps holding wiring harness to engine assembly.
   - Electrical connections from starter.
   - Lay wiring harness aside.
9. Fuel lines from TBI and clamps from bellhousing and transmission.
   - Lay fuel lines aside.
10. Clutch hydraulic line from slave cylinder and clamps from bellhousing lay line aside.
11. Ground strap at rear of left cylinder head.
12. Electrical connections at transmission and clamps lay wiring aside.
13. Transmission shifter stick (if necessary).
14. Upper radiator hose from engine and radiator.
15. All drive belts or serpentine belt.
16. Fan and pulley from coolant pump.
17. Fan shroud.
18. Lower radiator hose from coolant pump.
19. Oil fill tube from intake manifold and valve cover.
20. Raise the vehicle. Support with suitable safety stands. (If it is necessary to raise vehicle).
21. Exhaust pipe from exhaust manifolds.
22. Battery cable from engine block clamp.
23. Prop shaft U joint from transmission yoke.
24. Parking brake cable from transmission mounting bracket.
    - Separate cable from cable connected to brake drum assembly
25. Transmission mount from frame crossmember.
26. Oil cooler lines from oil filter adapter and engine clamps.
    - Lower vehicle (if raised).
27. Secure engine to proper lifting device.
28. Engine mount through bolts.
29. Engine and transmission from vehicle out the side door.

Install or Connect

1. Engine and transmission align in place.
2. Raise the vehicle. Support with suitable safety stands (if necessary to raise).
3. Engine mount through bolts.

Tighten

- Fasteners to specifications. Refer to figure 35.

4. Transmission mount to crossmember.

Tighten

- Fastener to specifications. Refer to figure 38.

5. Prop shaft to transmission yoke.
6. Oil cooler lines to engine.
7. Exhaust pipe to manifolds.
8. Park brake cable and adjust.
9. Battery cable to engine block clamp.
10. Clutch line to slave cylinder.
    - Lower vehicle (if raised).
11. Oil fill tube.
12. Lower radiator hose.
13. Fan shroud. Fan and pulley. Refer to ENGINE COOLING (SECTION 6B1).
14. Belts or serpentine belt. Refer to ENGINE COOLING (SECTION 6B1).
15. Upper radiator hose.
16. Electrical connections and clamps to transmission.
17. Ground strap to cylinder head.
18. Clutch lines to bellhousing clamps.
19. Fuel lines to TBI and clamps. Refer to FUEL AND EMISSIONS SERVICE MANUAL if using X-9132, or to the rear of this manual if using ST330-91.
20. Electrical connections to starter.
21. Electrical connections to engine assembly.
22. Distributor cap.
23. Air cleaner assembly and stove heatpipe.
24. Floor panel sections.
25. Proper quantity of grade of coolant and crankcase oil. Refer to MAINTENANCE AND LUBRICATION (SECTION 0B).
26. Negative battery cable.
27. Engine cover.

SPECIFICATIONS

GENERAL DATA:					
Type				V8	
Displacement				5.0L (305 Cu. In.)	5.7L (350 Cu. In.)
RPO (VIN Code)				L03 (H)	L05 (K)
Bore				3.736	4.00
Stroke				3.480	
Compression Ratio				9.3:1	*
Firing Order				1 - 8 - 4 - 3 - 6 - 5 - 7 - 2	
Oil Pressure (Minimum)				6 PSI @ 1000 RPM; 18 PSI min @ 2000 RPM; 24 PSI min. @ 4000 RPM	
CYLINDER BORE:					
Diameter				3.7350-3.7385	3.9995-4.0025
Out Of Round	Production			0.001 (Maximum)	
	Service			0.002 (Maximum)	
Taper	Production	Thrust Side		0.0005 (Maximum)	
		Relief Side		0.001 (Maximum)	
	Service			0.001 (Maximum)	
PISTON:					
Clearance	Production			0.0007-0.0017	
	Service Limit			0.0027 (Maximum)	
PISTON RING:					
COMPRESSION	Groove Clearance	Production	Top	0.0012-0.0032	
			2nd		
		Service Limit		Hi Limit Production + 0.001	
	Gap	Production	Top	0.010-0.020	
			2nd	0.010-0.025	
		Service Limit		Hi Limit Production + 0.010	
OIL	Groove Clearance	Production		0.002-0.007	
		Service Limit		Hi Limit Production + 0.001	
	Gap	Production		0.015-0.055	
		Service Limit		Hi Production + 0.010	
PISTON PIN:					
Diameter				0.9269-0.9271	
Clearance In Piston		Production		0.0002-0.0007	
		Service Limit		0.001 (Maximum)	
Fit In Rod				0.0008-0.0016 Interference	

*8.3:1 (Over 8500-lb. GVW)
9.1:1 (Under 8500-lb. GVW)

SPECIFICATIONS (CONT.)

DISPLACEMENT			5.0L (305 Cu. In.)	5.7L (350 Cu. In.)
CRANKSHAFT:				
Main Journal	Diameter	#1	2.4484-2.4493	
		#2, #3, #4	2.4481-2.4490	
		#5	2.4479-2.4488	
	Taper	Production	0.0002 (Maximum)	
		Service Limit	0.001 (Maximum)	
	Out of Round	Production	0.0002 (Maximum)	
		Service Limit	0.001 (Maximum)	
Main Bearing Clearance	Production	#1	0.0008-0.0020	
		#2, #3, #4	0.0011-0.0023	
		#5	0.0017-0.0032	
	Service Limit	#1	0.0010-0.0015	
		#2, #3, #4	0.0010-0.0025	
		#5	0.0025-0.0035	
Crankshaft End Play			0.002-0.006	
Crankpin	Diameter		2.0988-2.0998	
	Taper	Production	0.0005 (Maximum)	
		Service Limit	0.001 (Maximum)	
	Out Round	Production	0.0005 (Maximum)	
		Service Limit	0.001 (Maximum)	
Rod Bearing Clearance	Production		0.0013-0.0035	
	Service Limit		0.003 (Maximum)	
Rod Side Clearance			0.006-0.014	
CAMSHAFT:				
Lobe Lift ± 0.002	Intake		0.2336	0.2565
	Exhaust		0.2565	0.2690
Journal Diameter			1.8682-1.8692	
Camshaft End Play			0.004-0.012	
VALVE SYSTEM:				
Lifter			Hydraulic	
Rocker Arm Ratio			1.50:1	
Valve Lash		Intake	One Turn Down From Zero Lash	
		Exhaust		
Face Angle (Intake & Exhaust)			45°	
Seat Angle (Intake & Exhaust)			46°	
Seat Runout (Intake & Exhaust)			0.002 (Maximum)	
Seat Width		Intake	1/32-1/16	
		Exhaust	1/16-3/32	
Stem Clearance	Production	Intake	0.0010-0.0027	
		Exhaust	0.0010-0.0027	
	Service	Intake	High Limit Production +0.001	
		Exhaust	High Limit Production +0.002	
Valve Spring (Outer)	Free Length		2.03	
	Pressure Lbs. @ in.	Closed	76-84 lbs. @ 1.70"	
		Open	194-206 lbs. @ 1.25"	
	Installed Height ± 1/32"		1 23/32	
Valve Spring Damper	Free Length		1.86	
	Approx. # of Coils		4	

GMTB-0896-2L

SPECIFICATIONS (CONT.)

FASTENER TORQUE

Item	N•m	Ft. Lbs.	In. Lbs.
Rocker Arm Cover Bolts	11	—	95
Intake Manifold Bolts	48	35	—
Exhaust Manifold Bolts			
Cast Manifolds:			
Two Center Bolts:	36	26	—
All Others:	28	20	—
Cylinder Head Bolts	92	68	—
Torsional Damper Bolt	95	70	—
Front Cover Bolts	11	—	100
Oil Pan Nuts at Corners	23	—	200
Oil Pan Bolts	11	—	100
Oil Pump Bolt	90	65	—
Oil Pan Baffle Nuts (Some 5.7L Engines)	34	25	—
Rear Crankshaft Oil Seal Retainer Screws and Nuts	15	—	135
Camshaft Sprocket Bolts	28	21	—
Connecting Rod Cap Nuts	60	45	—
Oil Filter Bypass Valve Bolts	25	18	—
Main Bearing Cap Bolts			
Outer Bolts on #2, #3, and #4 Caps	92	68	—
All Others	106	78	—
Oil Pump Cover Bolts	11	—	97
Flywheel Bolts	100	74	—
Spark Plugs	30	22	—
Coolant Outlet Bolts	28	21	—
Coolant Pump Bolts	40	30	—
Bell Housing Bolts	45	33	—
Oil Pan Studs to Back or Rear Oil Seal Retainer	2	—	15
Oil Pan Drain Plug	22	16	—
Block Drain Plug	22	16	—

GMTB-3130-2A

SPECIAL TOOLS

1. 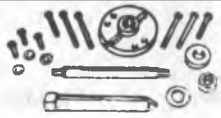 J 23523-E

2. J 5892-C

3. J 23590

4. J 35468

5. J 8080

6. J 8037

7. J 5239

8. J 23738-A

9. J 3049-A

10. J 5802-01

11. J 5715

12. J 6036

13. J 6880

14. J 5825-A

15. J 5590

16. J 8520

17. J 35621

1. Torsional Damper Remover and Installer
2. Valve Spring Compressor
3. Air Adapter
4. Crankshaft Seal Installer and Centering Tool
5. Main Bearing Replacer
6. Piston Ring Compressor
7. Guide Set
8. Vacuum Pump
9. Hydraulic Lifter Remover (Plier Type)
10. Stud Remover
11. Reamer (0.003-inch oversize)
12. Reamer (0.013-inch oversize)
13. Stud Installer
14. Crankshaft Gear Puller
15. Crankshaft Gear Installer
16. Dial Indicator Adapter
17. Rear Crankshaft Seal Installer

V0296

SECTION 6A5

7.4 LITER V8

NOTICE: When fasteners are removed, always reinstall them at the same location from which they were removed. If a fastener needs to be replaced, use the correct part number for that application. If the correct part number fastener is not available, a fastener of equal size and strength (or stronger) may be used. Fasteners that are not reused and those requiring thread locking compound will be called out. The correct torque value must be used when installing fasteners that require it. If the above conditions are not followed, parts or system damage could result.

CONTENTS

SUBJECT	PAGE
Description	6A5- 1
Engine Lubrication	6A5- 2
On-Vehicle Service	6A5- 3
Rocker Arm Cover Replacement	6A5- 3
Rocker Arm and Pushrod Replacement	6A5- 3
Valve Stem Seal and Valve Spring Replacement	6A5- 4
Intake Manifold Replacement	6A5- 5
Hydraulic Lifter Replacement	6A5- 6
Exhaust Manifold Replacement	6A5- 7
Cylinder Head Replacement	6A5- 7
Torsional Damper and Front Crankshaft Seal Replacement	6A5- 8
Front Cover Replacement	6A5- 9
Oil Pan Replacement	6A5-10
Oil Pump Replacement	6A5-11
Rear Crankshaft Oil Seal Replacement	6A5-12
Measuring Camshaft Lobe Lift	6A5-12
Camshaft Replacement	6A5-13
Connecting Rod and Piston Replacement	6A5-15
Main Bearing Replacement	6A5-17
Crankshaft Replacement	6A5-18
Flywheel Replacement (Automatic and Manual Transmission)	6A5-18
Engine Mountings	6A5-19
Engine Replacement	6A5-25
Specifications	6A5-26
Special Tools	6A5-29

DESCRIPTION

7.4L engines are 90-degree V8 type, overhead valve, liquid cooled, with cast iron block and heads.

The crankshaft is supported by five precision insert main bearings, with crankshaft thrust taken at the number five (rear) bearing.

The camshaft is supported by five plain type bearings and is chain driven. Motion from the camshaft is transmitted to the valves by hydraulic lifters, pushrods, and ball type rocker arms. The valve guides are integral in the cylinder head.

The connecting rods are forged steel, with precision insert type crankpin bearings. The piston pins are a press fit in the connecting rods.

The pistons are cast aluminum alloy. The piston pins are a floating fit in the piston.

ENGINE LUBRICATION

Lubrication schematics are shown in Figure 1. The gear type oil pump is driven from the distributor shaft, which is gear driven from the camshaft. Oil is drawn into the oil pump through a pickup screen and pipe.

Pressurized oil is routed to the oil filter. In case of excessive oil pressure, a bypass valve is provided. Filtered oil flows into the main gallery and then to the camshaft and crankshaft bearings. The valve lifter oil gallery supplies oil to the valve lifters. Oil flows from the hydraulic lifters through the hollow pushrods to the rocker arms. Oil from the overhead drains back to the crankcase through oil drain holes.

The timing chain is drip-fed from the front camshaft bearing. The pistons and piston pins are lubricated by oil splash.

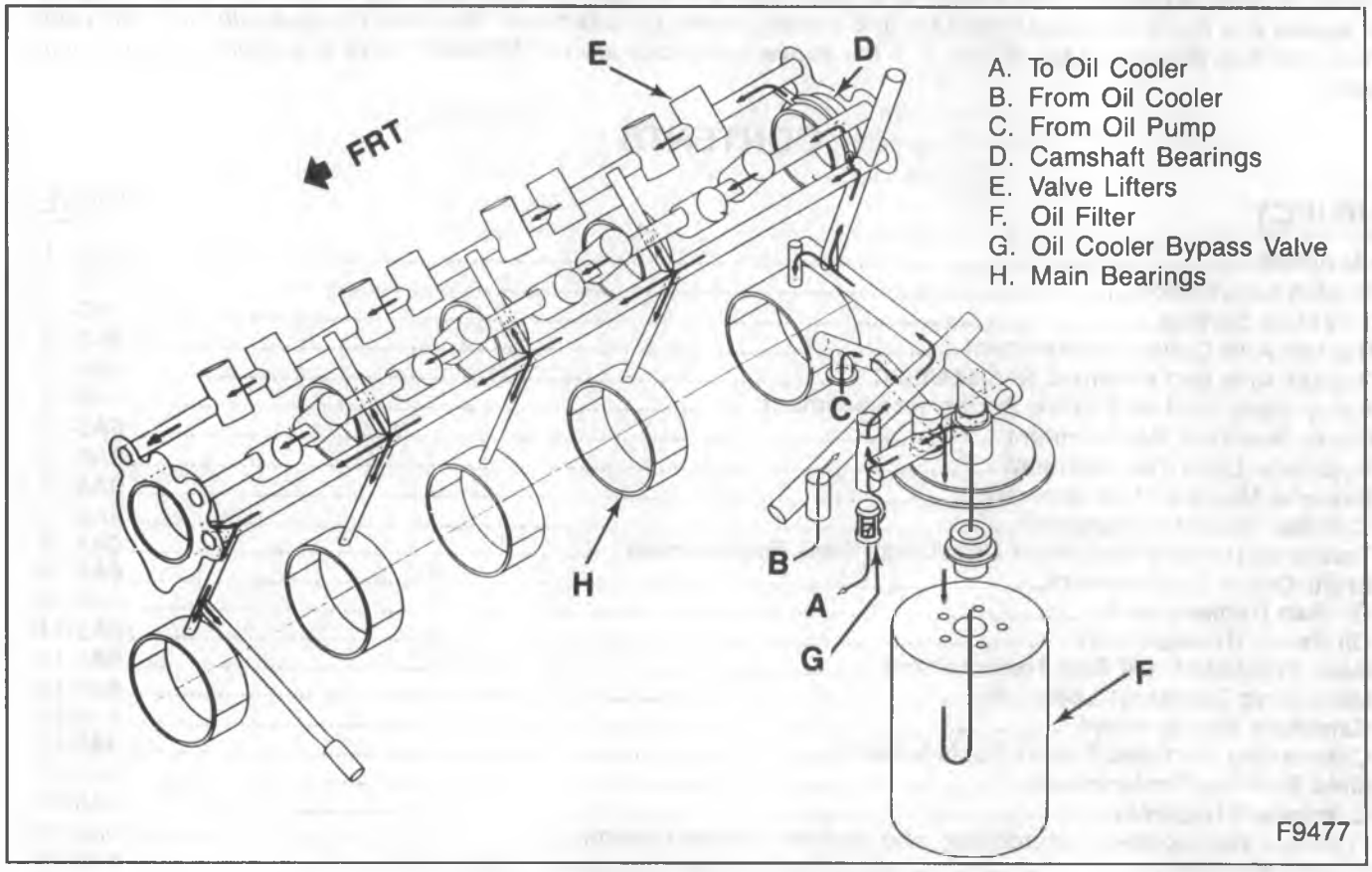

Figure 1 – Engine Lubrication Diagram

ON-VEHICLE SERVICE

ROCKER ARM COVER REPLACEMENT

Remove or Disconnect (Figure 2)

1. Battery negative cable.
2. Air cleaner.
3. Crankcase ventilation hoses left side.
4. Wiring harnesses front the clips at the rocker arm cover.
5. Spark plug wire clip from the bracket. Move the spark plug wire loom out of the way.
6. Heat stove pipe (right side rocker arm cover).
7. Air conditioning compressor lay aside and rear brace, if equipped (left side rocker arm cover).
8. Throttle control mounting bracket from intake manifold, lay aside left side rocker arm cover.
9. PCV valve from right side rocker arm cover.
10. Rocker arm cover bolts (30) and supports (31).
11. Rocker arm cover (32) and gasket.

Clean

- All traces of old gasket from the rocker arm cover and cylinder head.

Inspect

- Rocker arm cover sealing surface for distortion. Replace if necessary.

Install or Connect (Figure 2)

1. Rocker arm cover and new gasket.

NOTICE: See "Notice" on page 6A4-1 of this section.

2. Supports (31), and bolts (30).

Tighten

- Bolts (30) to 7 N•m (60 in. lbs.)

3. Air conditioning compressor and rear brace (if removed). Refer to AIR CONDITIONING (SECTION 1B).
4. Heat stove pipe (if removed).
5. Wiring harnesses and spark plug wire loom.
6. Crankcase ventilation hoses.
7. Air cleaner.
8. Battery negative cable.

ROCKER ARM AND PUSHROD REPLACEMENT

Remove or Disconnect

1. Rocker arm cover, as outlined previously in this section.
2. Rocker arm bolt.
   - If only the pushrod is to be replaced, back the rocker arm nut off until the rocker arm can be swung away from the pushrod. Then pull the pushrod out.

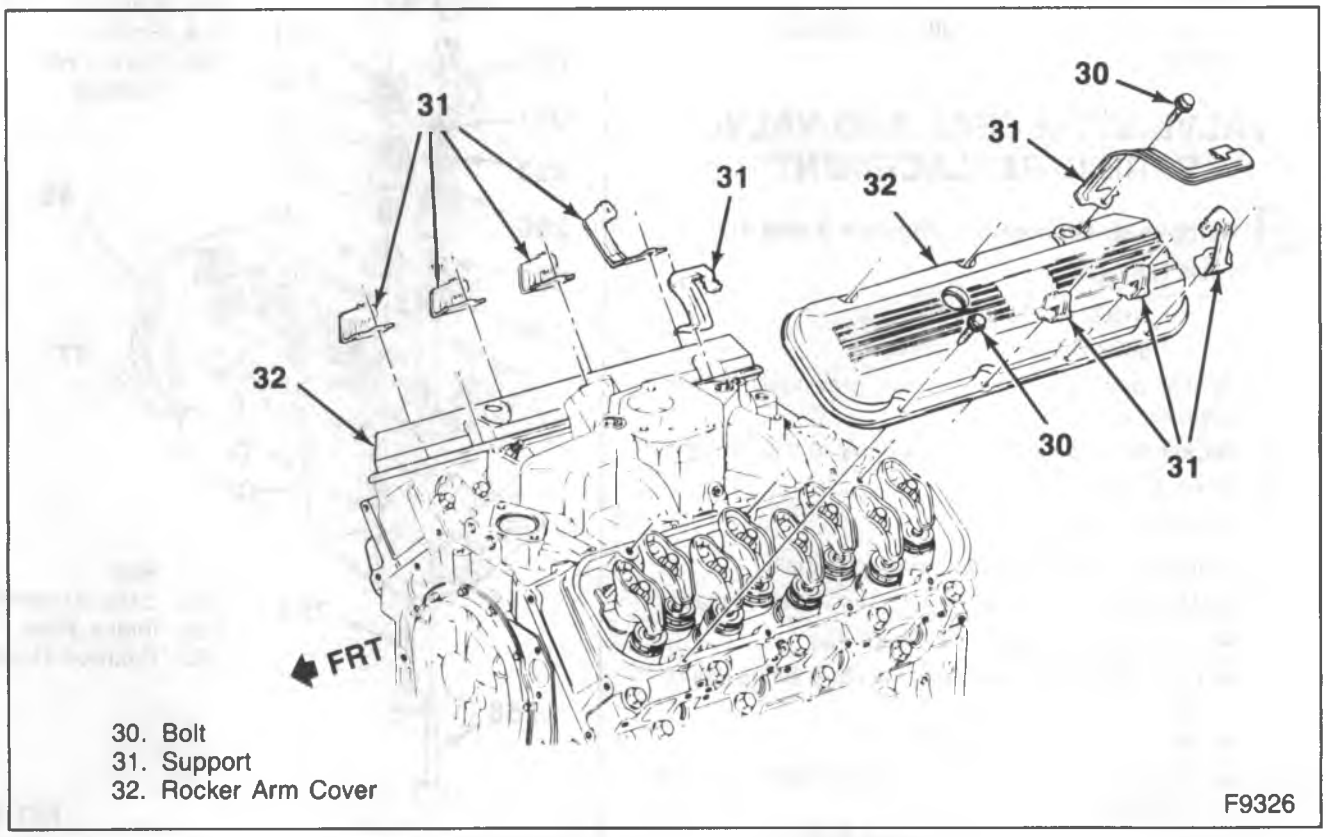

Figure 2—Rocker Arm Cover Installation

3. Rocker arm with ball.
4. Pushrod.

Important

- Store used components in order so they can be reassembled in the same location.

Inspect

- Rocker arms and balls at their mating surfaces. These surfaces should be smooth and free from scoring or other damage.
- Rocker arm areas which contact the valve stems and the sockets which contact the pushrods. These areas should be smooth and free of damage and wear.
- Pushrods for bending. Roll the pushrod on a flat surface to determine if it is bent. Replace if necessary.
- Ends of the pushrods for scoring or roughness.

Install or Connect

1. Pushrod. Make sure the pushrod seats properly in the hydraulic lifter.
2. Rocker arm with ball.

Important

- When new rocker arms and/or balls are installed, coat their bearing surfaces with High Viscosity Oil with Zinc (GM part number 12345501 or equivalent).

3. Rocker arm bolt.
4. Rocker arm cover, as outlined previously in this section.

VALVE STEM SEAL AND VALVE SPRING REPLACEMENT

Remove or Disconnect (Figures 3 and 4)

Tools Required:

J 23590 Air Adapter
J 5892-C Spring Compressor

1. Rocker arm cover, as outlined previously in this section.
2. Rocker arms, as outlined previously in this section.
3. Spark plugs.
4. Valve keepers.
   - Install J 23590 into the spark plug hole.
   - Apply compressed air to hold the valves in place.
   - Install a rocker arm bolt (figure 4).
   - Use J 5892-C to compress the valve spring (figure 4).
   - Remove the valve keepers.
   - Carefully release the spring tension. Remove J 5892-C.
5. Cap (26) and spring with damper (29).
6. Seal (33).

Install or Connect (Figures 3 and 4)

Tools Required:

J 23590 Air Adapter
J 5892-C Spring Compressor

1. New seal. Install the seal over the valve stem and seat it against the head.
2. Spring with damper, and cap.
3. Valve keepers.
   - With air pressure applied to the cylinder with J 23590, compress the spring with J 5892-C (figure 4).
   - Install the valve keepers. Use grease to hold them in place.
   - Carefully release spring pressure. Make sure the valve keepers stay in place.
   - Remove J 5892-C and J 23590.
4. Spark plugs.
5. Rocker arms, as outlined previously in this section.
6. Rocker arm covers, as outlined previously.

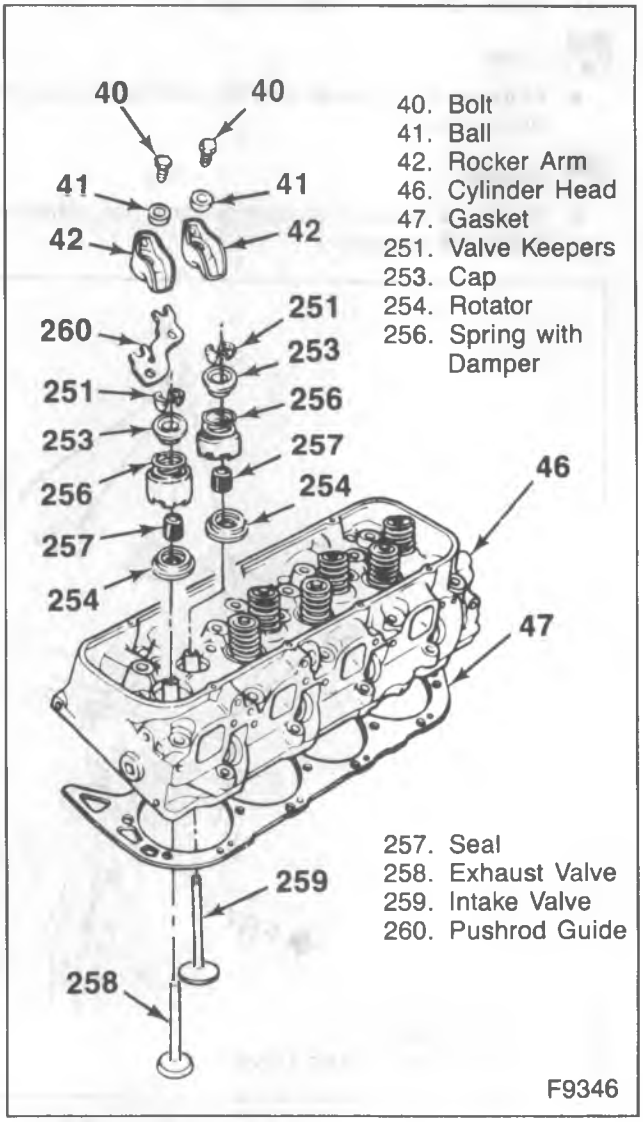

Figure 3—Cylinder Head and Components

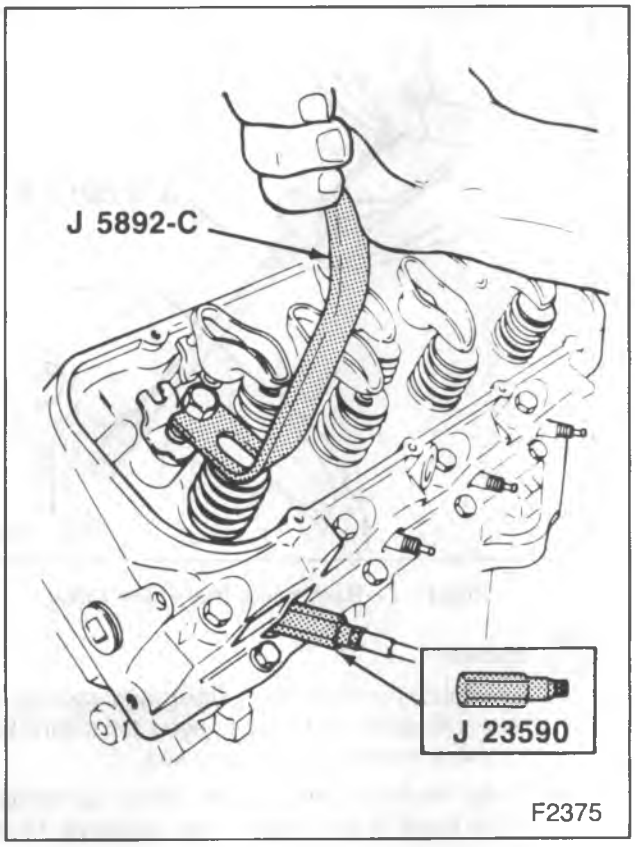

Figure 4—Compressing the Valve Spring

INTAKE MANIFOLD REPLACEMENT

Remove or Disconnect

1. Battery negative cable.
2. Air cleaner.

- Drain the cooling system.

3. Upper radiator hose and coolant pump bypass hose.
4. Heater pipe.
5. Wire at sensor at front of intake manifold and wiring connectors at throttle body.
6. Accelerator, cruise control, and TVS cables, as equipped with bracket lay aside.
7. Wiring harness from clips.
8. Cruise control transducer, if equipped.
9. Fuel lines at TBI unit.
10. Crankcase ventilation hoses.
11. Vacuum hoses, as necessary.
12. Distributor. Refer to ENGINE ELECTRICAL (SEC. 6D).
13. Wires at ignition coil.
14. EGR solenoid with bracket.
15. MAP sensor with bracket.
16. Air conditioning compressor rear bracket (if equipped).
17. Front generator/AIR pump bracket.
18. Intake manifold bolts.
19. Intake manifold.
20. Gaskets and seals.

Clean

- Old gaskets from the block, heads, and intake manifold.
- Excessive carbon deposits from the exhaust and EGR passages.
- Excessive scale and deposits from the coolant passages.

Inspect

- Manifold for cracks and gasket surface damage.

Install or Connect (Figure 5)

1. Front and rear intake manifold seals to the block.
2. Side gaskets to the cylinder heads.

NOTICE: See "Notice" on page 6A5-1 of this section.

3. Intake manifold and bolts.

Tighten

- Bolts to 40 N•m (30 ft. lbs.). Use the tightening sequence shown in Figure 5. Then, re-tighten all bolts to 40 N•m (30 ft. lbs.) again, using the sequence shown in figure 5.

4. Front generator/AIR pump bracket.
5. Air conditioning compressor rear bracket (if equipped).
6. MAP sensor with bracket.
7. EGR solenoid with bracket.
8. Wires at ignition coil.
9. Distributor. Refer to ENGINE ELECTRICAL (SEC. 6D).
10. Vacuum hoses.
11. Crankcase ventilation hoses.
12. Fuel lines.
13. Cruise control transducer (if removed).
14. Wiring harnesses to the clips.
15. Accelerator, cruise control, and TVS cables.
16. Sensor wire at front of manifold and wiring connectors to the throttle body.
17. Heater pipe.
18. Coolant pump bypass hose, heater hose, and upper radiator hose.
19. Air cleaner.
20. Battery negative cable.

- Fill the cooling system with the proper quantity and grade of coolant. Refer to MAINTENANCE AND LUBRICATION (SEC 0B).

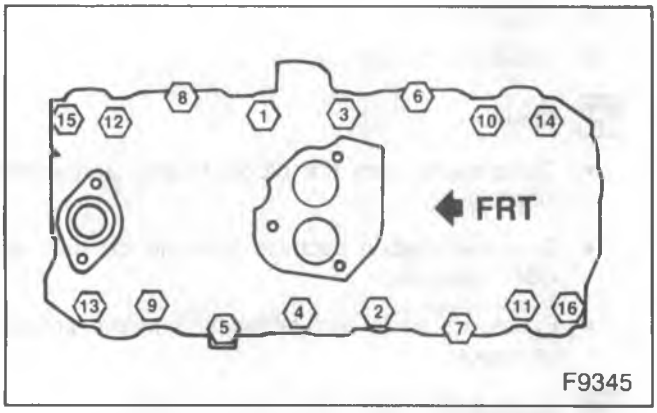

Figure 5 – Intake Manifold Tightening Sequence

HYDRAULIC LIFTER REPLACEMENT

Remove or Disconnect (Figures 6 and 7)

Tools Required:

J 3049-A Lifter Remover (Plier Type) or

J 9290-01 Lifter Remover (Side Hammer Type)

1. Rocker arm cover, intake manifold, and pushrod, as outlined previously in this section.
2. Hydraulic lifters.
   - Remove the hydraulic lifters one at a time and place them in an organizer rack. The lifters must be installed in the same bore from which they were removed.
   - A stuck hydraulic lifter can be removed using J 3049-A (figure 6) or J 9290-01 (figure 7).

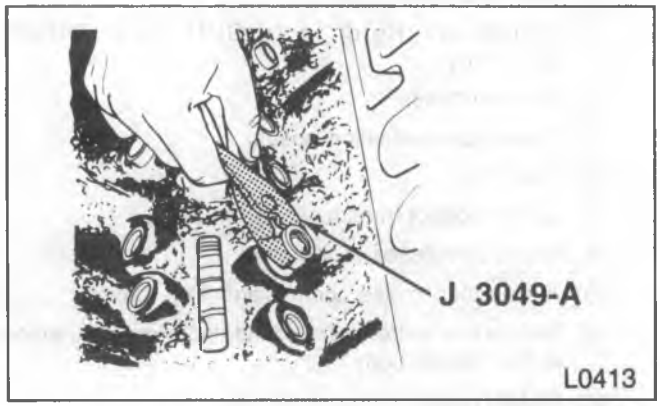

Figure 6 – Removing the Valve Lifter

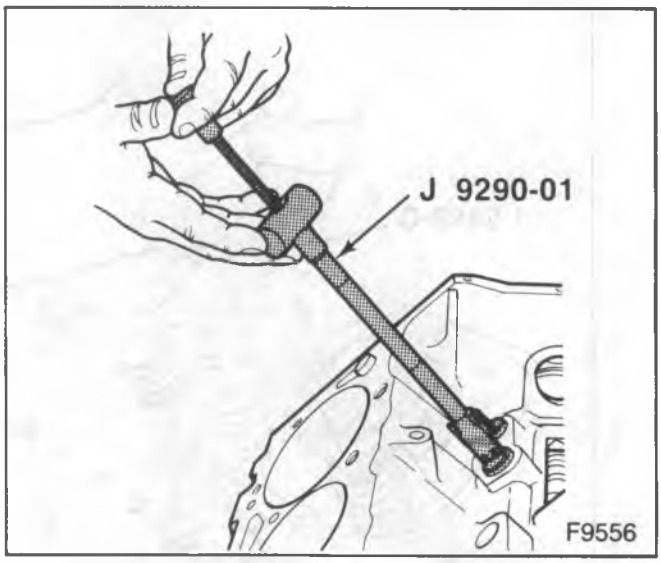

Figure 7 – Removing the Valve Lifter

Inspect

- Hydraulic lifter body for scuffing and scoring. If the lifter body wall is worn or damaged, the mating bore in the block should also be checked.
- Check the fit of each hydraulic lifter in its mating bore in the block. If the clearance is excessive, try a new lifter.
- The hydraulic lifter foot must be smooth and slightly convex. If worn, pitted, or damaged, the mating camshaft lobe should also be checked.

Hydraulic Lifter Repair

- Refer to the 1991 Light Duty Truck Unit Repair Manual.

Install or Connect

1. Hydraulic lifters to the block. Lubricate the lifter foot and body with High Viscosity Oil with Zinc (GM part number 12345501 or equivalent).

   Important

   - When any new hydraulic lifters or a new camshaft is installed, replace the engine oil and filter. Engine Oil Supplement (or equivalent) should be added to the crankcase oil.
   - Replace all hydraulic lifters when a new camshaft is installed.
2. Intake manifold, as outlined previously in this section.
3. Pushrod, as outlined previously in this section.
4. Rocker arm cover, as outlined previously in this section.

EXHAUST MANIFOLD REPLACEMENT

Remove or Disconnect

1. Battery negative cable.
2. Heat stove pipe (right side manifold).
3. Dipstick tube (right side manifold).
4. Air hose at the check valve (if equipped).
5. Spark plugs.
   - Raise the vehicle. Support with suitable safety stands.
6. Exhaust pipe at the manifold.
   - Lower vehicle.
7. Exhaust manifold bolts and spark plug heat shields.
8. Exhaust manifold.

Clean

- Mating surface on the manifold and head.
- Threads on the exhaust manifold bolts.

Install or Connect

1. Exhaust manifold.

NOTICE: See "Notice" on page 6A5-1 of this section.

2. Exhaust manifold bolts and spark plug shields.

Tighten

- Exhaust manifold bolts to 54 N•m (40 ft. lbs.).
  - Tighten the center bolts first, then continue outward each way.

3. Spark plugs.

- Raise the vehicle support with suitable safety stands.

4. Exhaust pipe to manifold.

- Lower vehicle.

5. AIR hose if equipped.
6. Dipstick tube (right side manifold).
7. Heat stove pipe (right side manifold).
8. Battery negative cable.

CYLINDER HEAD REPLACEMENT

Remove or Disconnect

1. Intake manifold, as outlined previously in this section.
2. Generator, and lay aside.
3. Generator/AIR pump bracket (right cylinder head).
4. Exhaust manifold, as outlined previously in this section.
5. Air conditioning compressor and front bracket (if equipped). Lay the compressor aside.
6. Rocker arm cover, as outlined previously in this section.
7. Spark plugs.
8. AIR crossover pipe bolts at rear of cylinder head. Push the pipe out of the way if equipped.
9. Ground strap at the rear of the cylinder head.
10. Sensor wire at the cylinder head.
11. Pushrods, as outlined previously in this section.
12. Cylinder head bolts.
13. Cylinder head.
14. Head gasket.

Clean

- Carbon deposits from combustion chambers.
- All traces of old head gasket from cylinder head and block.
- Cylinder head bolt threads and threads in the block.

Inspect

- Sealing surfaces of the block and cylinder head for nicks, heavy scratches, or other damage.

Cylinder Head Repair

- Refer to the 1991 Light Duty Truck Unit Repair Manual.

Install or Connect (Figure 8)

1. Head gasket.
   - If a steel gasket is used, coat both sides of the gasket with anaerobic sealer. Spread the sealer until it is thin and even.
   - Do not use sealer on composition steel-asbestos gaskets.
   - Place the gasket over the block dowel pins with the bead up.
2. Cylinder head. Carefully guide the cylinder head into place over the dowel pins and gasket.

NOTICE: See "Notice" on page 6A5-1 of this section.

3. Cylinder head bolts. Coat threads of the cylinder head bolts with sealing compound (GM part number 1052080 or equivalent) and install finger-tight.

Tighten

- Cylinder head bolts, in three steps, using the sequence shown in figure 9. Proper torque is 110 N•m (81 ft. lbs.).

  Step. 1. 40 N•m (30 ft. lbs.)
  Step. 2. 70 N•m (52 ft. lbs.)
  Step. 3. 110 N•m (81 ft. lbs.)

4. Pushrods, as outlined previously in this section.
5. Sensor wire.
6. Ground strap at the rear of the cylinder head.
7. AIR pipe to the rear of the cylinder head if equipped.
8. Rocker arm cover, as outlined previously in this section.
9. Spark plugs.
10. Air conditioning compressor and front bracket (if equipped). Refer to AIR CONDITIONING (SECTION 1B).

11. Exhaust manifold, as outlined previously in this section.
12. Generator/AIR pump bracket (right cylinder head).
13. Intake manifold, as outlined previously in this section.

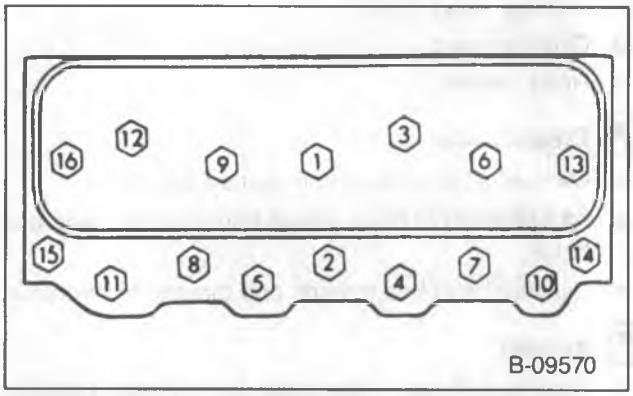

Figure 8—Cylinder Head Bolt Tightening Sequence

TORSIONAL DAMPER AND FRONT CRANKSHAFT SEAL REPLACEMENT

Remove or Disconnect (Figure 9)

Tool Required:

J 23523-E Torsional Damper Puller and Installer

1. Battery negative cable.
2. Fan belts, fan, and pulley.
3. Fan shroud assembly.
4. Accessory drive pulley.
5. Torsional damper bolt.
6. Torsional damper. Use J 23523-E (figure 9).
7. Front crankshaft seal. Pry out with a large screwdriver. Take care not to distort the front cover.
8. Crankshaft key, if necessary.

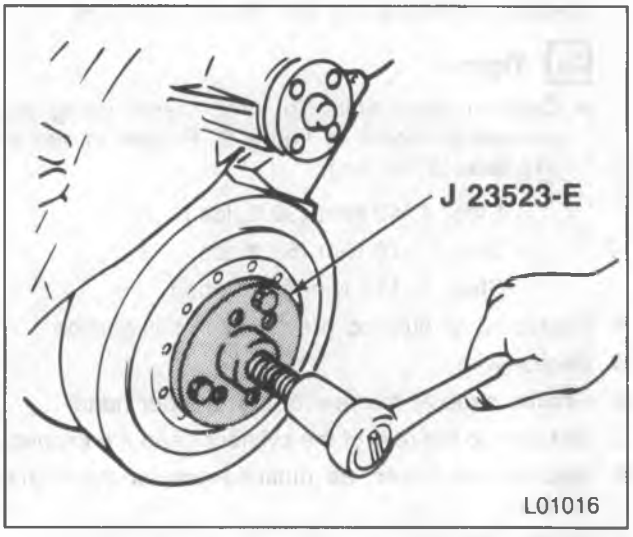

Figure 9—Removing the Torsional Damper

Inspect

- Oil seal contact area on the torsional damper shaft for grooving and roughness. Replace if necessary.

Install or Connect (Figures 10 and 11)

Tools Required:

J 22102 Seal Installer

J 23523-E Torsional Damper Puller and Installer

1. Crankshaft key, if removed.
2. Front crankshaft seal. Use J 22102 (figure 10). The open end of the seal faces inside the engine. Coat the seal lips with engine oil.

NOTICE: The inertia weight section of the torsional damper is assembled to the hub with a rubber type material. The correct installation procedures (with the proper tool) must be followed or movement of the inertia weight section of the hub will destroy the tuning of the torsional damper.

3. Stud (item A, figure 11) to the crankshaft. Thread the stud fully into the tapped hole in the crankshaft.
4. Torsional damper over the end of the stud. Align the keyway in the torsional damper shaft with the crankshaft key.

- Use a small amount of RTV sealer to seal the crankshaft key to crankshaft joint.

5. Bearing, washer and nut (figure 11).
   - Turn the nut to pull the vibration damper into place.
   - Remove the tool.

NOTICE: See "Notice" on page 6A5-1 of this section.

6. Torsional damper bolt and washer.

Tighten

- Bolt to 115 N•m (85 ft. lbs.).

7. Accessory drive pulley.
8. Fan shroud assembly.
9. Fan pulley, fan, and fan belts.
10. Battery negative cable.

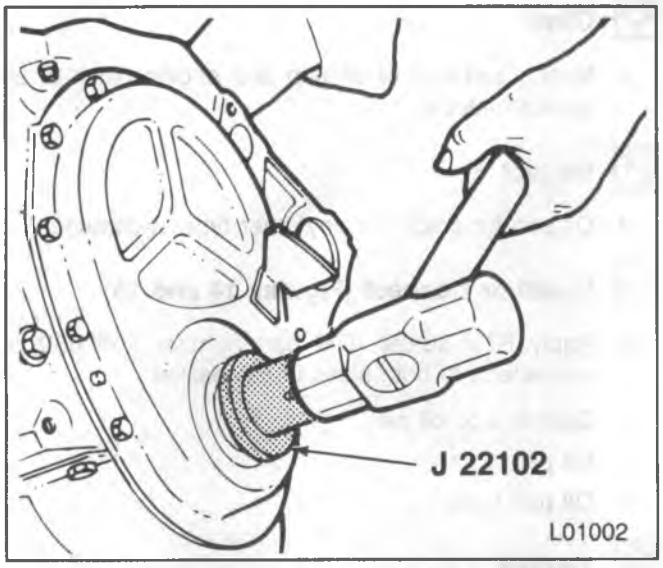

Figure 10—Installing the Front Crankshaft Seal

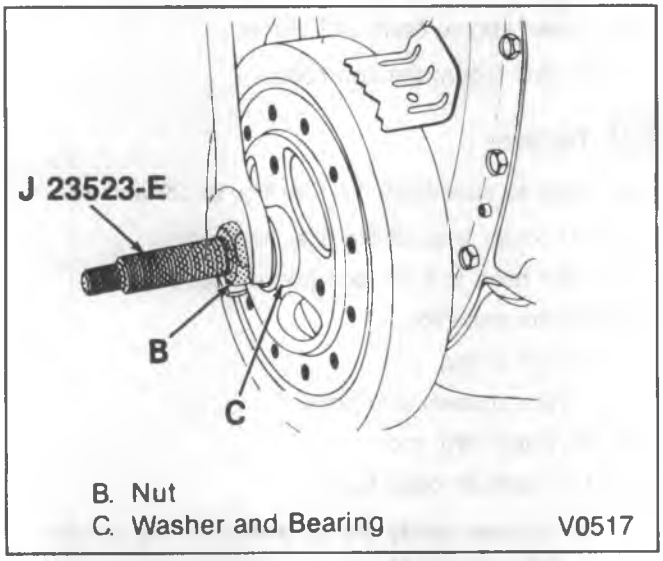

Figure 11—Installing the Torsional Damper

FRONT COVER REPLACEMENT

Remove or Disconnect (Figures 12 and 13)

1. Battery negative cable.
2. Coolant pump. Refer to ENGINE COOLING (SEC. 6B).
3. Torsional damper, as outlined previously in this section.
4. Oil pan, as outlined later in this section.
5. Front cover bolts (93).
6. Front cover (91).
7. Front cover to block gasket (90).
8. Front crankshaft oil seal from the front cover by prying out with a screwdriver.
   - Take care not to distort the front cover.

Clean

- Old gasket from the front cover, block, and oil pan.

Inspect

- Front cover for distortion and damage. Replace if necessary.

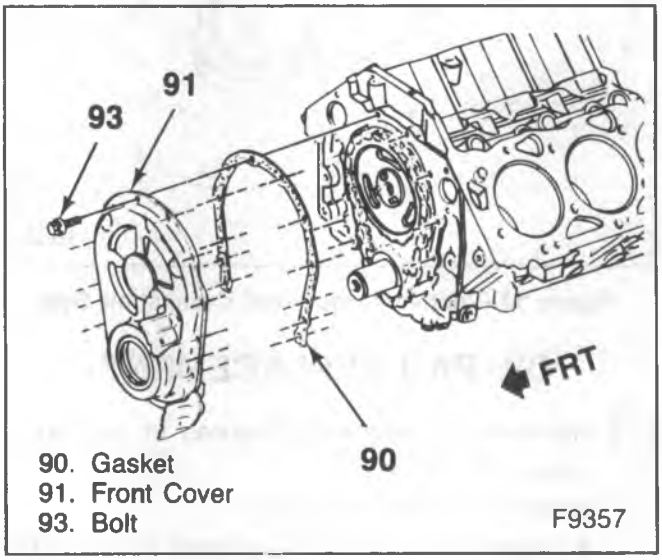

Figure 12—Front Cover

Install or Connect (Figures 12 and 13)

Tool Required:

J 22102 Seal Installer

1. Front crankshaft seal. Use J 22102 (figure 14). The open end of the seal faces inside the engine. Coat the seal lips with engine oil.
2. Front cover to block gasket to the front cover. Use gasket sealer to hold it in position.
3. Front cover to the engine.

NOTICE: See "Notice" on page 6A5-1 of this section.

4. Front cover to block bolts.

Tighten

- Front cover to block bolts (90) to 11 N•m (100 in. lbs.).

6. Torsional damper, as outlined previously in this section.
7. Coolant pump. Refer to ENGINE COOLING (SEC. 6B).
8. Battery negative cable.

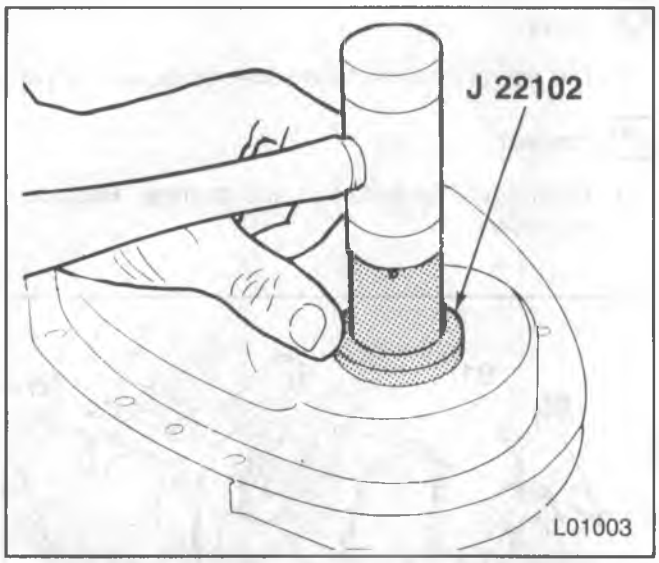

Figure 13—Installing the Front Crankshaft Seal

OIL PAN REPLACEMENT

Remove or Disconnect (Figures 14 and 15)

1. Negative battery cable.
2. Engine oil pressure gage tube.
   - Raise vehicle on hoist. Support with suitable safety stands.
   - Drain engine oil.
3. Flywheel cover strut rods.
4. Flywheel cover.
5. Oil cooler lines from the filter housing.
6. Vent hose from front axle assembly. (four-wheel drive models)
7. Starter wiring.
8. Starter assembly.
9. Engine mount through bolts.

NOTICE: When raising or supporting the engine for any reason, do not use a jack under the oil pan, crankshaft pulley, or any sheet metal. Due to the small clearance between the oil pan and the oil pump screen, jacking against the oil pan may cause it to be bent against the pump screen, resulting in a damaged oil pickup unit.

   - Raise engine with suitable jack.

9. Oil pan bolts.
10. Oil pan.

Clean

- Mating surfaces of oil pan and engine block of all gasket material.

Inspect

- Oil pan for cracks or any other type of damage.

Install or Connect (Figures 14 and 15)

- Apply RTV sealer (GM part number 1052080 or equivalent) to both sides of the gasket.

1. Gasket onto oil pan.
2. Oil pan.
3. Oil pan bolts.

Tighten

- Bolts to 18 N•m (13 ft. lbs.)
- Lower engine down into place.

4. Engine mount through bolts.

Tighten

- Bolts to specifications. See figures 29 and 30.

5. Oil cooler lines at the filter housing.
6. Vent hose to front axle (four-wheel drive).
7. Starter assembly.
8. Starter wiring.
9. Flywheel cover and bolts.
10. Flywheel strut rods.
11. Oil pressure gage tube.
    - Remove safety stands and lower the vehicle.
    - Fill engine with proper quantity and grade of oil. Refer to MAINTENANCE AND LUBRICATION (SEC. 0B).
12. Negative battery cable.

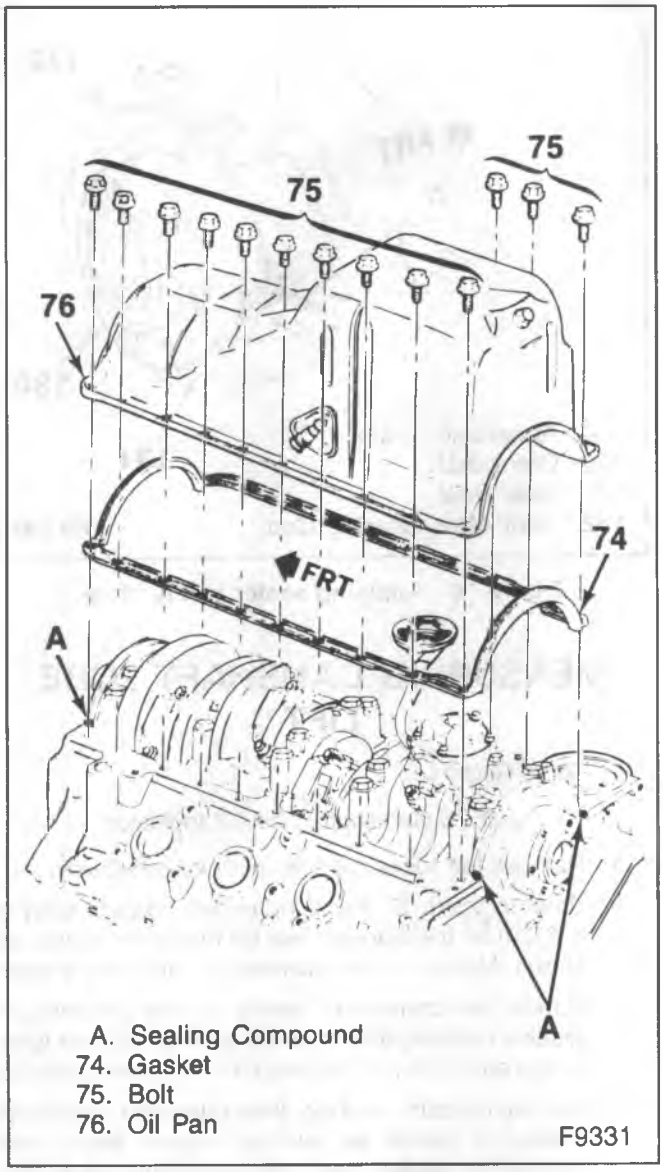

Figure 14 – Oil Pan

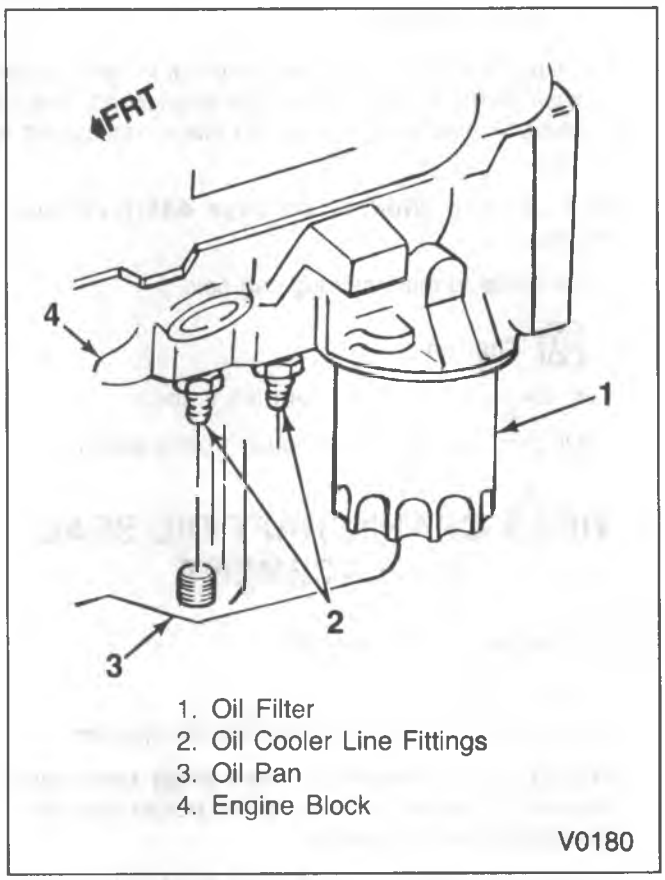

Figure 15 – Oil Cooler Line Fittings

OIL PUMP REPLACEMENT

Remove or Disconnect

1. Oil pan, as outlined previously in this section.
2. Oil pump to main bearing cup bolts.
3. Oil pump.

Inspect

- Oil pump pickup tube for damage and looseness. If pick-up tube or screen are damaged, the pump must be replaced. They are not serviced separately.

Oil Pump Repair

- Refer to the 1991 Light Duty Truck Unit Repair Manual.

Install or Connect

1. Oil pump to the engine. Align the slot in the oil pump shaft with the tang on the distributor shaft. The oil pump should slide easily into place. No gasket is used.

NOTICE: See "Notice" on page 6A5-1 of this section.

2. Oil pump to main bearing cap bolt.

Tighten

- Oil pump bolt to 90 N•m (65 ft. lbs.).

3. Oil pan, as outlined previously in this section.

REAR CRANKSHAFT OIL SEAL REPLACEMENT

Remove or Disconnect

1. Transmission.
2. Clutch and flywheel or flexplate, as equipped.

NOTICE: Care should be taken when removing the rear crankshaft oil seal so as not to nick the crankshaft sealing surface.

3. Rear crankshaft oil seal. Take care not to damage the crankshaft seal surface.

Inspect

- Chamfer on crankshaft for grit, loose rust, and burrs. Correct as necessary.

Clean

- Seal running surface on the crankshaft with a non-abrasive cleaner.

Install or Connect (Figure 16)

Tool Required:

J 38841 Seal Installer

1. Rear crankshaft oil seal.
   - Lubricate the inner and outer diameter of the seal with engine oil.
   - Install the seal on J 38841.
   - Position J 38841 against the crankshaft. Thread the attaching screws into the tapped holes in the crankshaft.
   - Tighten the screws securely with a screwdriver. This will ensure that the seal is installed squarely over the crankshaft.
   - Turn the handle until it bottoms.
   - Remove J 38841.
2. Flywheel.
3. Transmission.

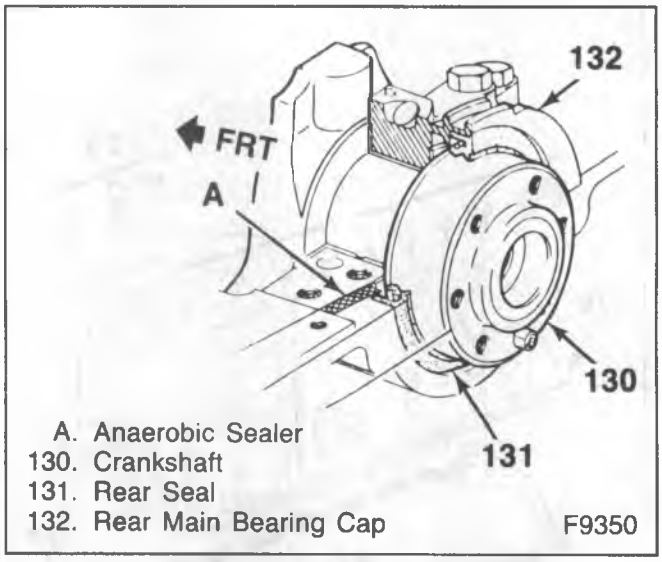

Figure 16—Applying sealer to the block

MEASURING CAMSHAFT LOBE LIFT

Tools Required:

J 8520 Camshaft Lobe Lift Indicator

1. Remove the rocker arm as outlined previously.
2. Refer to figure 17. Position the dial indicator (part of J 8520) so the plunger rests on the pushrod end, as shown. Make sure the pushrod is in the lifter socket.
3. Rotate the crankshaft slowly in the direction of rotation until the lifter is on the heel of the cam lobe. At this point, the pushrod will be in its lowest position.
4. Set dial indicator on zero, then rotate the crankshaft slowly, or attach an auxiliary starter switch and "bump" the engine over, until the pushrod is in fully raised position.

Important

- Whenever the engine is cranked remotely at the starter, with a special jumper cable or other means, the primary leads should be disconnected from the distributor or ignition coil.

5. Compare the total lift recorded from the dial indicator with specifications.
6. If camshaft readings for all lobes are within specifications, remove dial indicator assembly.
7. Install the rocker arm and bolts as previously outlined in this section.

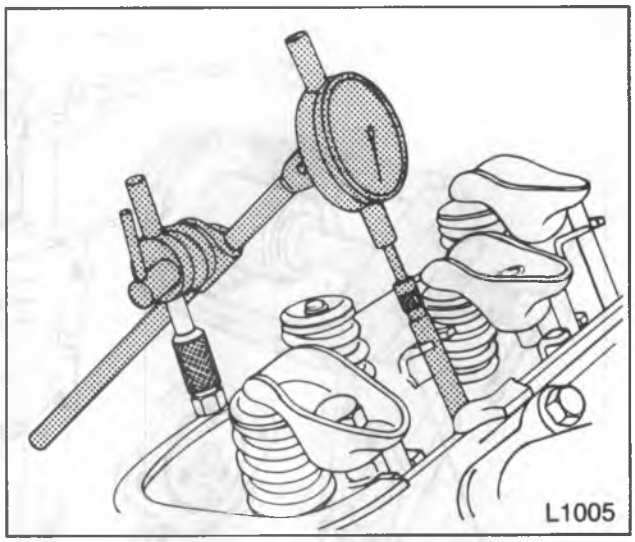

Figure 17—Measuring Camshaft Lobe Lift

CAMSHAFT REPLACEMENT

Remove or Disconnect (Figures 18, 19 and 20)

Tool Required:

J 28509-A Crankshaft Sprocket Puller

1. Battery negative cable.
2. Air cleaner.
3. Grille.
4. Air conditioning condenser from its mounting and swing it forward.
5. Fan, shroud, and radiator. Refer to ENGINE COOLING (SEC. 6B1) and RADIATOR (SEC. 6B2).
6. Coolant pump. Refer to ENGINE COOLING (SEC. 6B1).
7. Front cover, as outlined previously in this section.
8. Intake manifold, as outlined previously in this section.
9. Pushrods and hydraulic lifters, as outlined previously in this section.

- Align the timing marks (figure 5).

10. Camshaft sprocket bolts.
11. Camshaft sprocket and timing chain. The sprocket is a light interference fit on the camshaft. Tap the sprocket on its lower edge to loosen it.
12. Crankshaft sprocket (if required). Use J 28509-A (figure 19).
13. Front engine mounting through-bolts.

NOTICE: When raising or supporting the engine for any reason, do not use a jack under the oil pan, crankshaft pulley, or any sheet metal. Due to the small clearance between the oil pan and the oil pump screen, jacking against the oil pan may cause it to be bent against the pump screen, resulting in a damaged oil pickup unit.

- Raise the engine.

14. Camshaft.
    - Install two or three 5/16-18 bolts 100-125 mm (4-5 inches) long into the camshaft threaded holes. Use these bolts to handle the camshaft (figure 20).
    - Pull the camshaft from the block. Use care to prevent damage to the camshaft bearings.

Cleaning, Inspection, and Repair

Clean, inspect, and repair or replace the camshaft and related components, as outlined in the 1991 Light Duty Truck Unit Repair Manual.

The unit repair manual also describes camshaft bearing replacement.

Install or Connect (Figures 18, 19 and 20)

Tool Required:

J 22102 Crankshaft Sprocket Installer

- Coat the camshaft lobes and journals with High Viscosity Oil with Zinc (GM part number 12345501 or equivalent).

1. Two or three 5/16-18 bolts 100-125 mm (4-5 inches) long into the camshaft threaded holes. Use these bolts to handle the camshaft.
2. Camshaft to the engine (figure 20). Handle the camshaft carefully to prevent damage to the camshaft bearings.

- Lower the engine.

3. Engine mount through-bolts.

Tighten

- Through-bolts to specifications. Refer to figures 27 through 30.

3. Crankshaft sprocket (if removed). Use J 22102 (figure 19). Make sure the timing mark faces outside.
4. Camshaft sprocket and timing chain.

Important

- Line up the timing marks on the camshaft sprocket and crankshaft sprocket (figure 18).

5. Camshaft sprocket bolts.

Tighten

- Bolts to 27 N•m (20 ft. lbs.).

6. Hydraulic lifters and pushrods, as outlined previously in this section.

Important

- Replace all hydraulic lifters, crankcase oil and filter, and add GM Engine Oil Supplement (or equivalent) to the engine oil whenever a new camshaft is installed.

7. Intake manifold, as outlined previously in this section.
8. Front cover, as outlined previously in this section.
9. Coolant pump. Refer to ENGINE COOLING (SEC. 6B1) in this section.
10. Rocker arm covers, as outlined previously in this section.

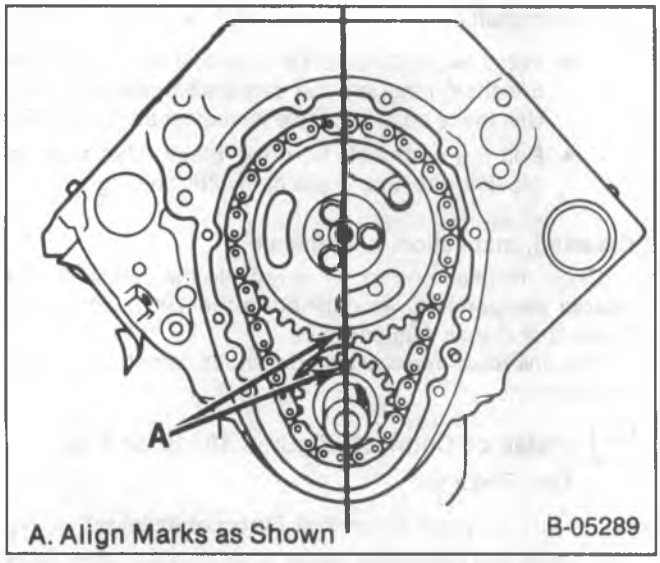

Figure 18—Timing Marks

11. Fan, shroud, and radiator. Refer to ENGINE COOLING (SEC. 6B1) and RADIATOR (SEC. 6B2).
12. Air conditioning condenser.
13. Grille.
14. Air cleaner.
15. Battery negative cable.

- Fill the cooling system with the proper quantity and grade of coolant. Refer to MAINTENANCE AND LUBRICATION (SEC 0B).

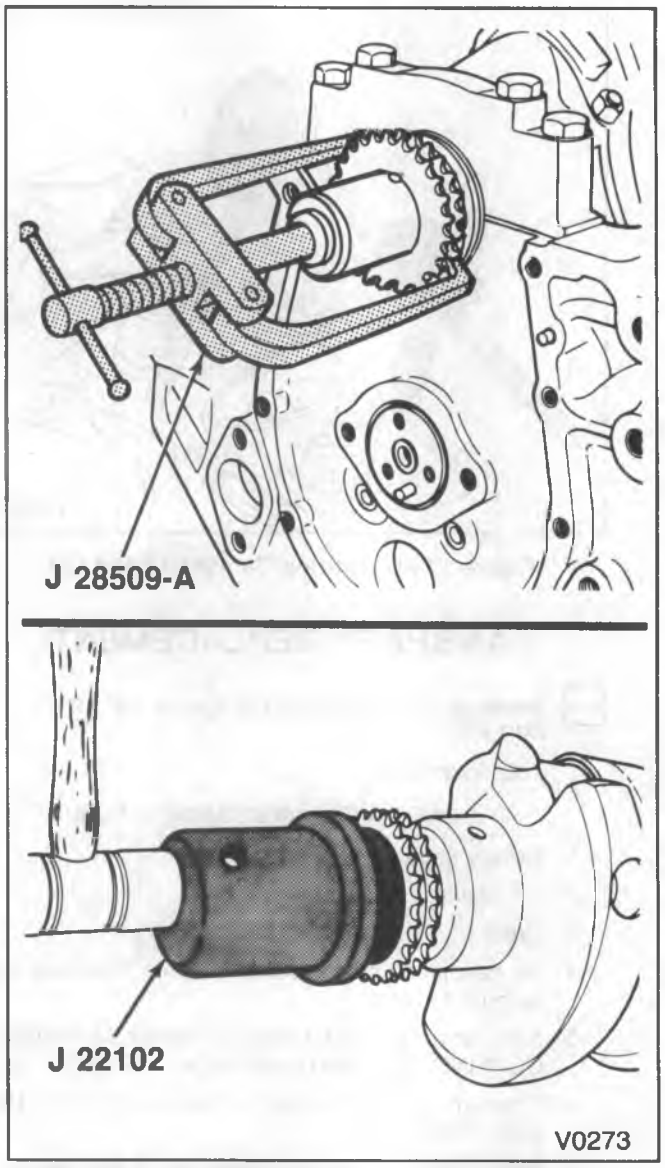

Figure 19—Replacing the Crankshaft Sprocket

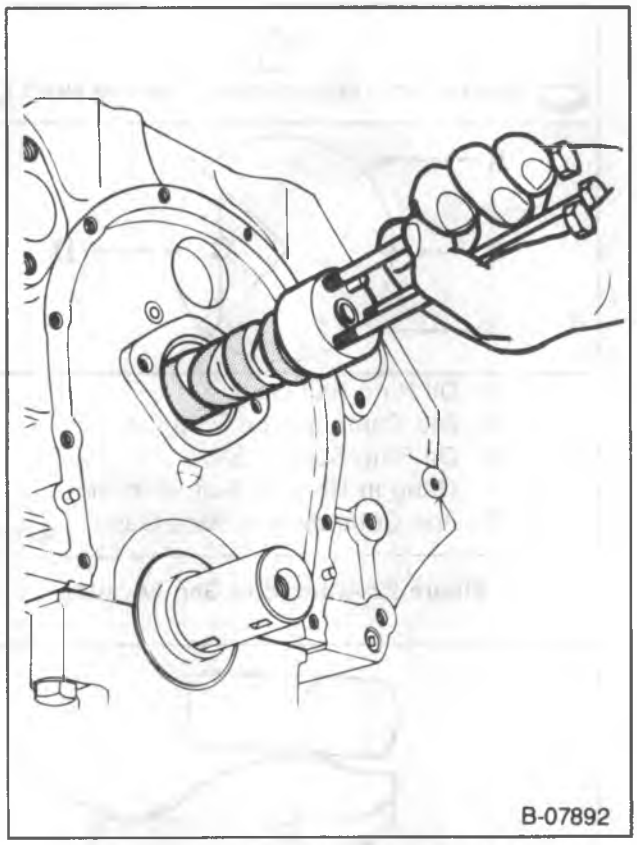

Figure 20—Replacing the Camshaft

CONNECTING ROD AND PISTON REPLACEMENT

Remove or Disconnect (Figure 21)

Tool Required:

J 5239 Guide Set

1. Cylinder head, as outlined previously in this section.
2. Oil pan, as outlined previously in this section.
3. Oil pump, as outlined previously in this section (if necessary).
4. Ridge or deposits from the upper end of the cylinder bores.
   - Turn the crankshaft until the piston is at BDC.
   - Place a cloth on top of the piston.
   - Perform the cutting operation with a ridge reamer.
   - Turn the crankshaft until the piston is at TDC.
   - Remove the cloth and cuttings.
5. Connecting rod cap. Check the connecting rod and cap for identification marks. Mark the parts if required. The connecting rod and cap must be kept together as mating parts.
6. Connecting rod and piston.
   - Attach J 5239 to the connecting rod bolts (figure 21).
   - Use the long guide rod of J 5239 to push the connecting rod and piston out of the bore.
7. Connecting rod bearing.

Cleaning, Inspection, and Repair

Clean, inspect, and repair or replace the components as necessary. Measure connecting rod bearing clearance, piston clearance, ring clearances, etc. Refer to the 1991 Light Duty Truck Unit Repair Manual.

The unit repair manual contains information on:

- Connecting rod and piston.
- Piston rings.
- Connecting rod and pin.
- Cylinder bores.

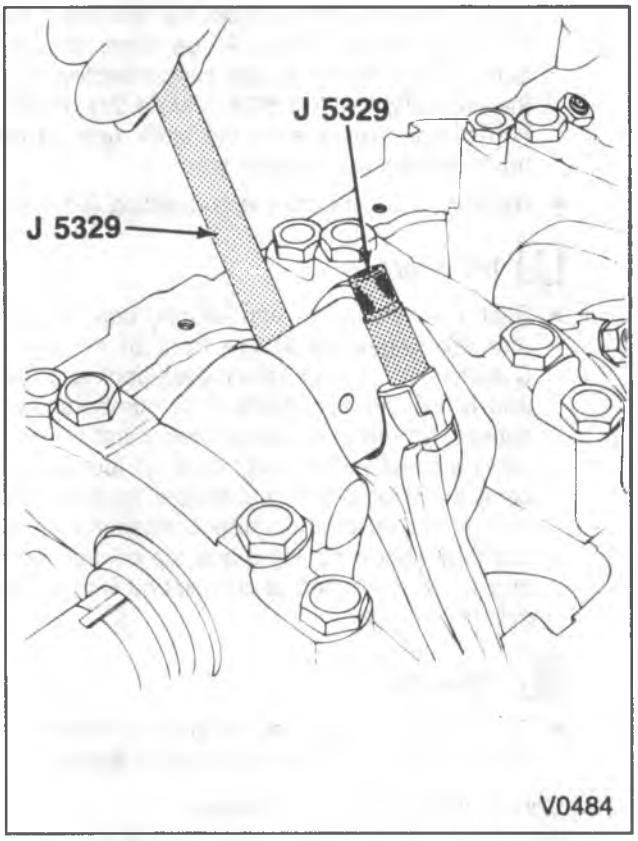

Figure 21—Replacing the Connecting Rod and Piston

Install or Connect (Figures 21 through 25)

Tools Required:

J 5239 Connecting Rod Guide Set

J 8037 Ring Compressor

- Make sure the cylinder walls are clean. Lubricate the cylinder wall lightly with engine oil.
- Make sure the piston is installed in the matching cylinder for which it was fitted. Used pistons must be installed in the cylinder from which they were removed.

1. Connecting rod bearings.
   - Be certain that the bearings are of the proper size.
   - Install the bearings in the connecting rod and connecting rod cap.
   - Lubricate the bearings with engine oil.

2. Piston and connecting rod to the proper bore.
   - With the connecting rod cap removed, install J 5239 onto the connecting rod studs.
   - Locate the piston ring end gaps as shown in figure 22. Lubricate the piston and rings with engine oil.
   - Without disturbing the ring end gap location, install J 8037 over the piston (figure 23).
   - The piston must be installed so that the valve clearance notches are towards the center of the engine (figure 24).
   - Place the piston in its matching bore. Using light blows with a hammer handle, tap the piston down into its bore (figure 23). At the same time, from beneath the vehicle guide the connecting rod to the crankshaft with J 5239 (figure 21). Hold the ring compressor against the block until all rings have entered the cylinder bore.
   - Remove J 5239 from the connecting rod bolts.

Important

- Each connecting rod and bearing cap should be marked, beginning at the front of the engine. Cylinders 1, 3, 5 and 7 are the left bank and 2, 4, 6 and 8 are the right bank. The numbers on the connecting rod and bearing cap must be on the same side when installed in the cylinder bore. If a connecting rod is ever transposed from one block or cylinder to another, new connecting rod and bearings should be fitted and the connecting rod should be numbered to correspond with the new cylinder number.

Measure

- Connecting rod bearing clearance. Refer to the 1991 Light Duty Truck Unit Repair Manual.

3. Connecting rod cap and bearing.

NOTICE: See "Notice" on page 6A5-1 of this section.

4. Connecting rod cap nuts.

Tighten

- Connecting rod cap nuts to 66 N•m (48 ft. lbs.).

Measure

- Connecting rod side clearance. Use a feeler gage between the connecting rod and crankshaft (figure 25). The correct clearance is 0.013-0.023-inch (0.33-0.58 mm).

5. Oil pump (if removed), as outlined previously in this section.
6. Oil pan and cylinder head, as outlined previously in this section.

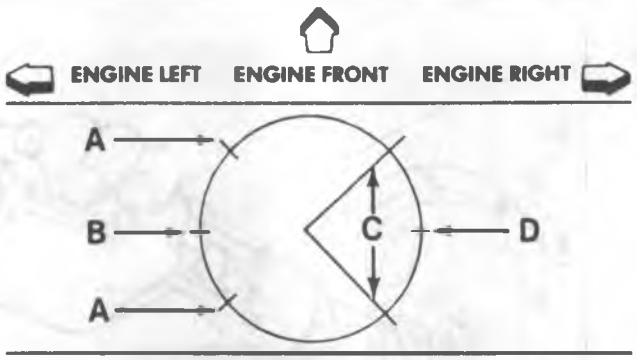

A. Oil Ring Rail Gaps
B. 2nd Compression Ring Gap
C. Oil Ring Spacer Gap (Tang In Hole Or Slot With Arc)
D. Top Compression Ring Gap

B-07935

Figure 22 – Ring End Gap Location

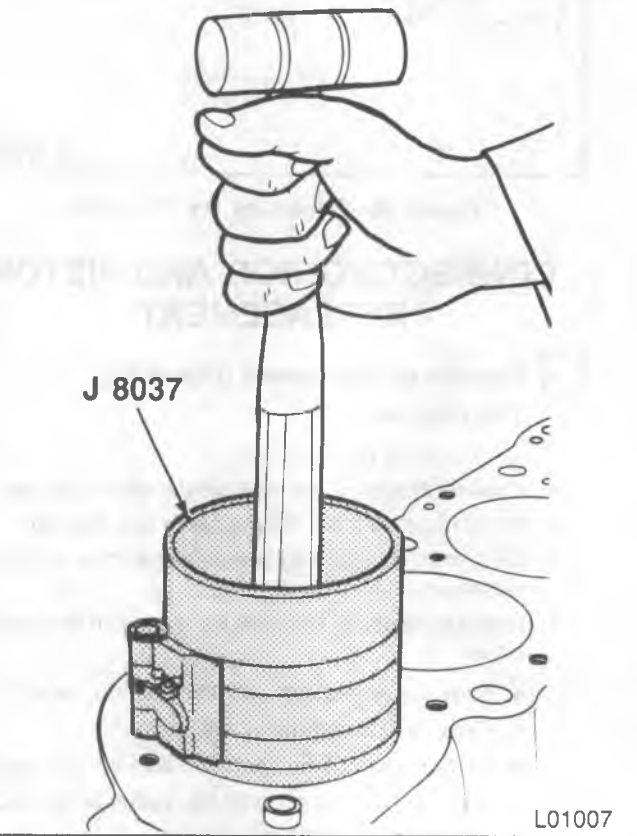

Figure 23 – Installing the Piston

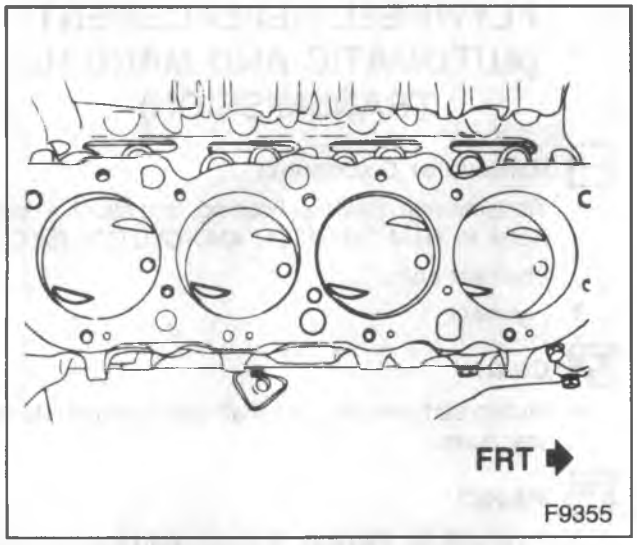

Figure 24—Pistons Installed

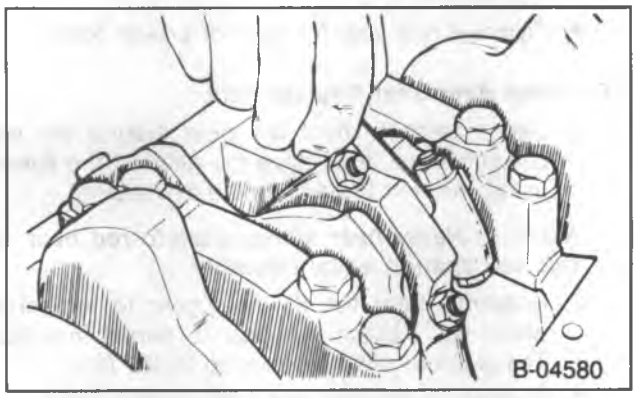

Figure 25—Measuring Connecting Rod Side Clearance

MAIN BEARING REPLACEMENT

Remove or Disconnect (Figure 26)

Tool Required:

J 8080 Main Bearing Remover/Installer

1. Spark plugs.
2. Oil pan, as outlined previously in this section.
3. Oil pump, as outlined previously in this section.
4. Main bearing caps.
   - Check the main bearing caps for location markings. Mark the caps if necessary. The caps must be returned to their original locations during assembly.
5. Lower main bearing inserts from the main bearing caps.
6. Rear crankshaft oil seal, if necessary, as outlined previously in this section.
7. Upper main bearing inserts.
   - Insert J 8080 into the crankshaft oil hole (figure 26).
   - Rotate the crankshaft to "turn" the bearing insert out of the block.

Cleaning, Inspection, and Repair

Clean, inspect, and repair or replace the components as required. Refer to the 1991 Light Duty Truck Unit Repair Manual. The unit repair manual contains information on:

- Crankshaft.
- Main and connecting rod bearings.

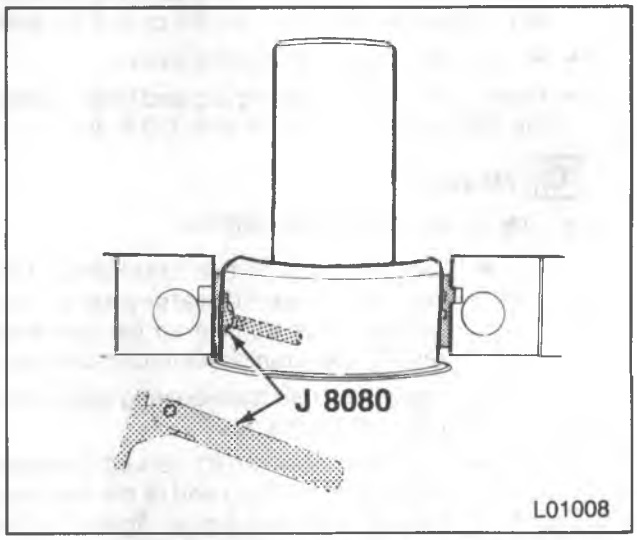

Figure 26—Removing the Main Bearing

Install or Connect (Figures 26 and 27)

Tool Required:

J 8080 Main Bearing Remover/Installer

1. Upper main bearing inserts.
   - Insert tool J 8080 into a crankshaft main bearing oil hole (figure 26).
   - Apply engine oil to inserts of the proper size.
   - Insert the plain end (without the bearing tang) of the insert between the crankshaft and the notched side of the block.
   - Rotate the crankshaft to "roll" the insert into the block.
   - Remove the tool.
2. Lower main bearing inserts to the main bearing caps.
   - Make sure the inserts are of the proper size.
   - Apply engine oil to the inserts.

Measure

- Main bearing clearance. Refer to the 1991 Light Duty Truck Unit Repair Manual. If the engine is in the vehicle, the crankshaft must be supported upward to remove any clearance from the upper bearing. The total clearance can then be measured between the lower bearing and journal.

NOTICE: See "Notice" on page 6A5-1 of this section.

3. Main bearing caps (except rear cap) and bolts to the block.

Tighten

- Main bearing cap bolts to 135 N•m (100 ft. lbs.).

4. Rear main bearing cap.
   - Apply a brush-on type oil sealing compound to the mating surface of the block and cap. Do not allow any sealant on either crankshaft or rear oil seal.
   - Apply engine oil to the bearing insert.
   - Install the rear main bearing cap and bolts. Tighten the bolts temporarily to 14 N•m (10 ft. lbs.).

Measure

- Crankshaft end play, as follows:
  - Tap the end of the crankshaft first rearward then forward with a lead hammer. This will line up the rear main bearing and crankshaft thrust surfaces.
  - Tighten the rear main bearing cap bolts to 135 N•m (100 ft. lbs.).
  - With the crankshaft forced forward, measure at the front end of the rear main bearing with a feeler gage (figure 27). The proper clearance is 0.006-0.010-inch (0.152-0.254 mm).

5. Oil pump, as outlined previously in this section.
6. Oil pan, as outlined previously in this section.
7. Spark plugs.

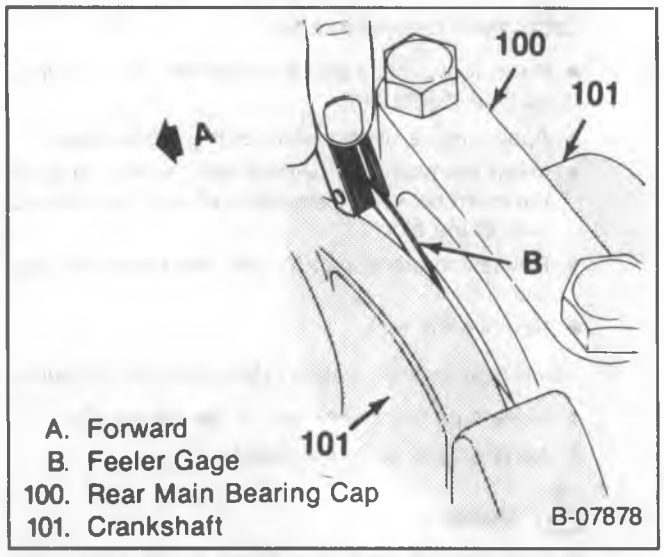

Figure 27 – Measuring Crankshaft End Play

CRANKSHAFT REPLACEMENT

1. Remove the engine, as outlined later in this section.
2. Refer to the 1991 Light Duty Truck Unit Repair Manual for crankshaft replacement procedures.

FLYWHEEL REPLACEMENT (AUTOMATIC AND MANUAL TRANSMISSION)

Remove or Disconnect

1. Transmission, flywheel housing, and clutch (if used). Refer to TRANSMISSION AND CLUTCH (SEC 7).
2. Flywheel bolts.
3. Flywheel.

Clean

- Mating surfaces of crankshaft and flywheel. Remove any burrs.

Inspect

- Flywheel for burning, scoring, warping and wear. Replace the flywheel if necessary. Do not machine the flywheel.
- Flywheel ring gear for worn or broken teeth.

Flywheel Ring Gear Replacement

1. Use a torch to heat the gear around the entire circumference, then drive the gear off the flywheel, using care not to damage the flywheel.

NOTICE: Never heat starter gear to red heat as this will change metal structure.

2. Uniformly heat the flywheel gear to temperature which will expand the gear to permit installation. Temperature must not exceed 200°C (392°F).
3. As soon as the gear has been heated, install on the flywheel.

Install or Connect (Figure 28)

1. Flywheel (110) to the crankshaft.

Important

- Some engines may not have a dowel pin to index the flywheel to the crankshaft. On these engines, it is possible to install the flywheel improperly (rotated from the proper position). If the flywheel is installed rotated from the proper position, engine balance will be adversely affected.
- If no dowel pin is used, align the close-spaced hole in the flywheel (item A, figure 28) with the untapped hole in the crankshaft.

NOTICE: See "Notice" on page 6A5-1 of this section.

2. Flywheel bolts.

Tighten

- Flywheel bolts to 90 N•m (65 ft. lbs.).

3. Clutch, (if used) flywheel housing, and transmission.

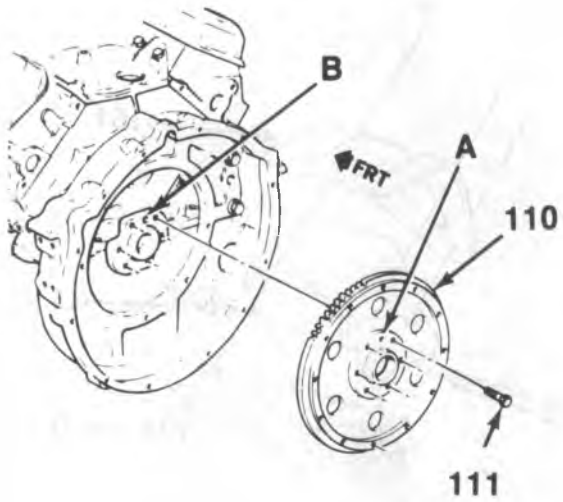

A. Hole in Flywheel
B. Untapped Hole in Flange
110. Flywheel
111. Bolt

F6357

Figure 28 – Flywheel

ENGINE MOUNTINGS

NOTICE: Broken or deteriorated mountings can cause misalignment and eventual destruction of certain drive train components. When a single mounting breakage occurs, the remaining mountings are subjected to abnormally high stresses.

INSPECTING ENGINE MOUNTINGS

Front Engine Mountings

NOTICE: When raising or supporting the engine for any reason, do not use a jack under the oil pan, any sheet metal or crankshaft pulley. Due to the small clearance between the oil pan and the oil pump screw, jacking against the oil pan may cause it to be bent against the pump screw, resulting in a damaged oil pickup unit.

1. Raise the engine to remove weight from the mountings and to place a slight tension on the rubber cushion. Observe both mountings while raising the engine.
2. Replace the mounting if the following conditions exist:
   - Hard rubber surface covered with heat check cracks.
   - Rubber cushion separated from the metal plate of the mounting.
   - Rubber cushion split through the center.
3. If there is movement between a metal plate of the mounting and its attaching points, lower the engine and tighten the bolts or nuts attaching the mounting to the engine, frame, or bracket.

Rear Mountings

1. Push up and pull down on the transmission tailshaft. Observe the transmission mounting.
2. Replace the mounting if the following conditions exist:
   - Mounting bottomed out (tailshaft can be moved up but not down).
3. If there is relative movement between a metal plate of the mounting and its attaching point, tighten the bolts or nuts attaching the mounting to the transmission or crossmember.

FRONT MOUNTING REPLACEMENT

Remove or Disconnect (Figures 29, 30, 31 and 32)

NOTICE: For steps 2 and 3 see "Notice" on page 6A5-1 of this section.

1. Battery negative cable.

NOTICE: When raising or supporting the engine for any reason, do not use a jack under the oil pan, any sheet metal or crankshaft pulley. Due to the small clearance between the oil pan and the oil pump screw, jacking against the oil pan may cause it to be bent against the pump screw, resulting in a damaged oil pickup unit.

- Support the engine with a suitable jack. Do not load the engine mounting.

2. Engine mounting through-bolt and nut.

NOTICE: Raise the engine only enough for sufficient clearance. Check for interference between the rear of the engine and the dash panel which could cause distributor damage.

- Raise the engine only enough to permit removal of the engine mounting.

3. Mounting assembly bolts, nuts and washers.
4. Mounting assembly.

Install or Connect (Figures 29, 30, 31 and 32)

1. Mounting assembly.
2. Mounting assembly bolts, nuts and washers.

   Tighten

   - Fasteners to specifications. Refer to figures 29 through 32.

3. Engine mount through-bolt and nut. Lower the engine until the bolt can be inserted. Install the nut.

   Tighten

   - Through-bolt to specifications. Refer to figures 29, 30, 31 and 32.

4. Battery negative cable.

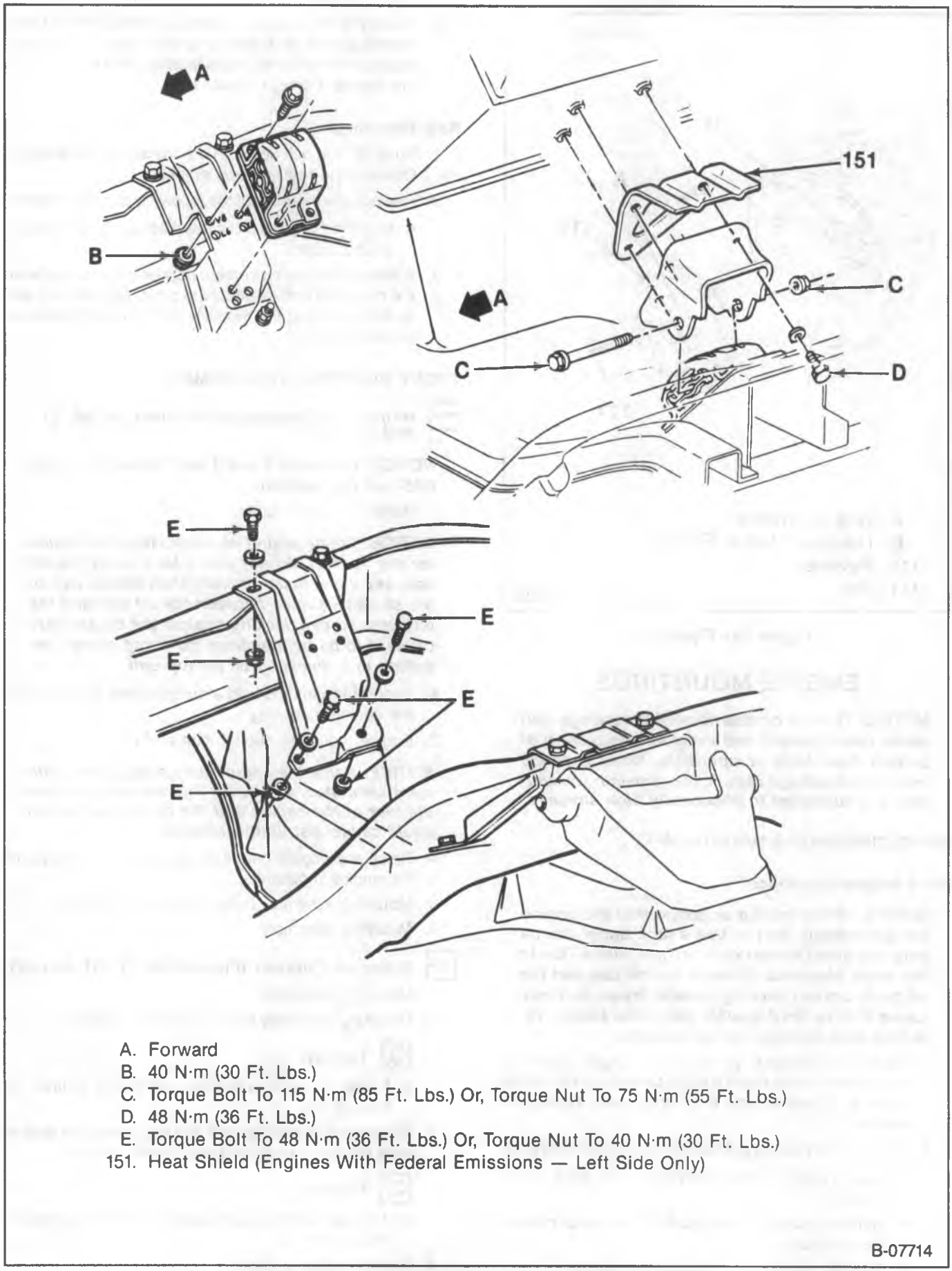

A. Forward
B. 40 N·m (30 Ft. Lbs.)
C. Torque Bolt To 115 N·m (85 Ft. Lbs.) Or, Torque Nut To 75 N·m (55 Ft. Lbs.)
D. 48 N·m (36 Ft. Lbs.)
E. Torque Bolt To 48 N·m (36 Ft. Lbs.) Or, Torque Nut To 40 N·m (30 Ft. Lbs.)
151. Heat Shield (Engines With Federal Emissions — Left Side Only)

Figure 29—Front Engine Mounting (R Models)

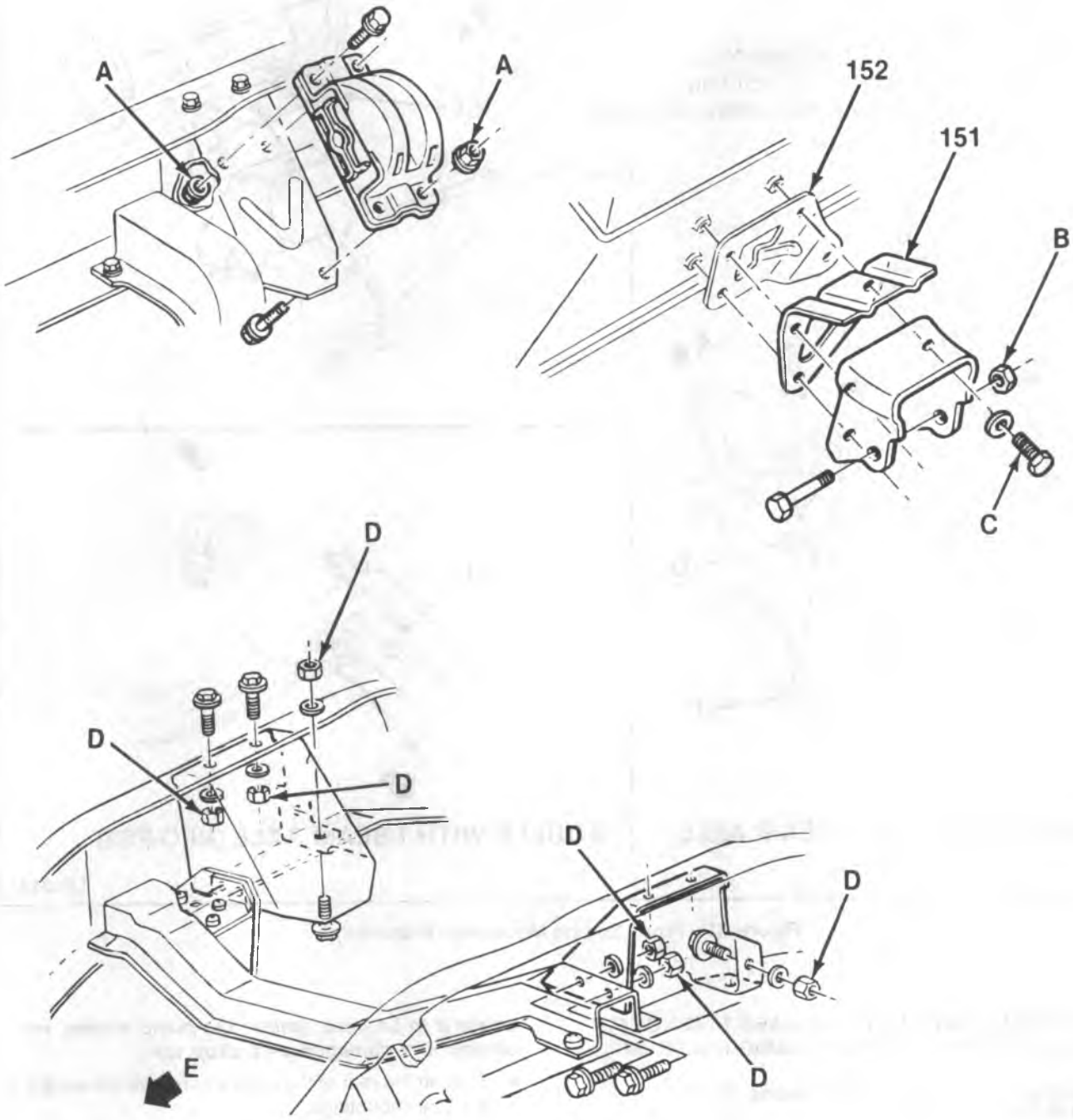

A. 40 N·m (30 Ft. Lbs.)
B. Torque Bolt To 115 N·m (85 Ft. Lbs.) Or, Torque Nut To 75 N·m (55 Ft. Lbs.)
C. 48 N·m (36 Ft. Lbs.)
D. 65 N·m (48 Ft. Lbs.)
E. Forward
151. Heat Shield (Engines With Federal Emissions – Left Side Only)
152. Transmission Strut Bracket (Automatic Transmission) Or Spacer (Manual Transmissions).

L01207

Figure 30 – Front Engine Mounting (V Models)

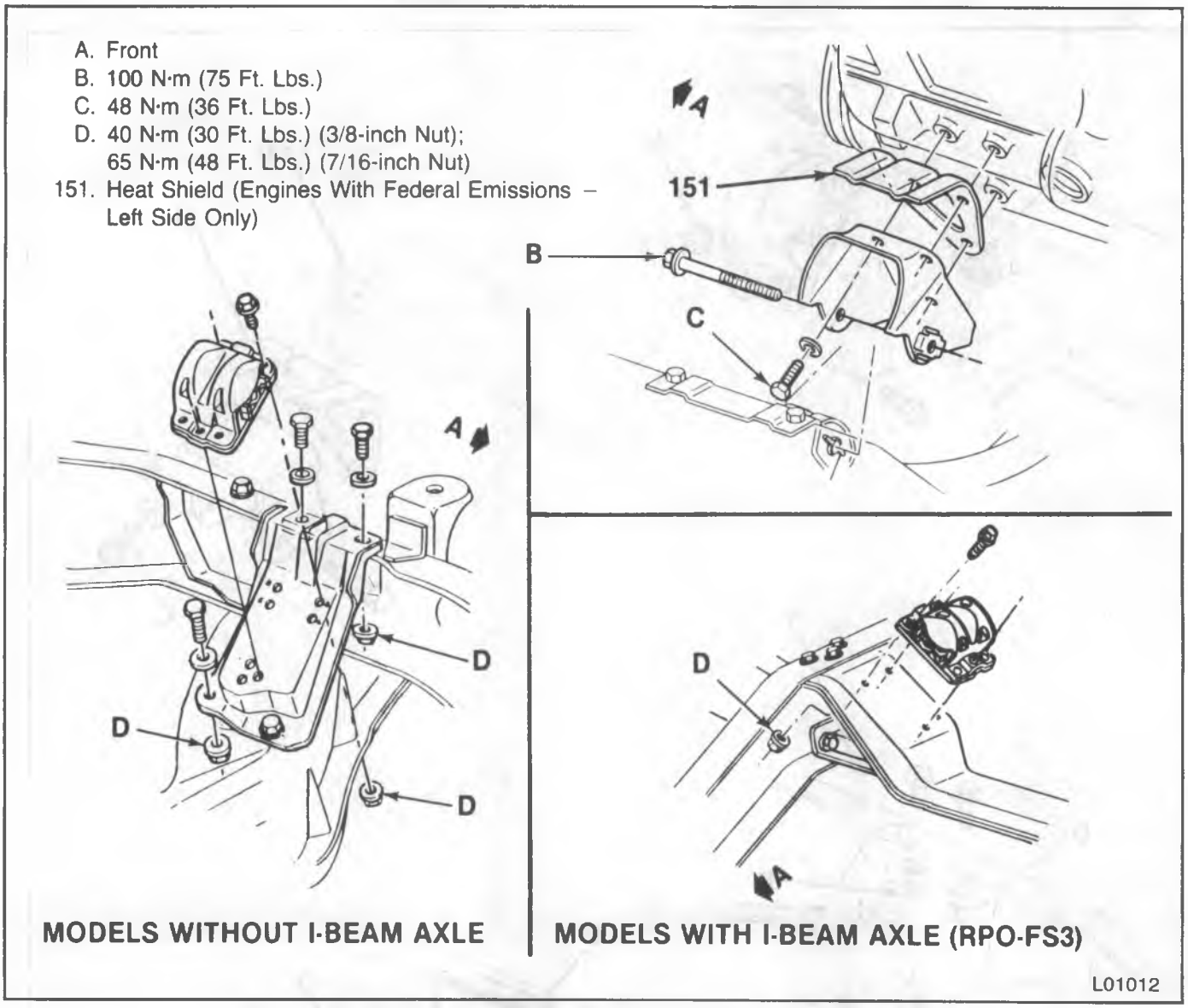

Figure 31 – Front Engine Mounting (P-Models)

REAR MOUNTING REPLACEMENT (EXCEPT P MODELS WITH FLYWHEEL HOUSING MOUNTING)

Remove or Disconnect (Figures 32, 33 and 34)

1. Battery negative cable.

NOTICE: When raising or supporting the engine for any reason, do not use a jack under the oil pan, any sheet metal or crankshaft pulley. Due to the small clearance between the oil pan and the oil pump screen, jacking against the oil pan may cause it to be bent against the pump screen, resulting in a damaged oil pickup unit.

- Support the rear of the engine to relieve the weight on the rear mountings.

2. Mounting to crossmember nut(s) and washer(s).
3. Mounting to transmission bolts and washers.

- Raise the rear of the engine only enough to permit removal of the mounting.

4. Mounting.

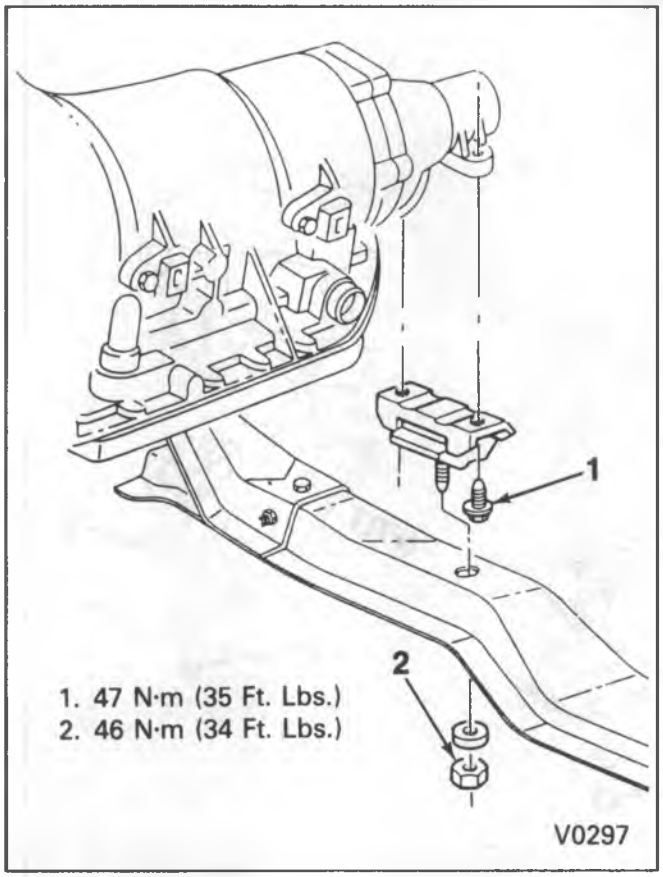

Figure 32 – Rear Engine Mountings (R Models)

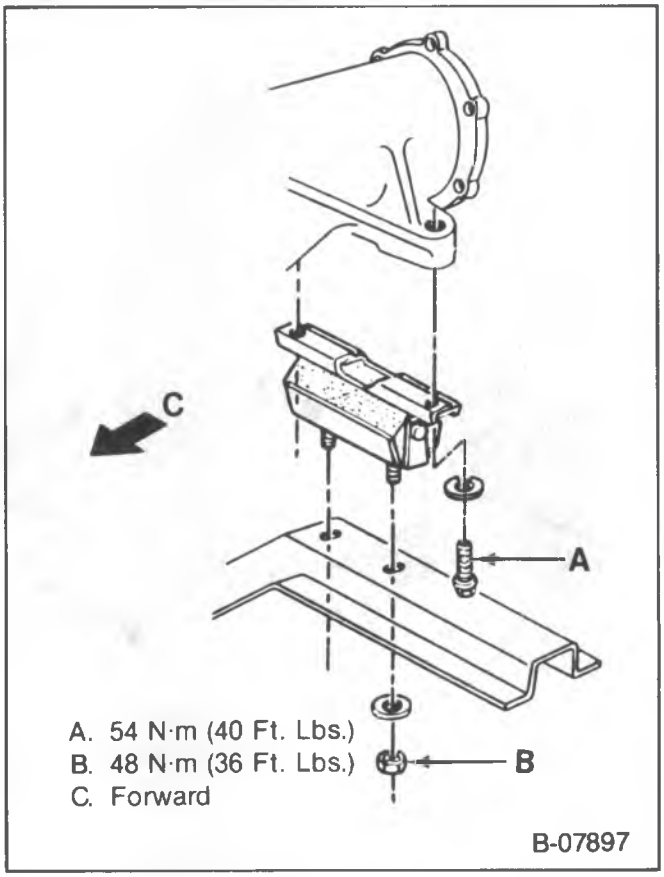

Figure 33 – Rear Engine Mounting (V Models)

Install or Connect (Figures 32, 33, 34 and 35)

1. Mounting.
   - Lower the rear of the engine.
2. Mounting to transmission bolts and washers.

NOTICE: See "Notice" on page 6A5-1 of this section.

3. Mounting to crossmember nut(s) and washer(s).

   Tighten

   - Fasteners to specifications. Refer to figures 29, 30 and 31.
4. Battery negative cable.

REAR MOUNTING REPLACEMENT (P MODELS WITH FLYWHEEL HOUSING MOUNTING)

Remove or Disconnect (Figure 35)

1. Battery negative cable.
2. Bolt, cushion, and spacer.

NOTICE: When raising or supporting the engine for any reason, do not use a jack under the oil pan, any sheet metal or crankshaft pulley. Due to the small clearance between the oil pan and the oil pump screw, jacking against the oil pan may cause it to be bent against the pump screw, resulting in a damaged oil pickup unit.

   - Raise the rear of the engine only enough to permit removal of the mounting.
3. Engine mounting.

Install or Connect (Figure 35)

1. Engine mounting. Align the hole in the mounting with the hole in the crossmember.
   - Lower the engine.

NOTICE: See "Notice" on page 6A5-1 of this section.

2. Spacer, cushion, and bolt.

   Tighten

   - Bolt to 90 N·m (65 ft. lbs.).
3. Battery negative cable.

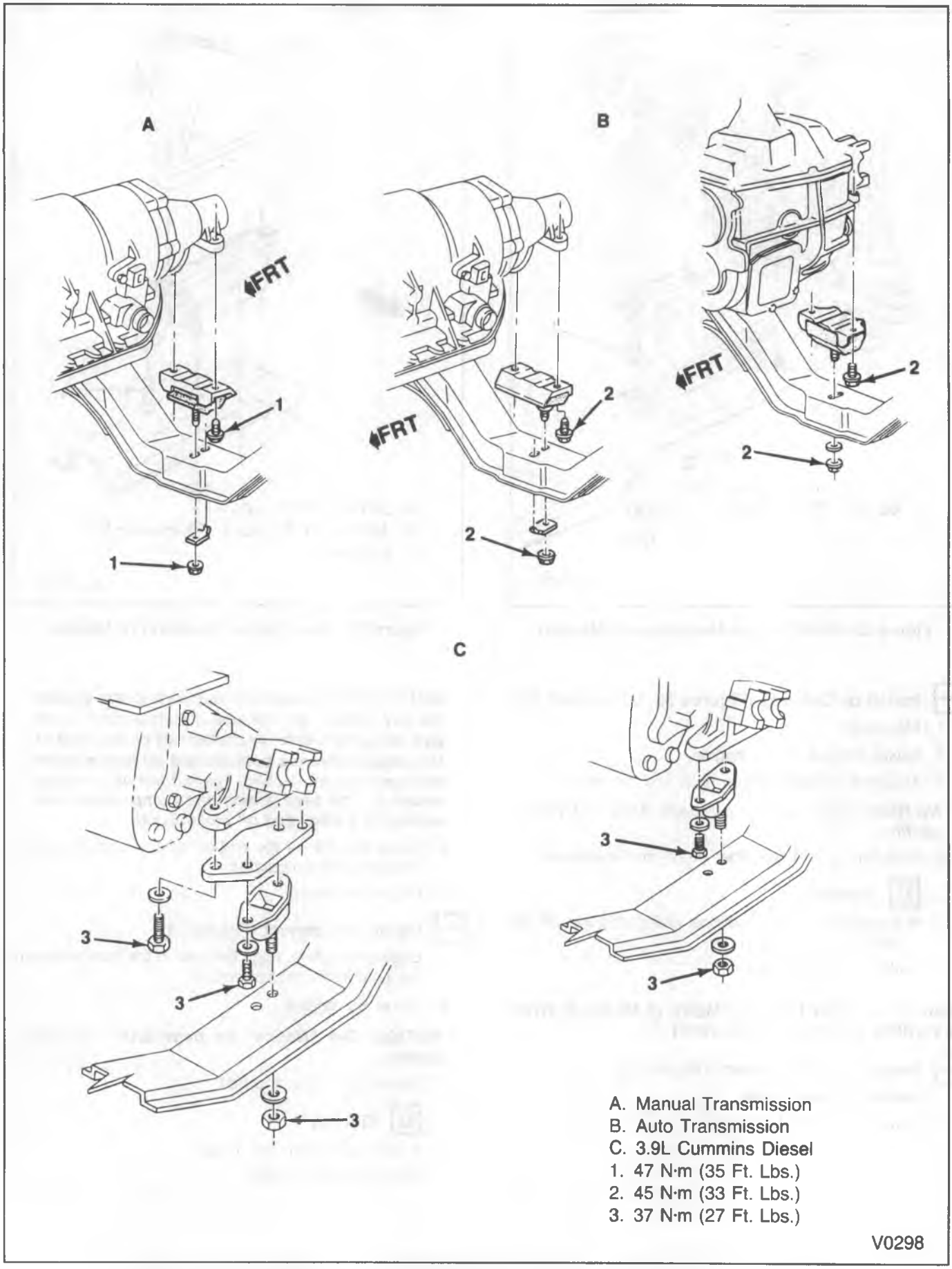

Figure 34 – Rear Engine Mounting (P Models with Transmission Tail Type Mounting)

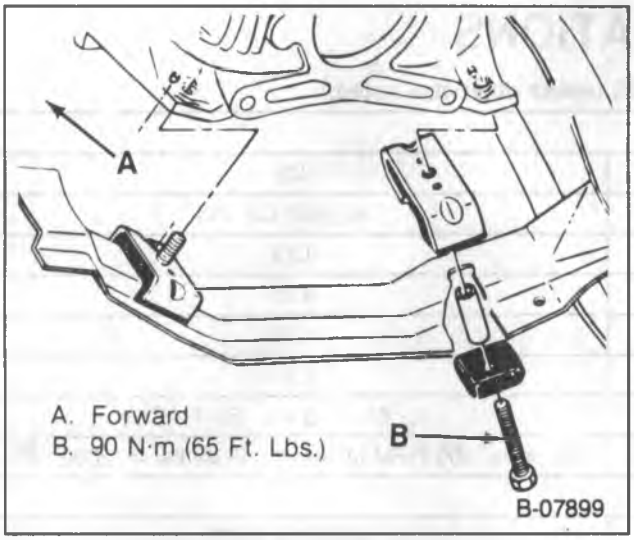

Figure 35—Rear Engine Mounting (P Models with Flywheel Housing Type Mounting)

ENGINE REPLACEMENT

R/V AND P MODELS

Remove or Disconnect (Figures 29 through 35)

1. Hood.
2. Battery negative cable.
3. Air cleaner.
4. Radiator and fan shroud. Refer to ENGINE COOLING (SEC. 6B).
5. Necessary engine wiring:
   - Starter and solenoid wires.
   - Generator wires.
   - Temperature sensor wire.
   - Oil pressure sender wire.
   - Distributor or coil wires.
   - Any other necessary wiring.
6. Accelerator, cruise control and TVS linkages, as equipped.
7. Fuel supply line.
8. Necessary vacuum hoses:
   - Evaporative emission hoses.
   - Vacuum booster hose (if used).
   - Cruise control hose (if used).
   - Any other necessary vacuum hoses.
9. Power steering pump, and lay aside.
10. Air conditioning compressor (if equipped), and lay aside.

- Raise the vehicle. Support with suitable safety stands.

11. Exhaust pipes at the manifolds.
12. Starter.
13. Flywheel or torque converter cover.
14. Flex plate to torque converter bolts (automatic transmission).
15. Clutch housing to engine bolts.
16. Front engine mounting through-bolts.
17. Oil cooler lines.

- Lower the vehicle.
- Support the transmission.
- Attach a suitable lifting fixture.

18. Engine.

Install or Connect (Figures 28 through 35)

1. Engine in the vehicle.

NOTICE: See "Notice" on page 6A5-1 of this section.

2. Engine mounting through-bolts and nuts.

Tighten

- Fasteners to specifications. Refer to figures 29, 30 and 31.

- Raise the vehicle. Support with suitable safety stands.

3. Clutch housing bolts.

- Remove the lifting fixture and transmission jack.

4. Flex plate to torque converter bolts (automatic transmission). Refer to TRANSMISSION AND CLUTCH (SEC. 7A).
5. Flywheel or torque converter cover.
6. Starter.

- Oil cooler lines.

7. Exhaust pipes at the manifolds. Refer to EXHAUST (SEC. 6F).

- Lower vehicle.

8. Air conditioning compressor. Refer to AIR CONDITIONING (SEC. 1B).
9. Power steering pump. Refer to POWER STEERING (SEC. 3B1).
10. Vacuum hoses.
11. Fuel supply line.
12. Accelerator, cruise control, and TVS linkages, as equipped.
13. Engine wiring.
14. Radiator and fan shroud: Refer to ENGINE COOLING (SEC. 6B).
15. Air cleaner.
16. Hood.
17. Battery negative cable.
18. Proper quantity and grade of coolant and oil. Refer to MAINTENANCE AND LUBRICATION (SEC. 0B).

SPECIFICATIONS

All Specifications are in INCHES unless otherwise noted.

GENERAL DATA:				
Type				V8
Displacement				7.4L (454 Cu. In.)
RPO				L19
Bore				4.25
Stroke				4.00
Compression Ratio				7.9:1
Firing Order				1 - 8 - 4 - 3 - 6 - 5 - 7 - 2
Oil Pressure				10 psi @ 500 RPM Minimum; 40-60 psi @ 2000 RPM
CYLINDER BORE:				
Diameter				4.2500-4.2507
Out Of Round	Production			0.001 (Maximum)
	Service			0.002 (Maximum)
Taper	Production	Thrust Side		0.0005 (Maximum)
		Relief Side		0.001 (Maximum)
	Service			0.001 (Maximum)
PISTON:				
Clearance	Production			0.0030-0.0042
	Service Limit			0.005 (Maximum)
PISTON RING:				
COMPRESSION	Groove Clearance	Production	Top	0.0012-0.0029
			2nd	0.0012-0.0029
		Service Limit		Hi Limit Production + 0.001
	Gap	Production	Top	0.010-0.018
			2nd	0.016-0.024
		Service Limit		Hi Limit Production + 0.010
OIL	Groove Clearance	Production		0.0050-0.0065
		Service Limit		Hi Limit Production + 0.001
	Gap	Production		0.010-0.030
		Service Limit		Hi Production + 0.010
PISTON PIN:				
Diameter				0.98945-0.98965
Clearance In Piston	Production			0.0002-0.0007
	Service Limit			0.001 (Maximum)
Fit In Rod				0.0013-0.0021 Interference

GMTB-3203-2A

SPECIFICATIONS (CONT.)

All specifications are in INCHES unless otherwise noted.

DISPLACEMENT:			7.4L
CRANKSHAFT:			
Main Journal	Diameter	#1, #2, #3, #4, #5	2.7482-2.7489
	Taper	Production	0.0002 (Maximum)
		Service Limit	0.001 (Maximum)
	Out Of Round	Production	0.0002 (Maximum)
		Service Limit	0.001 (Maximum)
Main Bearing Clearance	Production	#1, #2, #3, #4	0.0017-0.0030
		#5	0.0025-0.0038
	Service Limit	#1, #2, #3, #4	0.0010-0.0030
		#5	0.0025-0.0040
Crankshaft End Play			0.006-0.010
Crankpin	Diameter		2.1990-2.1996
	Taper	Production	0.0005
		Service Limit	0.001
	Out of Round	Production	0.0005
		Service Limit	0.001
Rod Bearing Clearance	Production		0.0011-0.0029
	Service Limit		0.003 (Maximum)
Rod Side Clearance			0.0013-0.023
CAMSHAFT:			
Lobe Lift ± 0.002	Intake		0.2343
	Exhaust		0.2530
Journal Diameter			1.9482-1.9492
VALVE SYSTEM:			
Lifter			Hydraulic
Rocker Arm Ratio			1.70:1
Valve Lash		Intake	NET LASH
		Exhaust	
Face Angle (Intake & Exhaust)			45°
Seat Angle (Intake & Exhaust)			46°
Seat Runout (Intake & Exhaust)			0.002 (Maximum)
Seat Width		Intake	1/32-1/16
		Exhaust	1/16-3/32
Stem Clearance	Production	Intake	0.0010-0.0027
		Exhaust	0.0012-0.0029
	Service	Intake	High Limit Production +0.001
		Exhaust	High Limit Production +0.002
Valve Spring	Free Length		2.12
	Pressure lbs. @ in.	Closed	74-86 lbs. @ 1.80 in.
		Open	195-215 lbs. @ 1.40 in.
	Installed Height ± 1/32"		1 51/64 (1.80 in.)
	Valve Spring Fit In Damper		0.042-0.094 Interference

GMTB-3204-2A

SPECIFICATIONS (CONT.)

FASTENER TORQUE

Item	N·m	Ft. Lbs.	In. Lbs.
Rocker Arm Cover Bolts	7	—	60
Intake Manifold Bolts	40	30	—
Rocker Arm Bolts	54	40	—
Exhaust Manifold Bolts	54	40	—
Cylinder Head Bolts	110	81	—
Torsional Damper Bolts	115	85	—
Front Cover to Block Bolts	11	—	100
Oil Pan to Front Cover Bolts	7	—	70
Oil Pan to Block Bolts	18	—	160
Oil Pump Bolt	90	65	—
Main Bearing Caps	135	100	—
Camshaft Sprocket Bolts	27	20	—
Connecting Rod Cap Nuts	66	48	—
Flywheel Bolts	90	65	—
Oil Pump Cover Bolts	9	—	80
Flywheel Housing Bolts	40	30	—
Coolant Pump Bolts	40	30	—
Coolant Outlet Bolts	40	30	—
Spark Plugs	30	22	—
Oil Pan Drain Plug	22	16	—
Block Drain Plug	27	20	—

GMTB-3135-2A

SPECIAL TOOLS

1. J 23523-E

2. J 5892-C

3. J 23590

4. 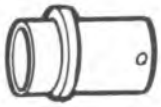 J 22102

5. J 8080

6. J 8037

7. J 5239

8. J 9290-01

9. J 3049-A

10. J 28509-A

11. J 8520

12. 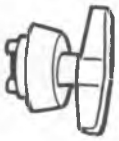 J 38841

1. Torsional Damper Remover And Installer
2. Valve Spring Compressor
3. Air Adapter
4. Crankshaft Seal Installer And Centering Tool
5. Main Bearing Replacer
6. Piston Ring Compressor
7. Guide Set
8. Hydraulic Lifter Remover (Slide Hammer Type)
9. Hydraulic Lifter Remover (Plier Type)
10. Crankshaft Sprocket Puller
11. Dial Indicator Adapter
12. Crankshaft Rear Seal Installer

V0556

SECTION 6A6

6.2L DIESEL

NOTICE: When fasteners are removed, always reinstall them at the same location from which they were removed. If a fastener needs to be replaced, use the correct part number fastener for that application. If the correct part number fastener is not available, a fastener of equal size and strength (or stronger) may be used. Fasteners that are not reused, and those requiring thread locking compound will be called out. The correct torque value must be used when installing fasteners that require it. If the above conditions are not followed, parts or system damage could result.

CONTENTS

SUBJECT	PAGE
Description	6A6- 1
Engine Lubrication	6A6- 1
On-Vehicle Service	6A6- 2
Intake Manifold Replacement	6A6- 2
Exhaust Manifold Replacement	6A6- 3
Rocker Arm Cover Replacement	6A6- 4
Rocker Arm, Shaft and Pushrod Replacement	6A6- 5
Hydraulic Lifter Replacement	6A6- 6
Valve Stem Seal and Valve Spring Replacement	6A6- 7
Cylinder Head Replacement	6A6- 8
Oil Pump Drive Replacement	6A6-10
Torsional Damper and Front Crankshaft Seal Replacement	6A6-10
Front Cover Replacement	6A6-11
Timing Chain and Sprocket Replacement	6A6-13
Camshaft Replacement	6A6-13
Dipstick Tube Replacement	6A6-14
Oil Pan Replacement (R/V Models)	6A6-15
Oil Pump Replacement (R/V Models)	6A6-16
Rear Crankshaft Oil Seal Replacement	6A6-17
Connecting Rod and Piston Replacement	6A6-18
Main Bearing Replacement	6A6-20
Crankshaft Replacement	6A6-21
Oil Filter Bypass Valve Replacement	6A6-21
Engine Mountings	6A6-22
Engine Replacement	6A6-28
Flywheel Replacement (Manual and Automatic Transmissions)	6A6-29
Specifications	6A6-30
Special Tools	6A6-33

DESCRIPTION

6.2L diesels are 90 degree V8 engines with natural aspiration and indirect type combustion chambers.

The crankshaft is supported by five precision insert main bearings, with crankshaft thrust taken at the number three (center) main bearing.

The camshaft is supported by five plain type bearings and is chain driven. Motion from the camshaft is transmitted to the overhead valves by roller type hydraulic lifters, pushrods, and shaft mounted rocker arms. The valve guides are integral in the cylinder head.

The connecting rods are forged steel, with precision insert type crankshaft bearings. The piston pins are retained by snap rings.

ENGINE LUBRICATION

A lubrication schematic is shown in figure 1.

The gear type oil pump is driven from either the vacuum pump shaft or from a drive gear, depending on engine application. The vacuum pump or drive gear is driven by the camshaft. Oil is drawn into the pump through a pickup screen and pipe.

Pressurized oil is routed to the oil cooler, located in the radiator. A bypass valve is provided should oil cooler become restricted. Oil flows from the cooler to a full flow oil filter. An oil filter bypass valve is provided should the oil filter become restricted.

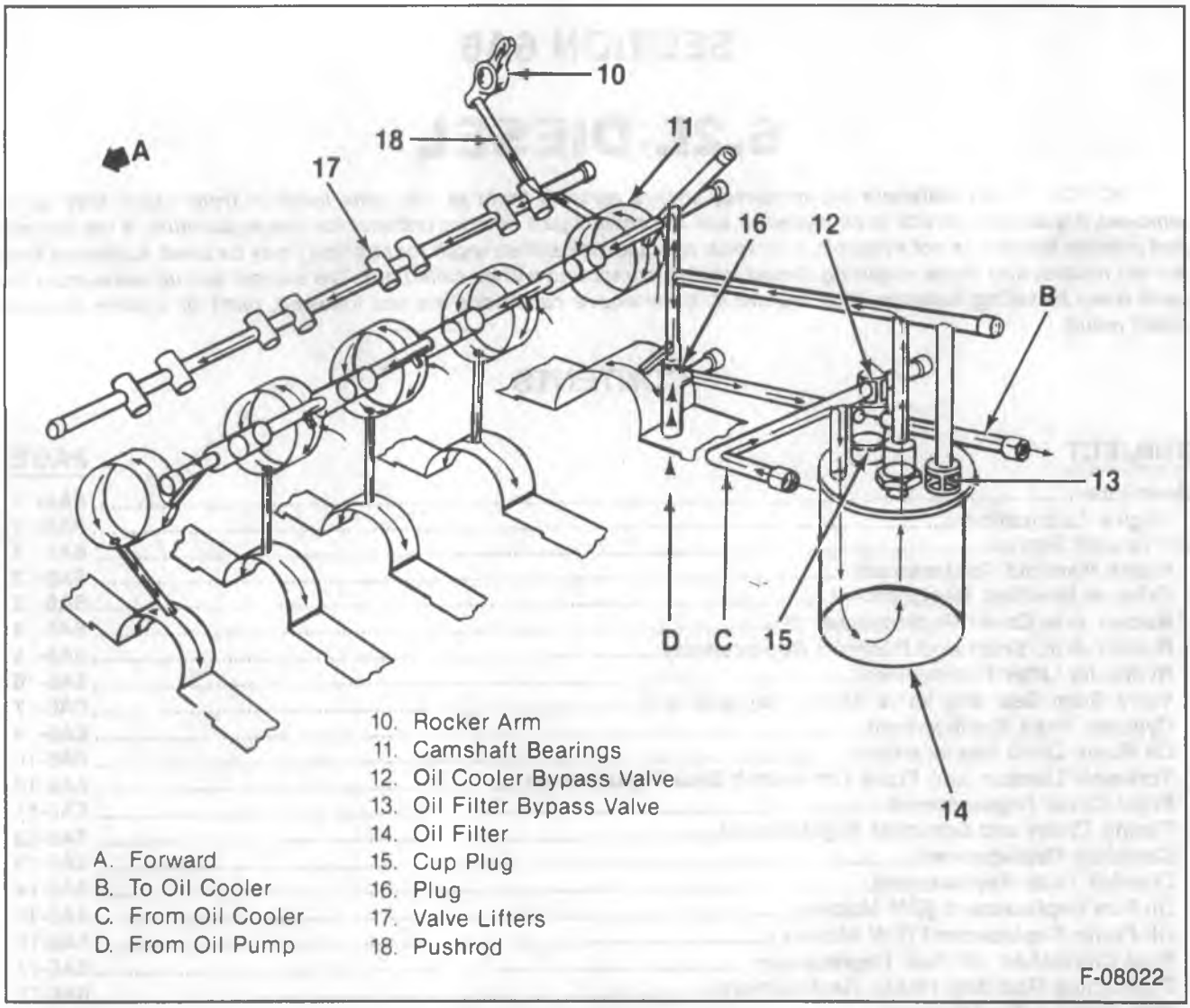

Figure 1—Lubrication Diagram

Oil flows from the filter to the oil galleries, providing pressurized lubrication to various components.

The hydraulic valve lifters receive oil from the oil galleries. Oil flows from the hydraulic lifters through hollow pushrods to the rocker arms. Oil from the overhead drains back to the crankcase through oil drain holes.

The pistons, piston rings, cylinder walls, and connecting rod small end bearing are lubricated by oil splash.

ON-VEHICLE SERVICE

INTAKE MANIFOLD REPLACEMENT

Remove or Disconnect (Figure 2)

Tool Required:

J 29664 Manifold Cover Set

1. Battery cables.
2. Air cleaner.
3. Ground strap at right rear of intake.
4. EGR and crankcase ventilation hoses.
5. Air conditioning compressor rear bracket (if equipped).
6. Battery ground cable.
7. Intake manifold bolts and fuel line clips. On models with gear driven vacuum pumps, it may be necessary to loosen the vacuum pump clamp bolt and turn the pump to provide access to an intake manifold bolt.
8. Intake manifold and gasket.

Important

- If any further service work is to be done, cover the intake ports with J 29664 (figure 2).

Clean

- Gasket surfaces on intake manifold and cylinder heads.

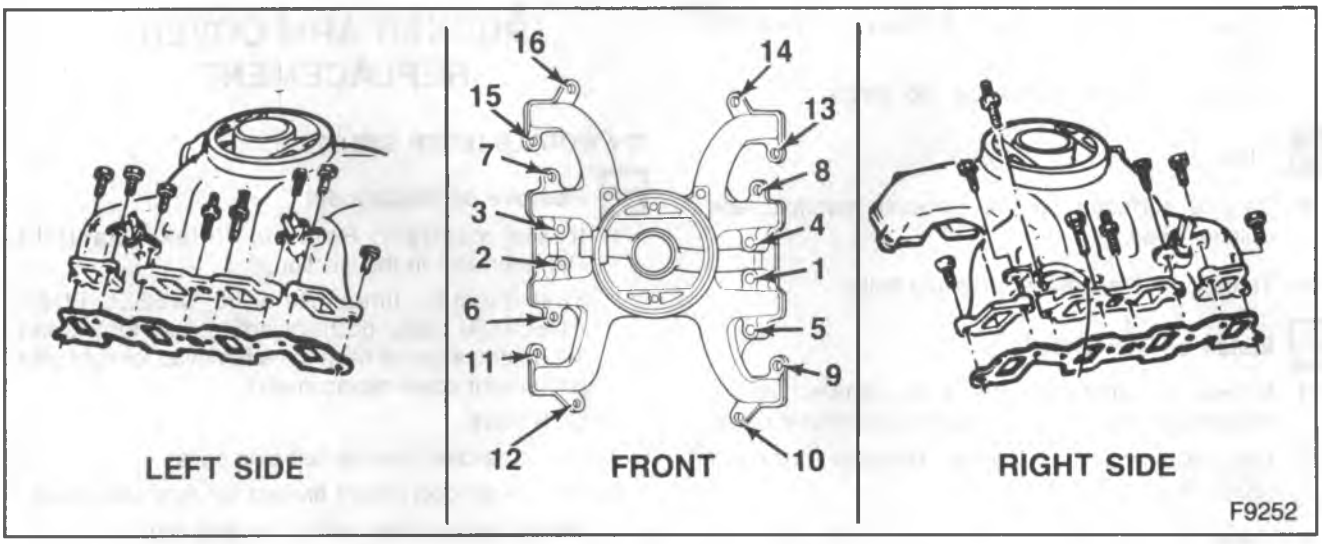

Figure 2—Intake Manifold

Install or Connect (Figure 3)

1. New gaskets. Be sure to use the correct gasket. The gaskets for light duty emissions models have openings for the EGR ports; the gaskets for heavy duty emissions models do not.
2. Intake manifold.

NOTICE: See "Notice" on page 6A6-1 of this section.

3. Intake manifold bolts and fuel line clips.

Tighten

- Intake manifold bolts to 42 N•m (32 ft. lbs.). Use tightening sequence shown in figure 3.

- Rotate the vacuum pump to the proper position and tighten the clamp bolt (on models with gear driven vacuum pumps).

4. Fuel line bracket and ground strap.
5. Air conditioning compressor rear bracket (if equipped).
6. EGR and crankcase ventilation hoses.
7. Upper generator bracket. Refer to CHARGING SYSTEM (SEC. 6D3).
8. Air cleaner.
9. Battery cables.

EXHAUST MANIFOLD REPLACEMENT

R/V MODELS (RIGHT SIDE)

Remove or Disconnect

1. Battery cables.

- Raise the vehicle. Support with suitable safety stands.

2. Exhaust pipe from the manifold. Refer to EXHAUST (SEC. 6F).

- Lower the vehicle.

3. Glow plug wires.
4. Air cleaner duct bracket.
5. Glow plugs.
6. Exhaust manifold bolts and exhaust manifold.

Clean

- Sealing surfaces on exhaust manifold and cylinder head.
- Threads on manifold bolts.

Install or Connect

NOTICE: See "Notice" on page 6A6-1 of this section.

1. Exhaust manifold and bolts.

Tighten

- Bolts to 35 N•m (26 ft. lbs.).

2. Glow plugs.
3. Air cleaner duct bracket.
4. Glow plug wires.

- Raise the vehicle. Support with suitable safety stands.

5. Exhaust pipe to the manifold. Refer to EXHAUST (SEC. 6F).

- Lower the vehicle.

6. Battery cables.

R/V MODELS (LEFT SIDE)

Remove or Disconnect

1. Battery cables.
2. Dipstick tube.
3. Glow plugs.
4. Air conditioning compressor rear bracket (if equipped).
5. Exhaust manifold bolts.

- Raise the vehicle. Support with suitable safety stands.

6. Exhaust pipe at the manifold. Refer to EXHAUST (SEC. 6F).
7. Exhaust manifold, from below the vehicle.

Clean

- Sealing surfaces on the exhaust manifold and cylinder head.
- Threads on the exhaust manifold bolts.

Install or Connect

1. Exhaust manifold, from below the vehicle. Loosely install two or three bolts to hold the manifold in place.
2. Exhaust pipe to the manifold. Refer to EXHAUST (SEC. 6F).

- Lower the vehicle.

NOTICE: See "Notice" on page 6A6-1 of this section.

3. Remaining exhaust manifold bolts and air conditioning compressor rear bracket (if equipped).

Tighten

- Bolts to 35 N•m (26 ft. lbs.).

4. Glow plugs.
5. Dipstick tube.
6. Battery cables.

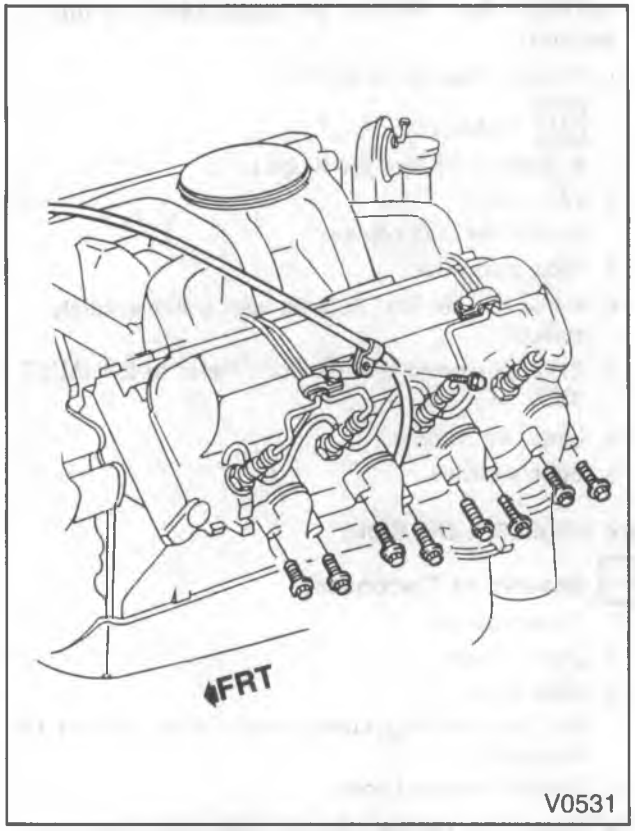

Figure 3—Exhaust Manifold

ROCKER ARM COVER REPLACEMENT

R/V MODELS (BOTH SIDES)

Remove or Disconnect

1. Intake manifold. Refer to "Intake Manifold Replacement" in this section.
2. Fuel injection lines. Refer to DIESEL FUEL INJECTION (SEC. 6C2). (Injection lines for #5 and #7 cylinders do not have to be removed for right side rocker arm cover replacement).
3. CDR valve.
4. Fuel crossover line clip left side cover.
5. Air cleaner duct mount bracket for right side cover.
6. Wiring harness from wiring harness clip.
7. Wiring harness bracket (left rocker arm cover).
8. Rocker arm cover bolts.

NOTICE: Do not pry on the rocker arm cover. Damage to sealing surfaces may result.

9. Rocker arm cover.

Clean

1. RTV from the rocker arm cover and cylinder head. All loose RTV, or pieces that will cause installation interference, must be removed.
2. Oil and grease from the sealing surfaces on the rocker arm cover and cylinder head. Use a suitable solvent.

Inspect

- Rocker arm cover sealing flanges for distortion. Replace as necessary.

Install or Connect (Figure 4)

NOTICE: Do not allow RTV sealant into the rocker arm cover bolt holes. This may cause a "hydraulic lock" condition when the bolts are tightened, damaging the cylinder head casting.

- Apply a 5 mm (3/16-inch) bead of RTV sealant (GM part number 1052915 or equivalent) to the cylinder head, inboard of the bolt holes. Refer to figure 4. The sealant must be wet to the touch when the bolts are torqued.

1. Rocker arm cover.

NOTICE: See "Notice" on page 6A6-1 of this section.

2. Rocker arm cover bolts.

Tighten

- Bolts to 22 N•m (16 ft. lbs.).

3. Wiring harness bracket.
4. Wiring harness to the wiring harness clip.
5. CDR valve.
6. Fuel injection lines. Refer to DIESEL FUEL INJECTION (SEC. 6C2).

7. Intake manifold. Refer to "Intake Manifold Replacement" in this section.
8. Fuel crossover line clip left side cover.

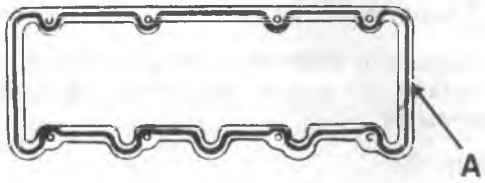

A. RTV Sealant

B-08024

Figure 4—Applying Sealant to the Rocker Arm Cover

ROCKER ARM, SHAFT, AND PUSHROD REPLACEMENT

Remove or Disconnect (Figures 5 and 6)

1. Rocker arm cover. Refer to "Rocker Arm Cover Replacement" in this section.
2. Rocker arm shaft bolts.
3. Rocker arm shaft with rocker arms. Mark the assemblies so they can be returned to their original locations.
4. Pushrods.

Important

- The pushrods must be installed in the original direction at assembly. This is because the pushrods have a different degree of hardness at each end. A paint stripe identifies the upper end of the pushrod. If the paint stripe is not visible, mark the pushrods on the upper end as they are removed.
- The pushrods should be installed in the same location at assembly.

5. Rocker arms, if required.
   - Insert a screwdriver into the rocker arm shaft bore, and break off the end of the nylon rocker arm retainers.
   - Remove the rocker arm retainers with pliers (figure 6).
   - Slide the rocker arms from the shaft.

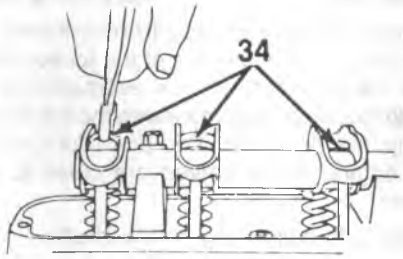

34. Rocker Arm Retainers

B-08026

Figure 6—Removing the Rocker Arm Retainers

Install or Connect (Figures 5 and 7)

1. Rocker arms to the rocker arm shaft. One type of rocker arm is used at all locations.

Important

- Lubricate the rocker arms with engine oil before installing.

2. New rocker arm retainers.
   - Center the rocker arms on the corresponding holes in the rocker arm shaft.
   - Use a drift of at least 13 mm (1/2-inch) diameter.

NOTICE: The pushrods must be installed with the marked or painted end up. Failure to do so may result in damage or premature wear.

30. Bolt
31. Rocker Arm Assembly
32. Clamp
33. Guide Plate
35. Hydraulic Lifter
36. Pushrod

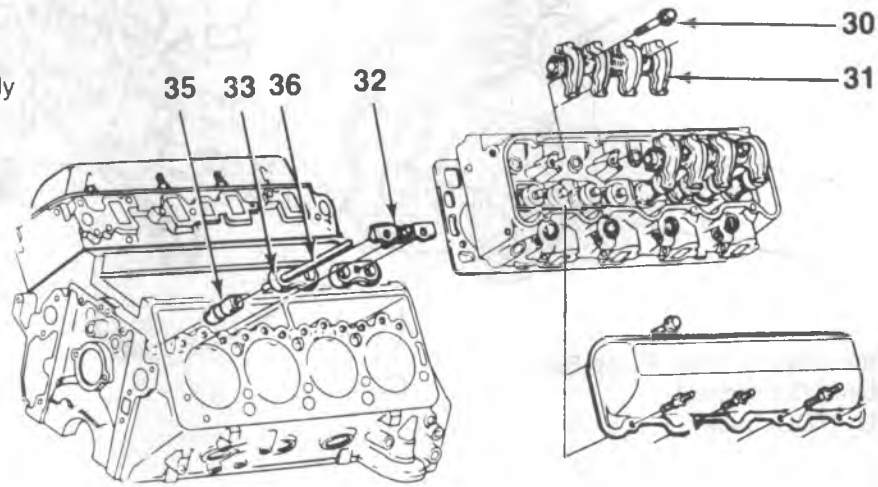

B-08025

Figure 5—Valve Train Components

3. Pushrods, with the painted or marked end up.
4. Rocker arm shaft assembly. Make sure the ball ends of the pushrods seat in the rocker arms.

NOTICE: Improper installation of the rocker arm shaft bolts may cause rocker arm shaft breakage and/or piston-to-valve contact.

NOTICE: See "Notice" on page 6A6-1 of this section.

5. Rocker arm shaft bolts.
   - Rotate the engine until the mark on the torsional damper aligns with the "0" mark on the timing tab.
   - Rotate the engine counterclockwise 88 mm (3 1/2-inches), measured at the torsional damper. This measurement can be estimated by aligning the torsional damper mark with the first lower water pump bolt (figure 7). This procedure will position the engine so no valves are close to a piston crown.
   - Install both bolts snug on the shaft.

Tighten

- Bolts alternately to 55 N•m (40 ft. lbs.).

6. Rocker arm cover. Refer to "Rocker Arm Cover Replacement" in this section.

HYDRAULIC LIFTER REPLACEMENT

Remove or Disconnect (Figures 5 and 8)

Tools Required:

J 29834 Hydraulic Lifter Remover

1. Rocker arm covers. Refer to "Rocker Arm Cover Replacement" in this section.
2. Rocker arm shaft with rocker arms and pushrods. Refer to "Rocker Arm, Shaft, and Pushrod Replacement" in this section.

Important

- Rocker arm assemblies and pushrods must be marked for proper assembly, as outlined previously.

3. Clamps (32).
4. Guide plates (33). use mechanical fingers, if necessary.
5. Hydraulic lifters using J 29834. Place the lifters in an organizer rack. The lifters must be installed in the same bore from which they were removed.

Inspect

- Hydraulic lifter body for scuffing and scoring. Replace the lifter if present.
- Roller for looseness and excessive play. Check for missing or broken needle bearings. Replace if necessary.
- Roller surface for pits and roughness. If present, the mating camshaft lobe should also be checked. If the lobe is pitted or rough, replace both camshaft and lifter.

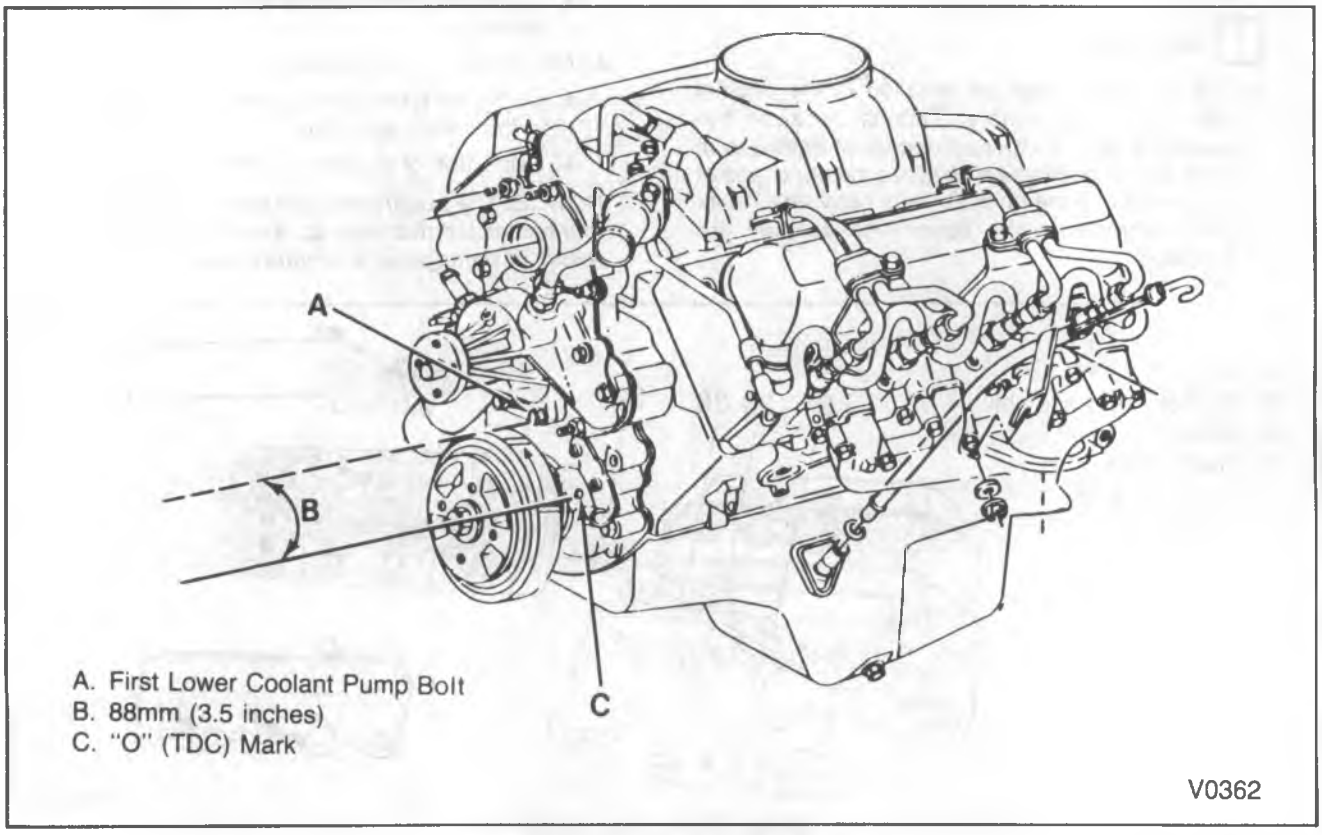

Figure 7—Aligning the Timing Mark

Hydraulic Lifter Repair

- Refer to the 1991 Light Duty Truck Unit Repair Manual.

Important

- Some engines will have both standard and 0.010-inch oversize hydraulic lifters. The oversize lifter will have a "10" etched on the side. The block will be stamped "O.S." on the cast pad adjacent to the lifter bore and on the top rail of the cylinder case above lifter bore.

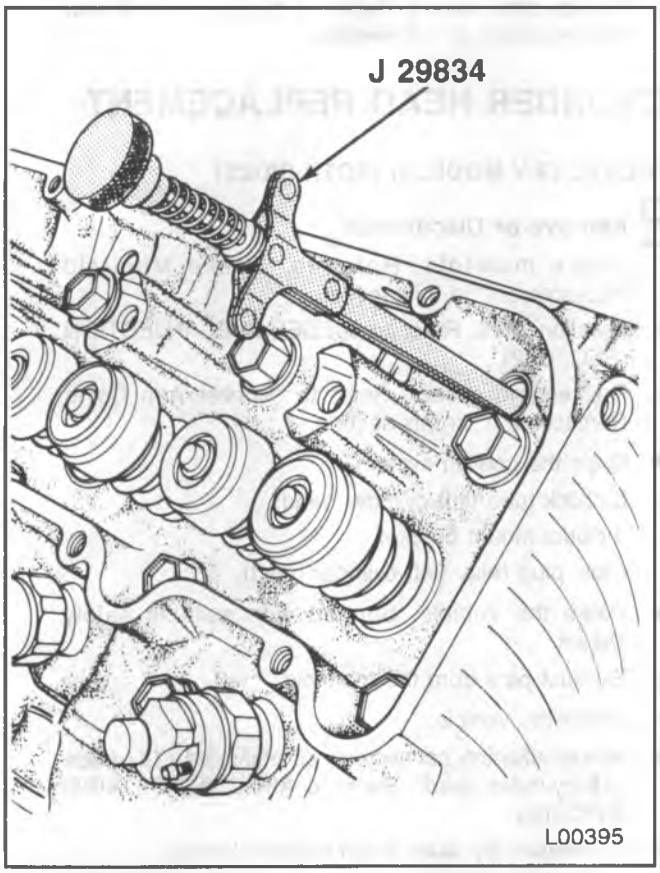

Figure 8—Removing the Hydraulic Lifter

Install or Connect (Figure 5)

NOTICE: New hydraulic lifters must be primed before installation. Damage to the lifters may result if they are dry when the engine is started.

1. Hydraulic lifters to the engine. Fabricate an installation tool from mechanic's wire.

Important

- Prime new hydraulic lifters before installation by working the lifter plunger while submerged in clean kerosene or diesel fuel.
- Coat the lifter roller and bearings with lubricant (GM part number 1052365 or equivalent).
- Lifters MUST be installed in their original locations.

2. Guide plates (33).

NOTICE: See "Notice" on page 6A6-1 of this section.

3. Clamps (32).

Tighten

- Clamp bolt to 26 N•m (18 ft. lbs.).

Important

- After all clamps are installed, turn the crankshaft by hand 720 degrees (two full turns), to ensure free movement of the lifters in the guide plates. If the engine will not turn over by hand, one or more of the lifters may be binding in the guide plate.

4. Rocker arm shaft with rocker arms and pushrods, in their original locations. Refer to "Rocker Arm, Shaft, and Pushrod Replacement" in this section. Hardened ends of the pushrods must face up.
5. Rocker arm covers. Refer to "Rocker Arm Cover Replacement" in this section.

VALVE STEM SEAL AND VALVE SPRING REPLACEMENT

Remove or Disconnect (Figures 9 and 10)

Tool Required:

J 38606 Valve Spring Compressor
J 26999-10 Adapter

1. Rocker arm covers. Refer to "Rocker Arm Cover Replacement" in this section.
2. Rocker arm shaft with rocker arms. Refer to "Rocker Arm, Shaft, and Pushrod Replacement" in this section.
3. Glow plugs.
4. Valve keepers.
   - Rotate the engine until the piston for the cylinder being serviced is at TDC.
   - Install an air line adapter J 26999-10 into the glow plug hole.
   - Apply compressed air to hold the valves in place.
   - Use J 38606 to compress the valve spring (figure 10). If the spring will not compress, tap on the tool lightly with a mallet to break the cap or rotate loose from the valve keepers.
   - Remove the valve keepers.
   - Carefully release spring tension. Remove J 38606.
5. Cap or rotator, shield, and spring with damper.
6. Valve seal(s).

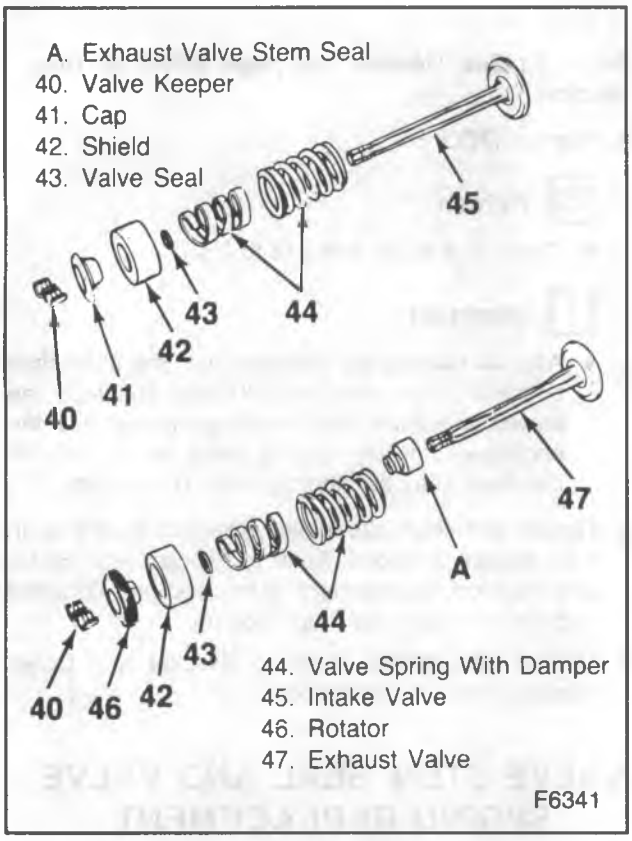

Figure 9—Valves and Components

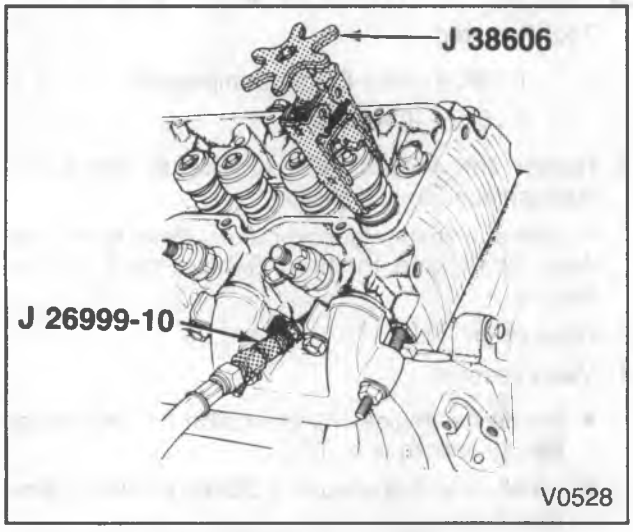

Figure 10—Compressing the Valve Spring

Install or Connect (Figures 9 and 10)

Tool Required:

J 38606 Valve Spring Compressor
J 26999-10 Adapter

1. New valve seal.
2. Valve spring with damper, shield, and cap or rotator.
3. Valve keepers.
   - Install J 26999-10 Air Line Adapter into glow plug hole.
   - Applying air pressure to the cylinder being serviced, compress the valve spring with J38606 (figure 10).
   - Install the valve keepers. Use grease to hold them in place.
   - Carefully release spring pressure. Make sure the valve keepers remain in place.
   - Remove J 38606 and the air line adapter J 26999-10.
4. Glow plugs.
5. Rocker arm shaft with rocker arms. Refer to "Rocker Arm, Shaft, and Pushrod Replacement" in this section.
6. Rocker arm covers. Refer to "Rocker Arm Cover Replacement" in this section.

CYLINDER HEAD REPLACEMENT

REMOVAL (R/V MODELS) (BOTH SIDES)

Remove or Disconnect

1. Intake manifold. Refer to "Intake Manifold Replacement" in this section.
2. Injection lines. Refer to DIESEL FUEL INJECTION (SEC. 6C2).
3. Rocker arm covers. Refer to "Rocker Arm Cover Replacement" in this section.
   - Drain the cooling system.
4. Dipstick tube (left cylinder head).
5. Air duct mount bracket.
6. Glow plug relay (left cylinder head).
   - Raise the vehicle. Support with suitable safety stands.
7. Exhaust pipe from the manifold.
   - Lower the vehicle.
8. Air conditioning compressor (if equipped); lay aside (left cylinder head). Refer to AIR CONDITIONING (SEC. 1B).
9. Generator; lay aside (right cylinder head).
10. Glow plug wires.
11. Rocker arm assemblies and pushrods. Refer to "Rocker Arm, Shaft, and Pushrod Replacement" in this section.

Important

- Rocker arm assemblies and pushrods must be marked for proper assembly, as outlined previously.

12. Radiator, bypass and heater hoses. From crossover pipe.
13. Power steering pump reservoir. Remove reservoir with hose.
14. Power steering pump (lay-aside). Refer to POWER STEERING (SEC. 3B1).
15. Coolant crossover pipe/thermostat housing assembly.

16. Cylinder head bolts. Rear bolt in left cylinder head may have to remain in the head during removal.
17. Cylinder head.
    - Exhaust manifold from cylinder head if head is to be serviced or replaced.

CLEANING AND INSPECTION

Clean

- Carbon deposits from combustion chambers.
- All traces of old head gasket from cylinder head and block. Use of a motorized wire brush is not recommended.
- Cylinder head bolt threads using a wire brush.
- Metal chips and dirt from the threads in the block.

Inspect

- Cylinder head for cracks between the intake and exhaust ports. Use the magnaflux or dye method if available.
- Sealing surfaces of the block and cylinder head for nicks, heavy scratches, or other damage.
- Block for missing or damaged dowel pins, or dowel pins in the wrong location.

Measure

- Cylinder head warpage. If warped more than 0.15 mm (0.006-inch) longitudinally or 0.08 mm (0.003-inch) transversely, replace the cylinder head. Resurfacing is not recommended.
- Pre-chamber installed depth. The pre-chamber should be flush to a maximum of 0.05 mm (0.002-inch) protrusion.)
    - Make the measurement at two or more points on the pre-chamber where the pre-chamber seats on the head gasket shield and sealing ring.
    - Measure the difference between the flat of the pre-chamber and the flat surface of the cylinder head.
    - The pre-chamber must not protrude out of the cylinder head more than 0.05 mm (0.002-inch).
    - The pre-chamber must not be recessed into the cylinder head.

CYLINDER HEAD REPAIR

- Refer to the 1991 Light Duty Truck Unit Repair Manual.

INSTALLATION (R/V MODELS) (BOTH SIDES)

Install or Connect (Figure 11)

NOTICE: For steps 4 and 5 see "Notice" on page 6A6-1 of this section.

1. Head gasket to the block, over the dowel pins.

    Important
    - The block gasket surfaces must be clean.
    - DO NOT use a sealer on the head gasket. The head gasket is manufactured with the proper amount of sealant "printed" on its surface. Additional sealer may cause leakage or malfunction. In addition, some sealers may attack the sealant already on the head gasket.
2. Rear cylinder head bolt to the cylinder head (left cylinder head). Apply sealant to the bolt as described in step 4. Due to clearances, the bolt must be installed at this time.
3. Cylinder head. Make sure the gasket surfaces are clean. Guide the head carefully into place over the dowel pins.
4. Cylinder head bolts.
    - Make sure the bolt threads are clean.
    - Apply sealant (GM part number 1052080 or equivalent) to the bolt threads and under the bolt heads.

    Tighten
    - Cylinder head bolts, as follows:
        - Using the sequence shown in figure 11, tighten all bolts to 25 N•m (20 ft. lbs.).
        - In sequence, tighten all bolts an additional 90 degrees (1/4 turn).
5. Coolant crossover pipe/thermostat assembly. Use new gaskets.

    Tighten
    - Bolts to 42 N•m (31 ft. lbs.).
6. Glow plug temperature inhibit switch connector.
7. Air duct mount bracket.
8. Radiator, bypass, and heater hoses.
9. Pushrods and rocker arm assemblies, in their original locations, as described previously. Hardened ends of the pushrods must face up.
10. Glow plug wires.
11. Generator (right cylinder head). Refer to CHARGING SYSTEM (SEC. 6D3).
12. Air conditioning compressor (if equipped) (left side cylinder head). Refer to AIR CONDITIONING (SEC. 1B).
    - Raise the vehicle. Support with suitable safety stands.
13. Exhaust pipe to the manifold. Refer to EXHAUST (SEC. 6F).
    - Lower the vehicle.
14. Glow plug relay (left cylinder head).
15. Ground wire at the cowl (right cylinder head).
16. Dipstick tube (left cylinder head).
17. Rocker arm covers. Refer to "Rocker Arm Cover Replacement" in this section.
18. Injection lines. Refer to DIESEL FUEL INJECTION (SEC. 6C2).

19. Intake manifold. Refer to "Intake Manifold Replacement" in this section.

- Fill the cooling system with the proper quantity and grade of coolant. Refer to MAINTENANCE AND LUBRICATION (SEC. 0B).

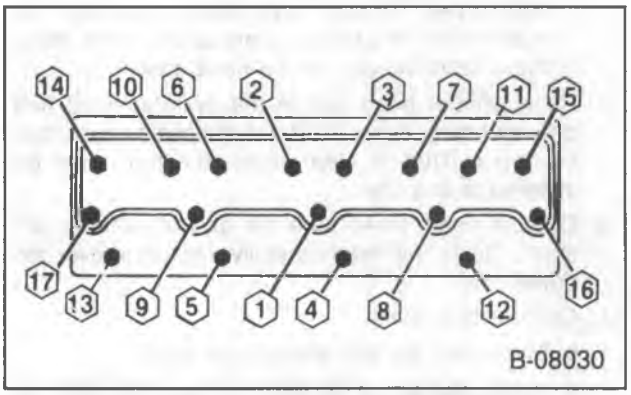

Figure 11—Head Bolt Tightening Sequence

OIL PUMP DRIVE REPLACEMENT

For gear driven vacuum pump replacement, refer to VACUUM PUMP (SEC. 6H).

NOTICE: Do not run the engine without the gear driven vacuum pump or oil pump drive in place. This will cause extensive engine damage.

Remove or Disconnect (Figure 12)

1. Bolt and clamp.
2. Speed sensor wire, if equipped.
3. Oil pump drive.
4. Gasket.

Install or Connect (Figure 12)

1. New gasket to the oil pump drive.
2. Oil pump drive to the engine. Index the drive with the camshaft gear and oil pump drive shaft. Make sure the drive seats fully.
3. Speed sensor wire, if equipped.

NOTICE: See "Notice" on page 6A6-1 of this section.

4. Clamp and bolt.

Tighten

- Bolt to 41 N•m (31 ft. lbs.).

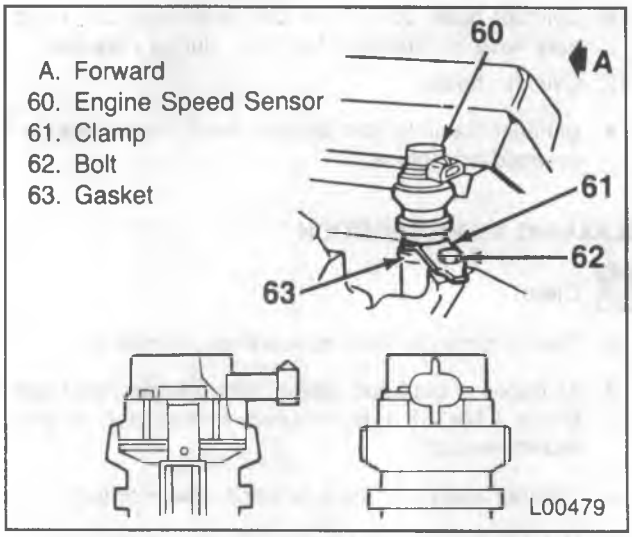

Figure 12—Oil Pump Drive

TORSIONAL DAMPER AND FRONT CRANKSHAFT SEAL REPLACEMENT

Remove or Disconnect (Figure 13)

Tool Required:

J 23523-E Torsional Damper Puller

1. Battery cables.
2. Accessory drive belts.

- Raise the vehicle. Support with suitable safety stands.

3. Bolts and crankshaft pulley.
4. Torsional damper bolt and washer.
5. Torsional damper. Use J 23523-E (figure 13).
6. Front crankshaft seal. Pry out with a screwdriver.

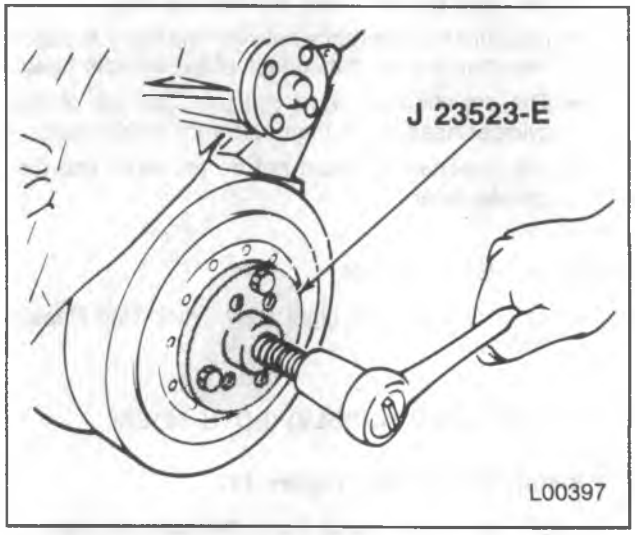

Figure 13—Removing the Torsional Damper

Install or Connect (Figure 14)

Tool Required:

J 22102 Seal Installer

Notice: For steps 3 and 4 see "Notice" on page 6A6-1 of this section.

1. New front crankshaft seal. Use J 22102 (figure 14). Lubricate the seal lips with engine oil.

- Apply engine oil to the crankshaft stub.

2. Torsional damper. Tap into place with a mallet. Make sure the key is in place. Make sure the damper is all the way on the crankshaft.
3. Torsional damper bolt and washer.

Tighten

- Bolt to 270 N•m (200 ft. lbs.).

4. Crankshaft pulley and bolts.

Tighten

- Bolts to 40 N•m (30 ft. lbs.).

- Lower the vehicle.

5. Accessory drive belts. Tension as outlined in ENGINE COOLING (SEC. 6B1).
6. Battery cables.

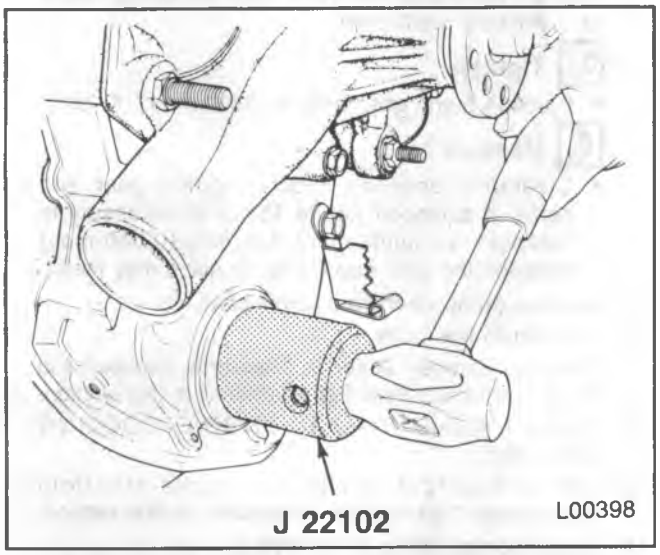

Figure 14—Installing the Front Crankshaft Seal

FRONT COVER REPLACEMENT

Remove or Disconnect (Figures 15 and 16)

- Drain the cooling system.

1. Coolant pump. Refer to ENGINE COOLING (SEC. 6B1).

- Rotate the engine until the mark on the torsional damper aligns with the "0" mark on the timing tab.
- Scribe a mark aligning the injection pump flange and front cover. (If not marked).

2. Torsional damper. Refer to "Torsional Damper and Front Crankshaft Seal Replacement" in this section.

Clean

- RTV from oil pan sealing surface.
- Sealing surfaces on front cover.

3. Intake manifold. Refer to "Intake Manifold Replacement" in this section.
4. Cruise control servo and bracket (if equipped).
5. Generator and both upper and lower mounting brackets. Refer to CHARGING SYSTEM (SEC. 6D3).
6. Power steering pump and mount bracket lay aside. Refer to POWER STEERING (SEC. 3B1).
7. Coolant crossover pipe. Refer to ENGINE COOLING (SEC. 6B1).
8. Oil fill tube from front cover.
9. Injector pump. Refer to DIESEL FUEL INJECTION (SEC. 6C2).
10. Oil pan bolts from front cover.
11. Front injector pump gear cover plate.

- Note position of gear timing mark. If not visible, mark gear to cover (figure 16).

12. Injector pump gear.
13. Remaining front cover bolts.
14. Front cover.

- Do not rotate engine.

Inspect

- Front cover for cracks or damage to sealing surfaces.

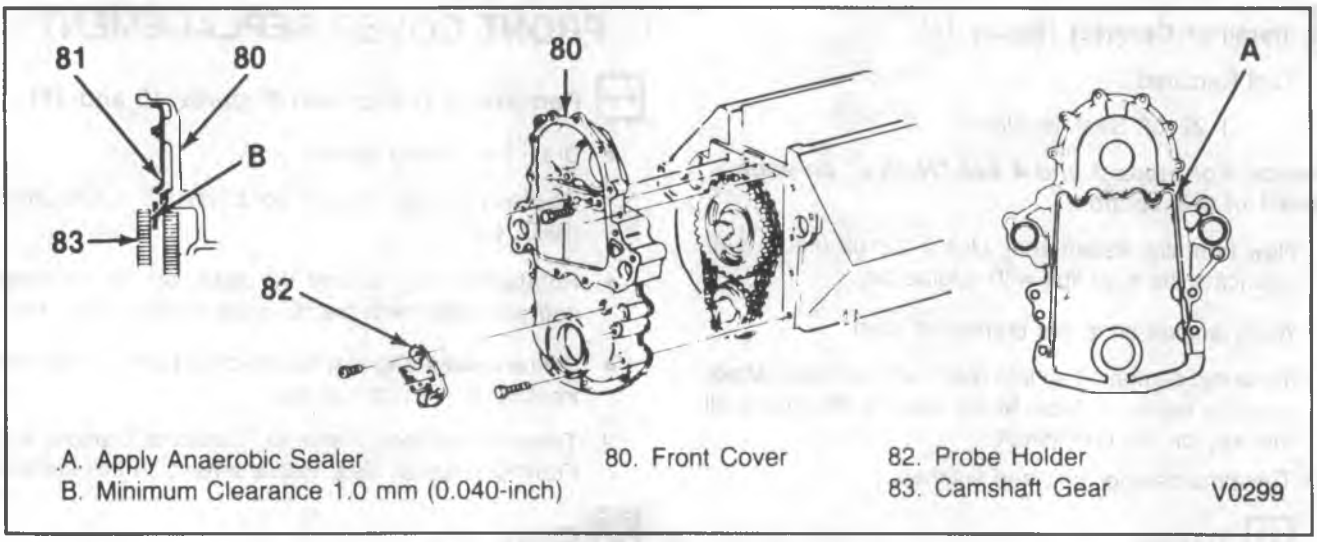

Figure 15—Front Cover and Components

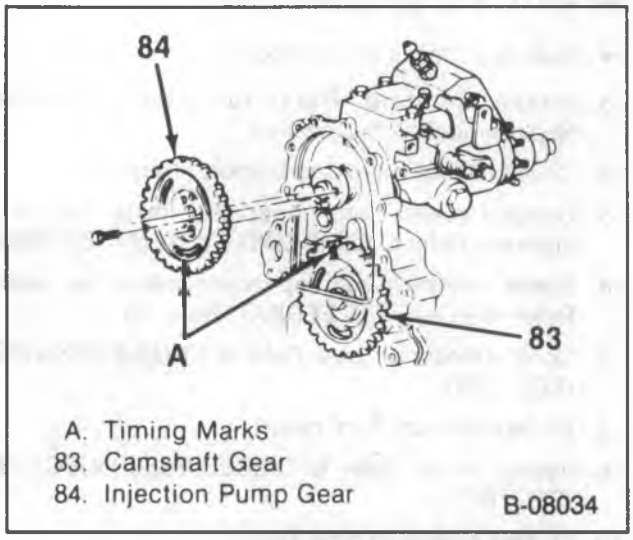

Figure 16—Injection Pump Gear and Timing Marks

Install or Connect (Figures 14, 15 and 16)

Tool Required:

J 22102 Seal Installer

Notice: For steps 2, 3, 4 and 5 see "Notice" on page 6A6-1 of this section.

1. New front crankshaft seal to the front cover. Use J 220102 (figure 14).

- Apply a 2 mm (3/32-inch) bead of anaerobic sealant (GM part number 1052357 or equivalent) to the front cover sealing area shown in figure 15.

  Apply a 5 mm (3/16-inch) bead of RTV sealant (GM part number 1052915 or equivalent) to the front cover sealing surface that mates against the oil pan. The sealer must be wet to the touch when the belts are torqued.

2. Front cover to the engine. Install the attaching bolts.

Tighten

- Front cover to block bolts to 45 N•m (33 ft. lbs.).
- Oil pan to front cover bolts to 10 N•m (84 in. lbs.).

3. Baffle, if equipped.

Tighten

- Baffle bolts and nut to 45 N•m (33 ft. lbs.).

- Align the scribe marks on the front cover and injection pump. If a new front cover was installed, refer to "Marking TDC on the Front Housing" in DIESEL FUEL INJECTION (SEC. 6C2).

4. Injection pump nuts.

Tighten

- Nuts to 42 N•m (31 ft. lbs.).

5. Injection pump gear and bolts. Align the timing marks as previously mentioned.

Tighten

- Injection pump gear bolts to 23 N•m (17 ft. lbs.).

Measure

- Clearance between injection pump gear and baffle, if equipped (figure 15). It is necessary to maintain a minimum of 1.0 mm (0.040-inch) between the gear and baffle, or noise may result.

6. Injection pump gear front cover plate.
7. Fuel return line bolts.
8. Torsional damper. Refer to "Torsional Damper and Front Crankshaft Seal Replacement," in this section.
9. Coolant pump. Refer to ENGINE COOLING (SEC. 6B1).
10. Intake manifold. Refer to "Intake Manifold Replacement" as outlined previously in this section.
11. Cruise control servo (if equipped).
12. Coolant crossover pipe. Refer to ENGINE COOLING (SEC. 6B1).
13. Oil fill tube to front cover.
14. Generator and mounting brackets. Refer to CHARGING SYSTEM (SEC. 6D3).
15. Power steering pump and bracket. Refer to POWER STEERING (SEC. 3B1).

- Fill the cooling system with the proper quantity and grade of coolant. Refer to MAINTENANCE AND LUBRICATION (SEC. 0B).

TIMING CHAIN AND SPROCKET REPLACEMENT

Remove or Disconnect (Figure 17)

1. Front cover. Refer to "Front Cover Replacement" in this section.

Measure

- Timing chain free play as follows:
  - Mount a dial indicator to the front of the block.
  - Position the dial indicator so that the plunger contacts the timing chain between the two gears.
  - Pull the chain outward (parallel to the front face of the block) the maximum amount with finger pressure on the inside of the chain.
  - Set the dial indicator to zero.
  - Move the chain inward (parallel to the front face of the block) the maximum amount with finger pressure on the outside of the chain.
  - The total indicator travel can be noted. With used parts, the deflection must not exceed 20.3 mm (0.800-inch). If the deflection exceeds this limit, the sprockets and timing chain must be inspected for wear and replaced as necessary. With new parts and maximum deflection must not exceed 12.7 mm (0.500 inch).

2. Injection pump gear.
3. Camshaft gear.

- Align the timing marks (figure 17).

4. Camshaft sprocket with timing chain.
5. Crankshaft sprocket.

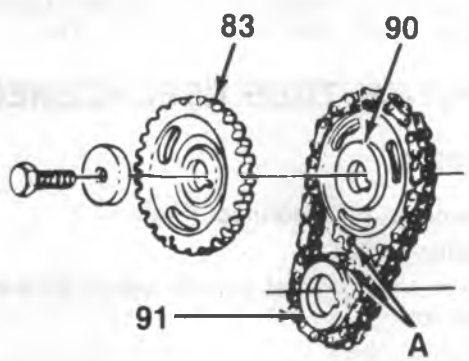

A. Timing Marks
83. Camshaft Gear
90. Camshaft Sprocket
91. Crankshaft Sprocket

B-08035

Figure 17—Timing Chain and Sprockets

Install or Connect (Figures 15 and 17)

Notice: For steps 3 and 4 see "Notice" on page 6A6-1 of this section.

1. Crankshaft sprocket.
2. Camshaft sprocket with timing chain.

Important

- Align the timing marks (figure 17).

3. Camshaft gear, bolt, and washer.

Tighten

- Bolt to 100 N•m (75 ft. lbs.).

4. Injection pump gear and bolts.

Important

- Align the timing marks (figure 16).

Tighten

- Bolts to 23 N•m (17 ft. lbs.).

5. Front cover. Refer to "Front Cover Replacement" in this section.

Adjust

- Injection pump timing, if new gears, sprockets, or timing chain were installed. Refer to DIESEL FUEL INJECTION (SEC. 6C2).

CAMSHAFT REPLACEMENT

R/V MODELS

Remove or Disconnect (Figure 18)

1. Battery cables.

- Drain the cooling system.

2. Radiator, shrouds, and fan. Refer to ENGINE COOLING (SEC. 6B1).
3. Vacuum pump. Refer to VACUUM PUMP (SEC. 6H).
4. Power steering pump. Refer to POWER STEERING (SEC. 3B3).
5. Generator.
6. Air conditioning compressor (if equipped). Position aside. Refer to AIR CONDITIONING (SEC. 1B).
7. Rocker arm covers. Refer to "Rocker Arm Cover Replacement" in this section.
8. Rocker arm assemblies and pushrods. Refer to "Rocker Arm, Shaft, and Pushrod Replacement" in this section.

Important

- Rocker arm assemblies and pushrods must be marked for return to their original locations.

9. Hydraulic lifters. Refer to "Hydraulic Lifter Replacement" in this section. Place the lifters in an organizer rack. The lifters must be installed in the same bore from which they were removed.
10. Front cover. Refer to "Front Cover Replacement" in this section.

11. Fuel pump (lift pump).
12. Air conditioning condenser mounting bolts (if equipped). Lift the condenser with the aid of an assistant. Refer to AIR CONDITIONING (SEC. 1B).
13. Timing chain and camshaft sprocket. Refer to "Timing Chain and Camshaft Sprocket Replacement" in this section.
14. Front engine mounting through-bolts.

NOTICE: When raising or supporting the engine for any reason, do not use a jack under the oil pan, crankshaft pulley, or any sheet metal. Due to the small clearance between the oil pan and the oil pump screen, jacking against the oil pan may cause it to be bent again the pump screen, resulting in a damaged oil pickup unit.

- Raise the engine and block in position.

15. Bolts and thrust plate.
16. Camshaft. Pull the camshaft from the block carefully to avoid damage to the camshaft bearings.
17. Spacer (if necessary).

Cleaning, Inspection and Repair

Clean, inspect and repair or replace the camshaft and related components, as outlined in the 1991 Light Duty Truck Unit Repair Manual.

The unit repair manual also describes camshaft bearing replacement.

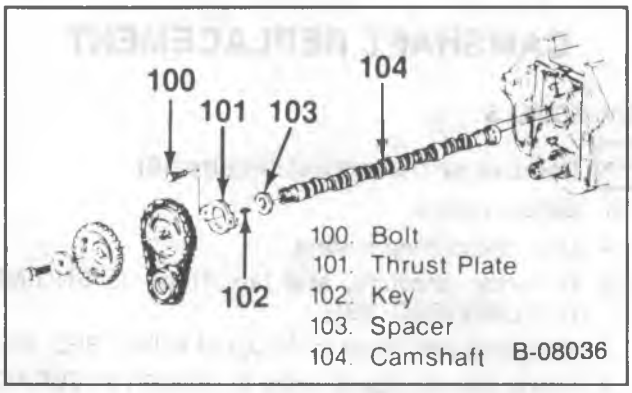

Figure 18—Camshaft and Components

Install or Connect (Figures 17, 18, 36 and 37)

NOTICE: For steps 3 and 4 see "Notice" on page 6A6-1 of this section.

- When a new camshaft is installed, replacement of engine oil, oil filter, and all hydraulic lifters is recommended.

1. Spacer, with the ID chamfer toward the camshaft.
2. Camshaft.
   - Coat the camshaft lobes with High Viscosity Oil with Zinc GM part# 12345501 (or equivalent).
   - Lubricate the camshaft bearing journals with engine oil.
   - Insert the camshaft carefully into the block to avoid damage to the camshaft bearings.
3. Thrust plate and bolts.

Tighten

- Bolts to 23 N•m (17 ft. lbs.).

- Lower the engine.

4. Engine mounting through-bolts and nuts.

Tighten

- Fasteners to specifications. Refer to figures 36 and 37.

5. Timing chain and sprockets, as outlined previously.

Important

- Align the timing marks (figure 17).

6. Fuel pump (lift pump).
7. Front cover. Refer to "Front Cover Replacement" in this section.
8. Air conditioning condenser (if equipped). Refer to AIR CONDITIONING (SEC. 1B).
9. Hydraulic lifters. Refer to "Hydraulic Lifter Replacement" in this section. Used lifters must be installed in the same bore from which they were removed.
10. Rocker arm assemblies and pushrods in their original locations, as outlined previously. Hardened ends of the pushrods must face up.
11. Rocker arm covers. Refer to "Rocker Arm Cover Replacement" in this section.
12. Air conditioning compressor (if equipped). Refer to AIR CONDITIONING (SEC. 1B).
13. Generator. Refer to CHARGING SYSTEM (SEC. 6D3).
14. Power steering pump. Refer to POWER STEERING (SEC. 3B3).
15. Vacuum pump. Refer to VACUUM PUMP (SEC. 6H).
16. Fan, radiator, and radiator shrouds. Refer to ENGINE COOLING (SEC. 6B1).
17. Battery cables.

- Fill the cooling system with the proper quantity and grade of coolant. Refer to MAINTENANCE AND LUBRICATION (SEC. 0B).
- Evacuate and charge the air conditioning system. Refer to AIR CONDITIONING (SEC. 1B).

DIPSTICK TUBE REPLACEMENT

R/V MODELS

Remove or Disconnect (Figure 19)

1. Battery cables.
2. Dipstick tube bracket, nut and washer, at the exhaust manifold.
3. Dipstick tube.
4. O-ring from the dipstick tube.

Install or Connect (Figure 19)

1. New O-ring to the dipstick tube.

2. Dipstick tube to the engine.
   - Be sure the bead is fully seated.
3. Dipstick tube bracket nut and washer.
4. Battery cables.

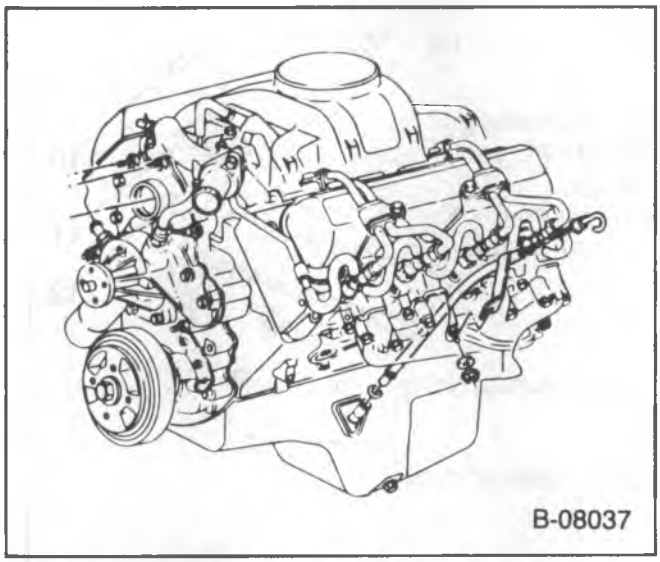

Figure 19—Oil Dipstick Tube (R/V Models)

P-MODELS

Remove or Disconnect (Figure 20)

1. Battery cables.
2. Engine cover.
3. Air cleaner.
4. Dipstick tube bracket, at the thermostat housing.
5. Dipstick tube bracket, at the rocker arm cover bracket (P-Commercial), or at the upper radiator support (P-Motorhome).
- Raise the vehicle. Support with suitable safety stands.
6. Dipstick tube from the oil pan.
- Lower the vehicle.
7. Dipstick tube from the vehicle.
8. O-ring.

Install or Connect (Figure 20)

1. New O-ring to the dipstick tube.
2. Dipstick tube to the vehicle.
- Raise the vehicle. Support with suitable stands.
3. Dipstick tube to the oil pan.
   - Be sure the bead is fully seated.
4. Dipstick tube bracket at the rocker arm cover, (P-Commercial), or at the upper radiator support (P-Motorhome).
5. Dipstick tube bracket at the thermostat housing.
6. Air cleaner.
7. Engine cover.
8. Battery cables.

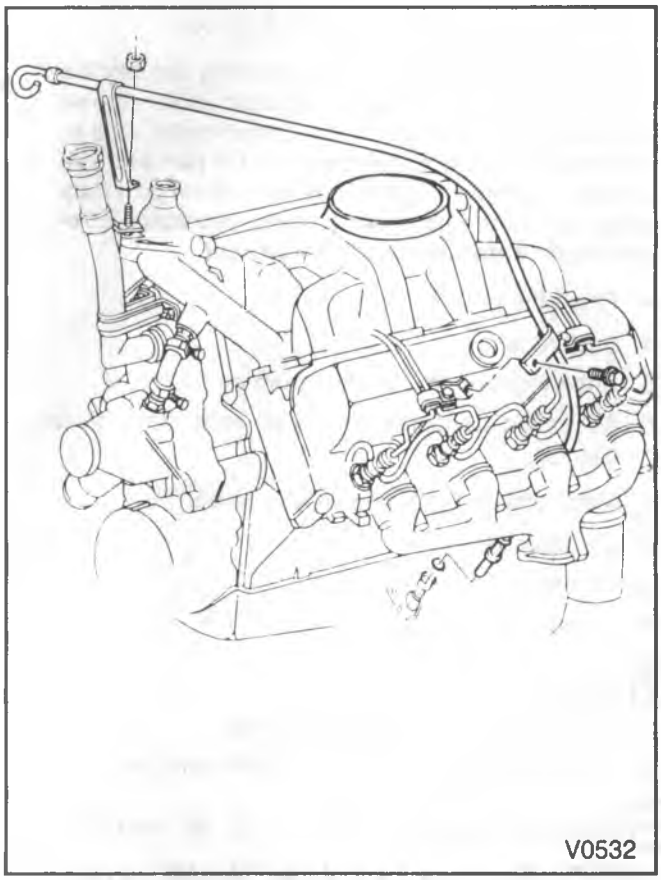

Figure 20—Oil Dipstick (P-Commercial)

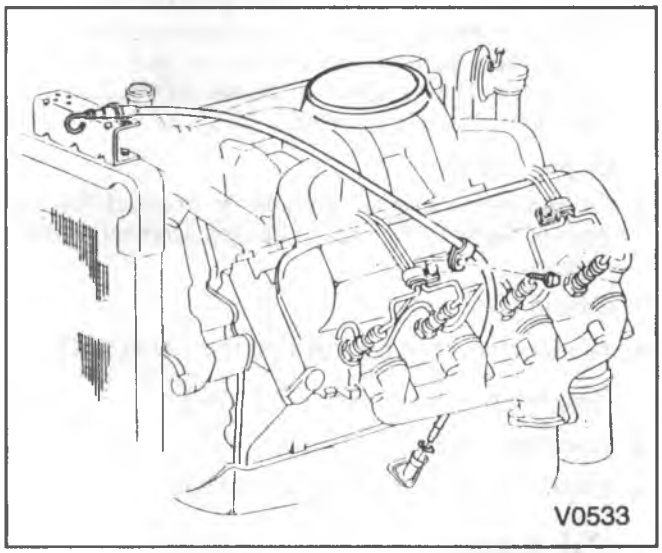

Figure 21—Oil Dipstick (P-Motorhomes)

OIL PAN REPLACEMENT

Remove or Disconnect

1. Battery cables.
- Raise the vehicle. Support with suitable safety stands.
- Drain the engine oil.
- Oil filter
2. Flywheel cover.

3. Left front engine mounting through-bolt.

NOTICE: When raising or supporting the engine for any reason, do not use a jack under the oil pan, crankshaft pulley or any sheet metal. Due to the small clearance between the oil pan and the oil pump screen, jacking against the oil pan may cause it to be bent against the pump screen, resulting in a damaged oil pickup unit.

- Raise the engine.

4. Strut rods.
5. Battery cables and clamps from oil pan.
6. Automatic transmission cooler lines front oil pan clamps.

- Move engine block heater wire aside.

7. Oil pan bolts.
8. Oil pan.
9. Oil pan rear seal.

Clean

1. Old RTV from the oil pan and block.
2. All oil and grease from the gasket surfaces.

Install or Connect (Figures 22, 36, and 37)

NOTICE: For steps 3 and 4 see "Notice" on page 6A6-1 of this section.

- Apply a 5 mm (3/16-inch) bead of RTV sealant (GM part number 1052915 or equivalent) to the oil pan sealing surface, inboard of the bolt holes (figure 22). The sealer must be wet to the touch when the oil pan is installed.

1. Oil pan rear seal.
2. Oil pan to the engine. Be sure to connect the oil dipstick. Refer to "Dipstick Tube Replacement" in this section.
3. Oil pan bolts.

- All except rear two bolts to 10.0 N•m (84 in. lbs.).
- Rear two bolts to 23 N•m (17 ft. lbs.).
- Lower the engine.

4. Engine mounting through-bolt and nut.

Tighten

- Fasteners to specifications. Refer to figures 36 and 37.

5. Flywheel cover.
6. Strut rods.
7. Battery cables and clamps to oil pan.
8. Automatic transmission cooler lines to oil pan clamps.

- Lower the vehicle.

9. Proper quantity and grade of engine oil. Refer to MAINTENANCE AND LUBRICATION (SEC. 0B).
10. Battery cables.

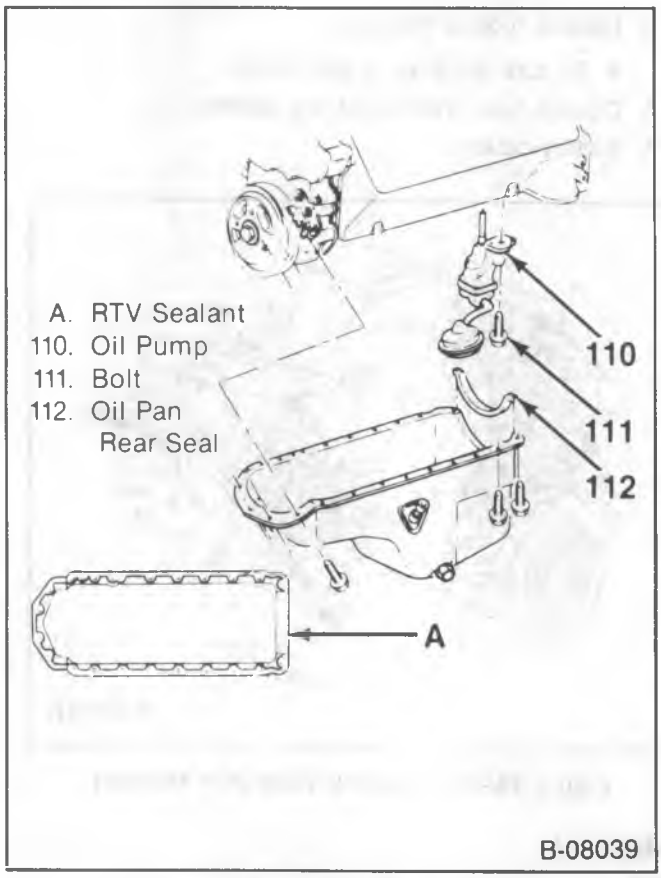

Figure 22—Oil Pan and Oil Pump

OIL PUMP REPLACEMENT

Remove or Disconnect (Figure 22)

1. Oil pan. Refer to "Oil Pan Replacement" in this section.
2. Oil pump to main bearing cap bolt.
3. Oil pump and extension shaft.

Inspect

- Oil pump pick up tube and screen for damage.
- Oil pump extension shaft bushing for cracks.

Oil Pump Repair

- Oil pumps are not repairable. If damaged, they must be replaced.

Install or Connect (Figure 22)

1. Oil pump and extension shaft to the engine. Align the extension shaft hex with the drive hex on the oil pump drive or vacuum pump. The oil pump should push easily into place.

NOTICE: See "Notice" on page 6A6-1 of this section.

2. Oil pump bolt.

Tighten

- Oil pump bolt to 90 N•m (65 ft. lbs.).

3. Oil pan. Refer to "Oil Pan Replacement" in this section.

REAR CRANKSHAFT OIL SEAL REPLACEMENT

Before a new seal is installed, the CDR and crankcase ventilation system should be thoroughly inspected and crankcase pressure should be checked. Refer to DIESEL EMISSIONS (SEC. 6E2).

The production rear crankshaft oil seal is a two-piece lip type seal. Repair procedures follow:

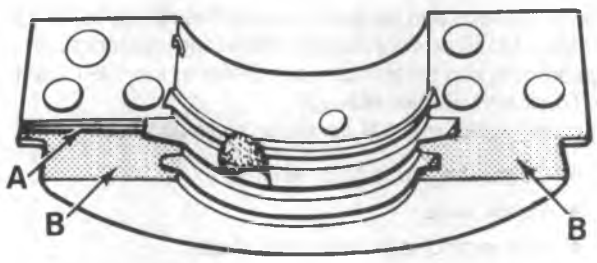

A. Oil Relief Slot
B. Apply Anaerobic Sealer to Shaded Area

F-02475

Figure 23—Applying Sealer to the Rear Main Bearing Cap

TWO PIECE TYPE SEAL

Remove or Disconnect

1. Oil pan and oil pump, as outlined previously in this section.
2. Rear main bearing cap.
3. Upper and lower seal.

Clean

- Upper and lower seal grooves and bearing cap slot with a chlorinated solvent, such as carburetor spray cleaner.
- Main bearing cap and block mating surfaces.

Measure

- Rear main bearing clearance, using plastic gage material. Refer to the 1991 Light Duty Truck Unit Repair manual. If the clearance is outside specifications, correct as necessary.

Install or Connect (Figures 23 and 24)

1. Seal halves in the block (figure 24).
   - Apply a light coating of engine oil to the seal lips where they contact the crankshaft.
   - "Roll" one seal half into the block seal groove until 13 mm (1/2-inch) of the seal's one end is extending out of the block.
   - Insert the other seal half into the opposite side of the seal groove in the block.

Important

- The contact ends of the seal halves should now be at the four and ten o'clock positions, or at the eight and two o'clock positions. This is necessary to align the rear main bearing cap and seal lips.

NOTICE: To prevent damage to the main bearing caps, the caps are to be tapped into the block using a brass or leather hammer. The new seal is used as a guide. The cap must NOT be pulled into the block with the bolts.

NOTICE: See "NOTICE" on page 6A6-1 of this section.

2. Main bearing cap to the block.
   - Lightly coat the seal groove in the main bearing cap with adhesive (GM part number 1052621 [Loctite 414] or equivalent).
   - Apply a thin film of anaerobic sealant (GM part number 1052756 or equivalent) to the main bearing cap as shown in figure 23. Do not put sealant in the oil relief slot.
   - Apply engine oil to the main bearing cap bolt threads.
   - Tap the main bearing cap into place with a brass or leather mallet. Then install the bolts.

Tighten

- Main bearing cap bolts to specifications, in the following sequence:
- Inner bolts: 150 N•m (110 ft. lbs.).
- Outer bolts: 135 N•m (100 ft. lbs.).

- Re-tighten all bolts using the same sequence.

3. Oil pump and oil pan, as outlined previously.

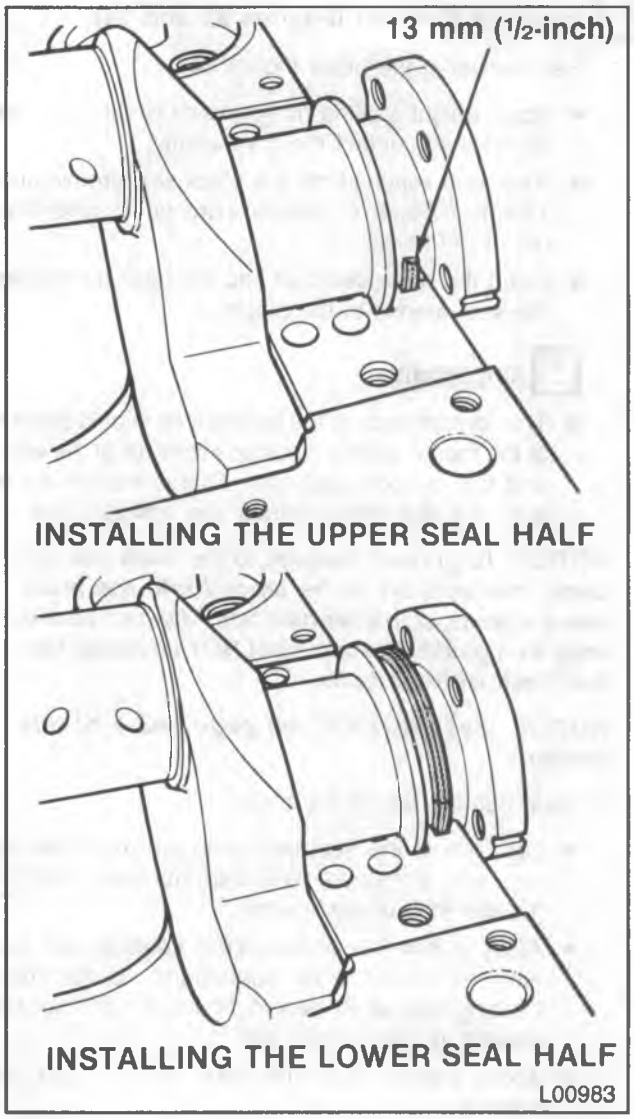

Figure 24—Installing the Two Piece Rear Crankshaft Seal

CONNECTING ROD AND PISTON REPLACEMENT

Remove or Disconnect (Figure 25)

1. Cylinder head. Refer to "Cylinder Head Replacement" in this section.
2. Oil pan and oil pump, as outlined previously in this section.
3. Ridge or deposits from the upper end of the cylinder bores.
   - Turn the crankshaft until the piston is at BDC.
   - Place a cloth on top of the piston.
   - Perform the cutting procedure with a ridge reamer.
   - Turn the crankshaft until the piston is at TDC.
   - Remove the cloth and cuttings.
4. Connecting rod cap. Check the connecting rod and cap for identification marks. Mark the parts if required. The connecting rod and cap must be kept together as mating parts.
5. Connecting rod and piston.
   - Attach two short pieces of 10 mm (3/8-inch) hose to the connecting rod bolts (figure 25). This will protect the crankshaft journal during removal.
   - Push the connecting rod and piston out of the bore.
6. Connecting rod bearings. Place the bearings in a rack if they are to be reused, so they can be returned to their original locations.

Cleaning, Inspection, and Repair

Clean, inspect, and repair or replace the components as necessary. Measure connecting rod bearing clearance, piston clearance, ring clearances, etc. Refer to the 1991 Light Duty Truck Unit Repair Manual.

The unit repair manual contains information on:

- Connecting rods and pistons.
- Piston rings.
- Connecting rods and crankshaft.
- Cylinder bores.

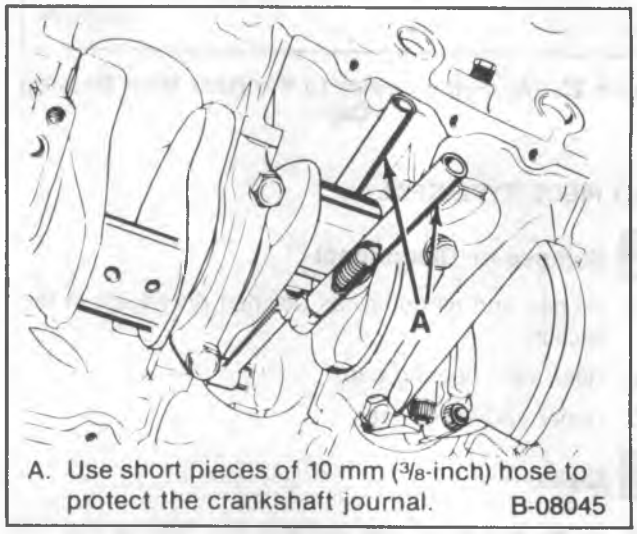

Figure 25—Replacing the Connecting Rod and Piston

Install or Connect (Figures 25 through 28)

Tool Required:

J 8037 Ring Compressor

- Make sure the cylinder walls are clean. Lubricate each cylinder wall lightly with engine oil.
- Make sure the pistons are installed in their matching cylinders. Install new pistons in the cylinders for which they were fitted. Install used pistons in the cylinders from which they were removed.

1. Connecting rod bearings.
   - Be certain that the bearings are the proper size.
   - Install the bearings in the connecting rods and connecting rod caps.
   - Lubricate the bearings with engine oil.

2. Piston and connecting rod to the proper bore.
   - With the connecting rod cap removed, install two short pieces of 10 mm (3/8-inch) hose onto the connecting rod studs.
   - Locate the piston ring end gaps as shown in figure 26. Lubricate the piston and rings with engine oil.
   - Without disturbing the ring end gap location, install J 8037 over the piston (figure 27).
   - The piston must be installed so that the depression in the piston crown is toward the outside of the engine. The connecting rod bearing tang slots must be opposite the camshaft.
   - Place the piston in its matching bore. Using light blows with a hammer handle, tap the piston down into its bore (figure 27). At the same time, from beneath the vehicle guide the connecting rod to the crankshaft with the pieces of hose (figure 25). Hold the ring compressor against the block until all rings have entered the cylinder bore.
   - Remove the hoses from the connecting rod bolts.

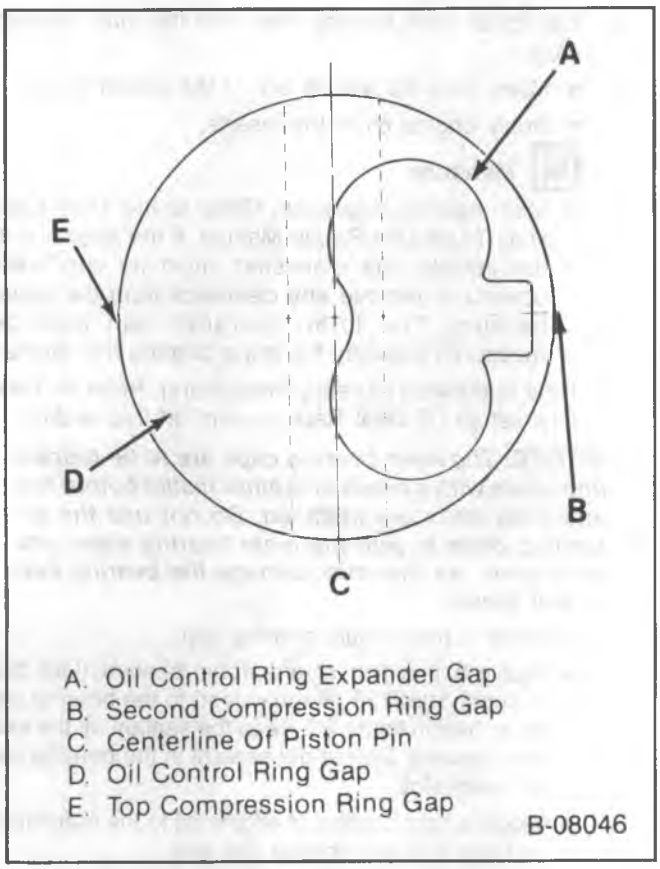

Figure 26—Ring Gap Location

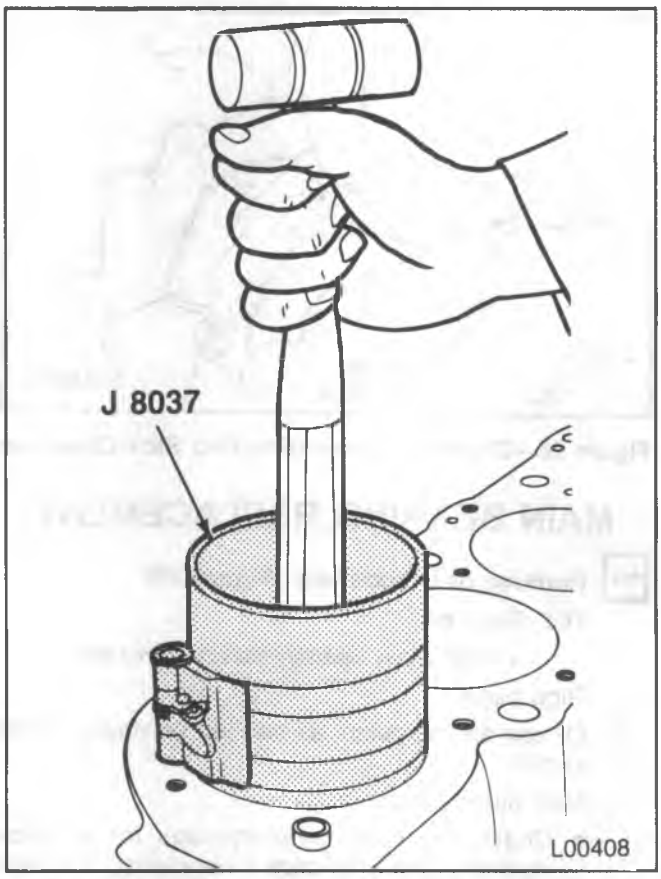

Figure 27—Installing the Piston and Connecting Rod

Measure

- Connecting rod bearing clearance. Refer to the 1991 Light Duty Truck Unit Repair Manual.

3. Connecting rod cap and bearing.

NOTICE: See "Notice" on page 6A6-1 of this section.

4. Connecting rod cap nuts.

Tighten

- Connecting rod cap nuts to 65 N•m (48 ft. lbs.).

Measure

- Connecting rod side clearance. Use a feeler gage between the connecting rod and crankshaft (figure 28). The correct clearance is 0.17-0.63 mm.

5. Oil pump (if removed), as outlined previously.
6. Oil pan, as outlined previously.
7. Cylinder head. Refer to "Cylinder Head Replacement" in this section.

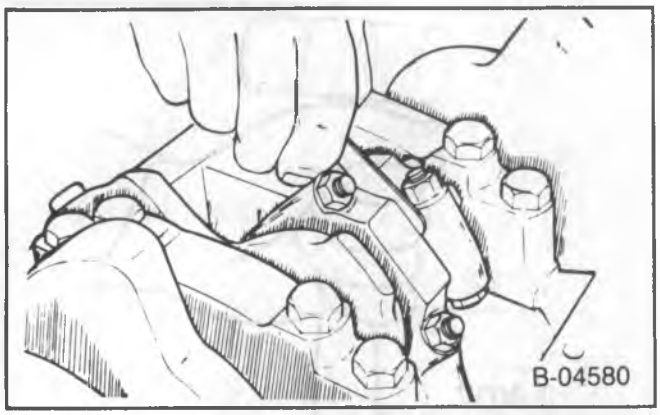

Figure 28—Checking Connecting Rod Side Clearance

MAIN BEARING REPLACEMENT

Remove or Disconnect (Figure 29)

Tool Required:

J 8080 Main Bearing Remover/Installer

1. Glow plugs.
2. Oil pan and oil pump, as outlined previously in this section.
3. Main bearing caps.
   - Check the main bearing caps for location markings. Mark the caps if necessary. The caps must be returned to their original locations during assembly.
4. The lower main bearing inserts from the main bearing caps.
5. Rear crankshaft oil seal (if necessary). Refer to "Rear Crankshaft Oil Seal Replacement" in this section.
6. Upper main bearing inserts.
   - Insert J 8080 into the crankshaft oil hole (figure 29).
   - Rotate the crankshaft to "turn" the bearing insert out of the block.

Cleaning, Inspection, and Repair

Clean, inspect, and repair or replace the components as required. Refer to the 1988 Light Duty Trucks Unit Repair Manual. The unit repair manual contains information on:

- Crankshaft.
- Main and connecting rod bearings.

Install or Connect (Figures 24, 29 and 30)

Tool Required:

J 8080 Main Bearing Remover/Installer

NOTICE: For steps 4 and 5 see "Notice" on page 6A6-1 of this section.

1. Upper main bearing inserts.
   - Insert tool J8080 into a crankshaft main bearing oil hole (figure 29).
   - Apply engine oil to inserts of the proper size.
   - Insert the plain end (without the bearing tang) of the insert between the crankshaft and the notched side of the block.

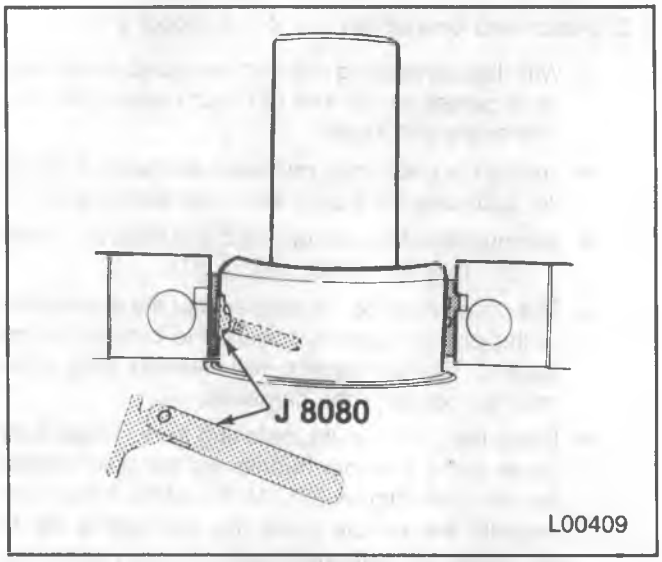

Figure 29—Replacing the Main Bearings

   - Rotate the crankshaft to "roll" the insert into the block.
   - Remove the tool.
2. The lower main bearing inserts to the main bearing caps.
   - Make sure the inserts are of the proper size.
   - Apply engine oil to the inserts.

Measure

- Main bearing clearance. Refer to the 1991 Light Duty Truck Unit Repair Manual. If the engine is in the vehicle, the crankshaft must be supported upward to remove any clearance from the upper bearing. The total clearance can then be measured between the lower bearing and journal.

3. Rear crankshaft oil seal (if necessary). Refer to "Rear Crankshaft Oil Seal Replacement" in this section.

NOTICE: The main bearing caps are to be tapped into place with a brass or leather mallet before the attaching bolts are installed. Do not use the attaching bolts to pull the main bearing caps into their seats, as this may damage the bearing cap and/or block.

4. Number 5 (rear) main bearing cap.
   - Apply a thin film of anaerobic sealant (GM part number 1052756 or equivalent) to the bearing cap as shown in figure 23. Keep the sealant off the seal and bearing. Do not put sealant in the bearing cap oil relief slot.
   - Apply a light coating of engine oil to the crankshaft surface that will contact the seal.
   - Apply engine oil to the main bearing cap bolt threads.
   - Tap the main bearing cap into place with a brass or leather mallet. Then install the bolts.

Tighten

- Bolts to specifications, in the following sequence:
- Inner bolts: 150 N•m (110 ft. lbs.).
- Outer bolts: 135 N•m (100 ft. lbs.).
- Re-tighten all bolts in the same sequence.

5. Numbers 1, 2, and 4 main bearing caps and bolts.

Tighten

- Bolts to specifications. Refer to step 4.

6. Number 3 (center) main bearing cap and bolts. Tighten the bolts temporarily to 14 N•m (10 ft. lbs.).

Measure

- Crankshaft endplay, as follows:
  - Tap the end of the crankshaft first rearward then forward with a lead hammer. This will line up the rear main bearing and crankshaft thrust surfaces.
  - Tighten the rear main bearing cap bolts to specifications. Refer to step 4.
  - With the crankshaft forced forward, measure at the front end of the number 3 main bearing with a feeler gage (figure 30). The proper clearance is 0.10-0.25 mm.

7. Oil pump and oil pan, as outlined previously.
8. Glow plugs.

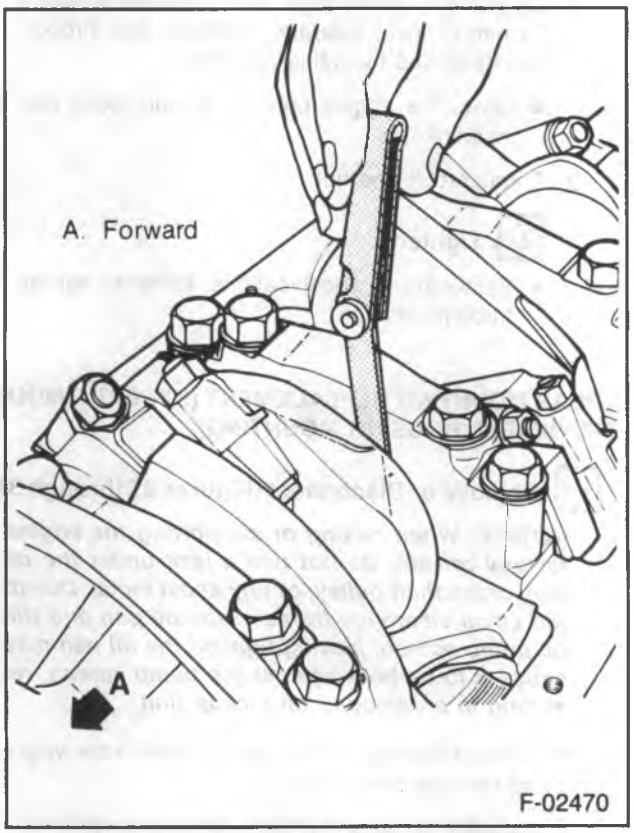

Figure 30—Measuring Crankshaft Endplay

CRANKSHAFT REPLACEMENT

1. Remove the engine. Refer to "Engine Replacement" in this section.
2. Refer to the 1991 Light Duty Truck Unit Repair Manual for crankshaft replacement procedures.

OIL FILTER BYPASS VALVE REPLACEMENT

Remove or Disconnect (Figure 31)

1. Oil filter.
2. Oil filter bypass valve. Pry out with a screwdriver.

Clean

- Recess in the block.

Install or Connect (Figure 31)

1. Oil filter bypass valve. Tap into place, using a 16 mm socket.
2. Oil filter.
3. Proper quantity and grade of engine oil. Refer to MAINTENANCE AND LUBRICATION (SEC. 0B).

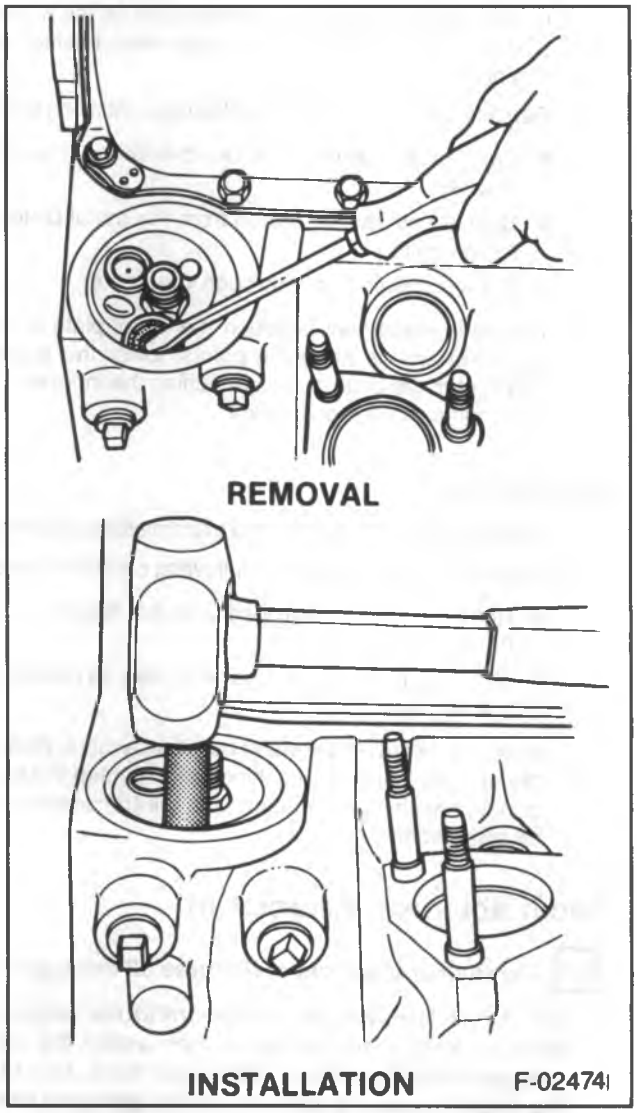

Figure 31—Replacing the Oil Filter Bypass Valve

ENGINE MOUNTINGS

NOTICE: Broken or deteriorated mountings can cause the misalignment and eventual destruction of certain drive train components. When a single mounting breakage occurs, the remaining mountings are subjected to abnormally high stresses.

INSPECTING ENGINE MOUNTINGS

Front Engine Mountings

NOTICE: When raising or supporting the engine for any reason, do not use a jack under the oil pan, crankshaft pulley or any sheet metal. Due to the small clearance between the oil pan and the oil pump screen, jacking against the oil pan may cause it to be bent against the pump screen, resulting in a damaged oil pickup unit.

1. Raise the engine to remove weight from the mountings and to place a slight tension on the rubber cushion. Observe both mountings while raising the engine.
2. Replace the mounting if the following conditions exist:
   - Hard rubber surface covered with heat check cracks.
   - Rubber cushion separated from the metal plate of the mounting.
   - Rubber cushion split through the center.
3. If there is movement between the metal plate of the mounting and its attaching points, lower the engine and tighten the bolts or nuts attaching the mounting to the engine, frame, or bracket.

Rear Mountings

1. Push up and pull down on the transmission mounting.
2. Replace the mounting if the following conditions exist:
   - Rubber cushion separated from the metal plate of the mounting.
   - Mounting bottomed out (tailshaft can be moved up but not down).
3. If there is relative movement between a metal plate of the mounting and its attaching point, tighten the bolts or nuts attaching the mounting to the transmission or crossmember.

FRONT MOUNTING REPLACEMENT

Remove or Disconnect (Figures 32 through 34)

NOTICE: When raising or supporting the engine for any reason, do not use a jack under the oil pan, crankshaft pulley, or any sheet metal. Due to the small clearance between the oil pan and the oil pump screen, jacking against the oil pan may cause it to be bent against the pump screen, resulting in a damaged oil pickup unit.

- Support the engine with a suitable jack. Do not load the engine mounting.

1. Engine mounting through-bolt and nut.
   - Raise the engine only enough to permit removal of the engine mounting.
2. Mounting assembly bolts, nuts, and washers.
3. Mounting assembly.

Install or Connect (Figures 32 through 34)

NOTICE: For steps 2 and 3 see "Notice" on page 6A6-1 of this section.

1. Engine mounting assembly to the vehicle.
   - On V and P models, the through-bolt must be inserted from the rear of the right side mounting before the mounting is installed in the vehicle.
2. Mounting assembly bolts, nuts, and washers.

   Tighten

   - Fasteners to specifications. Refer to figures 32 through 34.

- On V and P models (right side), make sure there is 25 mm (1 inch) clearance between the through-bolt head and mounting assembly.
  - Lower the engine until the through-bolts can be inserted.

3. Through-bolt and nut.

   Tighten

   - Fasteners to specifications. Refer to figures 32 through 34.

REAR MOUNTING REPLACEMENT (EXCEPT P MODEL FLYWHEEL HOUSING MOUNTING)

Remove or Disconnect (Figures 35 through 37)

NOTICE: When raising or supporting the engine for any reason, do not use a jack under the oil pan, crankshaft pulley, or any sheet metal. Due to the small clearance between the oil pan and the oil pump screen, jacking against the oil pan may cause it to be bent against the pump screen, resulting in a damaged oil pickup unit.

- Support the rear of the engine to relieve the weight on the rear mountings.

1. Mounting to crossmember nut(s) and washer(s).
2. Mounting to transmission bolts and washers.
   - Raise the rear of the engine only enough to permit removal of the mounting.
3. Mounting.

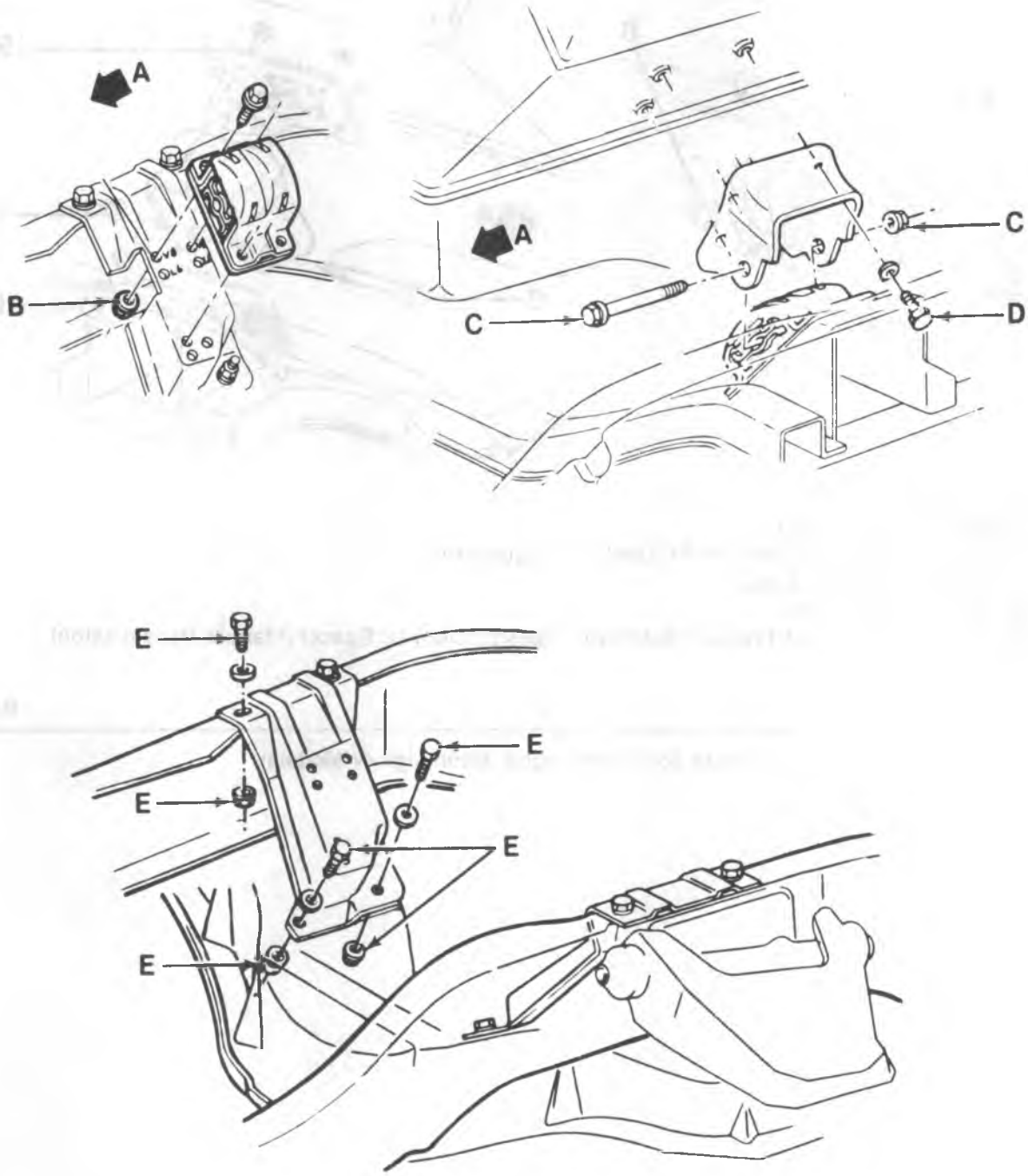

A. Forward
B. 40 N·m (30 Ft. Lbs.)
C. Torque Bolt To 115 N·m (85 Ft. Lbs.) Or, Torque Nut To 75 N·m (55 Ft. Lbs.)
D. 48 N·m (36 Ft. Lbs.)
E. Torque Bolt To 48 N·m (36 Ft. Lbs.) Or, Torque Nut To 40 N·m (30 Ft. Lbs.)

B-08048

Figure 32—Front Engine Mountings (R Models)

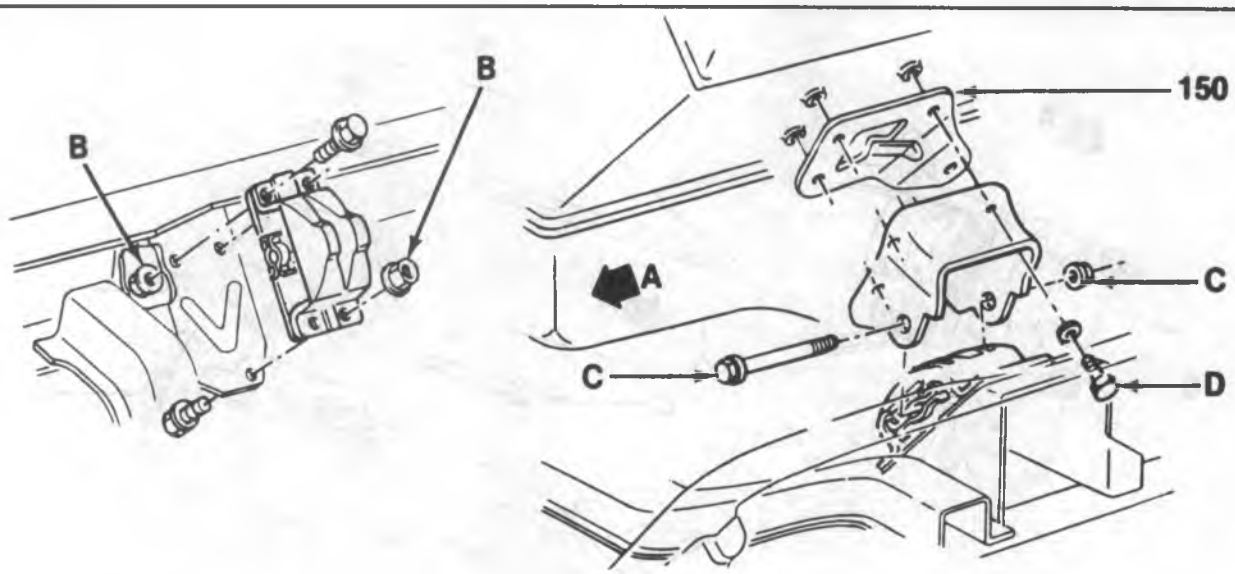

A. Forward
B. 40 N·m (30 Ft. Lbs.)
C. Torque Bolt To 115 N·m (85 Ft. Lbs.) Or, Torque Nut To 75 N·m (55 Ft. Lbs.)
D. 48 N·m (36 Ft. Lbs.)
150. Transmission Strut Bracket (Automatic Transmission) Or Spacer (Manual Transmission)

B-08049

Figure 33—Front Engine Mountings (V Models)

A. Front
B. Tighten Bolt To 115 N·m (85 Ft. Lbs.) Or, Tighten Nut To 75 N·m (55 Ft. Lbs.)
C. 48 N·m (36 Ft. Lbs.)
D. 40 N·m (30 Ft. Lbs.)

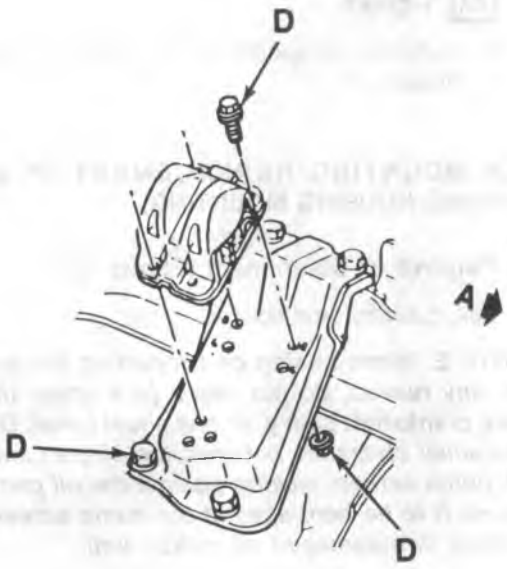

MODELS WITHOUT I-BEAM AXLE

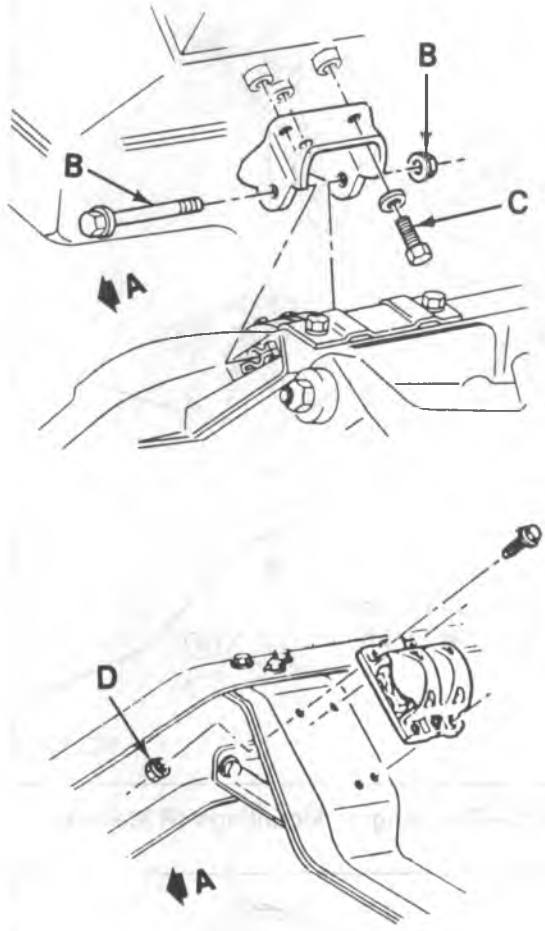

MODELS WITH I-BEAM AXLE (RPO-FS3)

L00402

Figure 34—Front Engine Mountings (P Models)

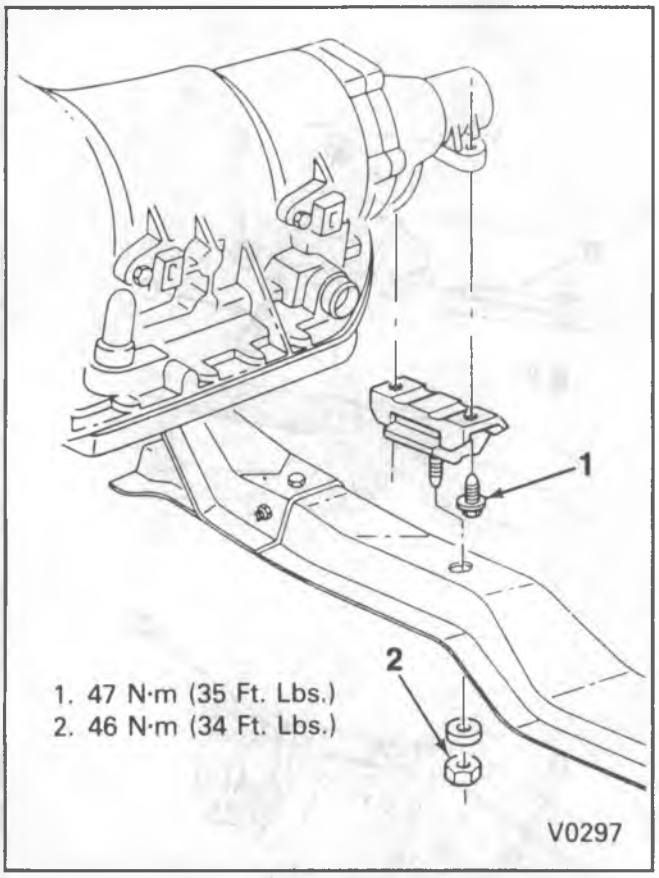

Figure 35—Rear Engine Mountings (R Models)

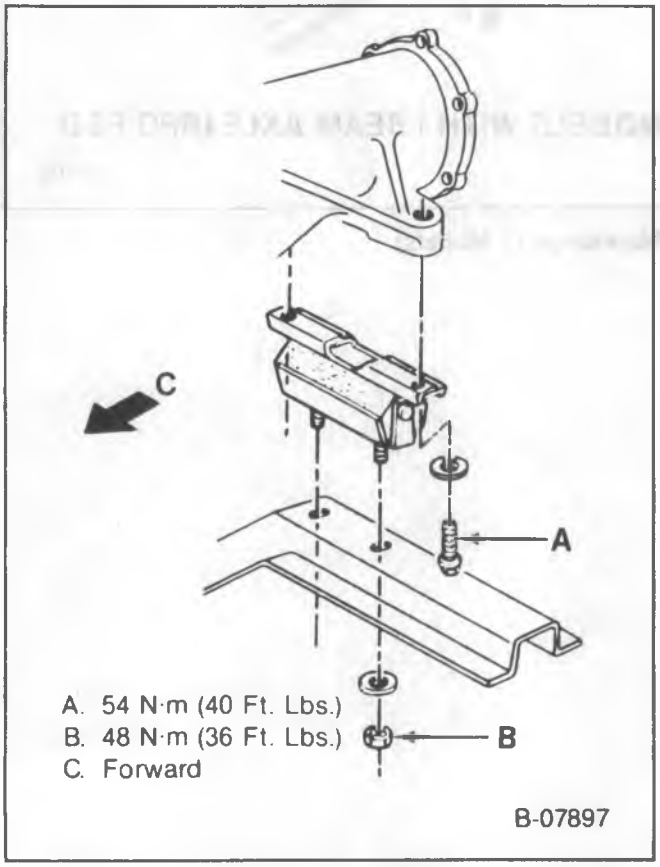

Figure 36—Rear Engine Mountings (V Models)

Install or Connect (Figures 35 through 37)

1. Mounting.

- Lower the rear of the engine.

NOTICE: See "Notice" on page 6A6-1 of this section.

2. Mounting to transmission bolts and washers.
3. Mounting to crossmember nut(s) and washer(s).

Tighten

- Fasteners to specifications. Refer to figures 35 through 37.

REAR MOUNTING REPLACEMENT (P MODEL FLYWHEEL HOUSING MOUNTING)

Remove or Disconnect (Figure 38)

1. Bolt, cushion, and spacer.

NOTICE: When raising or supporting the engine for any reason, do not use a jack under the oil pan, crankshaft pulley, or any sheet metal. Due to the small clearance between the oil pan and the oil pump screen, jacking against the oil pan may cause it to be bent against the pump screen, resulting in a damaged oil pickup unit.

2. Engine mounting.

- Raise the rear of the engine only enough to permit removal of the mounting.

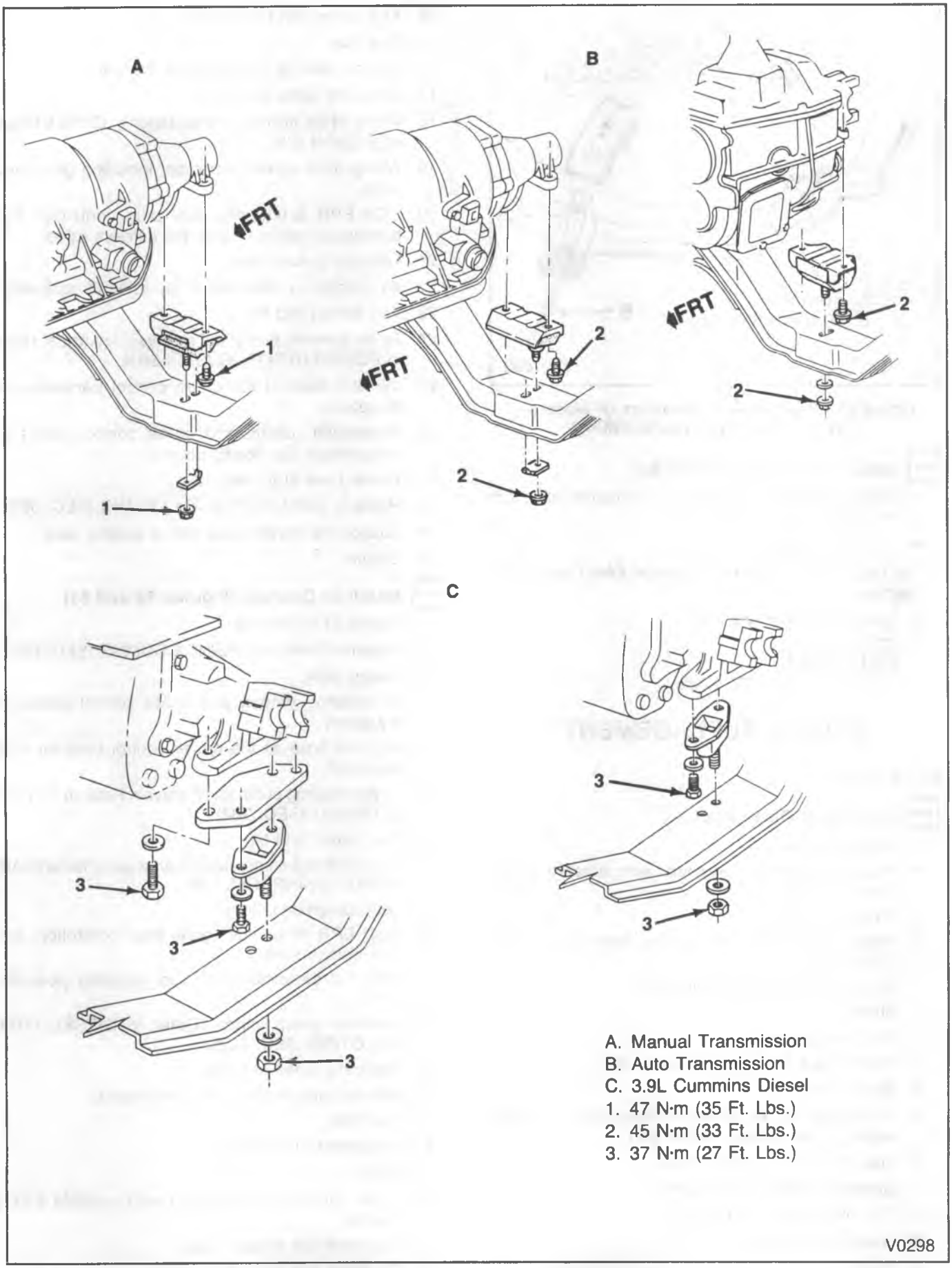

Figure 37—Rear Engine Mountings (P Models—Transmission Tail Type Mountings)

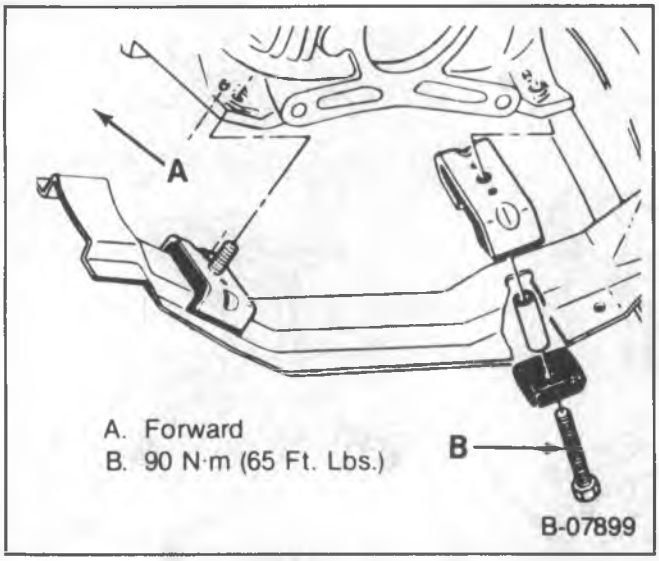

Figure 38—Rear Engine Mountings (P Models—Flywheel Housing Type Mounting)

Install or Connect (Figure 38)

1. Engine mounting. Align the hole in the mounting with the hole in the crossmember.

- Lower the engine.

NOTICE: See "Notice" on page 6A6-1 of this section.

2. Spacer, cushion, and bolt.

Tighten

- Bolt to 90 N•m (65 ft. lbs.).

ENGINE REPLACEMENT

R/V MODELS

Remove or Disconnect

1. Battery cables.

- Raise the vehicle. Support with suitable safety stands.

2. Flywheel cover.
3. Flywheel to torque converter bolts (automatic transmission).
4. Exhaust pipes at the manifolds.
5. Starter.
6. Bell housing bolts.
7. Front engine mounting through-bolts.
8. Block heater.
9. Wiring harness, transmission cooler lines, and front battery cable clamp at the oil pan.
10. Fuel return lines at the engine.
11. Oil cooler lines at the engine.
12. The lower fan shroud bolts.

- Lower the vehicle.

13. Hood.

- Drain the cooling system. Refer to ENGINE COOLING (SEC. 6B1).

14. Air cleaner with resonator.
15. Fuel filter.
16. Ground cable at the generator bracket.
17. Generator wires and clips.
18. Wiring at the injection pump. Refer to DIESEL FUEL INJECTION (SEC. 6C1).
19. Wiring from rocker arm clips, including glow plug wires.
20. EGR-EPR solenoids, glow plug controller and temperature sensor. Move the harness aside.
21. Left side ground strap.
22. Air conditioner compressor, lay aside (if equipped).
23. Fan shroud and fan.
24. Power steering pump and reservoir; lay aside. Refer to POWER STEERING (SEC. 3B3).
25. Vacuum hose at the cruise control transducer (if equipped).
26. Accelerator, detent and cruise control cables (if equipped) at the injection pump.
27. Heater hose at the engine.
28. Radiator. Refer to ENGINE COOLING (SEC. 6B1).

- Support the transmission with a suitable jack.

29. Engine.

Install or Connect (Figures 32 and 33)

1. Engine to the vehicle.
2. Radiator. Refer to ENGINE COOLING (SEC. 6B1).
3. Heater hose.
4. Accelerator, detent, and cruise control cables (if equipped).
5. Vacuum hose at the cruise control transducer (if equipped).
6. Power steering pump and reservoir. Refer to POWER STEERING (SEC. 3B3).
7. Fan shroud and fan.
8. Air conditioner compressor (if equipped). Refer to AIR CONDITIONING (SEC. 1B).
9. Left side ground strap.
10. EGR-EPR solenoids, glow plug controller, and temperature sensor.
11. Wiring at the rocker arm clips, including glow plug wires.
12. Injection pump wiring. Refer to DIESEL FUEL INJECTION (SEC. 6C2).
13. Generator wires and clips.
14. Ground cable at the generator bracket.
15. Fuel filter.
16. Air cleaner and resonator.
17. Hood.

- Raise the vehicle. Support with suitable safety stands.

18. The lower fan shroud bolts.
19. Oil cooler and fuel return lines.
20. Wiring harness, transmission cooler lines, and front battery cable clamp at the oil pan.

21. Block heater.

NOTICE: See "Notice" on page 6A6-1 of this section.

22. Engine mounting through-bolts.

Tighten

- Fasteners to specifications. Refer to figures 32 and 33.

23. Bell housing bolts.
24. Starter.
25. Exhaust pipes.
26. Flywheel to torque converter bolts (automatic transmission).
27. Flywheel cover.

- Lower the vehicle.

28. Battery cables.

- Fill the cooling system with the proper quantity and grade of coolant. Refer to MAINTENANCE AND LUBRICATION (SEC. 0B).

FLYWHEEL REPLACEMENT (MANUAL AND AUTOMATIC TRANSMISSIONS)

Remove or Disconnect (Figure 39)

1. Transmission, flywheel housing, and clutch (if equipped).
2. Flywheel bolts.
3. Flywheel.

Clean

- Mating surfaces of crankshaft and flywheel. Remove any burrs.

Inspect

- Flywheel for burning, scoring, warping, and wear. Replace the flywheel if necessary. Do not machine the flywheel.
- Flywheel ring gear for worn or broken teeth.

Flywheel Ring Gear Replacement

1. Use a torch to heat the gear around the entire circumference, then drive the gear off the flywheel, using care not to damage the flywheel.

NOTICE: Never heat starter gear to red heat as this will change metal structure.

2. Uniformly heat the flywheel gear to temperature which will expand the gear to permit installation. Temperature must not exceed 200°C (392°F).
3. As soon as the gear has been heated, install on the flywheel.

Install or Connect (Figure 39)

1. Flywheel.

NOTICE: See "Notice" on page 6A6-1 of this section.

2. Flywheel bolts.

Tighten

- Flywheel bolts to 90 N•m (65 ft. lbs.).

3. Clutch, (if equipped) flywheel housing, and transmission.

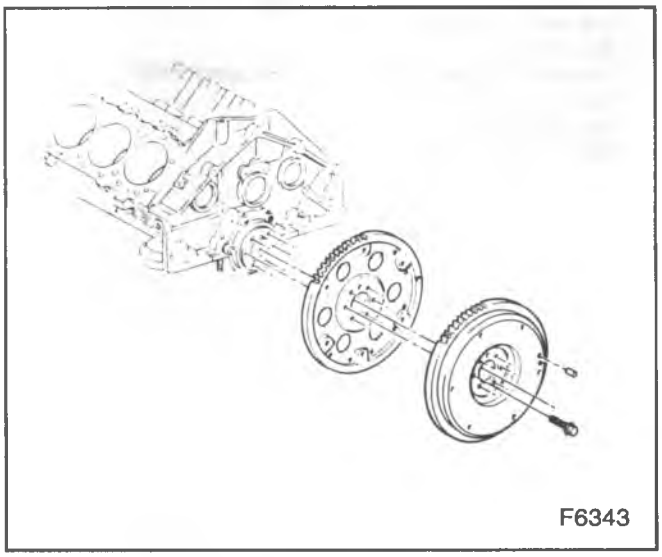

Figure 39—Flywheel

SPECIFICATIONS

FASTENER TORQUE

Item	N·m	Ft. Lbs.	In. Lbs.
Intake Manifold Bolts	42	31	—
Exhaust Manifold Bolts	35	26	—
Rocker Arm Cover Bolts	22	16	—
Rocker Arm Shaft Bolts	55	40	—
Hydraulic Lifter Guide Plate Clamp Bolts	26	18	—
Cylinder Head Bolts — Refer to Procedure	—	—	—
Oil Pump Drive Clamp Bolt	42	31	—
Torsional Damper Bolt	270	200	—
Crankshaft Pulley Bolts	40	30	—
Front Cover to Block Bolts	45	33	—
Oil Pan Bolts (all except rear two bolts)	10	—	89
(rear two bolts)	23	17	—
Front Cover Baffle Bolts and Nut	45	33	—
Injection Pump Nuts	42	31	—
Injection Pump Gear Bolts	23	17	—
Camshaft Gear Bolt	100	75	—
Camshaft Thrust Plate	23	17	—
Oil Pump Bolt	90	65	—
Main Bearing Cap Bolts — Inner	150	110	—
Outer	135	100	—
Connecting Rod Cap Nuts	65	48	—
Glow Plugs	14	—	124
Coolant Crossover/Thermostat Housing Bolts	42	31	—
Fuel Pump to Block	34	25	—
Flywheel Bolts	90	65	—
Bell Housing Bolts	40	30	—

GMTB-3136-2A

SPECIFICATIONS (CONT.)

GENERAL DATA:			
Type			90-degree V8 Diesel
Displacement			6.2L
RPO			LH6, LL4
Bore			101
Stroke			97
Compression Ratio			21.3 : 1
Firing Order			1-8-7-2-6-5-4-3
Oil Pressure			10 psi at idle (hot); 40-45 psi at 2000 RPM
CYLINDER BORE:			
Diameter			100.987-101.065
Out of Round			0.02 (Maximum)
Taper (Thrust Side)			0.02 (Maximum)
PISTON:			
Clearance	Bohn Pistons	Bores 1 through 6	0.089-0.115
		Bores 7 and 8	0.102-0.128
	Zollner Pistons*	Bores 1 through 6	0.112-0.138
		Bores 7 and 8	0.125-0.151
PISTON RING:			
Compression	Groove Clearance	Top	0.076-0.178
		2nd	0.75-1.00
	Gap	Top	0.30-0.55
		2nd	0.75-1.00
Oil	Groove Clearance		0.040-0.096
	Gap		0.25-0.51
PISTON PIN:			
Diameter			30.9961-31.0039
Clearance			0.0081-0.0309
Fit in Rod			0.0081-0.0309
CRANKSHAFT			
Main Journal	Diameter	#1, 2, 3, 4	74.917-74.941
		#5	74.912-74.936
	Taper		0.005 (Maximum)
	Out of Round		0.005 (Maximum)
Main Bearing Clearance	#1, 2, 3, 4		0.045-0.083
	#5		0.055-0.093
Crankshaft End Play			0.10-0.25
Crankshaft	Diameter		60.913-60.939
	Taper		0.005 (Maximum)
	Out of Round		0.005 (Maximum)
Rod Bearing Clearance			0.045-0.100
Rod Side Clearance			0.17-0.63

*Not used in production — reference for service stock pistons only.

GMTB-3114-2A

SPECIFICATIONS (CONT.)

DISPLACEMENT			6.2L
CAMSHAFT:			
Lobe Lift ± 0.05		Intake	7.133
		Exhaust	7.133
Journal Diameter		#1, 2, 3, 4	54.970-55.025
		#5	50.970-51.025
Journal Clearance		#1, 2, 3, 4	0.025-0.118
		#5	0.020-0.113
Camshaft End Play			0.051-0.305
VALVE SYSTEM:			
Lifter			Hydraulic Roller
Rocker Arm Ratio			1.5:1
Valve Lash		Intake	Not Adjustable
		Exhaust	
Face Angle (Intake & Exhaust)			45°
Seat Angle (Intake & Exhaust)			46°
Seat Runout (Intake & Exhaust)			0.05
Seat Width		Intake	0.89-1.53
		Exhaust	1.57-2.36
Stem Clearance		Intake	0.026-0.069
		Exhaust	0.026-0.069
Valve Spring	Pressure Newtons @ mm	Closed	356 N @ 46.0 mm
		Open	1025 N @ 35.3 mm
	Installed Height		46
Timing Chain Free Play		New Chain	12.7 mm (0.500-inch)
		Used Chain	20.3 mm (0.800-inch)

GMTB-0903-2L

SPECIAL TOOLS

1. J 8037

2. J 8080

3. 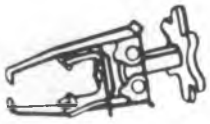 J 38606

4. J 29834

5. 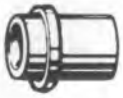 J 22102

6. 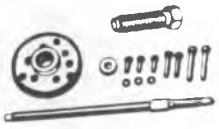 J 23523-E

7. J 26999-10

1. Ring Compressor
2. Main Bearing Replacer
3. Valve Spring Compressor
4. Hydraulic Lifter Remover
5. Seal Installer
6. Torsional Damper Remover
7. Air Line Adapter

V0262

SECTION 6B1

ENGINE COOLING

NOTICE: When fasteners are removed, always reinstall them at the same location from which they were removed. If a fastener needs to be replaced, use the correct part number fastener for that application. If the correct part number fastener is not available, a fastener of equal size and strength (or stronger) may be used. Fasteners that are not reused, and those requiring thread locking compound will be called out. The correct torque value must be used when installing fasteners that require it. If the above conditions are not followed, parts or system damage could result.

CONTENTS

SUBJECT	PAGE
Description	6B1- 1
Diagnosis	6B1- 2
System Checks	6B1- 2
Fan Clutch Diagnosis	6B1- 3
Thermostat Diagnosis	6B1- 3
Coolant Level Indicator Diagnosis	6B1- 4
Cooling System Diagnosis	6B1- 4
Uncommon Cooling System Problems	6B1- 6
On-Vehicle Service	6B1- 7
Flushing the Cooling System	6B1- 7
Coolant Recovery Tank Replacement	6B1- 7
Thermostat Replacement	6B1- 7
Thermostat Housing Crossover Replacement	6B1-10
Drive Belt Replacement	6B1-11
Fan and Fan Clutch Replacement	6B1-20
Auxiliary Cooling Fan Replacement	6B1-20
Coolant Pump Replacement	6B1-22
Engine Oil Cooler, Lines and Hoses	6B1-29
Specifications	6B1-32
Special Tools	6B1-33

DESCRIPTION

All R/V and P-Model vehicles have pressure-type engine cooling systems with thermostatic control of the cooling circulation. The cooling system is sealed by a pressure-type radiator cap that causes the system to operate at higher-than-atmospheric pressure. This higher-pressure operation raises the boiling point of the coolant, increasing the cooling efficiency of the radiator. The 105 kPa (15 psi) pressure cap raises the boiling point of the coolant to approximately 125°C (258°F) at sea level.

The pressure-vacuum valve radiator cap allows the coolant to expand through the pressure valve in the center of the cap without building unnecessary pressure. This expanding coolant flows into the coolant reservoir. The vent valve closes due to expansion and coolant flow (the nominal 105 kPa (15 psi) pressure will not be reached until the system is working at maximum capacity). Any air or vapor in the cooling system will be forced into and out of the coolant reservoir through the vent tube at the top of the reservoir. As the system cools, the extra coolant in the reservoir will be drawn back to the radiator through the vent valve. In this manner, the radiator will keep itself full at all times.

DIAGNOSIS

SYSTEM CHECKS

EXHAUST LEAKS

To check for exhaust leaks into the cooling system, drain the system until the coolant level stands just above the top of the cylinder head(s), then disconnect the radiator upper hose and remove the thermostat and fan belt(s). Start the engine and accelerate several times. At the same time note any appreciable coolant rise or the appearance of bubbles which may indicate that exhaust gases are leaking into the cooling system.

NOTICE: A worn head gasket may allow exhaust gases to leak into the cooling system. This can damage the cooling system as the gases combine with the water to form acids which are harmful to the radiator and engine.

COOLANT PUMP

Check coolant pump operation by running the engine while squeezing the radiator upper hose. When the engine warms, a pressure surge should be felt. Check for a plugged vent hole in the pump.

RADIATOR

Test for restrictions in the radiator by warming the engine and then turning the engine off and feeling the radiator. The radiator should be hot along the left side and warm along the right side, with an even temperature rise from right to left. Cold spots in the radiator indicate clogged sections.

THERMOSTAT

Check the thermostat by hanging the thermostat on a hook in a 33% glycol solution, 25°C (4°F) above the temperature stamped on the thermostat valve. Submerge the valve and agitate the solution; the valve should open. Remove the thermostat and place it in a 33% glycol solution, −12°C (10°F) below the temperature indicated on the valve. Submerge the valve and agitate the solution; the valve should close.

OVERHEAT AND/OR NOISE

Restrictions in the cooling system can cause the engine to overheat and/or create cooling system noise.

Components which could create restrictions are the cylinder head, coolant pump, block thermostat housing and inlet manifold. Symptoms include:

- Engine may make snapping/cracking noises.
- Heater core may gurgle or surge.
- Radiator hoses may collapse and expand.
- Heater hoses may vibrate and thump.
- Overheat light may come on.

Symptoms are the result of coolant boiling at some localized area and may be noticed after extended idling and/or while driving. Determine which side of the engine is involved and whether it is more at the front or rear of the engine.

Diagnosis/Inspection

1. Isolate the problem area by probing the engine with a stethoscope.

CAUTION: The radiator cap should be removed from a cool engine only. If the radiator cap is removed from a hot cooling system, serious personal injury may result.

2. With the engine running and the radiator cap removed, observe the water being circulated in the radiator. Feel the front area of the radiator for cold spots, which indicate blockage. Blocked radiators generally occur on units that have accrued miles and not on new vehicles.
3. Inspect the thermostat to see if it opens.
4. Inspect the thermostat housing to make sure it is free of obstructions.
5. Remove the coolant pump from the vehicle and the back cover on the pump. Inspect internal passages using a flashlight.
6. Inspect the crossover at the front of the inlet manifold. This entire passage can be seen with the thermostat removed.
7. Remove the cylinder heads and check the block.
8. With the coolant pump and heads removed, inspect the coolant passages by using a penlight-type flashlight. Replace the block if a restriction can be seen.
9. If none of the above inspections reveal the problem area, inspect the cylinder heads. Heads with blocked coolant passages generally have more than one area that is blocked. Inspect the heads for signs of overheat discoloration (a dark blue or black area). If more are found, look in the coolant passages for blockage and probe all accessible passages.

Use a relatively large probe, as a small probe such as a tag wire will go through or around a partially blocked area. If nothing is found by visual inspection and probing, inspect the passages for a rough, ragged appearance. The roughest internal passages are probably the ones that are blocked.

Replace a blocked or suspect cylinder head and inspect the replacement head before installation.

FAN CLUTCH DIAGNOSIS

NOISE

Fan noise is sometimes evident under the following normal conditions.

- When the clutch is engaged for maximum cooling.
- During the first few minutes after start-up until the clutch can redistribute the silicone fluid back to the normal disengaged operating condition (after overnight setting).

Fan noise or an excessive roar will generally occur continuously under high engine speed conditions (2500 rpm and up) if the clutch assembly is locked up due to an internal failure. If the fan cannot be rotated by hand or there is a rough grating feel as the fan is turned, replace the clutch. Refer to "Fan and Fan Clutch Replacement" in this section.

LOOSENESS

Check a loose fan assembly for any wear and replace if necessary. Under various temperature conditions a visible lateral movement can be observed at the tip of the fan blade. This is a normal condition due to the type of bearing used. Approximately 6.5 mm (1/4-inch) maximum lateral movement measured at the fan tip is allowable. This is not cause for replacement.

SILICONE FLUID LEAKS

The fan clutch operation is generally not affected by small fluid leaks which may occur in the area around the bearing assembly. If leakage appears excessive, replace the fan clutch. Refer to "Fan and Fan Clutch Replacement" in this section.

ENGINE OVERHEATING

If the fan and clutch assembly free-wheel with no drag (revolves more than five times when spun by hand), replace the clutch. Refer to "Fan and Fan Clutch Replacement" in this section.

THERMOSTAT DIAGNOSIS

Refer to the thermostat diagnostic chart for thermostat diagnosis procedures (figure 1).

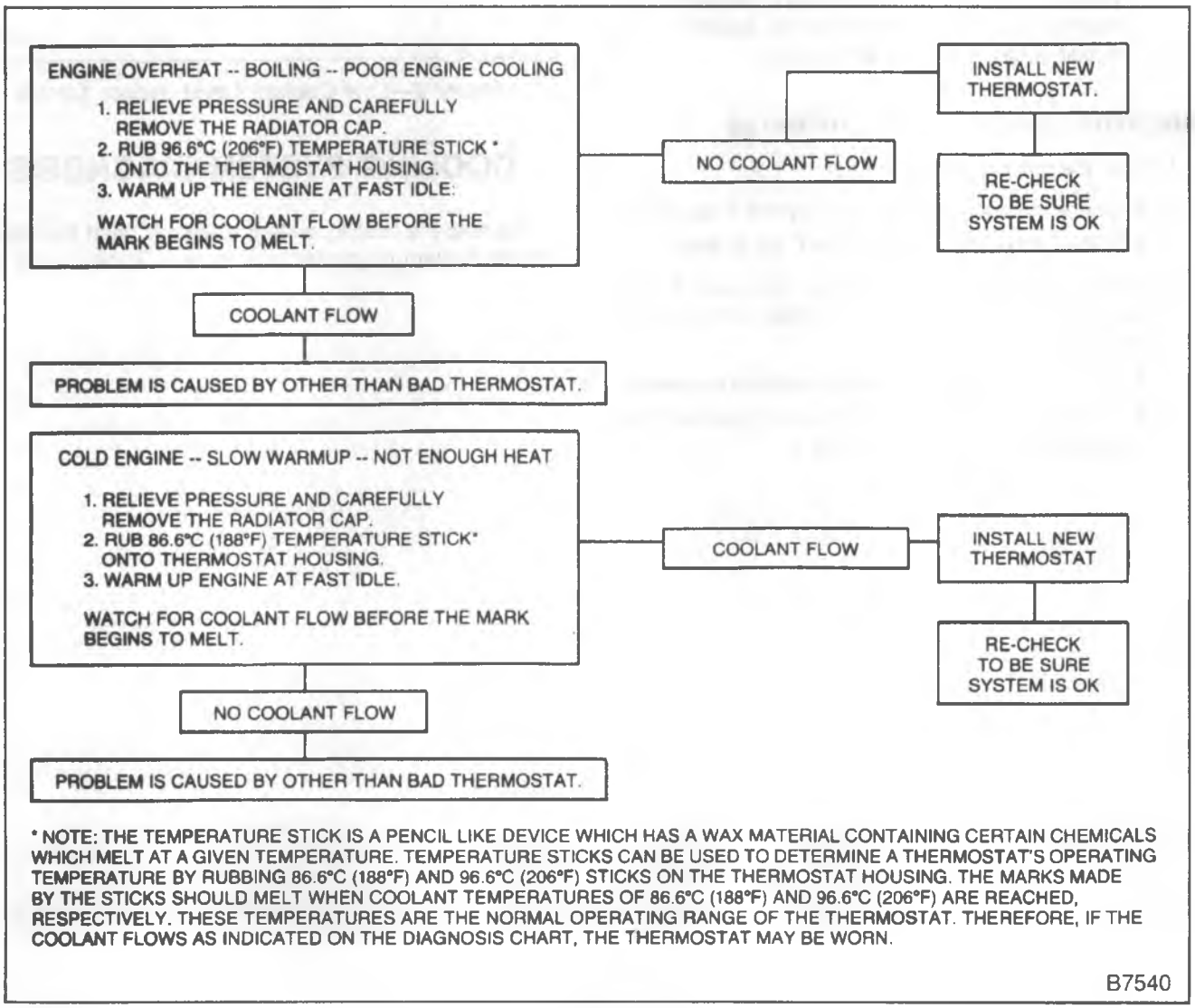

Figure 1—Thermostat Diagnosis Chart

COOLANT LEVEL INDICATOR DIAGNOSIS

The coolant level indicator circuit is shown in figure 2.

INDICATOR LAMP WILL NOT ILLUMINATE

1. Turn the ignition switch to the "ON" position.
   - If the lamp illuminates, the lamp is OK and the connector is properly installed on the module. Go to Step 2.
   - If the lamp does not illuminate, check the bulb, socket and wiring between the socket and the module connector, as well as the connector on the module. Replace or repair as required.
2. Turn the ignition switch to the "ON" position and disconnect the electrical lead at the coolant level sensor on the radiator.
   - If the lamp fails to illuminate, check the wiring between the coolant level sensor connector and the module for a short circuit to ground. If the circuit is OK, replace the module.

INDICATOR LAMP REMAINS ILLUMINATED

1. Turn the ignition switch to ON.
   - Check the coolant level. Add coolant if necessary.
   - If the lamp remains illuminated, go to Step 2.
2. Disconnect the electrical lead at the coolant level sensor on the radiator (use a jumper wire and "G" type electrical connector).
   - If the lamp does not illuminate, replace the sensor.
   - If the lamp remains illuminated, connect the electrical lead and go to Step 3.
3. Check for an open circuit between the sensor and the module.
   - If an open circuit is found, repair it.
   - If no open circuit is found, replace the module.

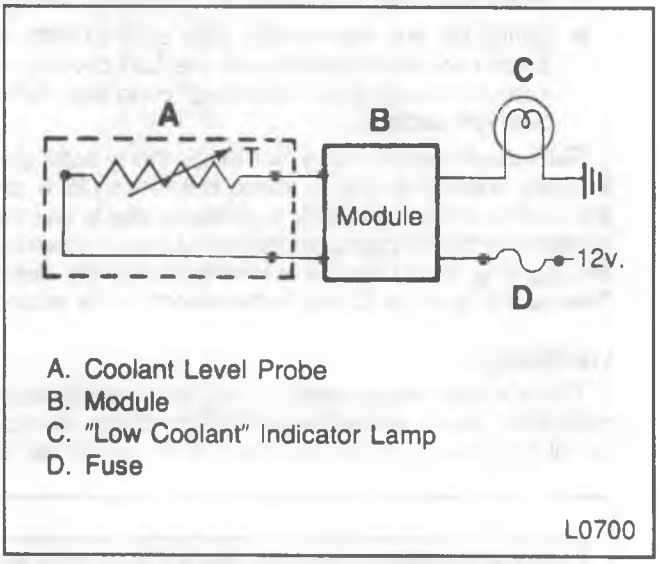

Figure 2—Low Coolant Level Sensor Circuit

COOLING SYSTEM DIAGNOSIS

Refer to the cooling system diagnosis chart for detailed cooling system diagnostic procedures (figures 3 and 4).

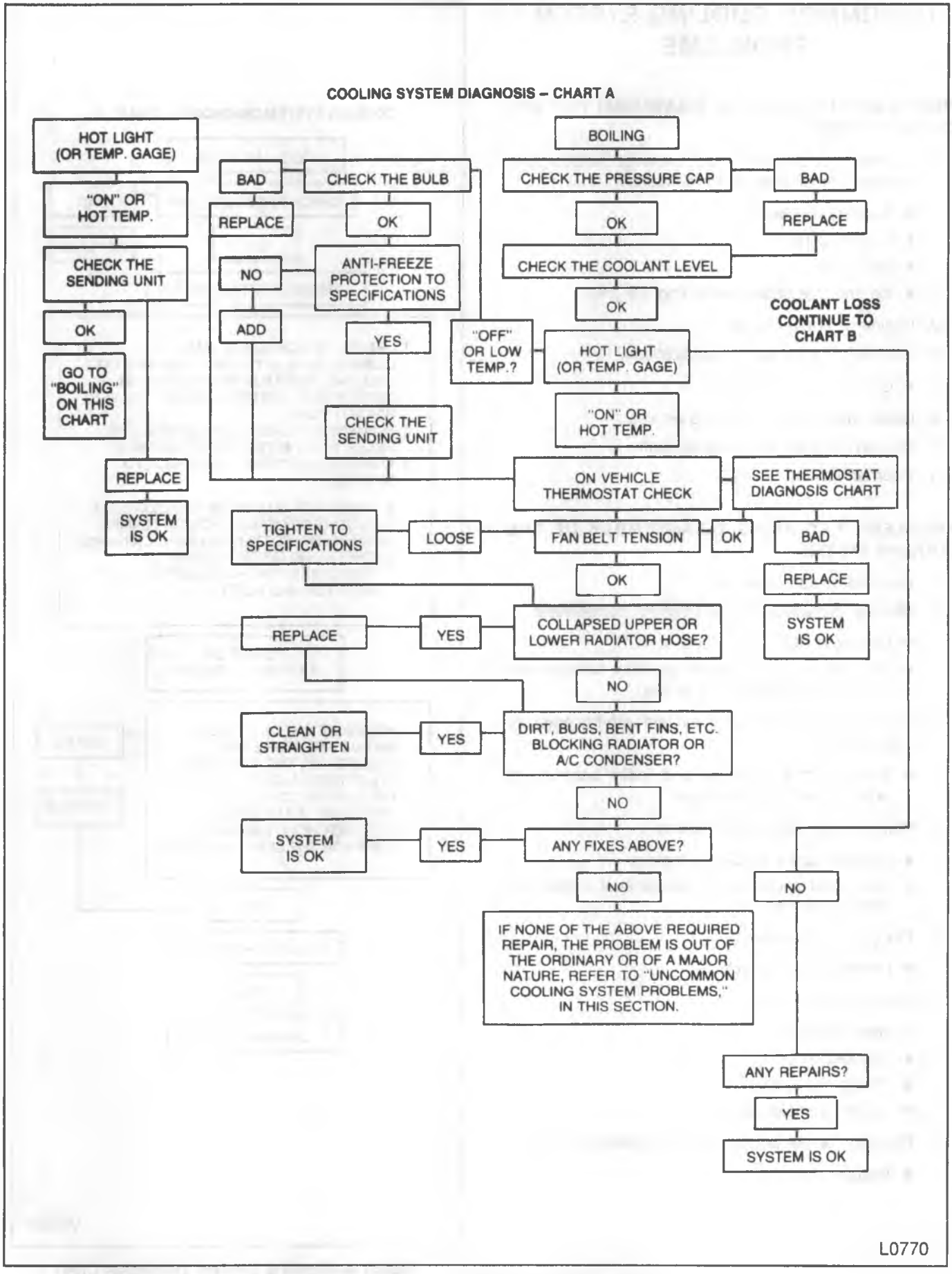

Figure 3—Cooling System Diagnosis Chart

UNCOMMON COOLING SYSTEM PROBLEMS

PROBLEMS NOT REQUIRING DISASSEMBLY OF THE COOLING SYSTEM

1. Locate and remove large external obstructions blocking the radiator or the condenser.
   - Auxiliary oil cooler.
   - License plate.
   - Spare tires.
   - Ice, mud, or snow obstructing the grille.
2. Engine oil is over-filled.
3. Incorrect radiator for the applications.
   - Check the part number.
4. Loose, damaged, or missing air seals.
5. Missing or damaged lower air baffle.
6. Incorrect ignition timing.

PROBLEMS REQUIRING DISASSEMBLY OF THE COOLING SYSTEM

1. Incorrect or damaged fan.
2. Worn or damaged emission system components.
   - Damaged PCV valve, TVS or TCS.
   - Malfunctioning emission system components could cause overheating at idle.
3. Pressure-check the cooling system with the pressure cap installed.
   - Shows if the pressure cap leaks because of radiator filler neck damage.
4. Worn or damaged coolant pump.
   - Impeller vanes eroded or broken.
   - Worn or damaged bearing and/or seal — check for shaft or bearing play.
5. Plugged radiator tubes.
   - Perform a flow check.
6. Internal system leaks.
   - Head gasket.
   - Cracked block.
   - Timing chain cover.
   - Intake manifold gasket.
7. Plugged coolant passages in the cylinder heads.
   - Visual check.

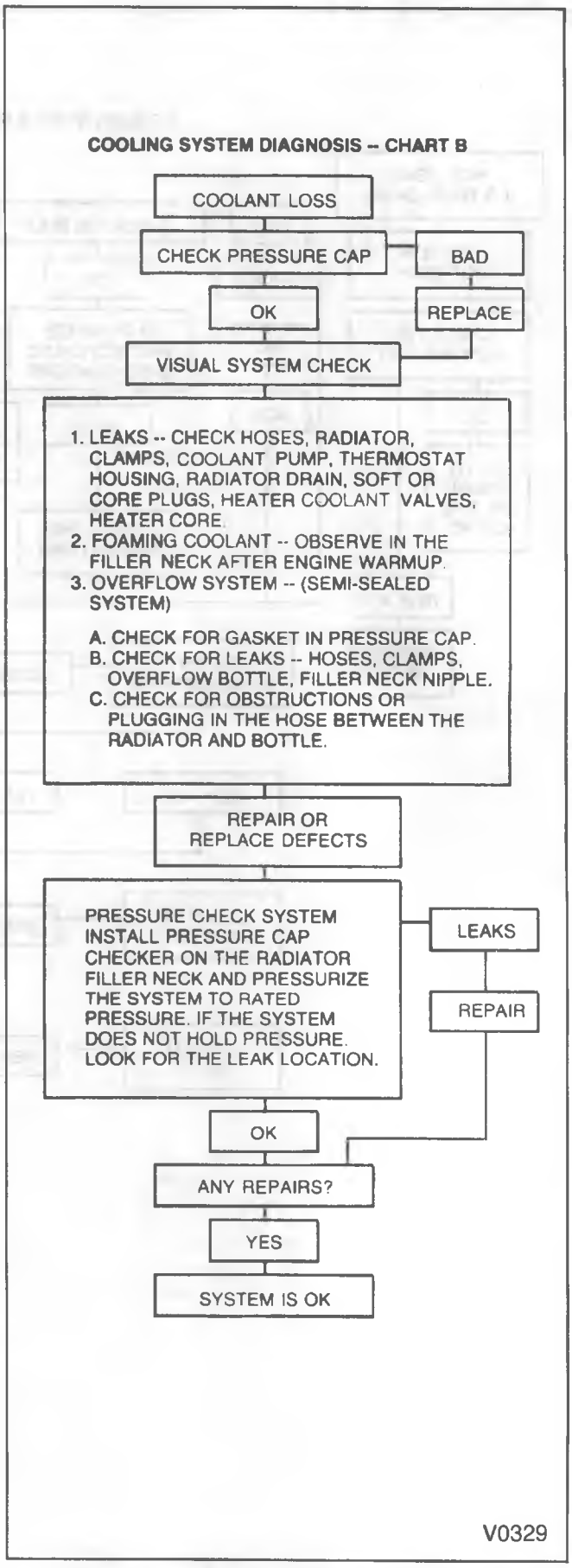

Figure 4—Cooling System Diagnosis Chart

ON-VEHICLE SERVICE

FLUSHING THE COOLING SYSTEM

Various methods and equipment can be used to flush the cooling system. If special equipment is used, follow the equipment manufacturer's instructions.

Important

- Remove the thermostat before flushing the cooling system.

COOLANT RECOVERY TANK REPLACEMENT

Remove or Disconnect (Figures 5 and 6)

1. Negative battery cable.
2. Coolant from the recovery tank (1).
3. Coolant overflow hose from the recovery tank (1).
4. Coolant recovery tank (1) from the vehicle.
   - Bolt/screw (2).

Install or Connect (Figures 5 and 6)

NOTICE: See "Notice" on page 6B1-1 of this section.

1. Coolant recovery tank (1) to the vehicle.
   - Bolt or screw (2).

Tighten

- Bolt or screw (2) to 2.0 N•m (1.5 in. lbs.).

2. Coolant overflow hose to the recovery tank (1).
3. Coolant to the recovery tank (1).
4. Negative battery cable.

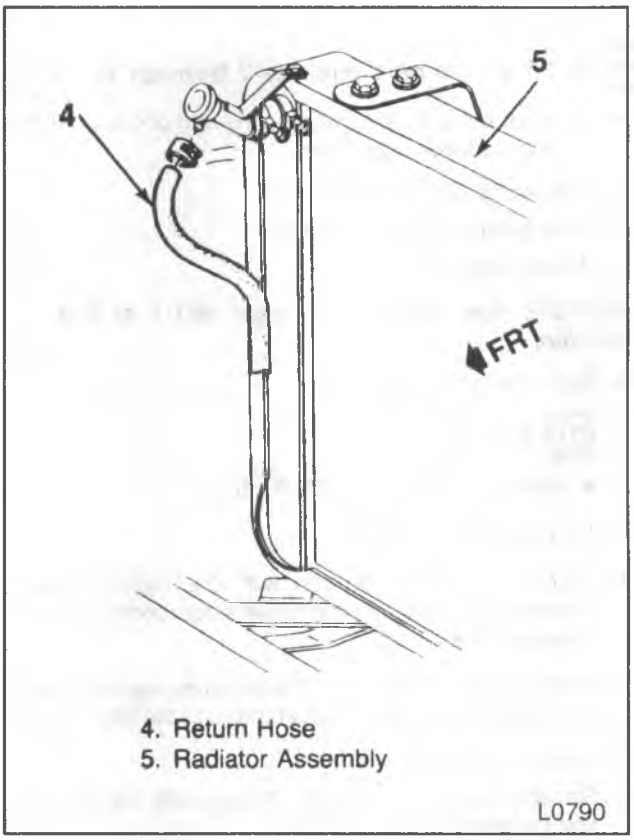

Figure 6—Coolant Recovery Return Hose (P Models)

THERMOSTAT REPLACEMENT

VEHICLES EXCEPT THOSE WITH 6.2L ENGINE

Remove or Disconnect (Figures 7 through 9)

1. Negative battery cable.
   - Drain the cooling system until the radiator coolant level is below the thermostat.

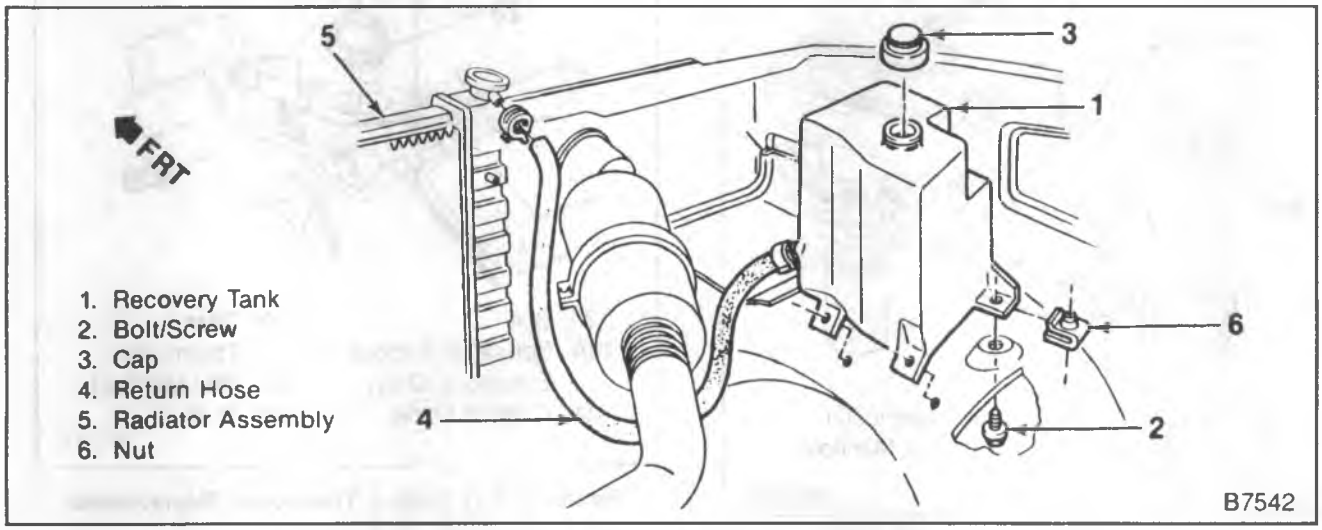

Figure 5—Coolant Recovery System (R/V Models)

2. Bolts (20), coolant outlet (21) and ground wire.
3. Thermostat (23) from its housing.
4. Gasket (22).

Install or Connect (Figures 7 through 9)

- Make sure the thermostat housing and coolant outlet sealing surfaces are clean.

1. Thermostat (23) in its housing.
2. New gasket (22) into position.
3. Water outlet (21).

NOTICE: See "Notice" on page 6B1-1 of this section.

4. Bolts (20) and ground wire.

Tighten

- Bolts (20) to 27 N•m (20 ft. lbs.).

- Fill the cooling system.
- Start the engine and run with the radiator cap removed until the radiator upper hose becomes hot (thermostat is open).
- With the engine idling, add coolant to the radiator until the coolant level reaches the bottom of the filler neck.

5. Negative battery cable.
6. Radiator cap to the radiator, making sure the arrows line up with the overflow tube.

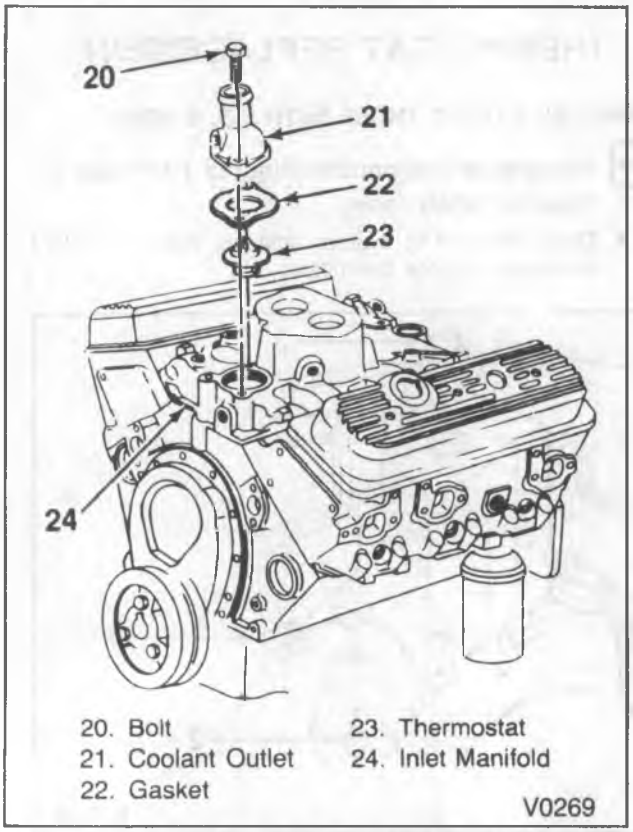

Figure 7—4.3L Engine Thermostat Replacement

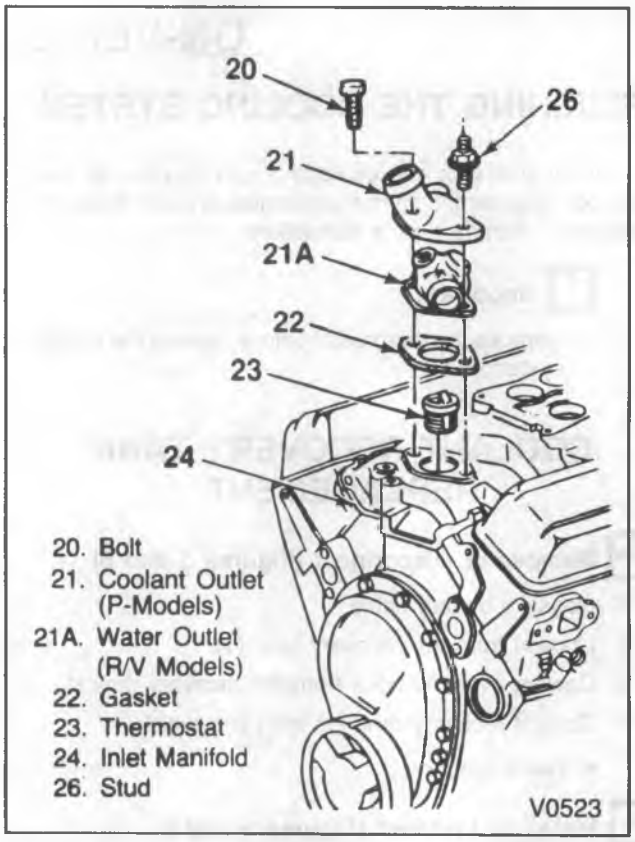

Figure 8—5.0L/5.7L Engine Thermostat Replacement

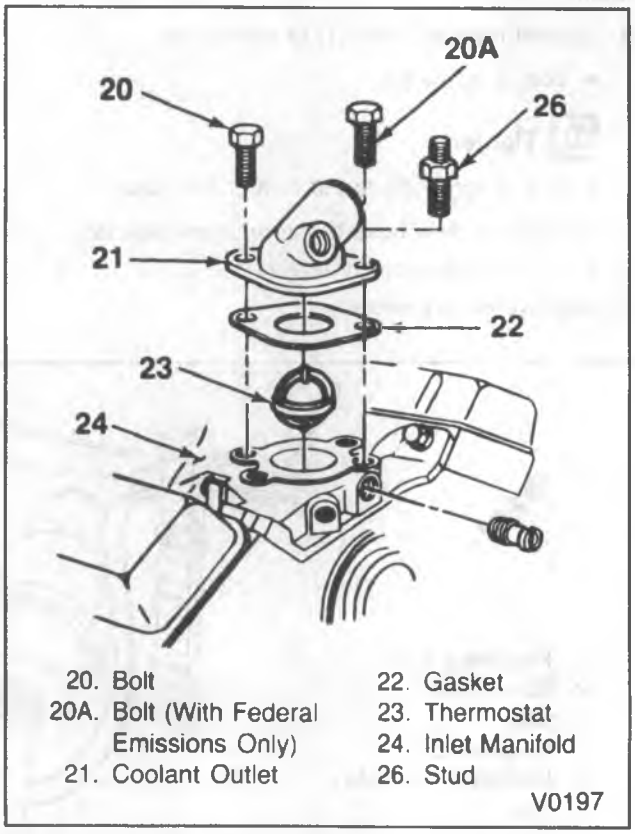

Figure 9—7.4L Engine Thermostat Replacement

VEHICLES WITH 6.2L ENGINE

Remove or Disconnect (Figures 10 and 11)

1. Negative battery cable.

- Drain the cooling system until the radiator coolant level is below the thermostat.

2. Studs (26) and the coolant outlet (21).
3. Upper radiator inlet hose.
4. Thermostat from its housing.
5. Gasket (22).

Install or Connect (Figures 10 and 11)

- Make sure the thermostat housing and coolant outlet sealing surfaces are clean.

1. Thermostat (23) into its housing.
2. Gasket (22) into position.
3. Coolant outlet (21).

NOTICE: See "Notice" on page 6B1-1 of this section.

4. Studs (26) and upper radiator inlet hose.

Tighten

- Studs (26) to 47 N•m (35 ft. lbs.).

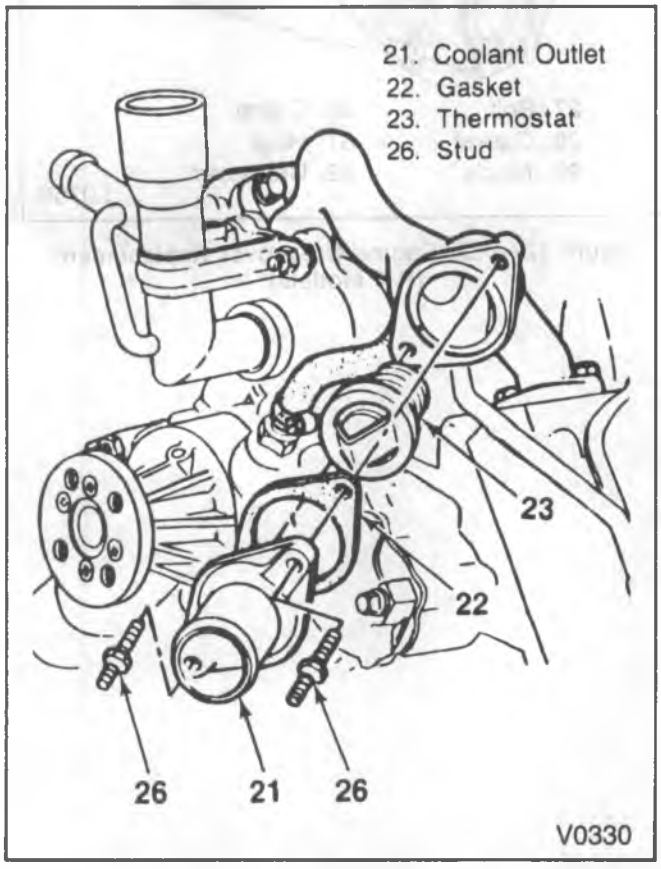

Figure 10—6.2L Engine Thermostat Replacement (R/V Models)

5. Negative battery cable.

- Fill the cooling system.
- Start the engine and run with the radiator cap removed until the radiator upper hose becomes hot (thermostat is open).
- With the engine idling, add coolant to the radiator until the coolant level reaches the bottom of the filler neck.

6. Radiator cap to the radiator, making sure the arrows line up with the overflow tube.

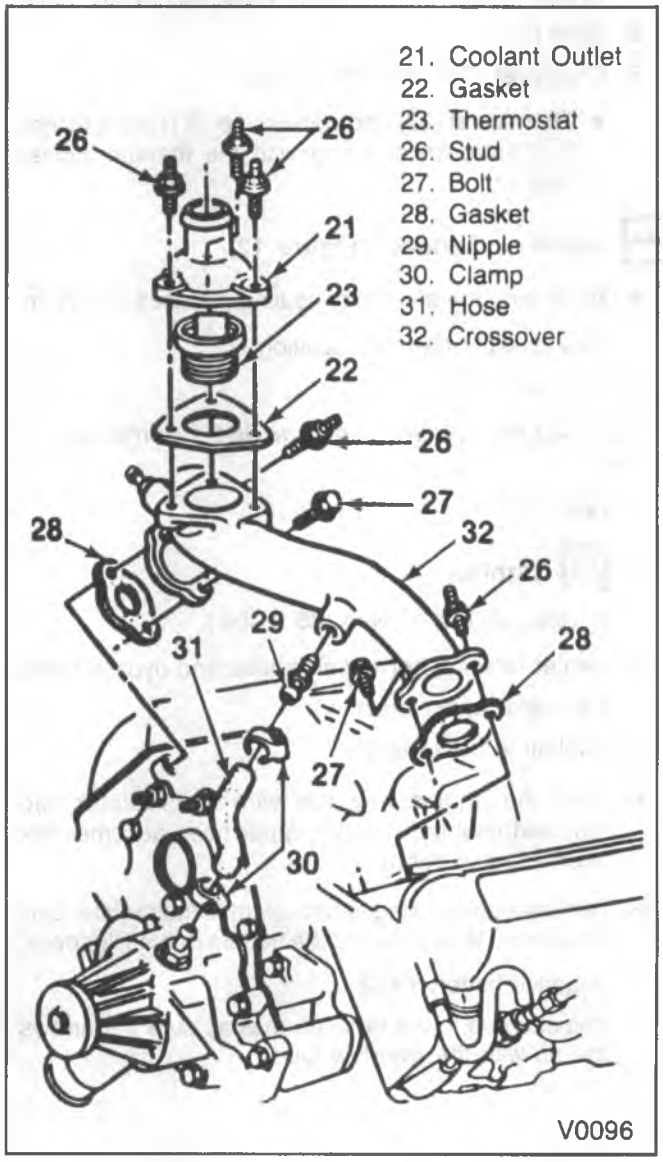

Figure 11—6.2L Engine Thermostat Replacement (P Models)

THERMOSTAT HOUSING CROSSOVER REPLACEMENT

R/V VEHICLE WITH 6.2L ENGINE

Remove or Disconnect (Figure 12)

1. Negative battery cable.
2. Coolant from the radiator.
3. Generator upper bracket.
4. Bypass hose, upper radiator hose and heater hose.
5. Bolts (27).
6. Crossover (32) from the vehicle.
   - Thermostat (23) and water outlet (21) are attached to the crossover along with the thermal bypass nipple.

Install or Connect (Figure 12)

- Make sure the crossover sealing surfaces are clean.

1. New gaskets (28) into position.
2. Crossover (32).

NOTICE: See "Notice" on page 6B1-1 of this section.

3. Bolts (27).

Tighten

- Bolts (27) to 47 N•m (35 ft. lbs.).

4. Heater hose, upper radiator hose and bypass hose.
5. Generator upper bracket.
6. Coolant in the radiator.

- Start the engine and run with the radiator cap removed until the radiator upper hose becomes hot (thermostat is open).
- With the engine idling, add coolant to the radiator until the coolant level reaches the bottom of the filler neck.

7. Negative battery cable.
8. Radiator cap to the radiator, making sure the arrows line up with the overflow tube.

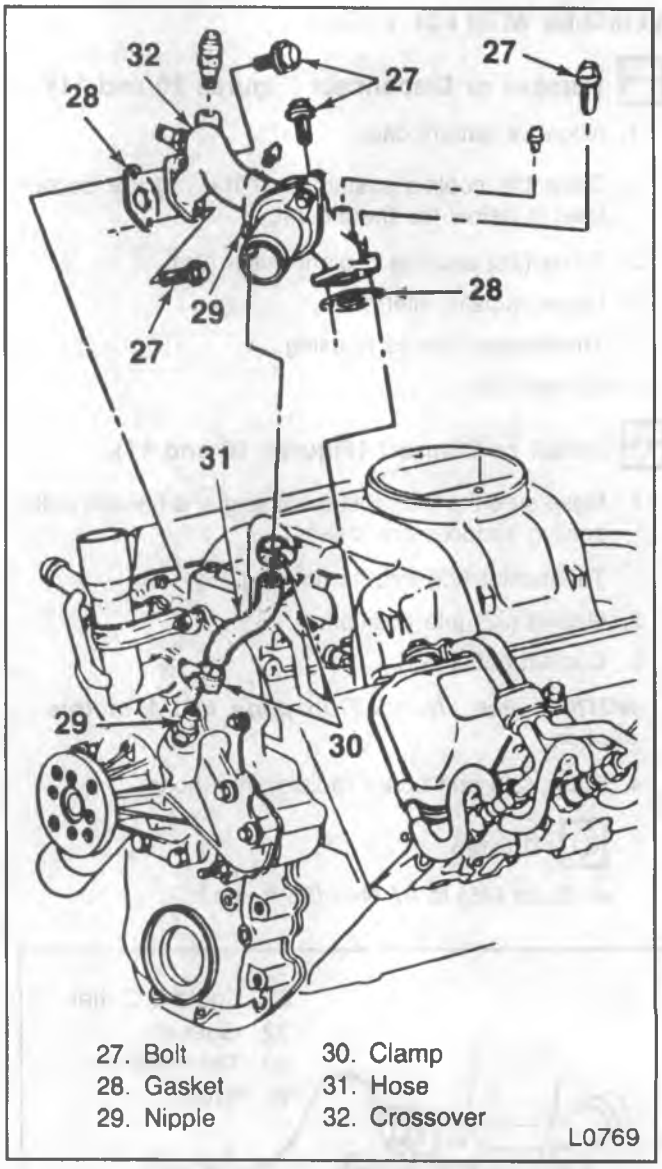

Figure 12—6.2L Engine Crossover Replacement (R/V Models)

P-MODELS WITH 6.2L ENGINES

Remove or Disconnect (Figure 11)

1. Negative battery cable.
2. Coolant from the radiator.
3. Air cleaner.
4. Air cleaner resonator and bracket.
5. Generator upper bracket.
6. Bypass hose, upper radiator hose and heater hose.
7. Bolts (27), studs (26) and gasket (28).
8. Crossover (32).
   - Thermostat (23) and the coolant outlet (21) are attached.

Install or Connect (Figure 11)

- Make sure the crossover sealing surfaces are clean.

1. New gaskets (28) into position.
2. Crossover (32).

NOTICE: See "Notice" on page 6B1-1 of this section.

3. Bolts (27) and studs (26).

Tighten

- Bolts (27) to 47 N•m (35 ft. lbs.).
- Studs (26) to 47 N•m (35 ft. lbs.).

4. Heater hose, upper radiator hose and bypass hose.
5. Generator upper bracket.
6. Air cleaner resonator and bracket.
7. Air cleaner.
8. Negative battery cable.
9. Coolant in the radiator.

- Start the engine and run with the radiator cap removed until the radiator upper hose becomes hot (thermostat is open).
- With the engine idling, add coolant to the radiator until the coolant level reaches the bottom of the filler neck.

10. Radiator cap to the radiator, making sure the arrows line up with the overflow tube.

DRIVE BELT REPLACEMENT

PULLEY INSPECTION

Examine the pulleys for chips, nicks, tool marks, cracks, bent sidewalls, corrosion or other damage.

1. Place a straightedge or position a cord across the two pulleys so they touch at all points (figure 13).
2. Turn each pulley one half revolution and recheck with a straightedge or cord. Full contact at all points must be made. If contact is not made at all points, the pulley may be warped or its shaft could be bent. Replace any damaged parts.

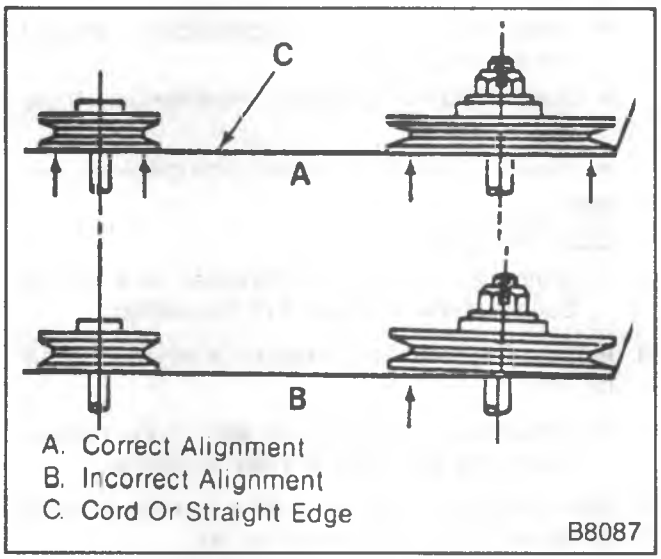

Figure 13—Checking the Pulley Alignment

DRIVE BELT INSPECTION — V-BELTS

Replace frayed or cracked belts and tension to the proper specifications. Do not use drive belt dressings to extend the belt life.

NOTICE: Avoid over or under-tightening drive belts. Loose belts result in slippage which can cause belt and pulley "glazing" and inefficient compound operation. Once a belt has become "glazed", replace the belt. Loose belts can also place high impact loads on driven component bearings due to the whipping action of a loose belt. Over tightening belts can lead to bearing damage and early belt failure.

DRIVE BELT REPLACEMENT — V-BELT

1. Remove the old belt.

- Loosen the component driven by the belt (figures 14 through 19).

NOTICE: Place the belts into the pulley grooves by hand. Do not force a belt into a pulley groove by prying with a screwdriver, crowbar, or other wedge-type tool. Prying a belt into position can damage both the belt and the belt drive components.

NOTICE: See "Notice" on page 6B1-1 of this section.

2. Install the new belt.
   - Tension the new belt to "Specifications" at the end of this section.
   - Use J 23600-B to measure V-belt tension (figure 20).
   - Place the gage at the center of the greatest span.

Tighten

- Component to mounting bracket fasteners to "Specifications" at the end of this section.

3. Run the engine at idle speed for a minimum of 15 minutes.
   - This allows the belt to seat itself in the pulleys, causing the belt fibers to relax or stretch.
4. Allow the drive belt to cool until it is, at most, warm to the touch; the belt should not be hot.

NOTICE: A used belt is one that has been rotated at least one complete revolution on the engine pulleys. This begins the "seating" of the belt and it must never be tightened to new belt specifications.

5. Check the belt tension.
   - Use J 23600-B to measure V-belt tension (figure 20).
   - Place the gage at the center of the greatest span.
   - The belt tension should be at the maximum used belt specifications. Refer to "Specifications" at the end of this section.

DRIVE BELT ADJUSTMENT — V-BELT

Never tension a used belt to more than its specified tension limit.

1. Check the belt tension.
   - Belt should be cool or, at most, warm to the touch; the belt should not be hot.
   - Use J 23600-B to measure V-belt tension (figure 20).
   - Place the gage at the center of the greatest span.
   - If the belt is below the minimum "Used Belt" tension specification, adjust the belt. Refer to "Specifications" at the end of this section.
2. Loosen the component in its mounting bracket (figures 14 through 19).

NOTICE: See "Notice" on page 6B1-1 of this section.

3. Tension the belt to the maximum used belt specifications. Refer to "Specifications" at the end of this section.

Tighten

- Component to mounting bracket fasteners to "Specifications" at the end of this section.

4. Run the engine at idle for a minimum of 15 minutes.

- This allows the belt to reseat itself in the pulleys.

5. Allow the drive belt to cool until it is, at most, warm to the touch; the belt should not be hot.
6. Check the belt tension.
   - Use J 23600-B to measure V-belt tension (figure 20).
   - Place the gage at the center of the greatest span.
   - Readjust if not within the used belt specifications. Refer to "Specifications" at the end of this section.

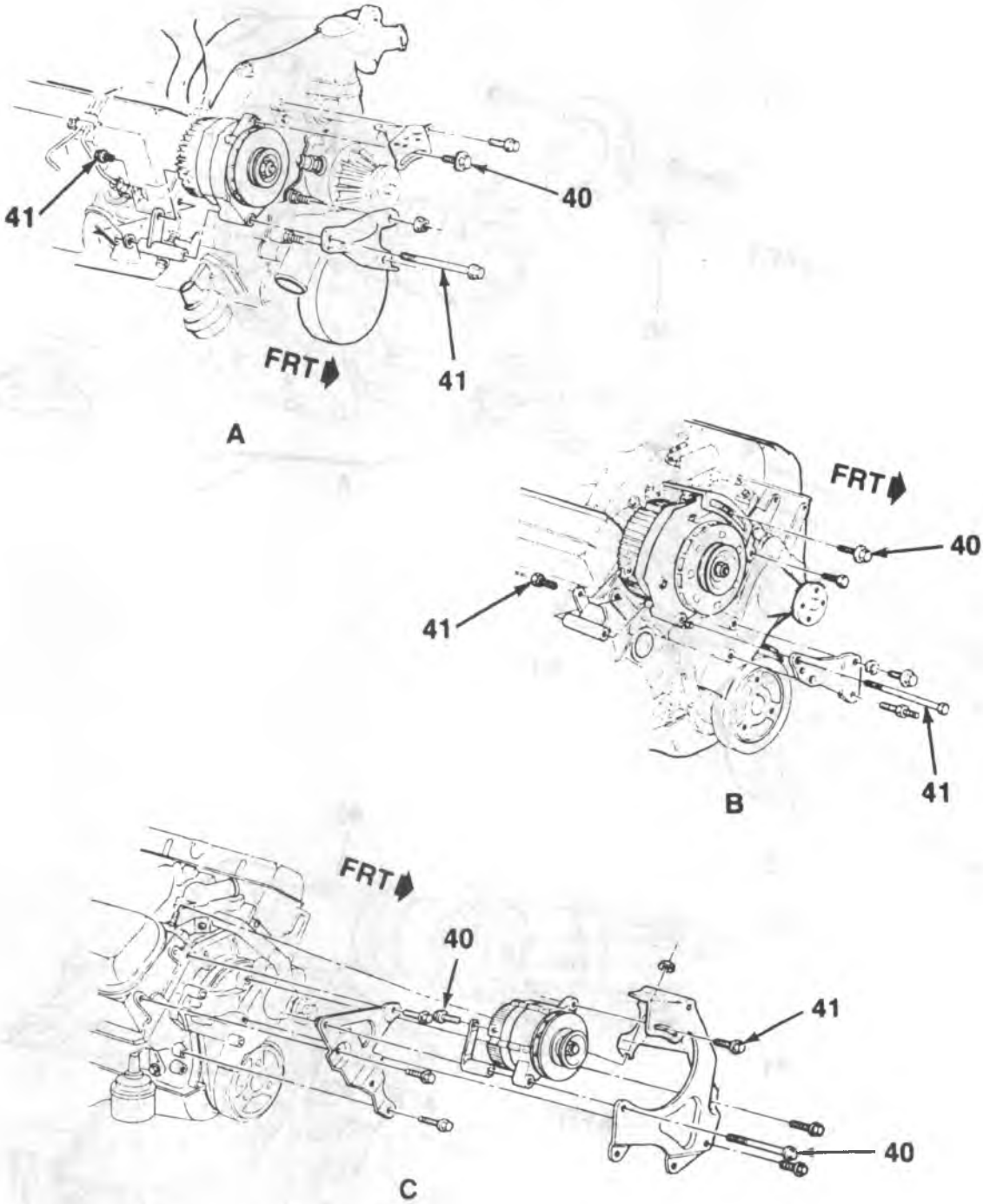

A. 6.2L V8 Diesel
B. 4.3L V6/5.0L V8/5.7L V8
C. 7.4L V8
40. Adjustment Bolt
41. Pivot Bolt

F7502

Figure 14—Generator Mounting (R/V Models)

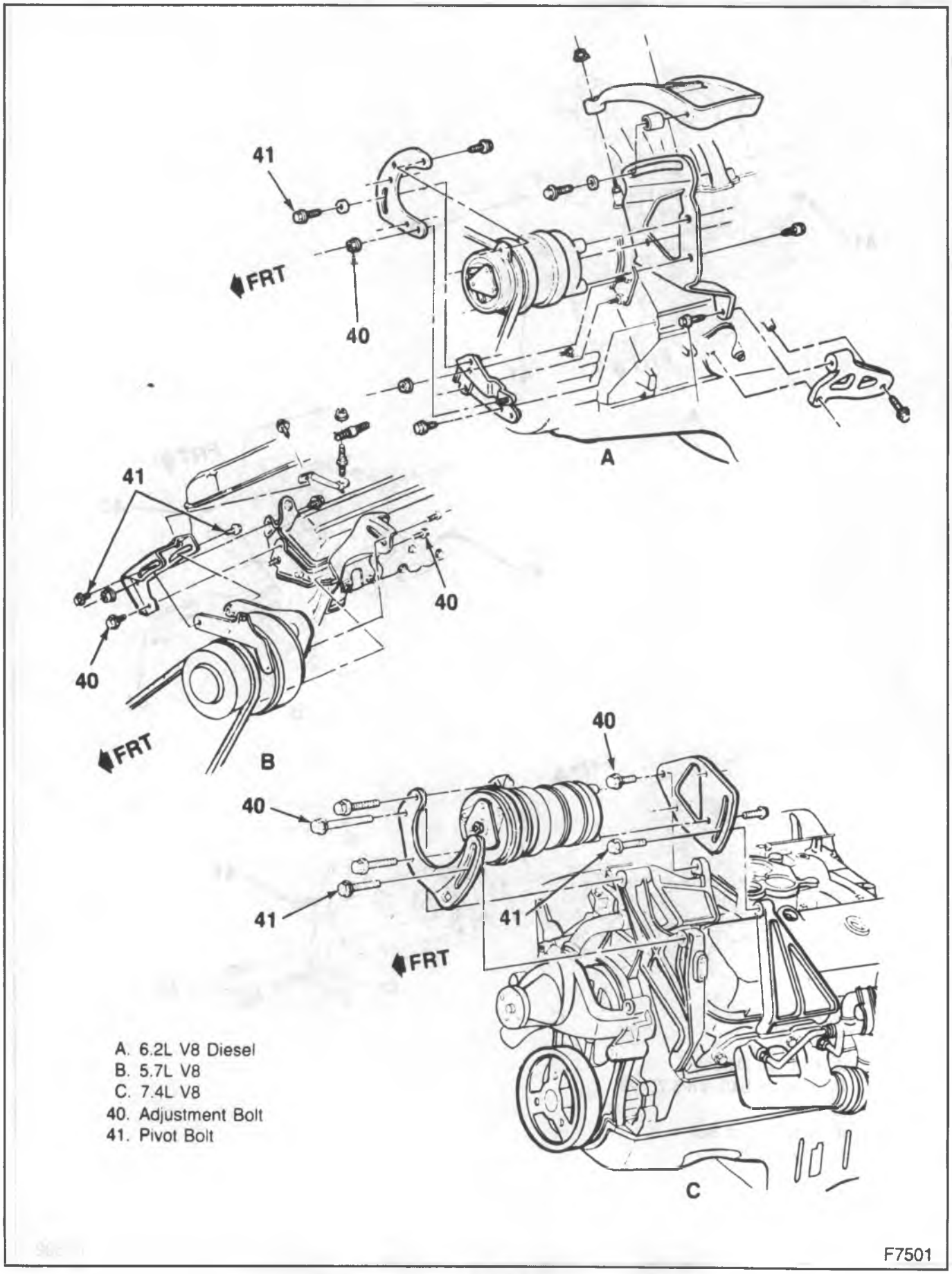

Figure 15—A/C Compressor Mounting (R/V Models)

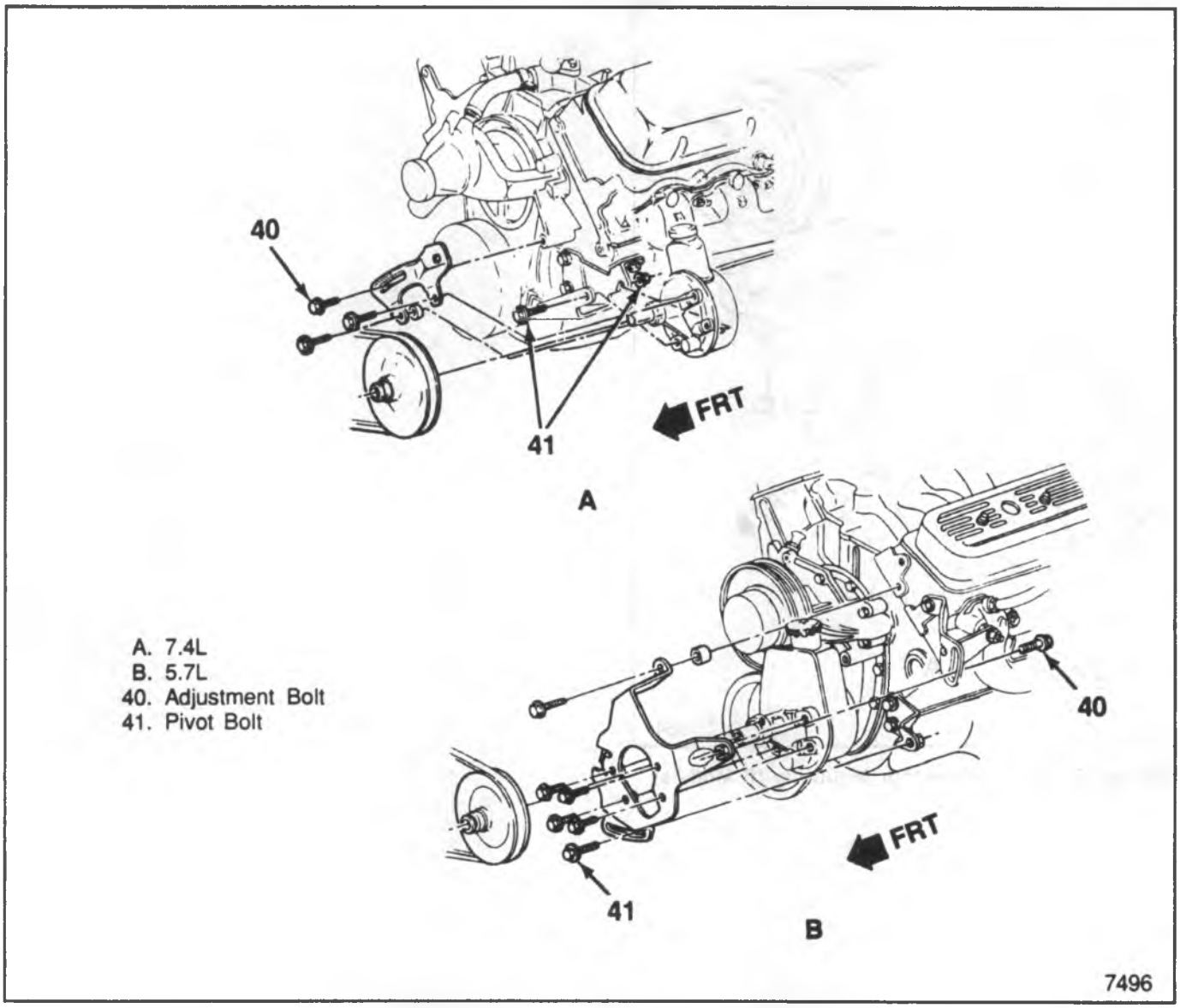

A. 7.4L
B. 5.7L
40. Adjustment Bolt
41. Pivot Bolt

Figure 16—Power Steering Pump Mounting (R/V Models)

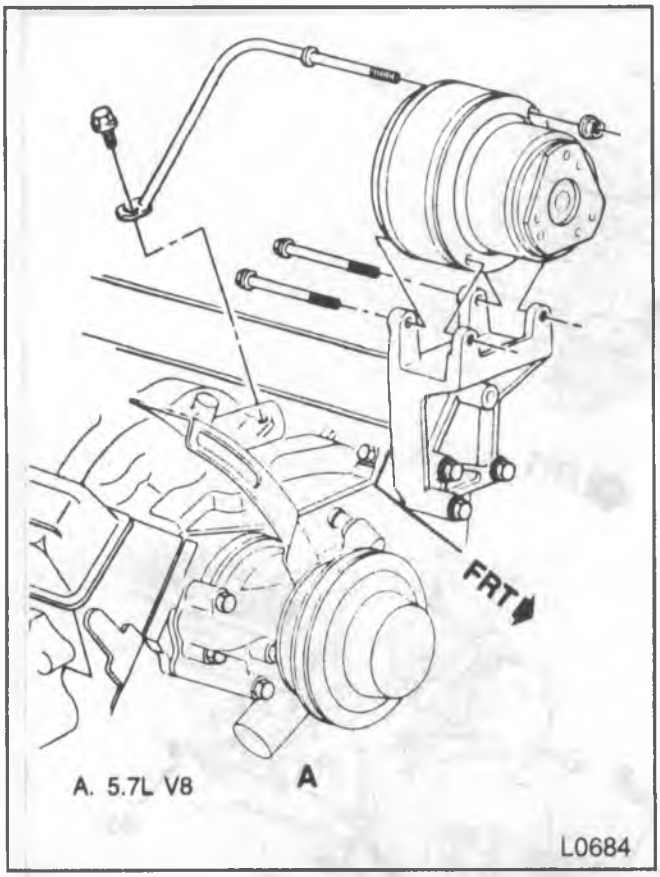

Figure 17—A/C Compressor Mounting (P Models)

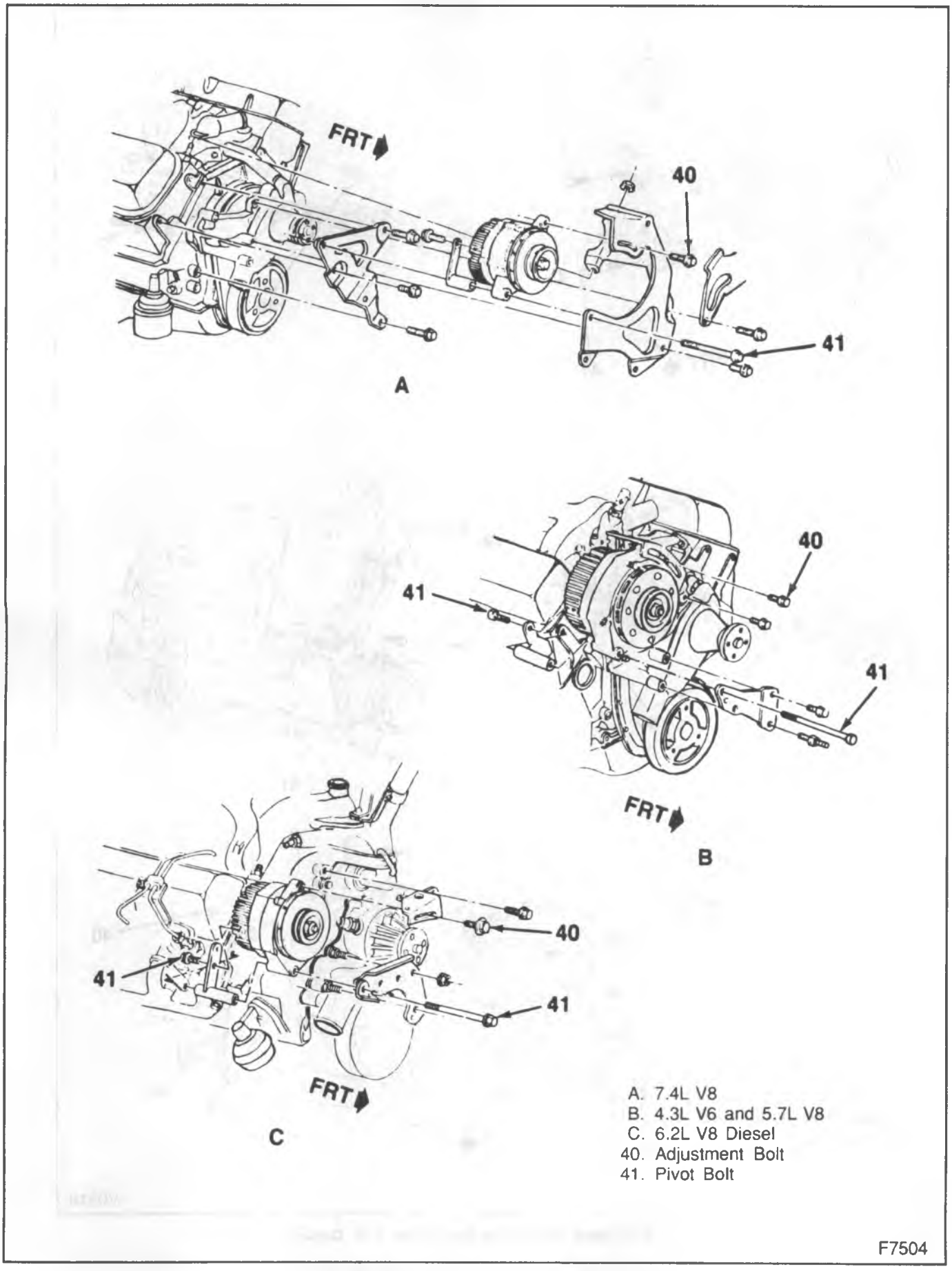

Figure 18—Generator Mounting (P Models)

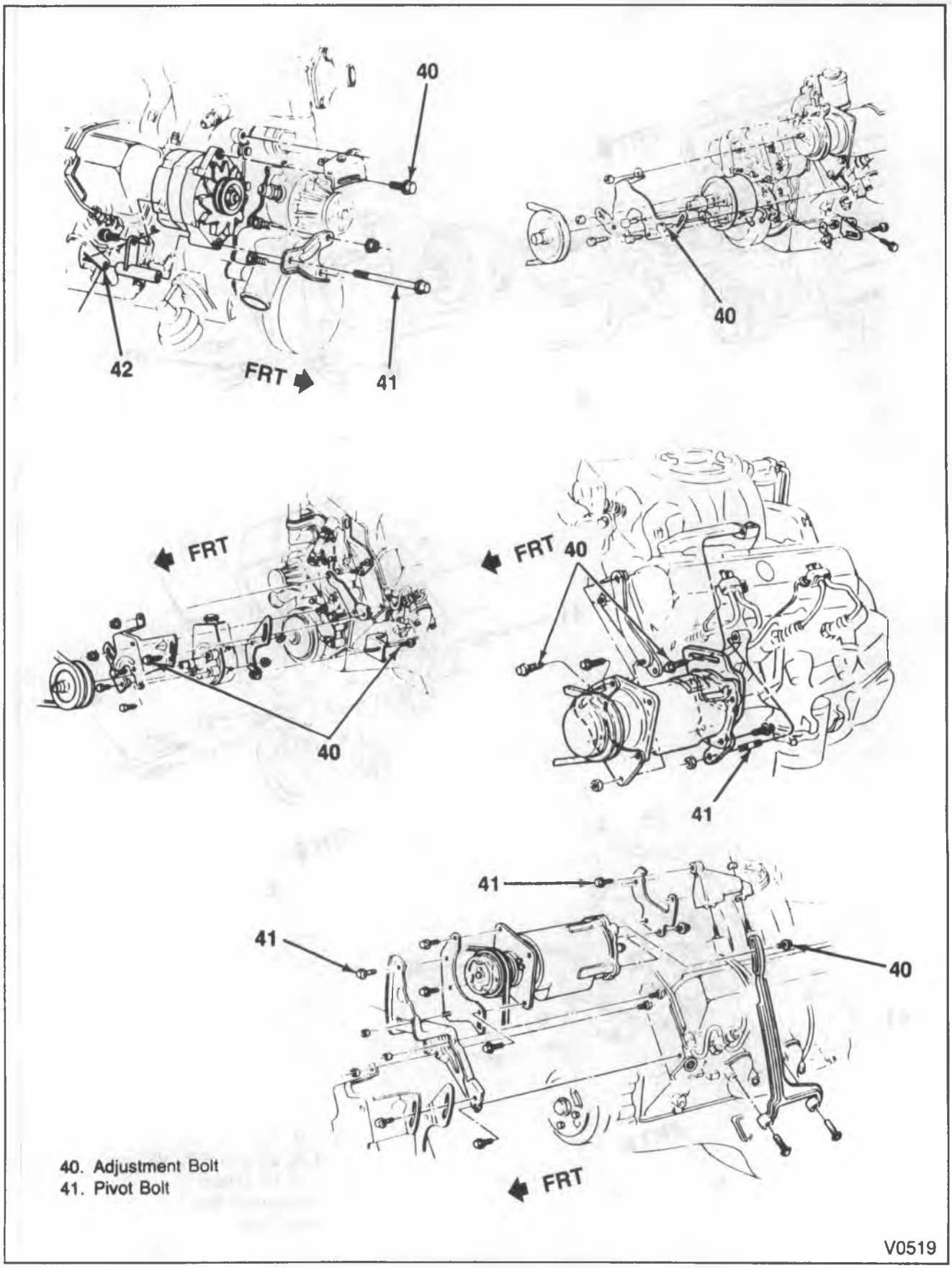

Figure 19—Engine Accessory Mounting—6.2L Diesel

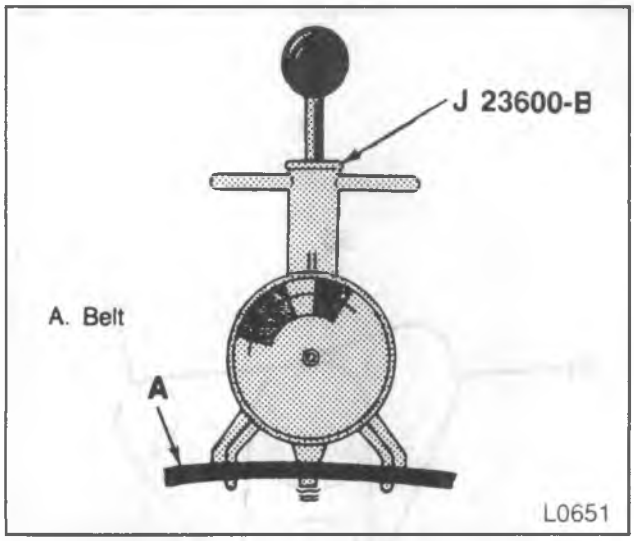

Figure 20—Checking Drive Belt Tension

DRIVE BELT ROUTING

Refer to the drive belt routing diagrams if belt replacement becomes necessary. Refer to figures 21 through 25.

DRIVE BELT REPLACEMENT — SERPENTINE BELT

1. Remove the old belt.
   - With a socket and breaker bar, release the tension by turning the tensioner pulley assembly. The tensioner pulley is spring-activated and it can be turned to the left or right to apply or release the pulley tension.
2. Install a new belt.
   - Thread the belt around the pulleys.
   - With a breaker bar apply the tension by turning the tensioner pulley assembly.

DRIVE BELT ROUTING — SERPENTINE BELT

Refer to drive belt routing diagrams if belt replacement becomes necessary (figures 21 through 25).

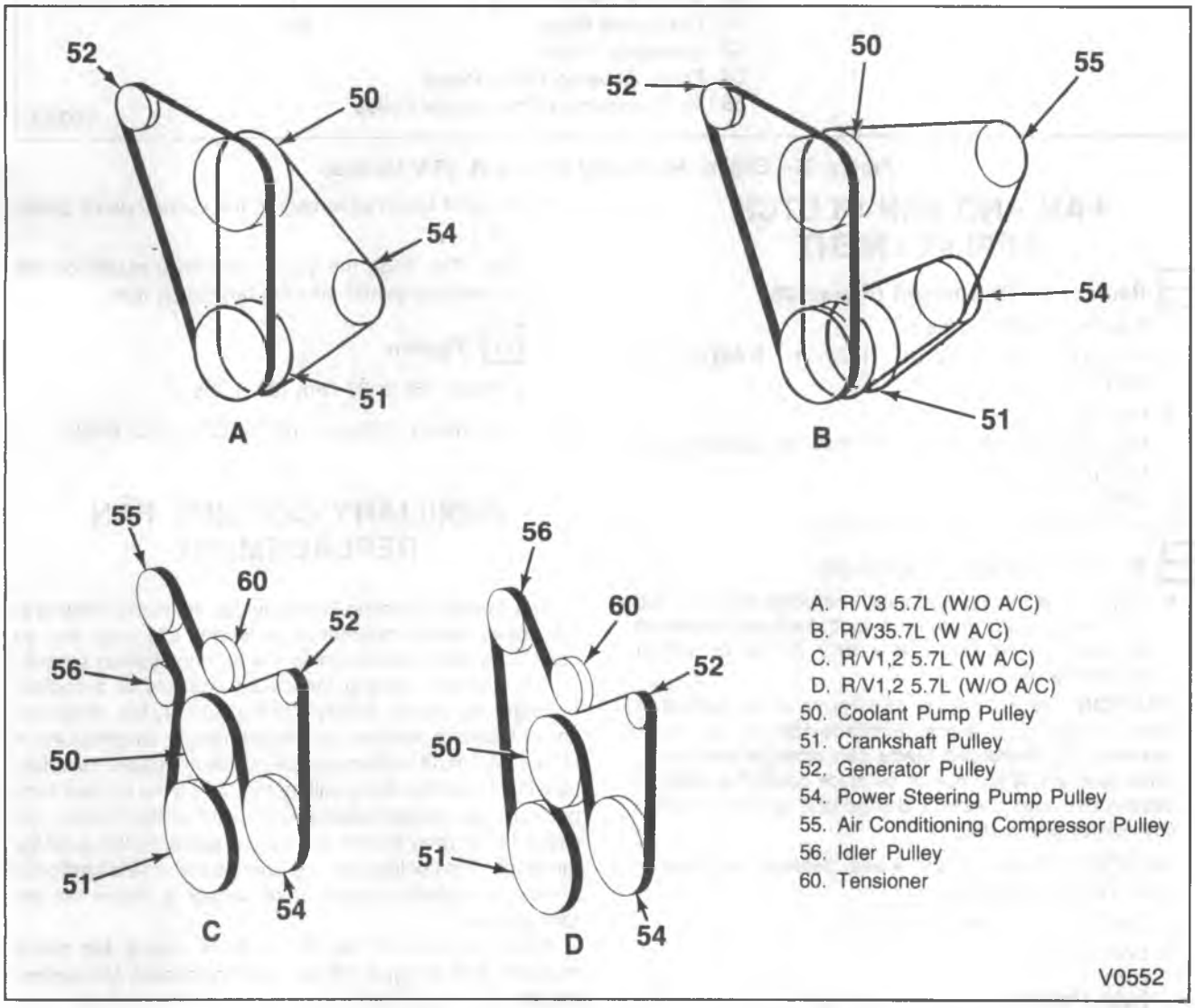

Figure 21—Engine Accessory Drive—5.7L (R/V Models)

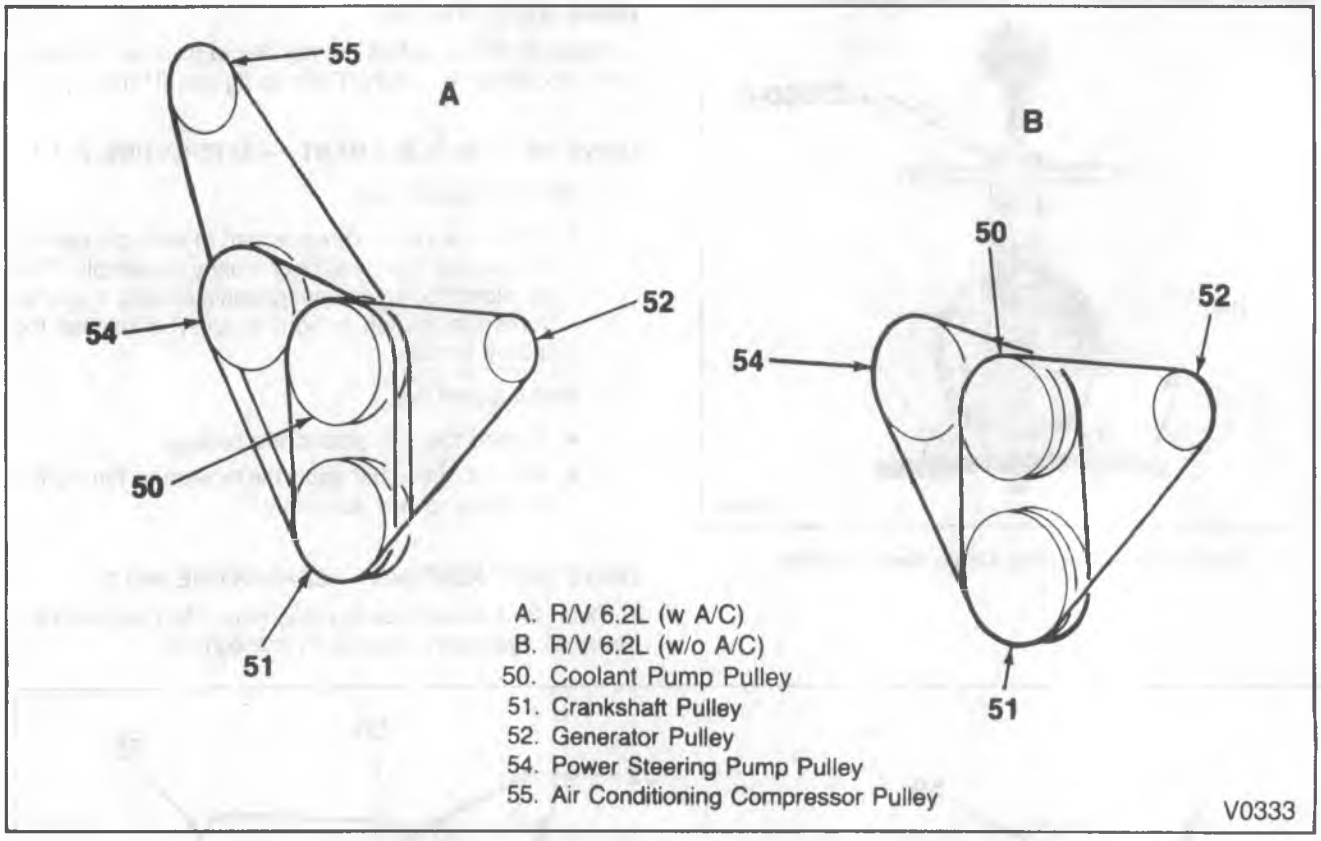

Figure 22—Engine Accessory Drive 6.2L (R/V Models)

FAN AND FAN CLUTCH REPLACEMENT

Remove or Disconnect (Figure 26)

1. Negative battery cable.
2. Radiator fan shroud. Refer to RADIATOR (SEC. 6B2).
3. Nuts (75).
4. Fan (73) and fan clutch (74) from the coolant pump pulley (70).
5. Bolts (72).
6. Fan (73) from the fan clutch (74).

Install or Connect (Figure 26)

- Inspect the mating surfaces (the coolant pump hub and the fan clutch hub) for smoothness and rework as necessary to eliminate any burrs or other imperfections.

CAUTION: Do not repair and reuse a fan with a bent or damaged blade. Replace the fan as an assembly. A damaged blade can change the balance of a fan. A fan out of balance could fly apart during use and create a dangerous condition to the owner and vehicle.

NOTICE: For steps 2 and 4 see "Notice" on page 6B1-1 of this section.

1. Fan (73) to the fan clutch (74).
2. Bolts (72).

Tighten

- Bolts (72) to 27 N•m (20 ft. lbs.).

3. Fan and clutch assembly to the coolant pump pulley (70).
4. Nuts (75). Align the yellow reference marks on the coolant pump hub and the fan clutch hub.

Tighten

- Nuts (75) to 27 N•m (20 ft. lbs.).

5. Fan shroud. Refer to RADIATOR (SEC. 6B2).

AUXILIARY COOLING FAN REPLACEMENT

The Auxiliary Cooling Fan provides additional cooling at low speed vehicle operations, extended idle, stop and go conditions, and when running the air conditioning system.

The auxiliary cooling fan circuit consists of a coolant temperature sensor, a relay and the auxiliary fan. When the coolant sensor reaches a predetermined temperature, it closes the circuit to the relay coil, which energizes the relay, passing 12 volts to the auxiliary fan. When the coolant temperature decreases below the setpoint of the sensor, the circuit to the relay opens and 12 volt power to the auxiliary fan stops. The cooling fan only operates when the ignition is on and the coolant temperature sensor is above the set temperature.

Refer to figure 27 for the auxiliary cooling fan circuit diagram, and to figure 28 for auxiliary cooling fan system diagnosis.

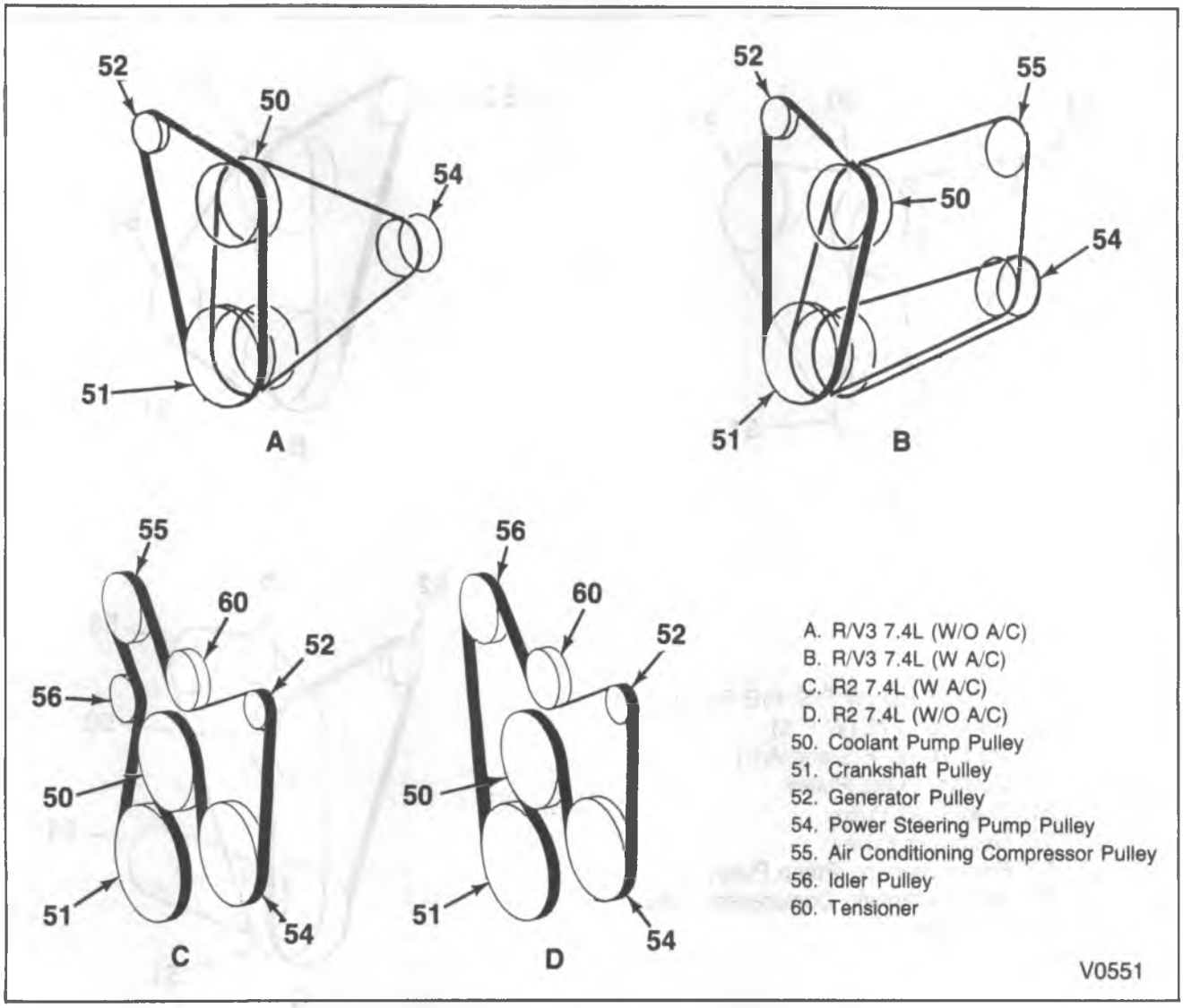

Figure 23—Engine Accessory Drive—7.4L (R2, R/V3 Models)

COOLING FAN ASSEMBLY

Remove or Disconnect (Figure 29)

1. Negative battery cable.
2. Grille assembly. Refer to SHEET METAL AND FIBERGLASS (SEC. 2B).
3. Fan harness connector (83).
4. Bolts or screws (82).
5. Fan assembly (81) from the radiator support (80).

Install or Connect (Figure 29)

1. Fan assembly (81) to the radiator support (80).

NOTICE: See "Notice" on page 6B1-1 of this section.

2. Bolts or screws (82).

Tighten

- Bolts or screws (82) to 6 N•m (53 in. lbs.).

3. Fan harness connector (83).
4. Grille assembly. Refer to SHEET METAL AND FIBERGLASS (SEC. 2B).
5. Negative battery cable.

FAN RELAY

Remove or Disconnect (Figure 29)

1. Negative battery cable.
2. Wiring harness connector.
3. Screws attaching relay (100) to dash panel.
4. Fan relay (100).

Install or Connect (Figure 29)

1. Relay (100) to dash panel.

NOTICE: See "Notice" on page 6B1-1 of this section.

2. Screws.

Tighten

- Screws to 1.5 N•m (13 in. lbs.).

3. Wiring harness connector.
4. Negative battery cable.

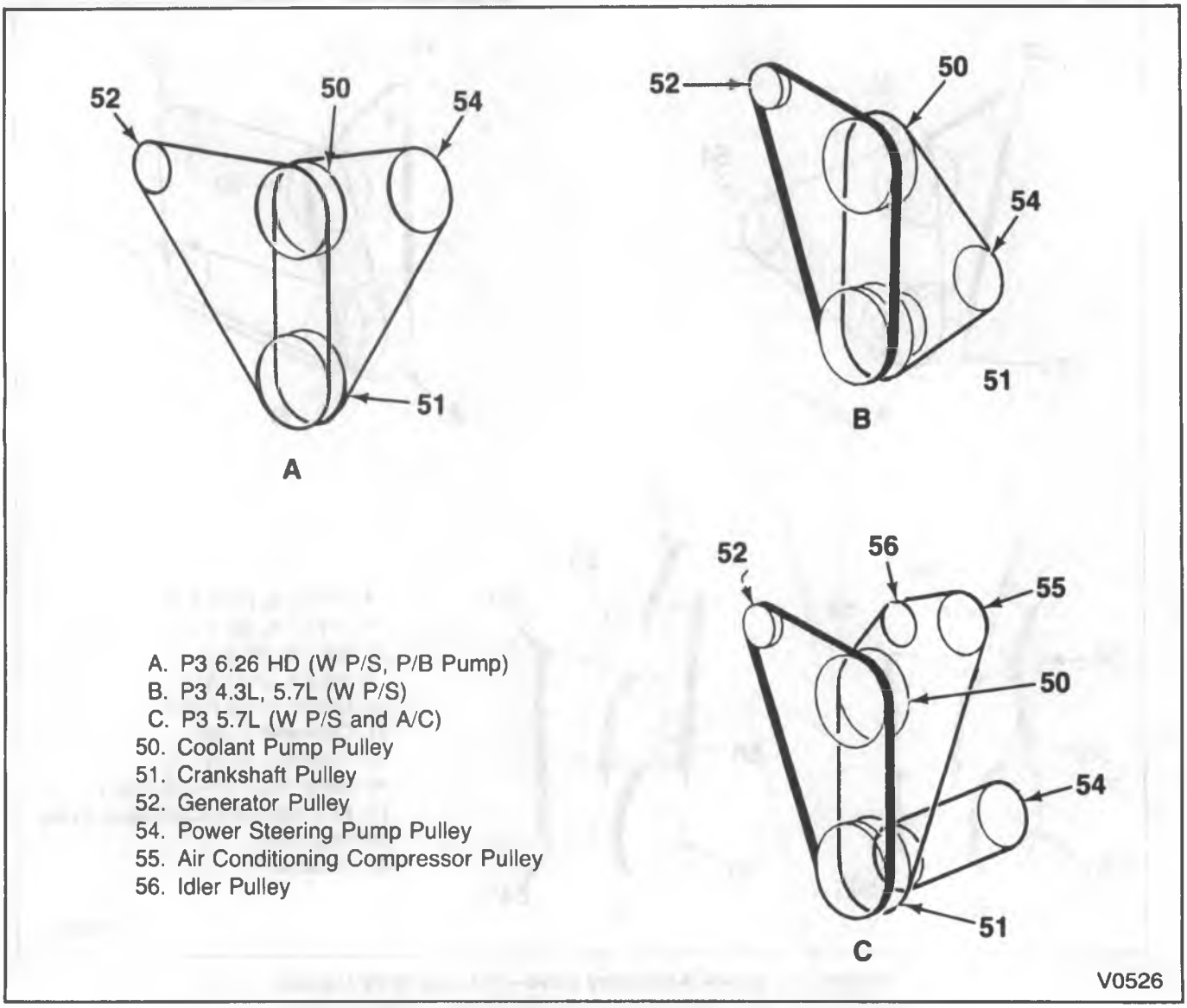

Figure 24—Engine Accessory Drive—6.2L HD, 4.3L, 5.7L (P Models)

COOLANT TEMPERATURE SENSOR

Remove or Disconnect (Figure 29)

1. Negative battery cable.
2. Wiring harness connector.
3. Coolant temperature sensor (101).

Install or Connect (Figure 29)

NOTICE: See "Notice" on page 6B1-1 of this section.

1. Coolant temperature sensor.

   Tighten

   - Coolant temperature sensor to 23 N•m (17 ft. lbs.)

2. Wiring harness connector.
3. Negative battery cable.

COOLANT PUMP REPLACEMENT

4.3L, 5.0L, 5.7L AND 7.4L ENGINES

Remove or Disconnect (Figures 30 through 32)

1. Negative battery cable.

- Coolant from the radiator.

2. Belt. Refer to "Drive Belt Replacement" in this section.
3. Nuts (75).
4. Fan (73), fan clutch (74) and the pulley (70) from the coolant pump (91).
5. Fan shroud. Refer to RADIATOR (SEC 6B2).

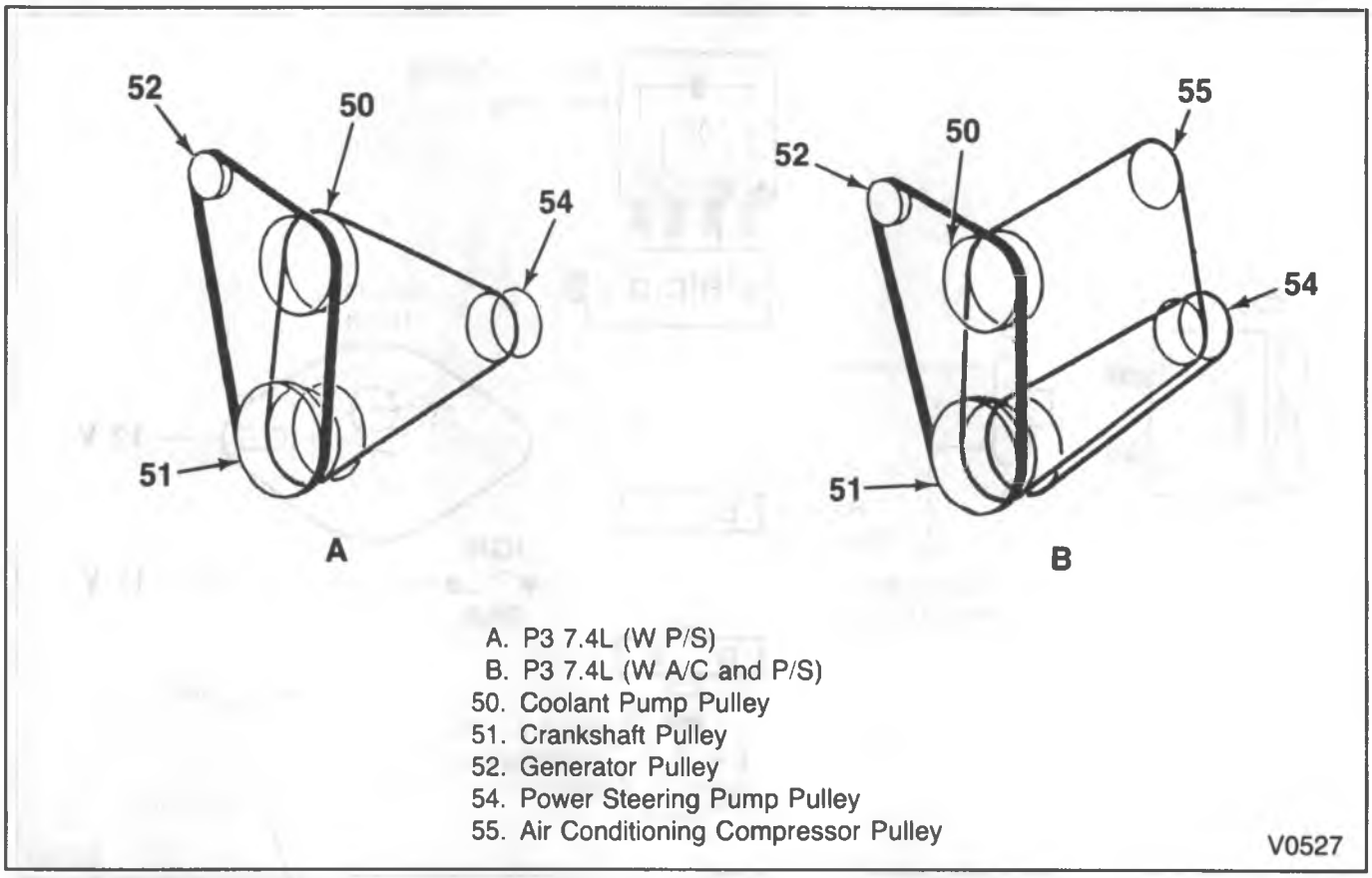

Figure 25—Engine Accessory Drive—7.4L Engine (P Models)

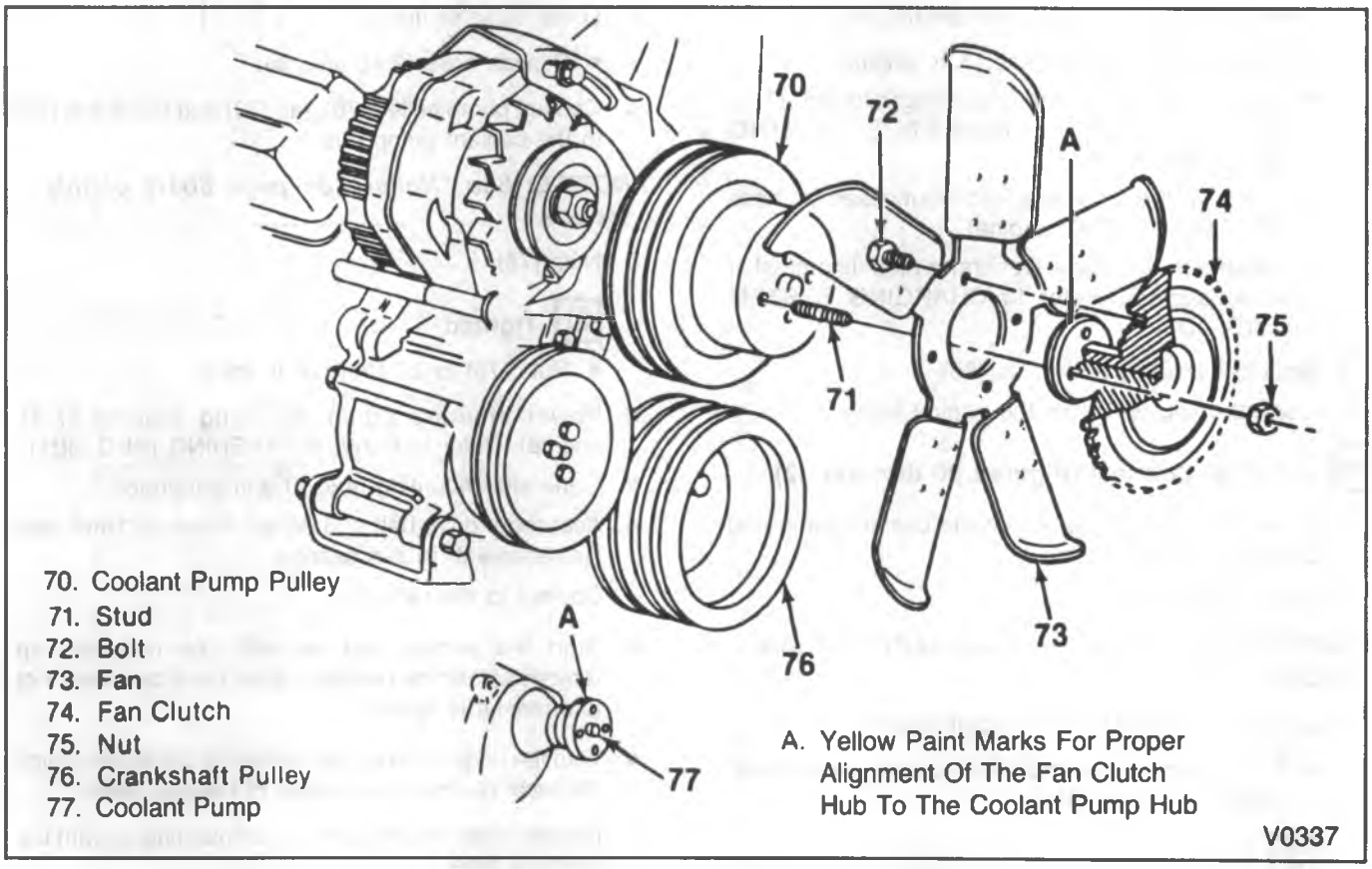

Figure 26—Fan and Fan Clutch Installation

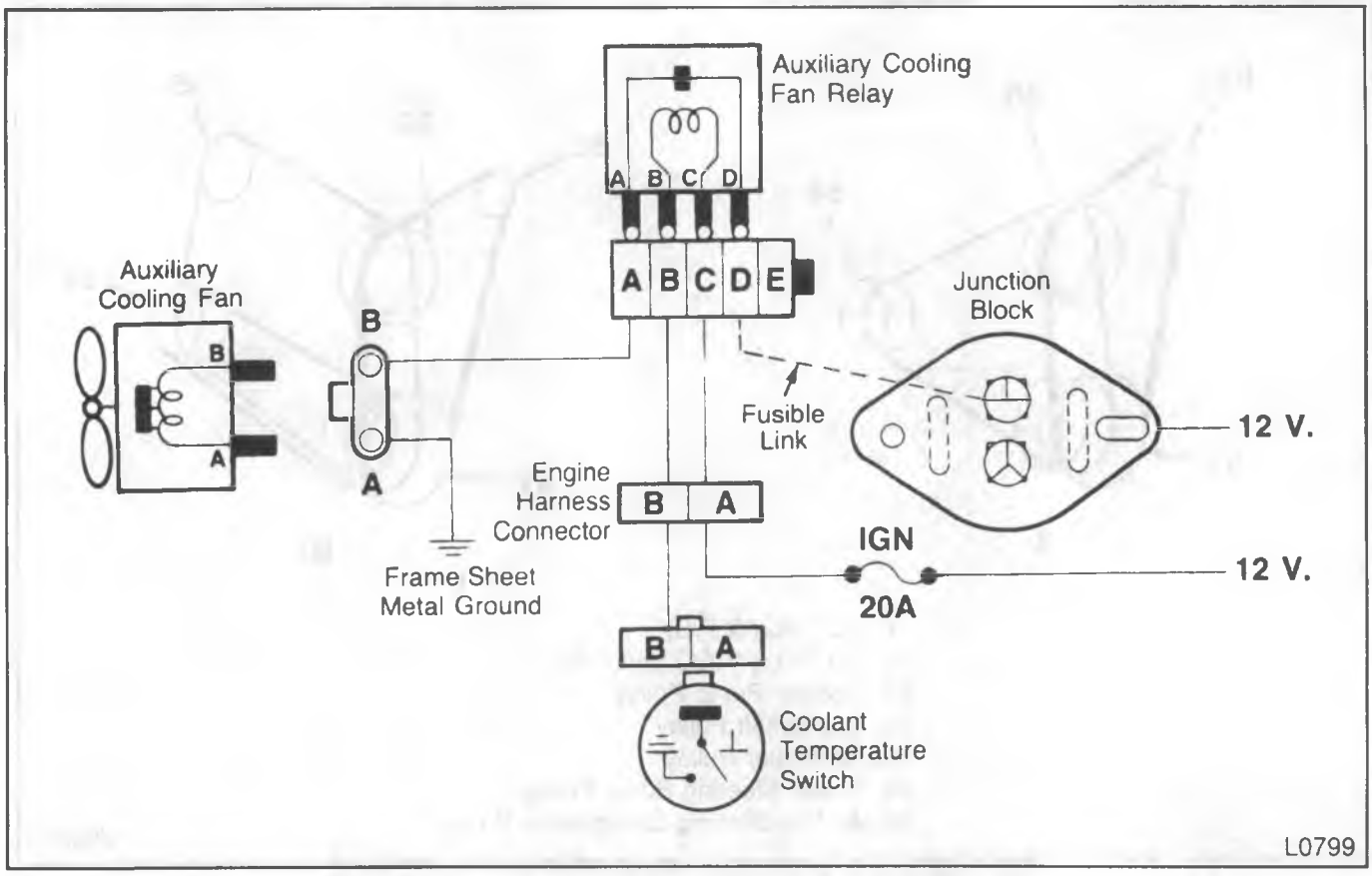

Figure 27—Auxiliary Cooling Fan Circuit Diagram

6. Lower radiator hose from the coolant pump (91).
   - Remove the bypass hose (7.4L engine).
   - Power steering pump mounting bracket (7.4L engine). Refer to POWER STEERING (SEC. 3B1).
   - Siphon power steering fluid from reservoir hose from reservoir (7.4L engine).
   - Generator, lay aside. Generator mounting bracket (7.4L engine). Refer to CHARGING SYSTEM (SEC. 6D3).
7. Bolts (92 and 93) and studs (95).
8. Coolant pump (91) from the engine block.

Install or Connect (Figures 30 through 32)

- Clean the mating surfaces on the coolant pump and the engine block.

1. New gaskets (94).

NOTICE: See "Notice" on page 6B1-1 of this section.

2. Coolant pump (91) to the engine block.
   - Place the pump against the block and retain it with bolts (92, 93 and 95).

Tighten

- Bolts (92 and 93) and studs (95) to 40 N•m (30 ft. lbs.).

3. Lower radiator hose.
   - Bypass hose (7.4L engine).
4. Coolant pump pulley (70), fan (73) and fan clutch (74) to the coolant pump hub.

NOTICE: See "Notice" on page 6B1-1 of this section.

5. Nuts (75).

Tighten

- Nuts (75) to 27 N•m (20 ft. lbs.).

6. Power steering pump mounting bracket (7.4L engine). Refer to POWER STEERING (SEC. 3B1).
7. Generator mounting bracket and generator.
8. Accessory drive belt and adjust. Refer to "Drive Belt Replacement" in this section.
9. Coolant to the radiator.

- Start the engine and run with the radiator cap removed until the radiator upper hose becomes hot (thermostat is open).
- With the engine idling, add coolant to the radiator until the level reaches the bottom of the filler neck.

10. Radiator cap, making sure the arrows line up with the overflow tube.

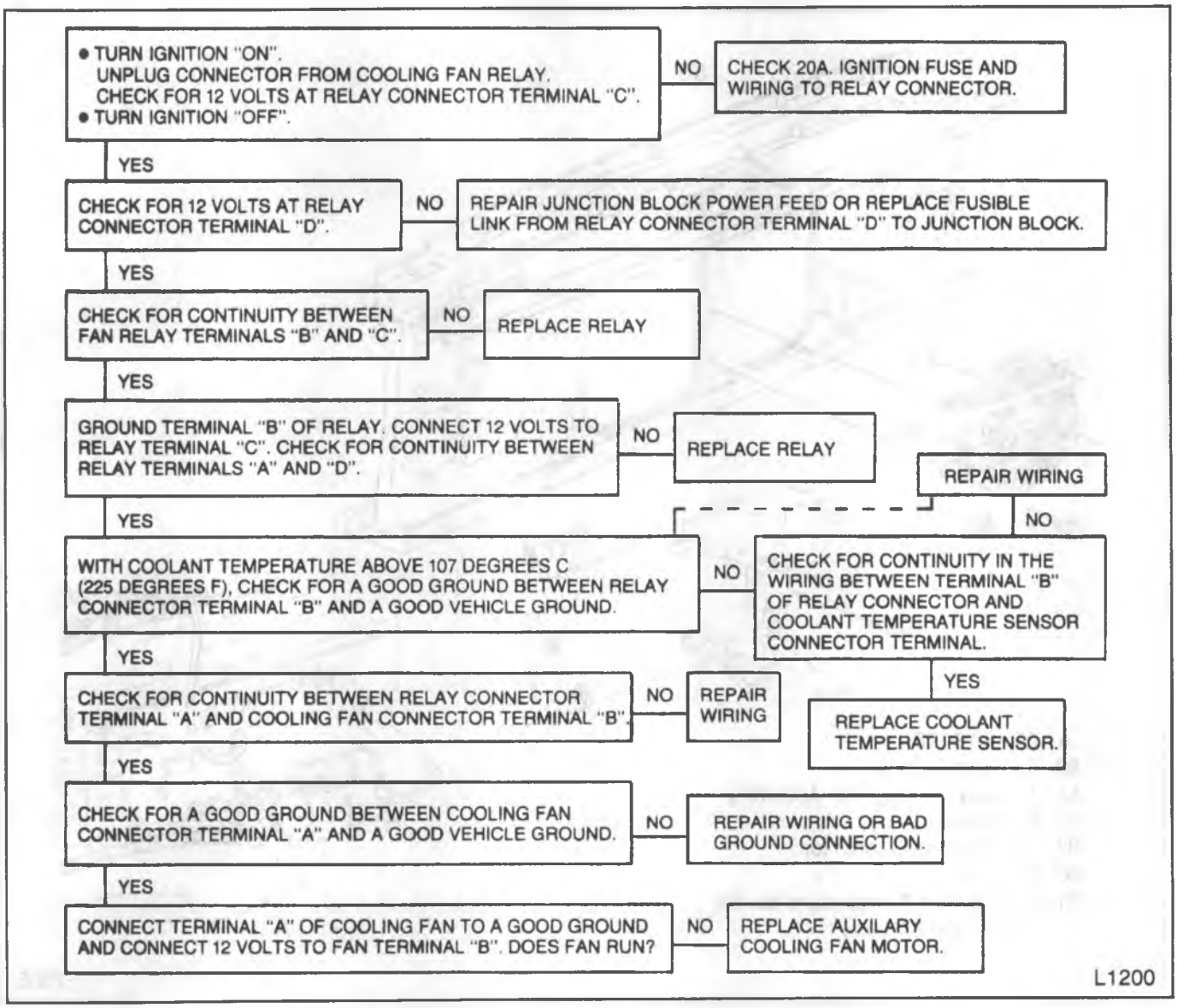

Figure 28—Auxiliary Cooling Fan System Diagnosis

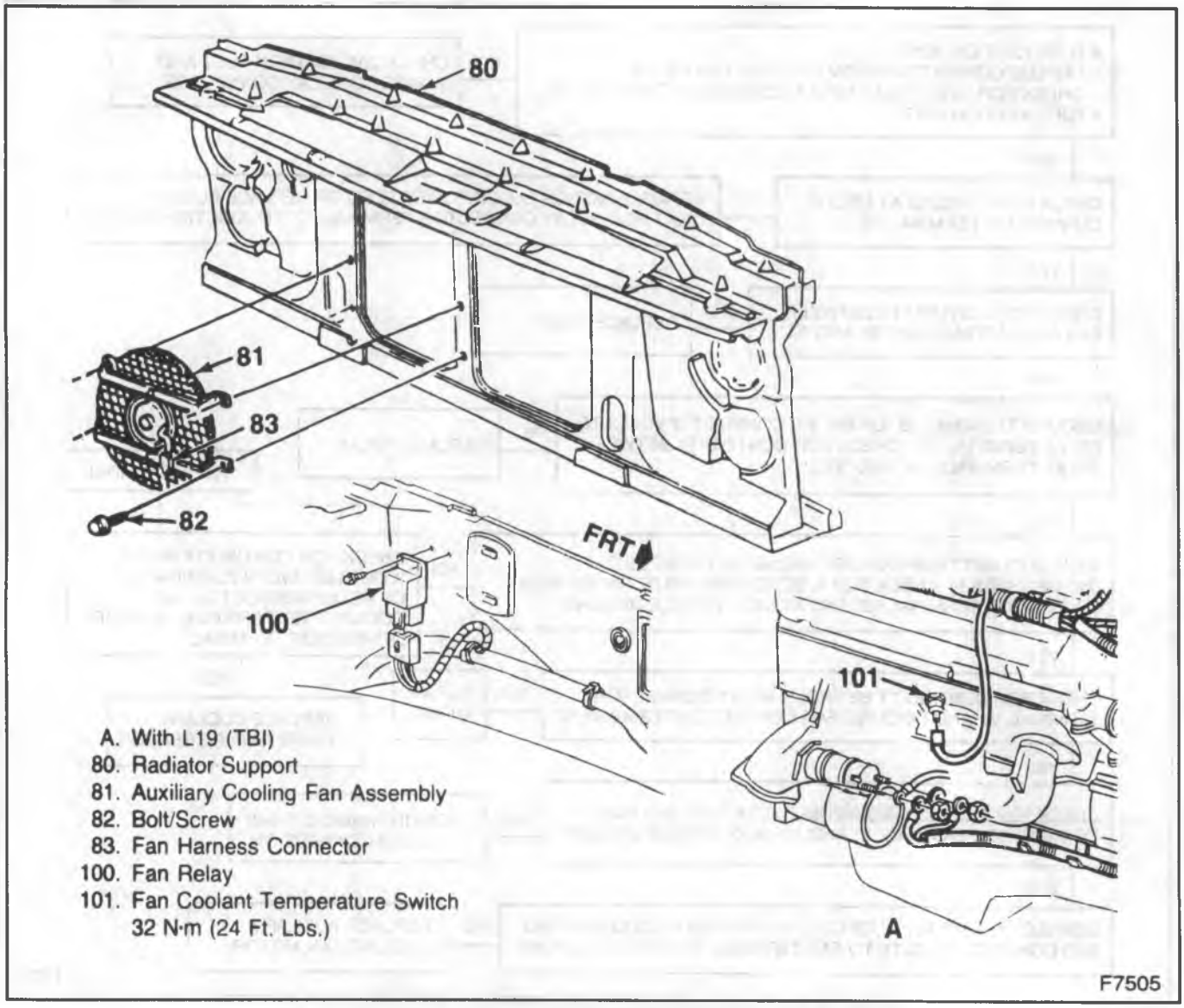

Figure 29—Auxiliary Cooling Fan Installation (R/V Models)

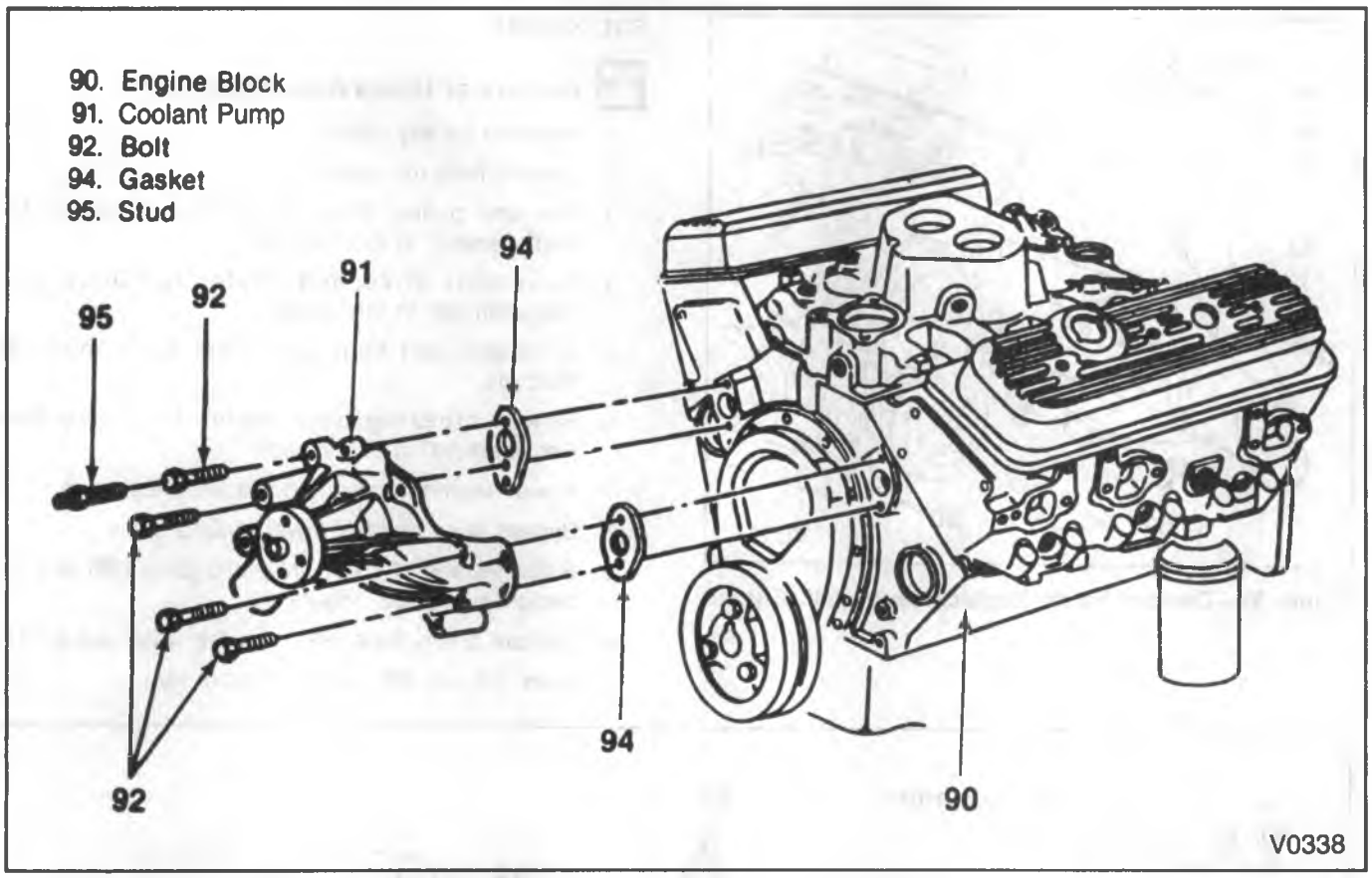

Figure 30—Coolant Pump Replacement—4.3L Engine

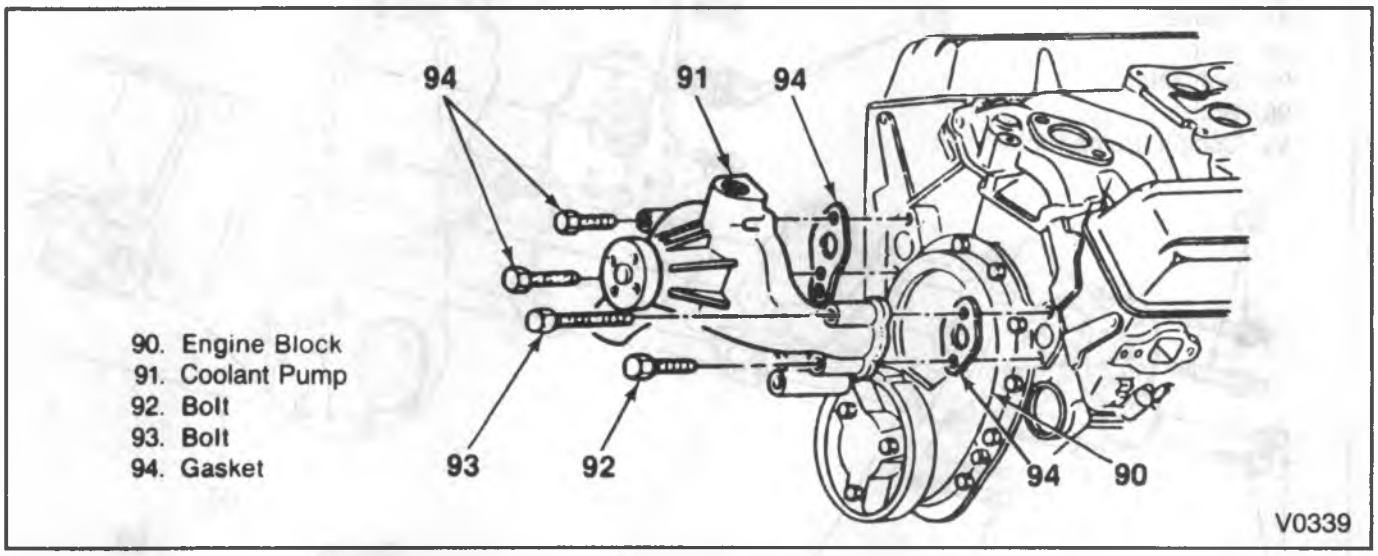

Figure 31—Coolant Pump Replacement—5.0L/5.7L Engines

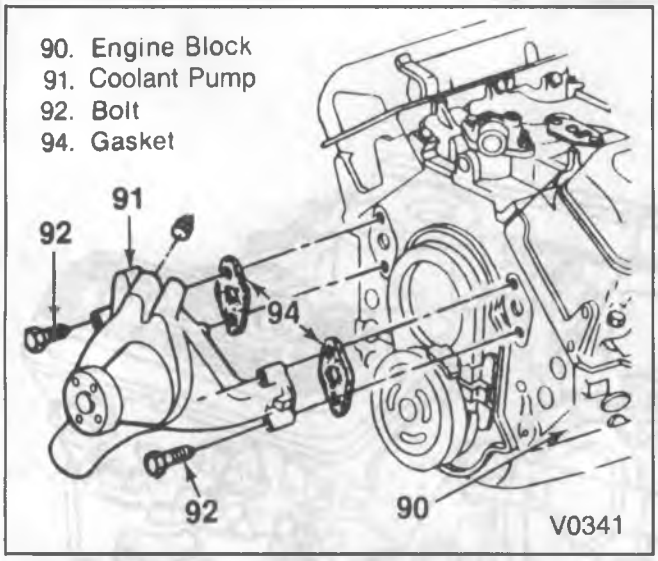

Figure 32—Coolant Pump Replacement—7.4L Engine

6.2L ENGINE

Remove or Disconnect (Figure 33)

1. Negative battery cable.
2. Coolant from the radiator.
3. Fan and pulley. Refer to "Fan and Fan Clutch Replacement" in this section.
4. Generator drive belt. Refer to "Drive Belt Replacement" in this section.
5. Generator and both upper and lower mounting brackets.
6. Power steering belt. Refer to "Drive Belt Replacement" in this section.
7. Power steering pump and brackets, lay aside.
8. Bypass hose and the lower radiator hose.
9. Bolts (96 and 97), coolant pump plate (99) and the coolant pump (92) (figure 40).
10. Coolant pump plate (99) from the water pump (91).
11. Bolts (92 and 93) and the gasket (94).

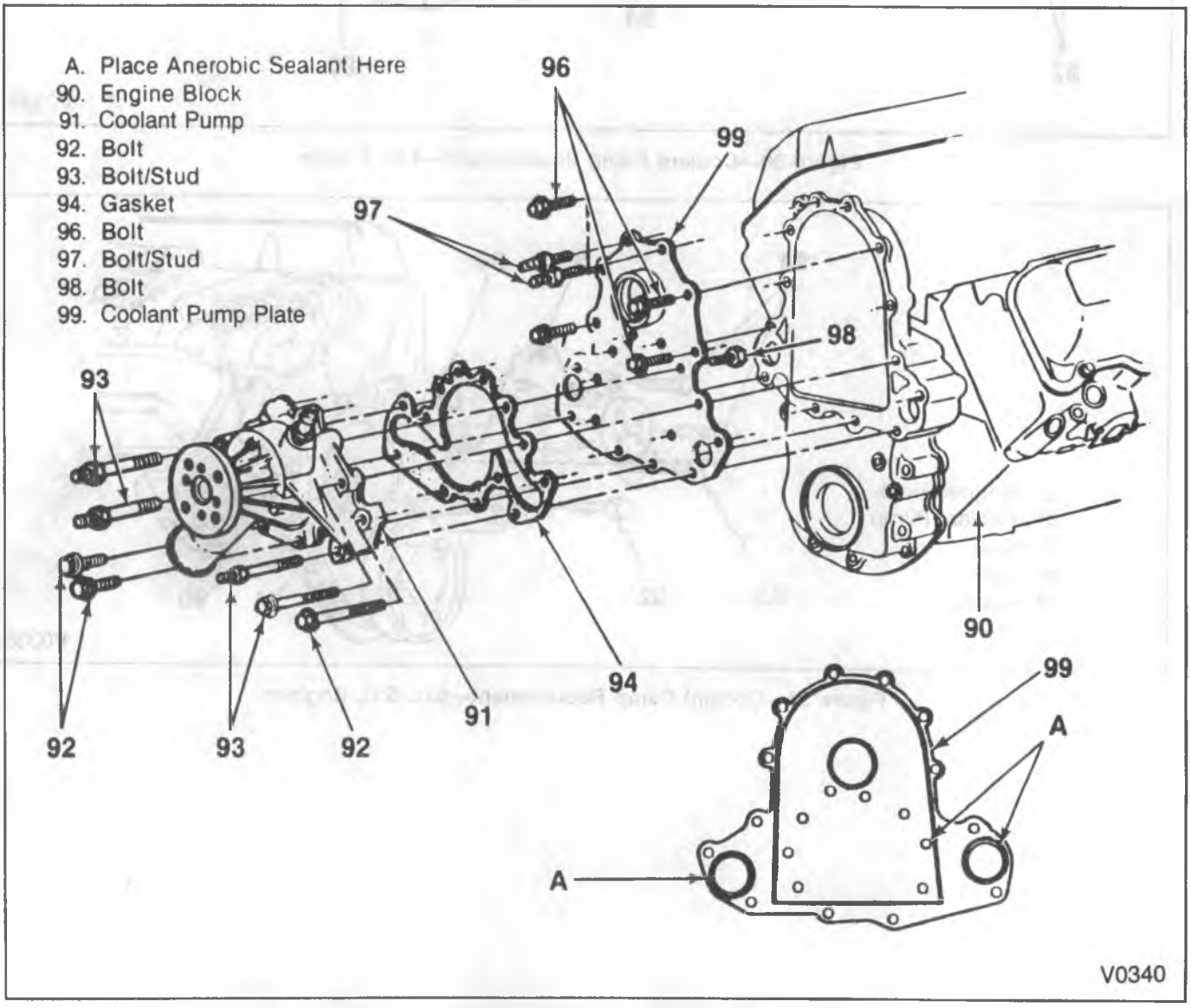

Figure 33—Coolant Pump Installation—6.2L Diesel

Install or Connect (Figure 33)

NOTICE: For steps 3 and 5 see "Notice" on page 6B1-1 of this section.

Important

- Flanges must be free of oil. Clean the mating surfaces on the coolant pump, both sides of the water pump plate and the engine block.

1. Gasket (94).
2. Coolant pump (91) to the coolant pump plate (99).
3. Bolts (92 and 93).

   Tighten

   - Bolts (92 and 93) to 40 N•m (30 ft. lbs.).
4. Coolant pump (91) to the engine block.
   - Apply anaerobic sealer #1052357 or equivalent.
   - The sealer must be wet to the touch when the bolts are tightened.
5. Bolts (96 and 97).

   Tighten

   - Bolts (96 and 97) to 40 N•m (30 ft. lbs.).
6. Bypass hose and lower radiator hose.
7. Power steering pump and brackets. Refer to POWER STEERING (SEC. 3B1).
8. Generator and brackets. Refer to CHARGING SYSTEM (SEC. 6D3).
9. Drive belts and adjust. Refer to "Drive Belt Replacement" in this section.
10. Fan (and pulley) (73) assembly. Refer to "Fan and Fan Clutch Replacement" in this section.
11. Coolant in the radiator.
12. Negative battery cable.

- Start the engine and operate with the radiator cap removed until the radiator upper hose becomes hot (thermostat is open).
- With the engine idling, add coolant to the radiator until the level reaches the bottom of the filler neck.

13. Radiator cap, making sure the arrows line up with the overflow tube.

ENGINE OIL COOLER, LINES AND HOSES

5.7L AND 7.4L ENGINES

ENGINE OIL COOLER

Remove or Disconnect (Figures 34 and 35)

1. Negative battery cable.
2. Grill. Refer to SHEET METAL AND FIBERGLASS (SEC. 2B).
3. Cooler hoses (126) from cooler (121) (catch oil in pan).
4. Oil cooler (121) from mounting support.

Install or Connect (Figures 34 and 35)

1. Oil cooler (121) to mounting support (figure 41).
2. Cooler hoses (126) to cooler (121).
3. Grill. Refer to SHEET METAL AND FIBERGLASS (SEC. 2B).
4. Negative battery cable.

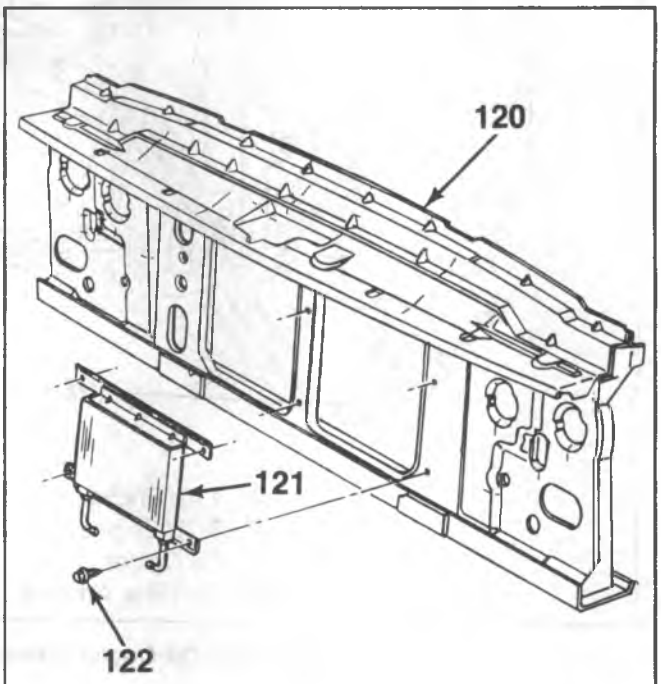

120. Radiator Support
121. Engine Oil Cooler
122. Screw

V0271

Figure 34—Oil Cooler Mounting—5.7L and 7.4L Engines

ENGINE OIL COOLER HOSES

Remove or Disconnect (Figure 35)

1. Negative battery cable.
2. Raise the vehicle. Support with suitable safety stands.
3. Hose (126) from line connection.
4. Hose from cooler connection.
5. Hose from support clamps.
6. Hose from vehicle.

Install or Connect

1. Hose (126) to vehicle.
2. Hose to line connection.
3. Hose to cooler connection.
4. Hose to support clamps.
5. Lower vehicle.
6. Negative battery cable.

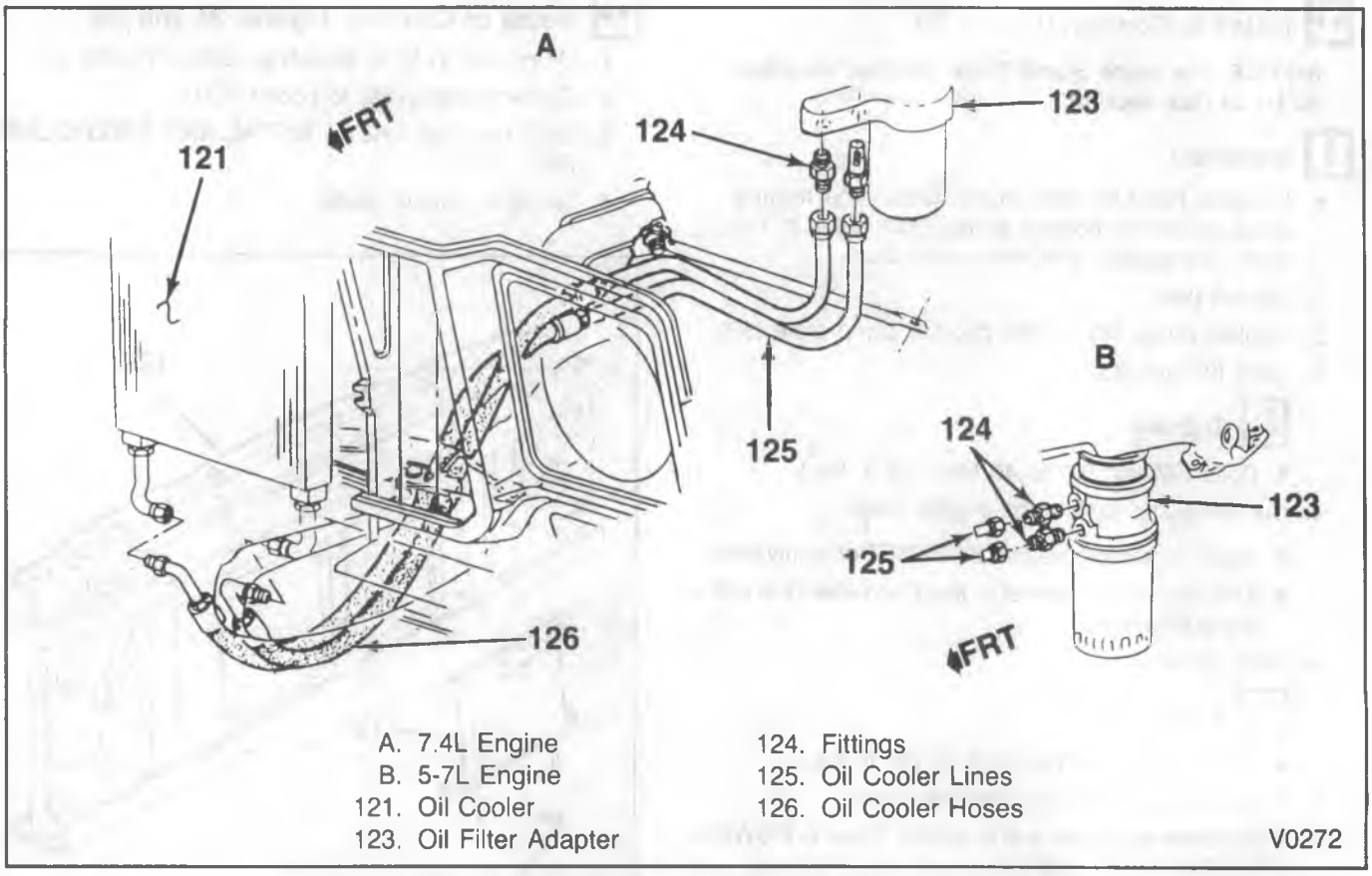

Figure 35—Oil Cooler Lines and Hoses—5.7L and 7.4L Engines

ENGINE OIL COOLER LINES

Remove or Disconnect (Figure 35)

1. Negative battery cable.
2. Raise the vehicle. Support with suitable safety stands.
3. Lines (125) from hose connections.
4. Lines from oil filter adapter housing (123).
5. Lines from support clamp (if applicable).
6. Lines from vehicle.

Install or Connect

1. Lines to vehicle.
2. Lines to hose connections.
3. Lines to filter housing (123).
4. Lines to clamp (if applicable).
5. Lower vehicle.
6. Negative battery cable.

OIL COOLER LINE(S) (6.2L ENGINE)

Remove or Disconnect (Figures 36 and 37)

1. Negative battery cable.
2. Oil cooler line support clamp at fan shroud opening.
3. Fan shroud. Refer to RADIATOR (SEC. 6B2).
4. Connections line and hose at shroud clamp.
5. Oil cooler line(s) from radiator connection.
6. Oil cooler line(s).

Install or Connect

1. Oil cooler line(s).

NOTICE: See "Notice" on page 6B1-1 of this section.

2. Oil cooler line(s) to radiator connection(s).

   Tighten

   - Oil cooler line(s) connections (all) to 24 N•m (18 ft. lbs.).

3. Oil cooler line(s) to hose connection(s).
4. Oil cooler line(s) clamp.
5. Shroud. Refer to RADIATOR (SEC. 6B2).
6. Negative battery cable.

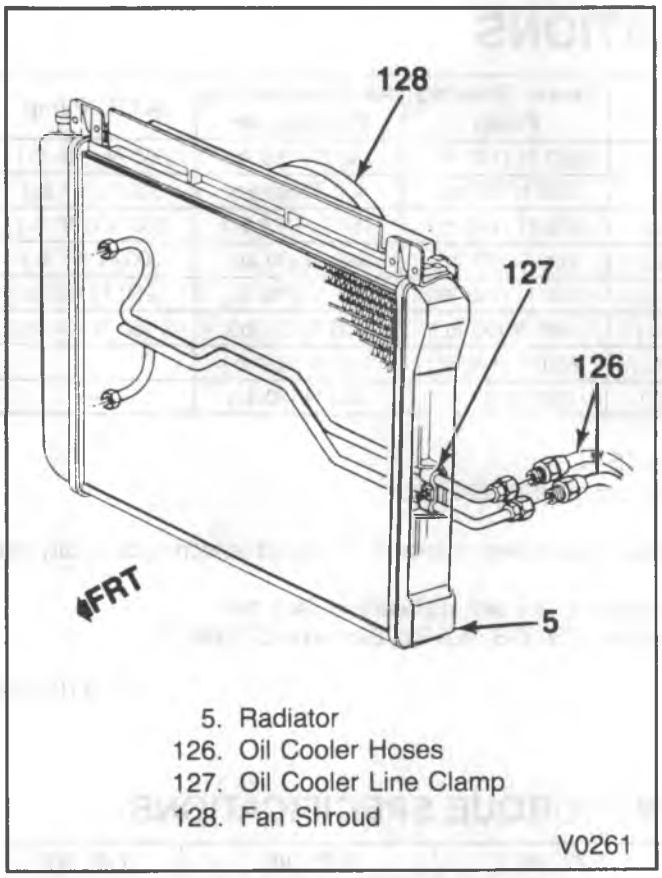

Figure 36—Oil Cooler Lines (6.2L Engine)

OIL COOLER HOSE(S) (6.2L ENGINE)

Remove or Disconnect (Figures 36 and 37)

1. Negative battery cable.
2. Oil cooler hose(s) at exhaust manifold bracket clamp.
3. Oil cooler hose(s) at radiator shroud clamp.
4. Oil cooler hose(s) clamp from inner fender panel.
5. Hose(s).

Install or Connect

1. Oil cooler hose(s).
2. Oil cooler hose(s) to connection(s) at exhaust manifold bracket clamp.

NOTICE: See "Notice" on page 6B1-1 of this section.

3. Oil cooler hose(s) to connection(s) at radiator shroud clamp.

Tighten

- Oil cooler hose(s) connections (all) to 24 N•m (18 ft. lbs.).

4. Inner fender panel clamp.
5. Negative battery cable.

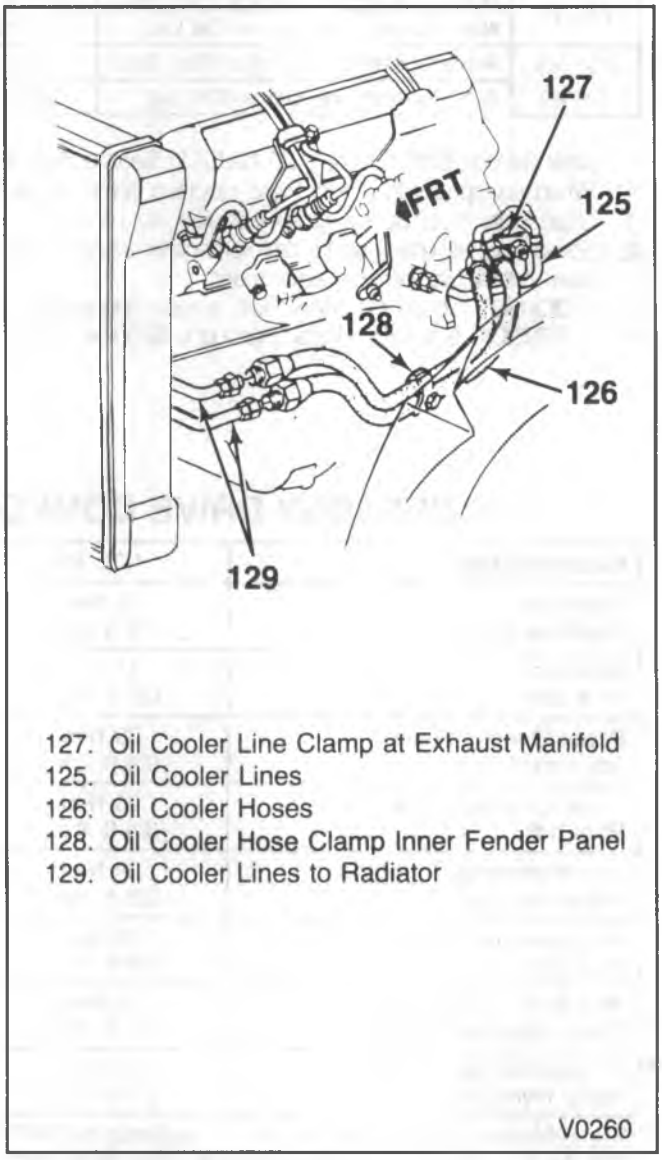

Figure 37—Oil Cooler Lines (6.2L Engine)

SPECIFICATIONS

Engine	Tension Requirement[1,2]	Generator	Power Steering Pump	Air Conditioning Compressor	A.I.R. Pump **
4.3L V6	Before Operating The Engine (New Belt)	600 N (135 lb.)	650 N (146 lb.)	750 N (169 lb.)	650 N (146 lb.)
	After Operating The Engine (Old Belt)	400 N (90 lb.)	300 N (67 lb.)	400 N (90 lb.)	300 N (67 lb.)
5.7L V8	Before Operating The Engine (New Belt)	600 N (135 lb.)	650 N (146 lb.)	750 N (169 lb.)	650 N (146 lb.)
	After Operating The Engine (Old Belt)	400 N (90 lb.)	300 N (67 lb.)	400 N (90 lb.)	300 N (67 lb.)
7.4L V8	Before Operating The Engine (New Belt)	*600 N (135 lb.)	650 N (146 lb.)	650 N (146 lb.)	250 N (56 lb.)
	After Operating The Engine (Old Belt)	*400 N (90 lb.)	400 N (90 lb.)	400 N (90 lb.)	150 N (34 lb.)
6.2L V8 (Diesel)	Before Operating The Engine (New Belt)	650 N (146 lb.)	650 N (146 lb.)	750 N (169 lb.)	—
	After Operating The Engine (Old Belt)	300 N (67 lb.)	300 N (67 lb.)	400 N (90 lb.)	—

* New Service Belt: 500 N ± 25 N/USED Service Belt: 400 N ± 25 N.
** When equipped with a right hand mounted pump and/or Federal Emissions (NA5) ONLY.
1: Used belts must be set at specification -0, +50 N.
2: Some engines use a single belt serpentine accessory drive system. This system maintains the correct tension automatically and does not require periodic adjustment.
DO NOT exceed the "New Belt" tension specification when tensioning any belt, especially a used belt.
TENSION GAUGE: V-Belts; Burroughs BT-33-96 ACBN; Kent-Moore J23600-B Multi-Rib; Burroughs BT-33-97 M

TB-3104-2A

ACCESSORY DRIVE COMPONENT TORQUE SPECIFICATIONS

Fastener Name	4.3L V6	5.7L V8	6.2L V8	7.4L V8
Generator Adjustment Bolt	25 N•m (18 ft. lbs.)	25 N•m (18 ft. lbs.)	27 N•m (20 ft. lbs.)	*25 N•m (18 ft. lbs.)
Generator Pivot Bolt	47 N•m (35 ft. lbs.)	47 N•m (35 ft. lbs.)	43 N•m (32 ft. lbs.)	50 N•m (37 ft. lbs.)
Power Steering Pump Adjustment Bolt	33 N•m (24 ft. lbs.)	33 N•m (24 ft. lbs.)	43 N•m (32 ft. lbs.)	88 N•m (65 ft. lbs.)
Power Steering Pump Pivot Bolt	33 N•m (24 ft. lbs.)	33 N•m (24 ft. lbs.)	43 N•m (32 ft. lbs.)	50 N•m (37 ft. lbs.)
Air Conditioning Condenser Adjustment Bolt	34 N•m (25 ft. lbs.)	34 N•m (25 ft. lbs.)	34 N•m (25 ft. lbs.)	34 N•m (25 ft. lbs.)
Air Conditioning Condenser Pivot Bolt	34 N•m (25 ft. lbs.)	34 N•m (25 ft. lbs.)	34 N•m (25 ft. lbs.)	34 N•m (25 ft. lbs.)
Air Injection Reactor (A.I.R.) Pump Adjustment Bolt	25 N•m (18 ft. lbs.)	**25 N•m (18 ft. lbs.)	—	33 N•m (24 ft. lbs.)
Air Injection Reactor (A.I.R.) Pump Pivot Bolt	24 N•m (17 ft. lbs.)	**24 N•m (17 ft. lbs.)	—	33 N•m (24 ft. lbs.)

*For P-Models, torque is 64 N•m (47 ft. lbs.) with the K97 Generator.
**For the 5.7L V8 with Federal Emissions (RPO NA5), torque is 50 N•m (37 ft. lbs.)

GMTB-3105-2A

SPECIFICATIONS (CONT.)

THERMOSTAT AND RESERVOIR RELATED TORQUE SPECIFICATIONS

Fastener Name	R/V1	R/V2	R/V3	P300
Coolant Recovery Tank Bolt/Screw	2 N•m (18 in. lbs.)	2 N•m (18 in. lbs.)	2 N•m (18 in. lbs.)	— —
Deaeration Tank Bolts/Screws and Nuts	5 N•m (44 in. lbs.)	5 N•m (44 in. lbs.)	5 N•m (44 in. lbs.)	17 N•m (12 ft. lbs.)
Coolant Outlet To The Thermostat Housing Bolts	*•27 N•m (20 ft. lbs.)	*•27 N•m (20 ft. lbs.)	*•27 N•m (20 ft. lbs.)	*•27 N•m (20 ft. lbs.)
Thermostat Crossover To The Engine Bolts (6.2L Diesel ONLY)	47 N•m (35 ft. lbs.)	47 N•m (35 ft. lbs.)	47 N•m (35 ft. lbs.)	47 N•m (35 ft. lbs.)
Coolant Outlet To The Thermostat Housing Bolts (6.2L Diesel ONLY)	47 N•m (35 ft. lbs.)	47 N•m (35 ft. lbs.)	47 N•m (35 ft. lbs.)	47 N•m (35 ft. lbs.)

*On vehicles with a 6.2L Diesel, torque to 47 N•m (35 ft. lbs.)
•On Vehicles with a 7.4L V8, torque to 41 N•m (30 ft. lbs.)

GMTB-3106-2A

SPECIAL TOOLS

1. J 23600-B

1. Universal V-Belt Tension Gage

V0342

SECTION 6B2

RADIATOR

NOTICE: When fasteners are removed, always reinstall them at the same location from which they were removed. If a fastener needs to be replaced, use the correct part number fastener for that application. If the correct part number fastener is not available, a fastener of equal size and strength (or stronger) may be used. Fasteners that are not reused, and those requiring thread locking compound will be called out. The correct torque value must be used when installing fasteners that require it. If the above conditions are not followed, parts or system damage could result.

CONTENTS

SUBJECT	PAGE
Description	6B2- 1
Diagnosis	6B2- 5
Maintenance	6B2- 5
On-Vehicle Service	6B2- 6
Fan Shroud Replacement	6B2- 6
Radiator Replacement	6B2- 9
Pressure Cap	6B2-13
Coolant Recovery System	6B2-14
Surge Tank	6B2-14
Aluminum Radiator Repair	6B2-15
Description	6B2-15
Aluminum Radiator Service	6B2-16
Radiator Core	6B2-18
Tanks and Gaskets	6B2-19
Oil Cooler and Gaskets	6B2-20
Drain Cock	6B2-21
Specifications	6B2-22
Special Tools	6B2-23

DESCRIPTION

The radiator in the R/V and P-Models is a crossflow tube-and-center type. Refer to figures 1 through 3 for views of typical installations.

All radiators are fitted with a shroud designed to assist the fan in directing air flow through the radiator core and to also serve as a fan guard. Provision for coolant expansion is achieved with a coolant recovery tank. This retards coolant overflow and reduces frequent refills.

Pressure is maintained in the radiator and system by a pressure cap. The pressure cap has two valves; one relieves excessive pressure and the other compensates for coolant contraction when the engine is stopped. Radiator caps with a 105 kPa (15 psi) pressure rating are used on all models.

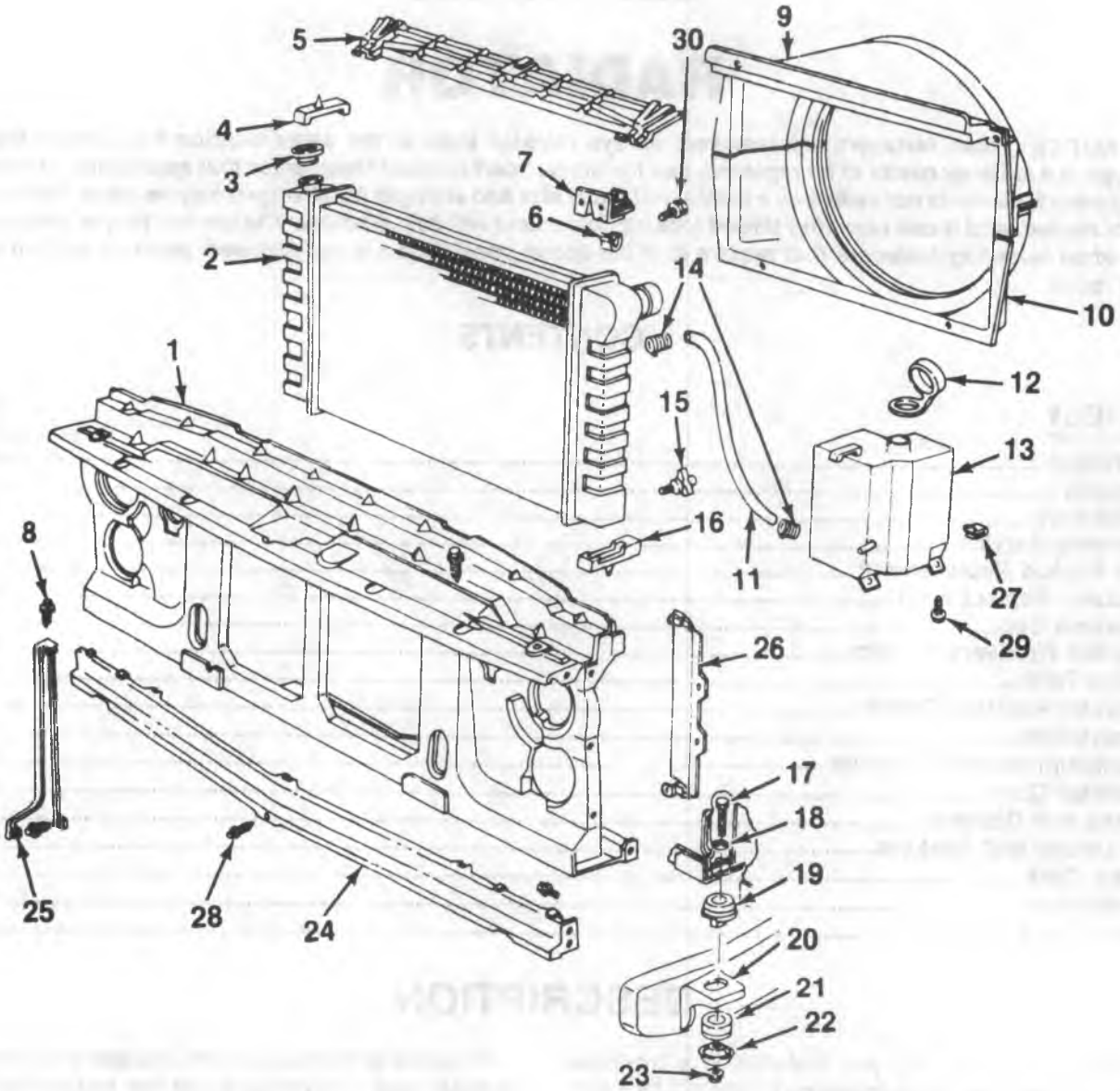

1. Support
2. Radiator
3. Filler Cap
4. Upper Insulator
5. Upper Panel
6. U-Shaped Nut
7. Shroud Bracket
8. Screw
9. Upper Shroud
10. Lower Shroud
11. Hose
12. Reservoir Cap
13. Reservoir
14. Worm Clamp
15. Drain Cock
16. Lower Insulator
17. Bolt
18. Washer
19. Upper Cushion
20. Support Bracket
21. Lower Cushion
22. Cushion Retainer
23. Nut
24. End Panel
25. Support
26. Left Baffle
27. Nut
28. Screw
29. Screw
30. Screw

L0785

Figure 1—Radiator Mounting and Related Parts (R/V Models)

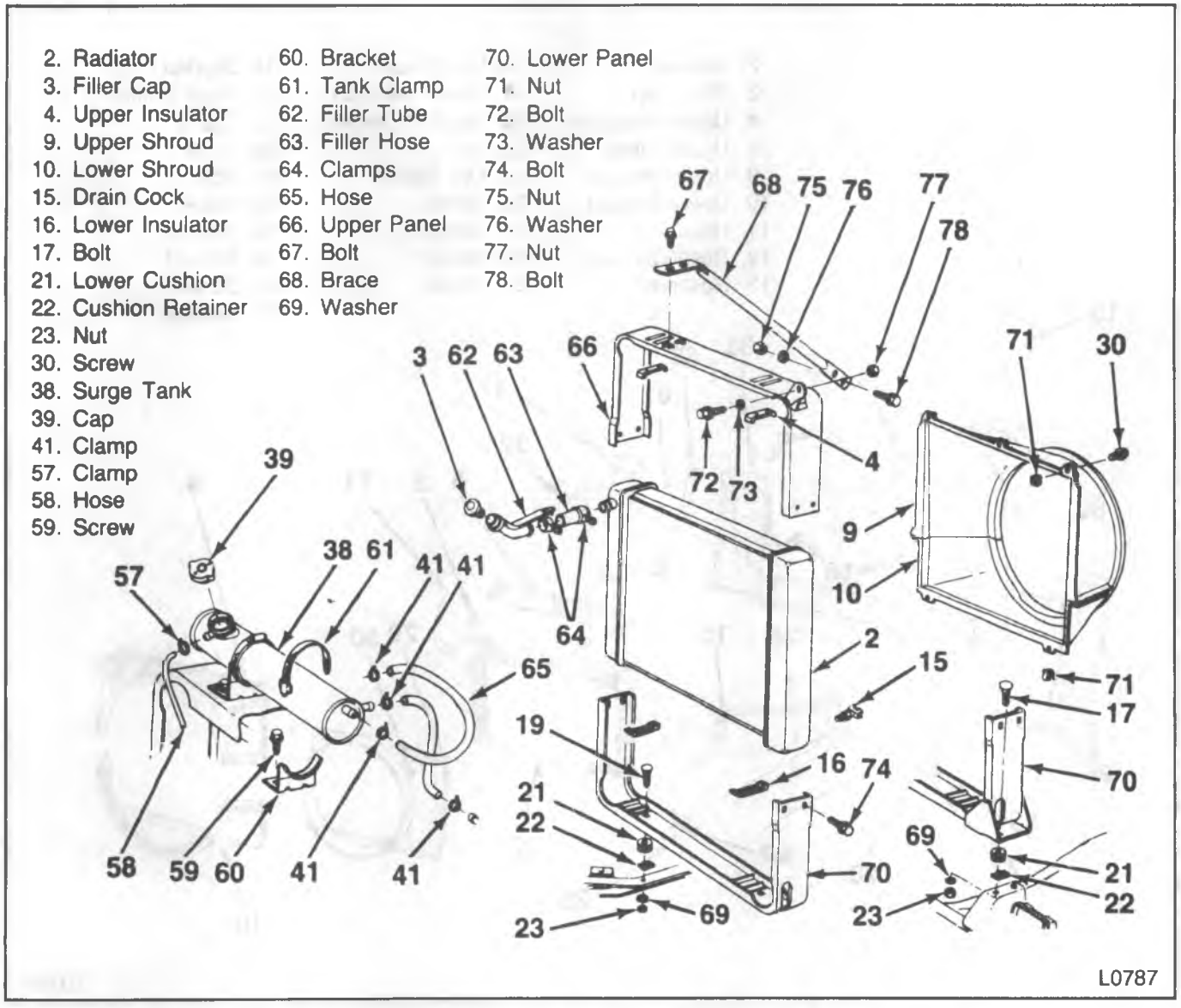

Figure 2—Radiator Mounting and Related Parts (P Motorhome Models)

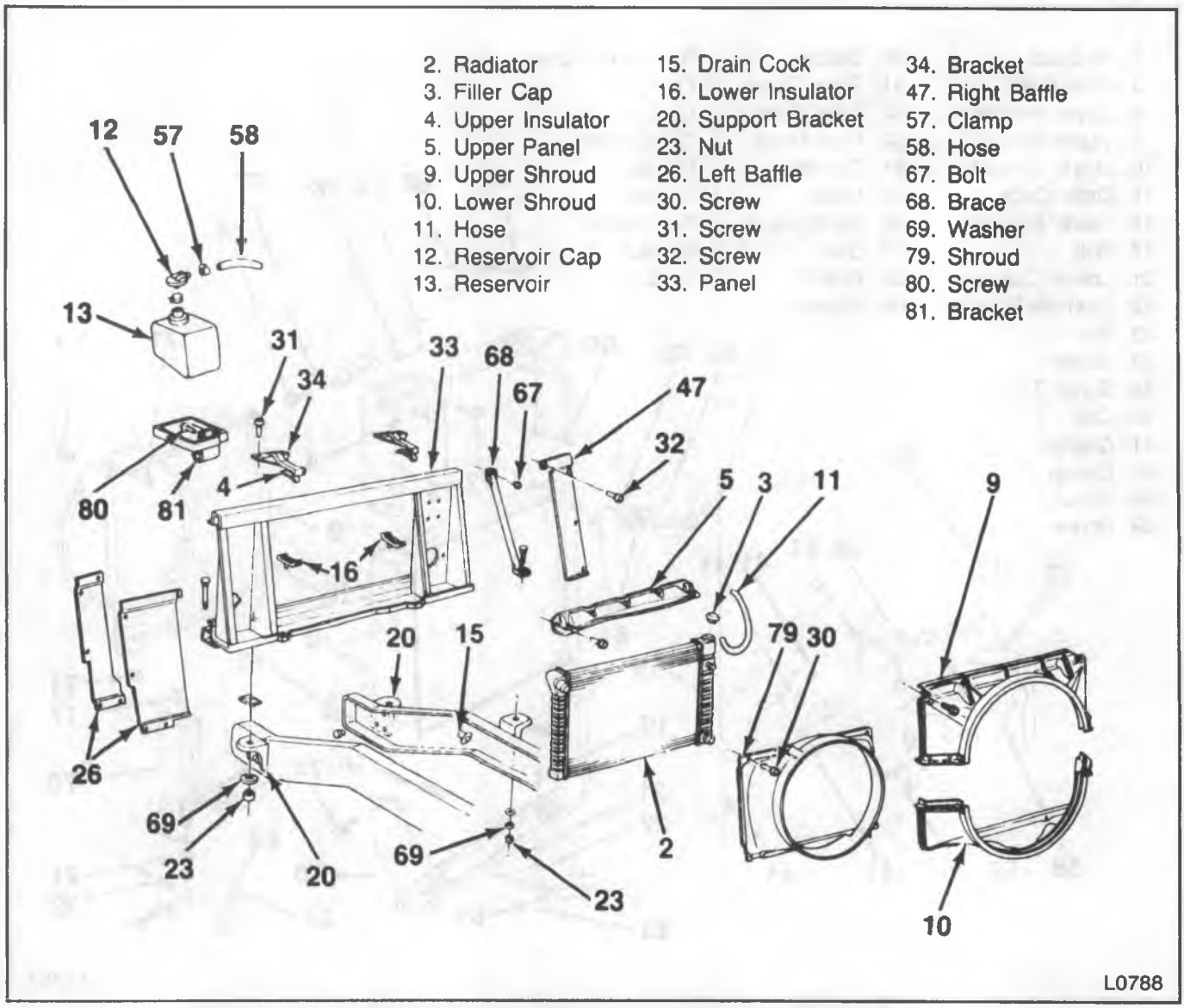

Figure 3—Radiator Mounting and Related Parts (P-Models; Except Motorhome)

DIAGNOSIS

LEAK TESTING

Some core leaks can be detected by adding water to the radiator. Clean the core so that the damaged area can be found.

1. Remove dirt and insects from the fins with a common water hose without a nozzle. Excessive water pressure could damage the fins.
2. Scrub the core with a soft-bristle brush using clean, hot water or hot water with a mild detergent solution.

On-Vehicle Pressure Testing (Figure 4)

The radiator may be pressure-tested with J 24460-01 with J 23699 (figure 4). With the system at a cool temperature, remove the radiator cap, connect the gage, and apply normal system operating pressure. Do not exceed 138 kPa (20 psi). Watch the gage needle for an indication of a leak, and examine the radiator and other cooling system parts for escaping coolant.

Repair all hose and hose connections as required. Check the radiator cap to ensure that it will maintain the correct pressure.

If the radiator leaks during the pressure test, mark the leak area.

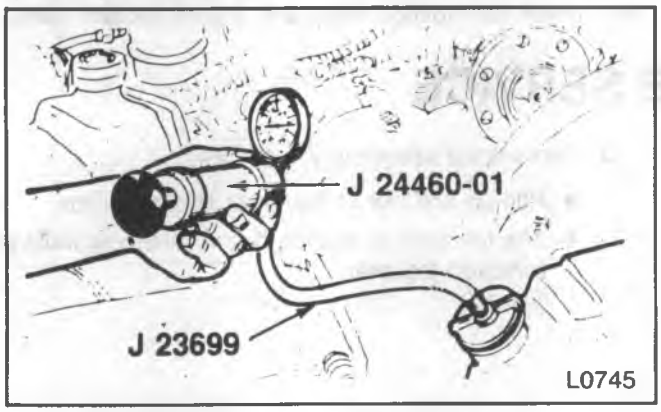

Figure 4—Pressure-Testing the Radiator

Off-Vehicle Leak Testing

NOTICE: Do not use boil-out tanks or vats or other tanks that have been used for copper and brass radiators when servicing aluminum/plastic radiators. The flux, acid, and caustic cleaners remaining in these tanks will attack the aluminum and cause radiator failure. A separate test tank containing clean water is recommended for servicing aluminum/plastic radiators.

1. Install test fittings or rubber test caps in the inlet and outlet necks and seal the oil cooler fittings with metal plugs to protect the cooler and keep the fluid from running out (figure 5).
2. Attach the pressure tester and gradually apply air pressure until 138 kPa (20 psi) is attained. Do not exceed 138 kPa (20 psi). Check the pressure gage to see if there is a pressure loss. To ensure that there are no small leaks, run water over the repair area and look for bubbles (a mild detergent is helpful).

   If a large water tank is available, submerge the radiator and check for air bubbles.

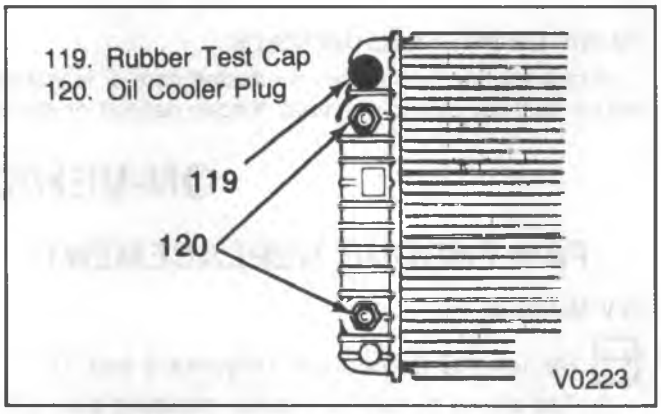

Figure 5—Aluminum Radiator and Oil Cooler Plugs

MAINTENANCE

Check the outside of the radiator for bent fins or signs of leakage. Repair leaking radiator cores, but do not seal temporarily with a sealer type antifreeze or coolant additive. Remove any stones between the fins. Clean loose debris and road film from the radiator core with a quality grease solvent and compressed air. Direct the stream of solvent at the front of the core for more efficient cleaning.

To ensure a thorough cleaning, remove the grille, fan guard and fan shroud.

Remove the radiator cap and look for plugging and scale on the inside of the tank. Replace a badly plugged radiator. Test the radiator and system as described in ENGINE COOLING (SEC. 6B1).

1. Check the coolant level. If low, add recommended coolant as required.
2. Check the hose connections and tighten the clamps if leakage is evident. Replace cracked, stripped or corroded clamps.
3. Check the coolant hoses for spongy or checked appearance. Replace deteriorated hoses or bursting could occur, which would result in coolant loss and extensive engine damage due to overheating.
4. Check the radiator core for leaks and for accumulation of dirt which may obstruct the air passages and reduce heat transfer.
5. Check the surge tank or recovery tank for leaks. Plastic tanks may develop cracks from damage by flying objects. Check metal tanks at the weld seams.

6. Inspect the radiator rubber mountings and bumpers for deterioration and replace as necessary. Check the mounting bolts, supports, braces, tie rods and stabilizer rods. Components should be securely refastened in place if mounting bolts are missing, loose or stripped. Also check for damage to the core, side flanges and supporting components.
7. Check for clearance between the fan blades, core and shroud. Check the fan attaching bolts for tightness and that none are missing. Replace the fan if any blade is bent. The distance between the blades and shroud should be equal around the perimeter of the shroud. Adjust as necessary after any adjustment has been made to the fan or the fan mounting bracket and hub.
8. Inspect the filler cap seal for evidence of cracking, separation or deterioration. Replace as required.
9. To assist in maintaining efficient heat dissipation, an occasional external flushing with water will remove the majority of dirt accumulation and foreign matter from between core fins. Direct water under moderate pressure from behind the core to force debris out in the opposite direction of its entry. Direct the water stream in line with the fins to reduce the possibility of bending them.

RADIATOR INTERNAL DEPOSITS

A radiator that has a dirty, obstructed core or is leaking will cause the engine to overheat. A scale deposit inside the radiator is a result of using hard, high mineral content water in the cooling system. The effect of heat on the minerals in the water causes the formation of scale, or hard coating, on metal surfaces within the radiator, thereby reducing the transfer of heat. Some hard water will produce a silt-like deposit which restricts the flow of water. This must be flushed out at least twice a year — more often if necessary.

SCALE REMOVAL

To remove the hardened scale, a direct chemical action is necessary. A flushing compound at the specified rate of 30 grams per liter (4 oz. per gallon) of radiator capacity should be added to the coolant water in the form of a dissolved solution while the engine is running. Run the engine for 15 minutes, then drain the solution and flush the system with clean water.

There are various types of flushing compounds commercially available. They should be obtained from a reliable source. Most compounds attach metals and should not remain in the engine for more than a few minutes. Use a neutralizer after a descaling solvent is used.

For extremely hard stubborn coatings, such as lime scale, use a stronger solution. The corrosive action of a stronger solution will affect the tin metals of the radiator, thereby reducing its operating life. A complete flushing and rinsing is mandatory and must be accomplished skillfully.

After using the solvent and neutralizer and flushing the cooling system, drain the system and fill it with clean, soft water and the coolant recommended in MAINTENANCE AND LUBRICATION (SEC. 0B). After filling the cooling system, check for radiator, hose and engine coolant leaks.

ON-VEHICLE SERVICE

FAN SHROUD REPLACEMENT

R/V MODELS

Remove or Disconnect (Figures 6 and 7)

1. Fan shroud to radiator retainer attaching bolts (60).
2. Fan clutch to water pump hub attachments.
   - Refer to ENGINE COOLING (SEC. 6B1).
3. Fan shroud assembly (61 and 64).
   - Pull up and out of the lower retaining clips.
   - The fan shroud and fan clutch assembly must be removed together.

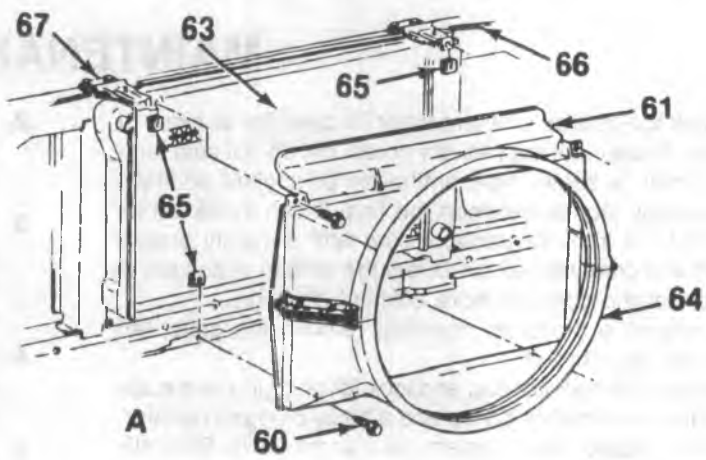

A. 5.7L V8
60. Bolt
61. Upper Fan Shroud
63. Radiator
64. Lower Fan Shroud
65. Clip Nut
66. Radiator Support
67. Radiator Mounting Bracket

Figure 6—Fan Shroud—5.7L Engines (R/V Models)

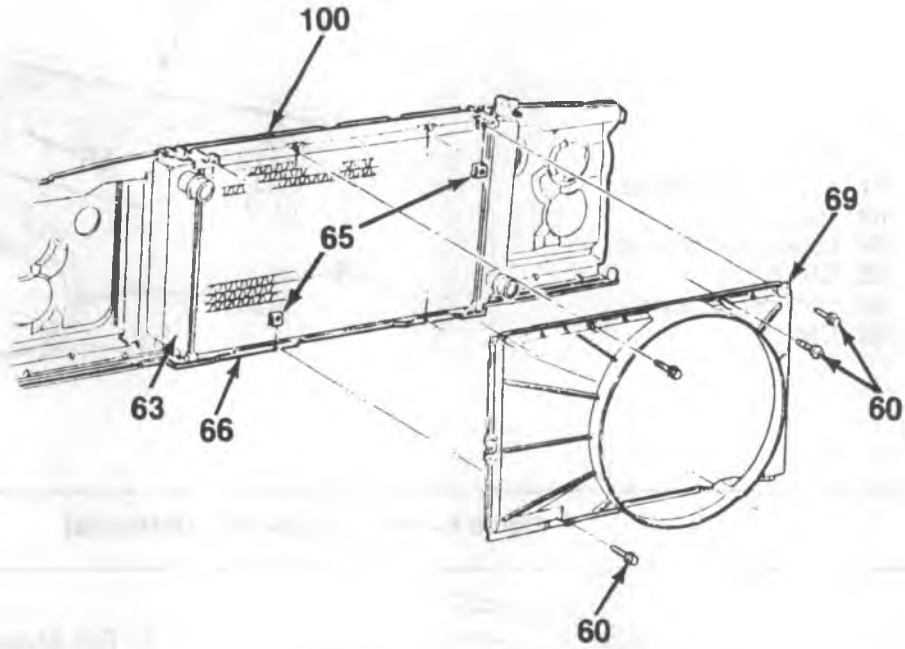

Figure 7—Fan Shroud—6.2L and 7.4L Engines (R/V Models)

Install or Connect (Figures 6 and 7)

1. Lower fan shroud (64) and fan clutch.
   - Position along the back of the radiator (63).
   - Make sure the lower edge fits into the lower retaining clips.
2. Fan clutch to water pump hub attachments.
   - Refer to ENGINE COOLING (SEC. 6B1).
3. Shroud (61) to the radiator retainer attaching bolts (60).

Tighten

- Bolts (60) to 6 N•m (53 in. lbs.).

P-MODELS

Remove or Disconnect (Figures 8 and 9)

1. Vacuum reservoir (if equipped).
   - Refer to AIR CONDITIONING (SEC. 1B).
2. Windshield washer jar and its bracket.
3. Fan shroud retaining bolts as necessary (60 and/or 150 and/or 155).
4. Radiator mounting bracket (67).
5. Dipstick from the engine.
6. Dipstick from the automatic transmission (if equipped).
7. Radiator hose strap from the fan shroud (61).
8. Fan from the water pump.
   - Leave the pulley in place.
   - Refer to ENGINE COOLING (SEC. 6B1).
9. Fan and the fan shroud together.

Install or Connect (Figures 8 and 9)

1. Fan and the fan shroud together.
2. Fan to the water pump.
   - Refer to ENGINE COOLING (SEC. 6B1).
3. Radiator hose strap to the fan shroud.
4. Dipsticks into the engine and automatic transmission (if equipped).
5. Radiator mounting bracket (67).
6. Bolts (150).

Tighten

- Bolts (150) to 17 N•m (13 ft. lbs.).
- Bolts (150) for 4.3L engine to 27 N•m (20 ft. lbs.).

7. Fan shroud retaining bolts (60 and/or 155).

Tighten

- Bolts (60 and/or 155) to 6 N•m (53 in. lbs.).

8. Windshield washer jar and its bracket.
9. Vacuum reservoir (if equipped).
   - Refer to AIR CONDITIONING (SEC. 1B).

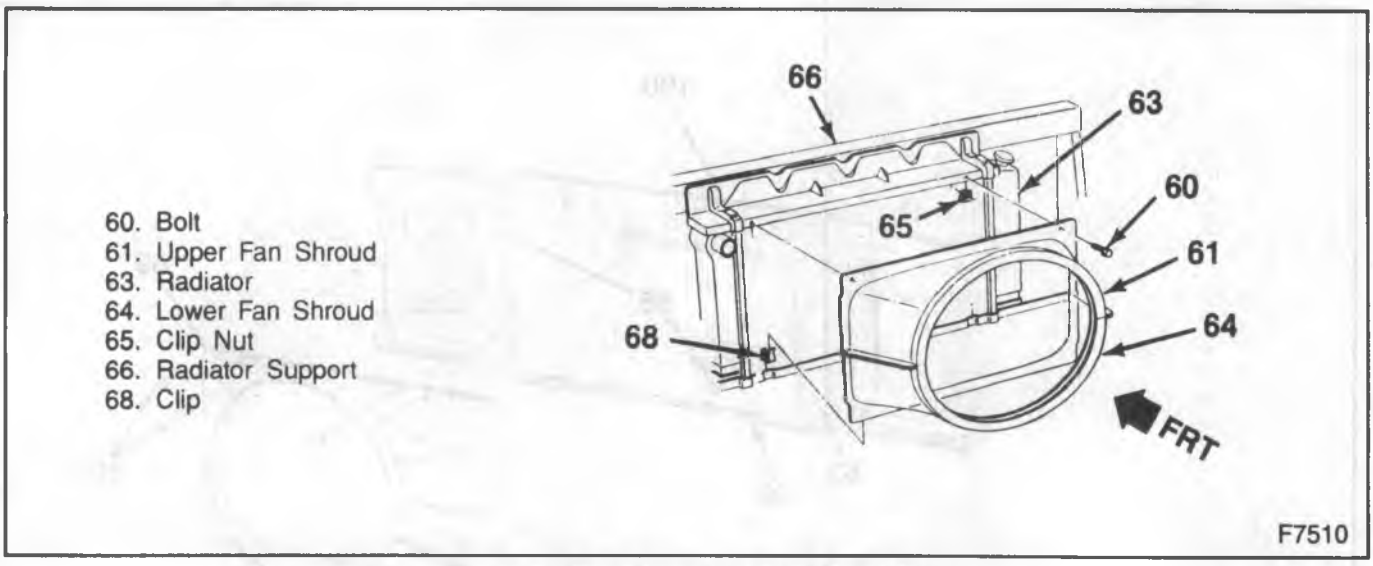

Figure 8—Fan Shroud—4.3L (P-Models)

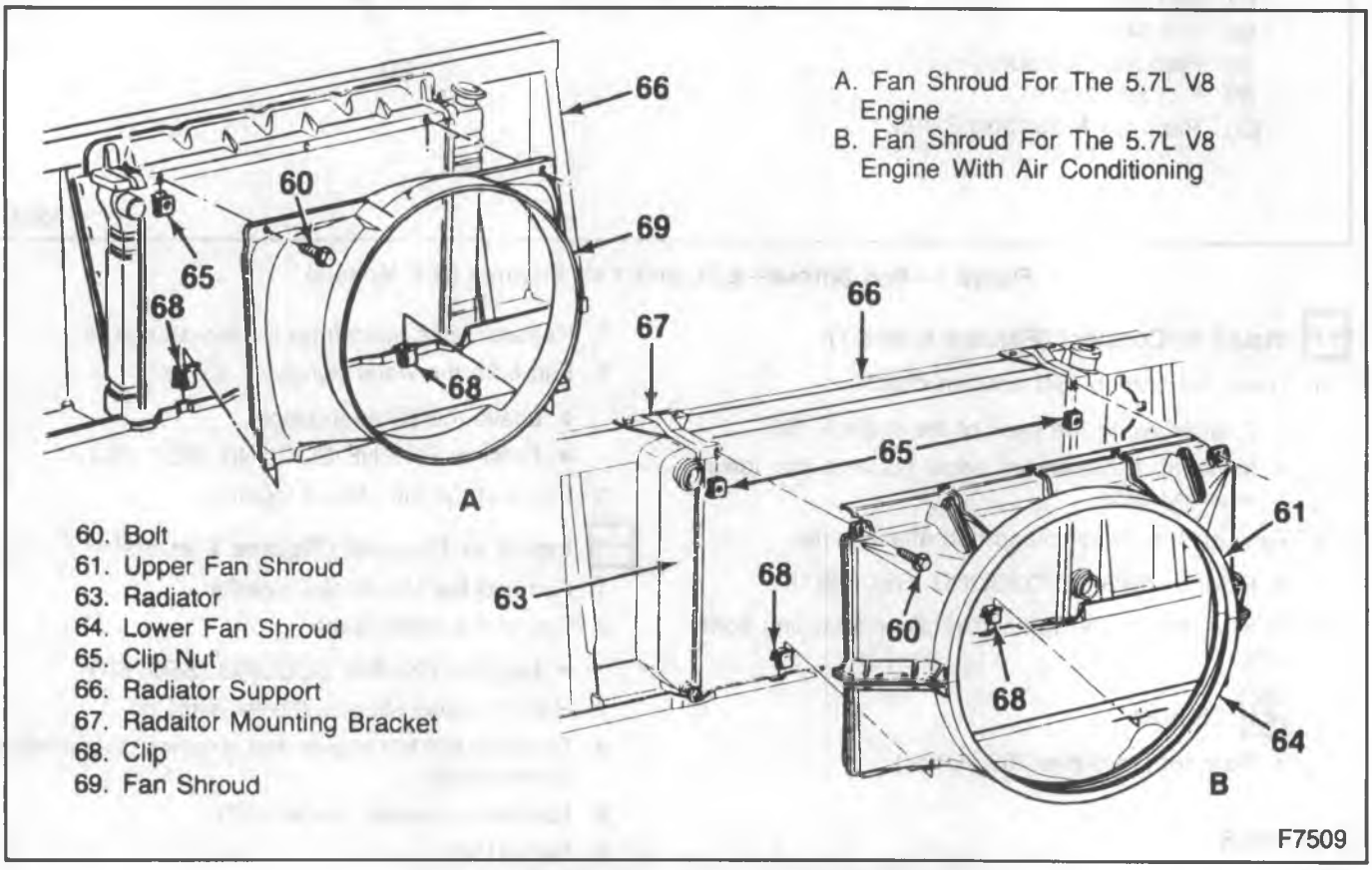

Figure 9—Fan Shroud—5.7L Engines (P-Models)

P-MODELS — 6.2L ENGINE

Remove or Disconnect (Figure 10)

1. Air cleaner intake.
   - Rotate the snorkel up.
2. Fan shroud bolts (60).
3. Hood latch cable.
4. Windshield washer bottle.
5. Upper fan shroud (61).

Install or Connect (Figure 10)

1. Upper fan shroud (61).
2. Windshield washer bottle.
3. Hood latch cable.
4. Fan shroud bolts (60).

Tighten

- Bolts (60) to 6 N•m (53 in. lbs.)

5. Air cleaner intake.

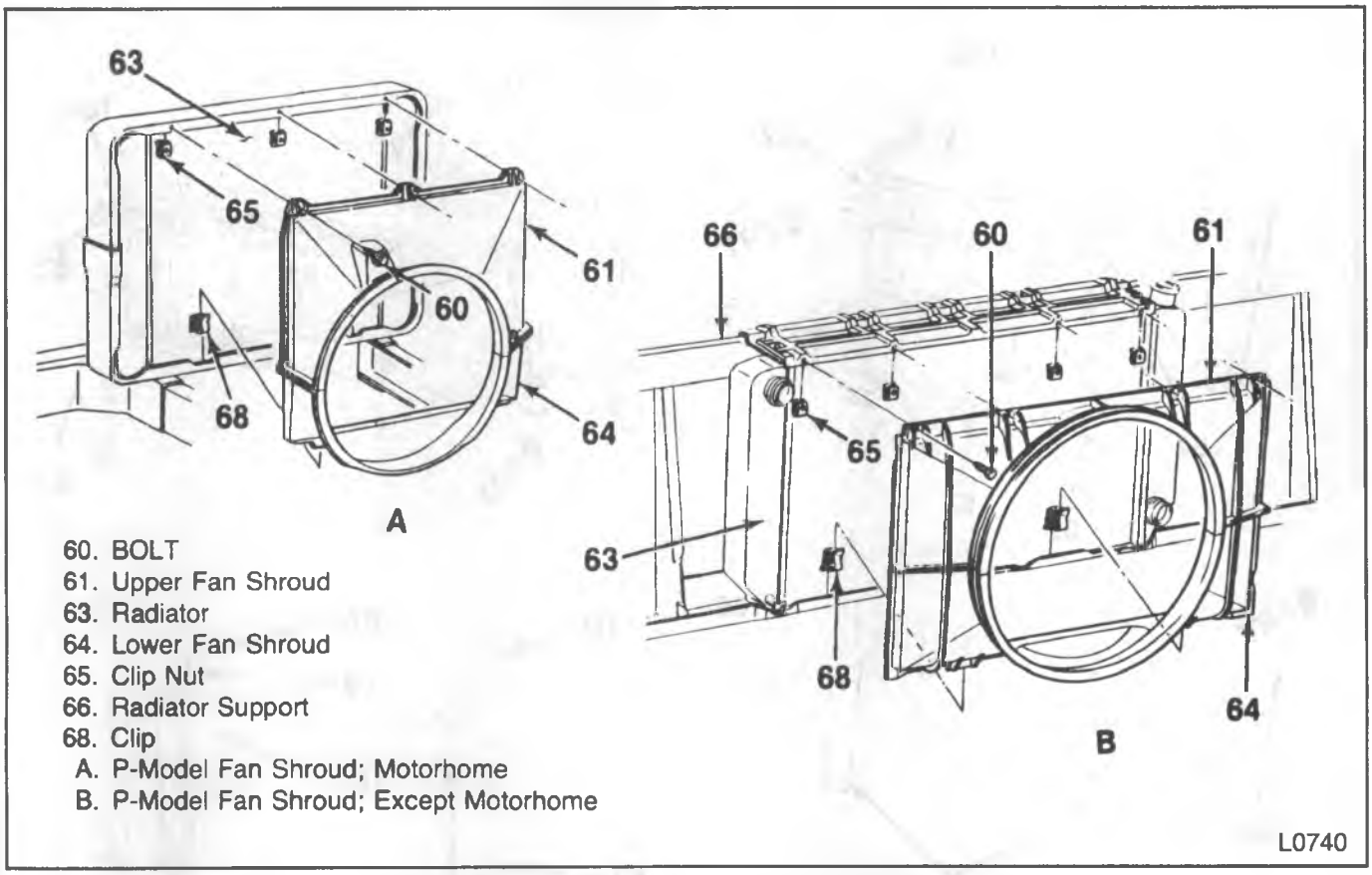

Figure 10—Fan Shroud—6.2L and 7.4L Engines (P-Models)

RADIATOR REPLACEMENT

The type of radiator core mounting varies according to model and engine type. The radiator assembly includes a shroud, and may include an oil cooler in the core. Some models have a separate power steering oil cooler attached in front of the radiator core. On models so equipped it may be necessary to remove the oil cooler to facilitate removal of the radiator core. Refer to POWER STEERING (SEC. 3B3) for oil cooler removal and installation.

R/V AND P-MODELS (EXCEPT 6.2L DIESEL)

Remove or Disconnect (Figures 11 through 13)

- Coolant from the radiator.

1. Radiator inlet and outlet hoses.
2. Overflow hose from the radiator.
3. Fan shroud.
   - Refer to "Fan Shroud Replacement" in this section.
4. Transmission cooler lines.
5. Radiator from the vehicle.
   - Retainers from the radiator support.
   - Retainers from the upper mounting panel (R/V Models).

Install or Connect (Figures 11 through 13)

1. Radiator on the vehicle.
   - Radiator support on the upper mounting panel.

   Tighten

   - Fasteners to "Specifications" at the end of this section.
2. Transmission cooler lines.
3. Fan shroud.
   - Refer to "Fan Shroud Replacement" in this section.
4. Overflow hose to the radiator.
5. Radiator hoses to the radiator.
   - Radiator inlet hose and radiator outlet hose.
6. Coolant to the radiator.
   - Refer to MAINTENANCE AND LUBRICATIONS (SEC. 0B).
7. Remove the radiator pressure cap, start the engine, and let it run until the upper radiator hose becomes hot (thermostat is open).
8. Add coolant with the engine idling until the coolant level reaches the bottom of the filler neck.
9. Install the radiator pressure cap, making sure the arrows line up with the overflow tube.
   - Check for leaks.

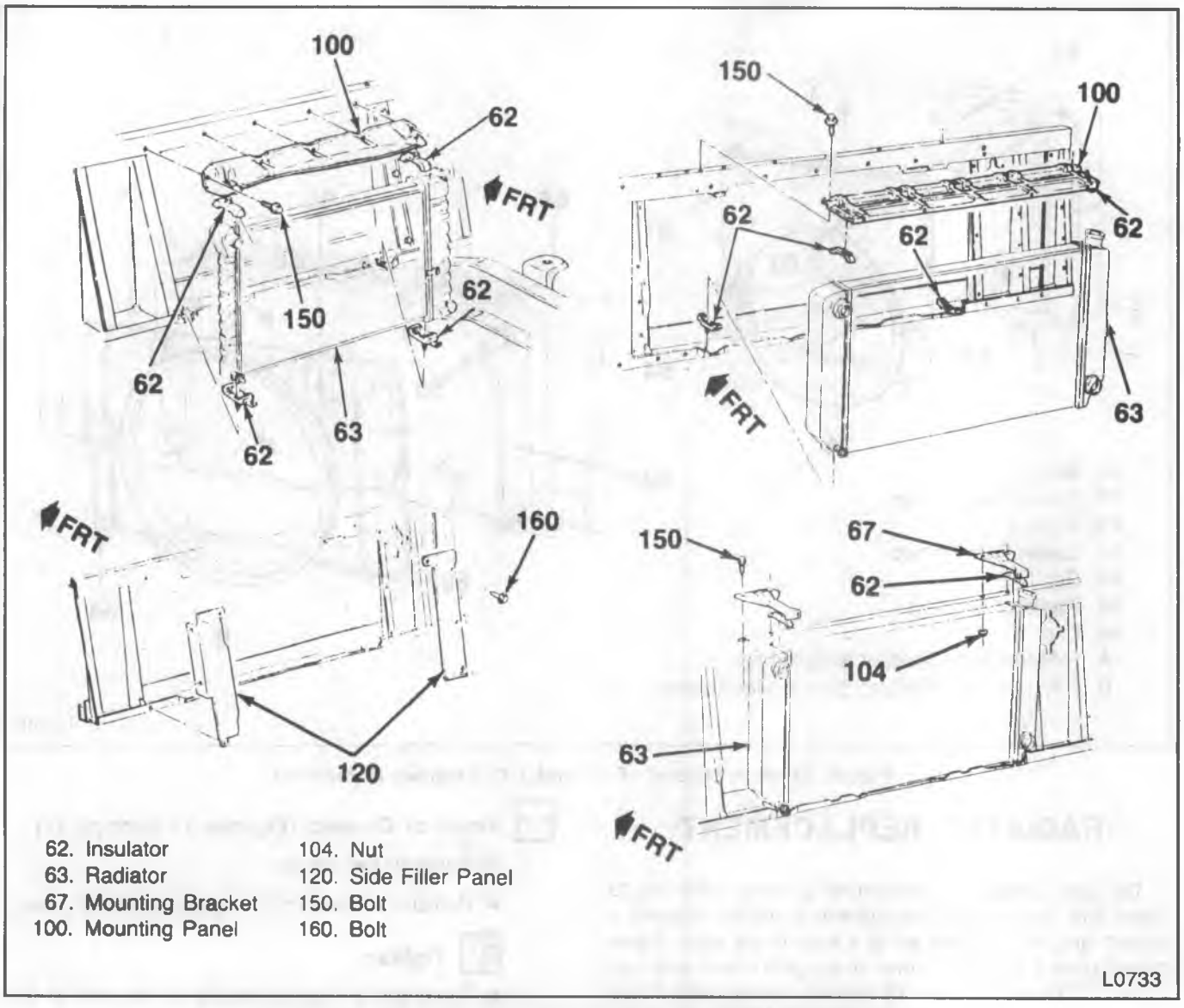

Figure 11—Radiator Mounting (P-Models; Except Motorhome)

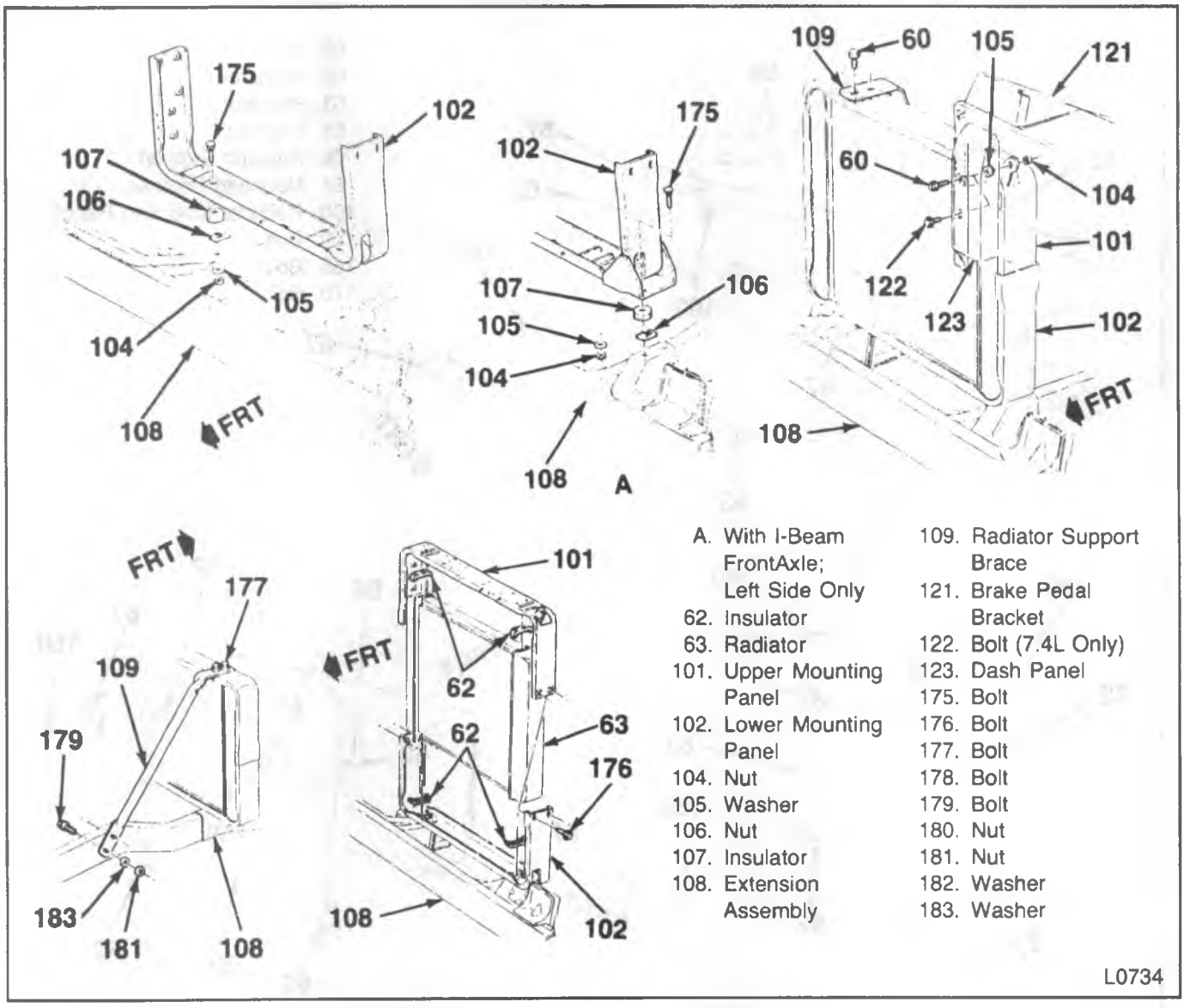

Figure 12—Radiator Mounting (P Motorhome Models)

R/V MODELS (6.2L ENGINE)

Remove or Disconnect (Figure 13)

- Drain the cooling system.

1. Fan shroud.
   - Refer to "Fan Shroud Replacement" in this section.
2. Engine and transmission oil cooler lines.
3. Upper and lower radiator hoses from the radiator.
4. Overflow hose from the radiator.
5. Upper radiator supports.
6. Radiator.

Install or Connect (Figure 13)

1. Radiator to the vehicle.
2. Radiator supports and/or mounting panel.

Tighten

- Fasteners to "Specifications" at the end of this section.

3. Overflow hose to the radiator.
4. Upper and lower radiator hoses to the radiator.
5. Engine and transmission oil cooler lines.
6. Fan shroud.
7. Coolant to the radiator.
8. Remove the radiator pressure cap, start the engine, and let it run until the upper radiator hose becomes hot (thermostat is open).
9. Add coolant with the engine idling until the coolant level reaches the bottom of the filler neck.
10. Install the radiator pressure cap, making sure the arrows line up with the overflow tube.
    - Check for leaks.

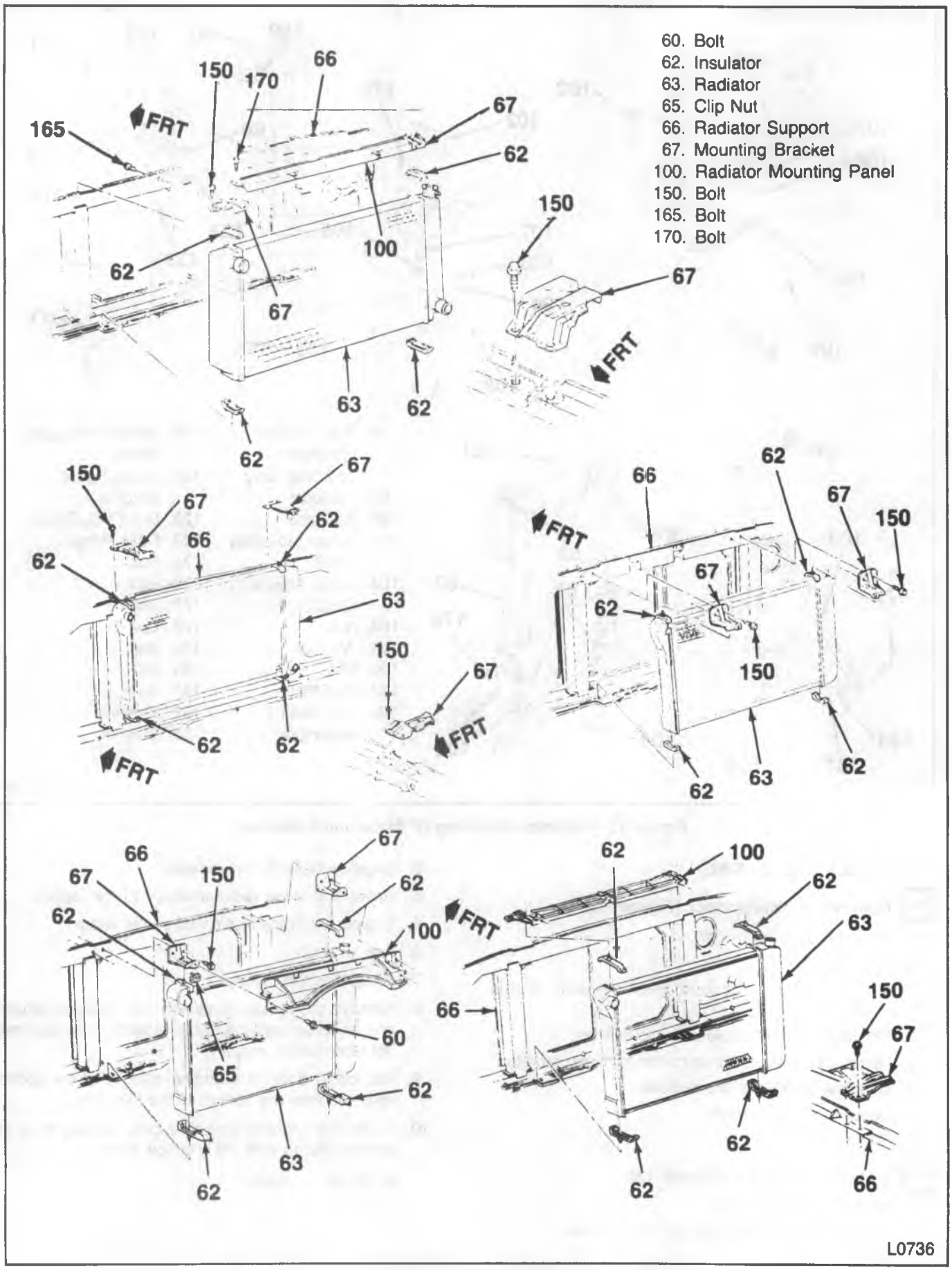

Figure 13—Radiator Mounting (R/V Models)

P-MODELS (6.2L ENGINE)

Remove or Disconnect (Figures 11 and 12)

- Coolant from the radiator.

1. Air intake snorkel.
2. Windshield washer bottle.
3. Hood release cable.
4. Upper fan shroud.
   - Refer to "Fan Shroud Replacement" in this section.
5. Upper radiator hose from the radiator.
6. Transmission cooler lines from the radiator.
7. Low coolant sensor.
8. Overflow hose from the radiator.
9. Engine oil cooler lines from the radiator.
   - Raise the vehicle.
10. Lower radiator hose from the radiator.
    - Lower the vehicle.
11. Master cylinder from the booster.
    - Refer to HYDRAULIC BRAKES (SEC. 5A).
12. Radiator from the vehicle.

Install or Connect (Figures 11 and 12)

1. Radiator into the vehicle.

   Tighten

   - Fasteners to "Specifications" at the end of this section.
2. Master cylinder to the booster.
   - Refer to HYDRAULIC BRAKES (SEC. 5A).

- Raise the vehicle.

3. Lower radiator hose to the radiator.

- Lower the vehicle.

4. Engine oil cooler lines to the radiator.
5. Overflow hose to the radiator.
6. Low coolant sensor.
7. Transmission oil cooler lines to the radiator.
8. Upper radiator hose to the radiator.
9. Upper fan shroud.
   - Refer to "Fan Shroud Replacement" in this section.
10. Hood release cable.
11. Windshield washer bottle.
12. Air intake snorkel.
13. Coolant to the radiator.
    - Remove the radiator pressure cap, start the engine and let it run until the upper radiator hose becomes hot (thermostat is open).
    - Add coolant with the engine idling until the coolant level reaches the bottom of the filler neck.
14. Radiator pressure cap, making sure the arrows line up with the overflow tube.
    - Check for leaks.

PRESSURE CAP

A pressure-vent cap allows a build-up of 103 kPa (15 psi) in the cooling system. This pressure raises the boiling point of the coolant to about 125°C (257°F) at sea level. Do not remove the pressure cap to check the engine coolant level; check the coolant visually at the see-through coolant reservoir. Add coolant only to the reservoir.

CAUTION: As long as there is pressure in the cooling system, the temperature can be considerably higher than the boiling temperature of the solution in the radiator without causing the solution to boil. Removal of the pressure cap while the engine is hot and the pressure is high will cause the solution to boil instantaneously and possibly with explosive force, spewing the solution over the engine, fenders and person removing the cap. If the solution contains flammable anti-freeze such as alcohol (not recommended for use at any time), there is also the possibility of causing a serious fire.

The pressure-type filler cap contains a blow-off or pressure valve and a vacuum or atmospheric valve (figure 14). The pressure valve is held against its seat by a spring of predetermined strength which protects the radiator by relieving the pressure if an extreme case of internal pressure should exceed that for which the cooling system is designed. The vacuum valve is held against its seat by a light spring which permits opening of the valve to relieve vacuum created in the system when it cools off and which otherwise might cause the radiator to collapse. A rubber asbestos gasket is added to the diaphragm spring at the top of the cap.

The design of the pressure cap is to discourage inadvertent removal. It must be pushed downward before it can be removed. The cap and filler neck meet at right angles in a safety detent position. The cap locking tang is flat and the filler neck has a straight tab (figure 15). To turn the cap beyond this point and remove the cap, the cap must be pressed down to clear the safety detent and turned counterclockwise. Also, embossed on the cap are a caution against its being opened and arrows indicating the proper closed position (figure 16).

The seal of the pressure cap and the operation of the pressure relief valve can be checked using a conventional cooling system test kit such as J 24460-01 (figure 17).

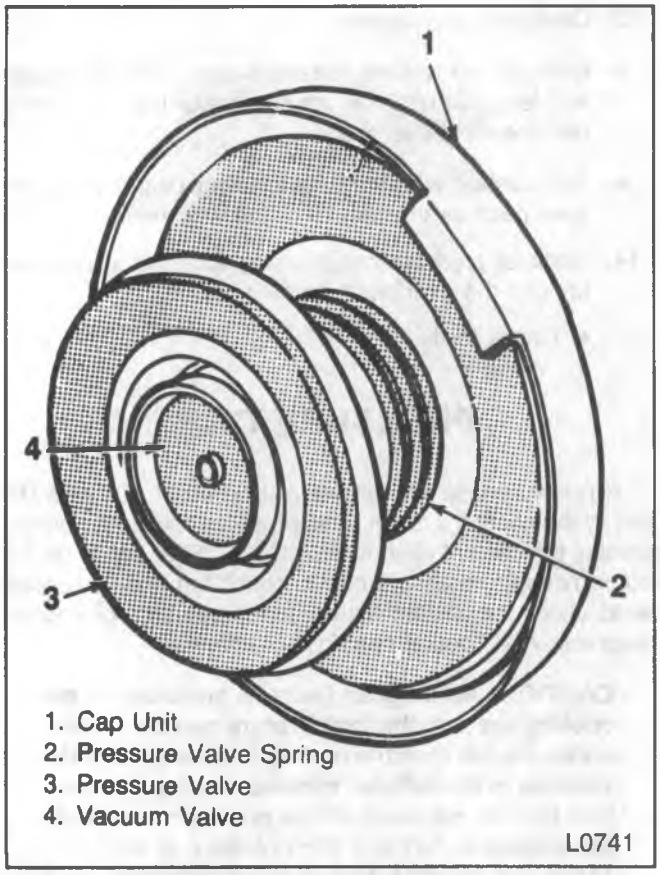

Figure 14—Pressure Cap

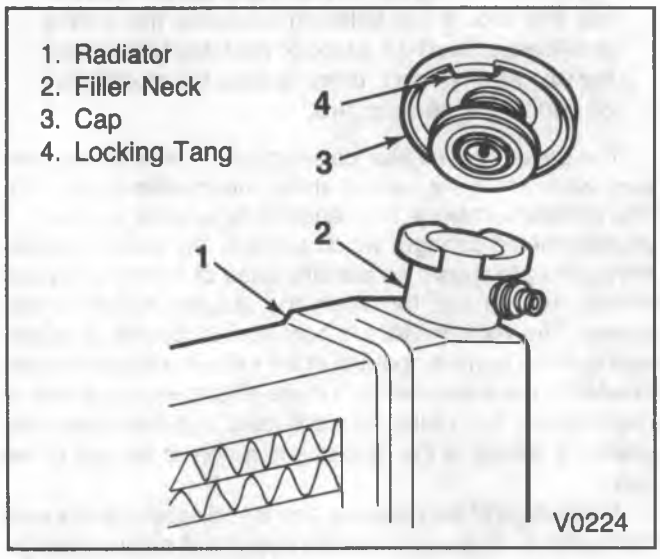

Figure 15—Pressure Cap and Filler Neck

Figure 16—Pressure Cap Alignment Arrows

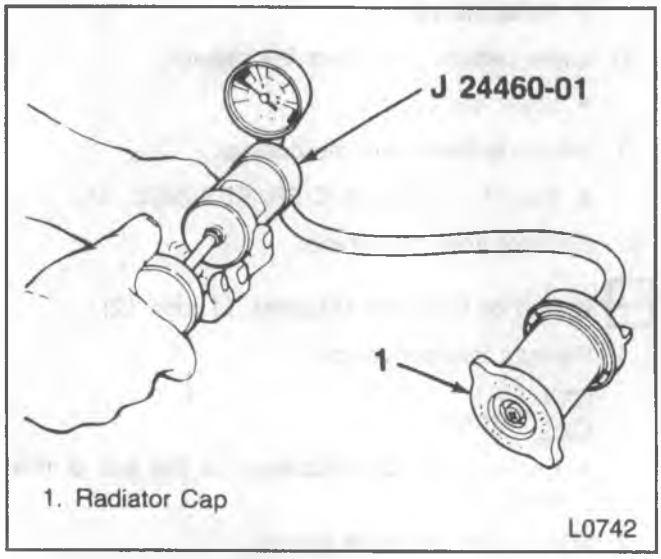

Figure 17—Testing the Pressure Cap

COOLANT RECOVERY SYSTEM

The coolant recovery system consists of a reservoir, cap and interconnecting hose.

Maintain the coolant level between the "HOT LEVEL" and "COLD LEVEL" markings on the tank.

SURGE TANK

The tank serves as a coolant reservoir for the radiator core. Hoses and pipes connect the tank to the radiator and system filler cap.

At regular intervals, check the tank and connecting hoses for leaks. Keep the hose clamps and mounting bolts tightened.

Check the mounting brackets and supports for cracks and broken attaching parts. Check insulators and straps; if deteriorated or loose from wear, replace.

ALUMINUM RADIATOR REPAIR

DESCRIPTION

This radiator utilizes an aluminum core with plastic side tanks. The core and side tanks can be replaced separately and core repair is easily made with the hot-melt adhesive method. A transmission oil cooler is located in one of the side tanks. The oil coolers can be replaced. The drain cock is located on the lower part of one of the tanks. The drain cock is also serviceable.

CORE

The core is made of aluminum and is of the crossflow design. It utilizes large tubes that resist plugging, and repairs to the tubes and core are easily made using the hot-melt adhesive method.

The core is attached to the tanks by clinched tabs on the core that can be bent back if tank or core replacement is required.

If the damage to a tube is too severe, a tube can be blocked or plugged as explained in "Tube Blocking" in this section. No more than two tubes should ever be blocked on a core. Also replace the core if more than three tabs are broken on one side or if two adjacent tabs are broken.

TANKS

The tanks are attached to the core by clinched tabs attached to the sides of the core. The clinched tabs can be bent back if the tanks need to be removed from the core. Bend the tabs back only enough to remove the tank. Overbending will weaken the tabs.

A high-temperature rubber gasket is used to seal the mating surface between the core and the tank (figure 18). The gasket must be replaced any time a tank is removed from the core.

TRANSMISSION OIL COOLER

Replace the oil cooler by removing the tank from the core.

A leaking oil cooler gasket can be replaced without removing the tank from the core.

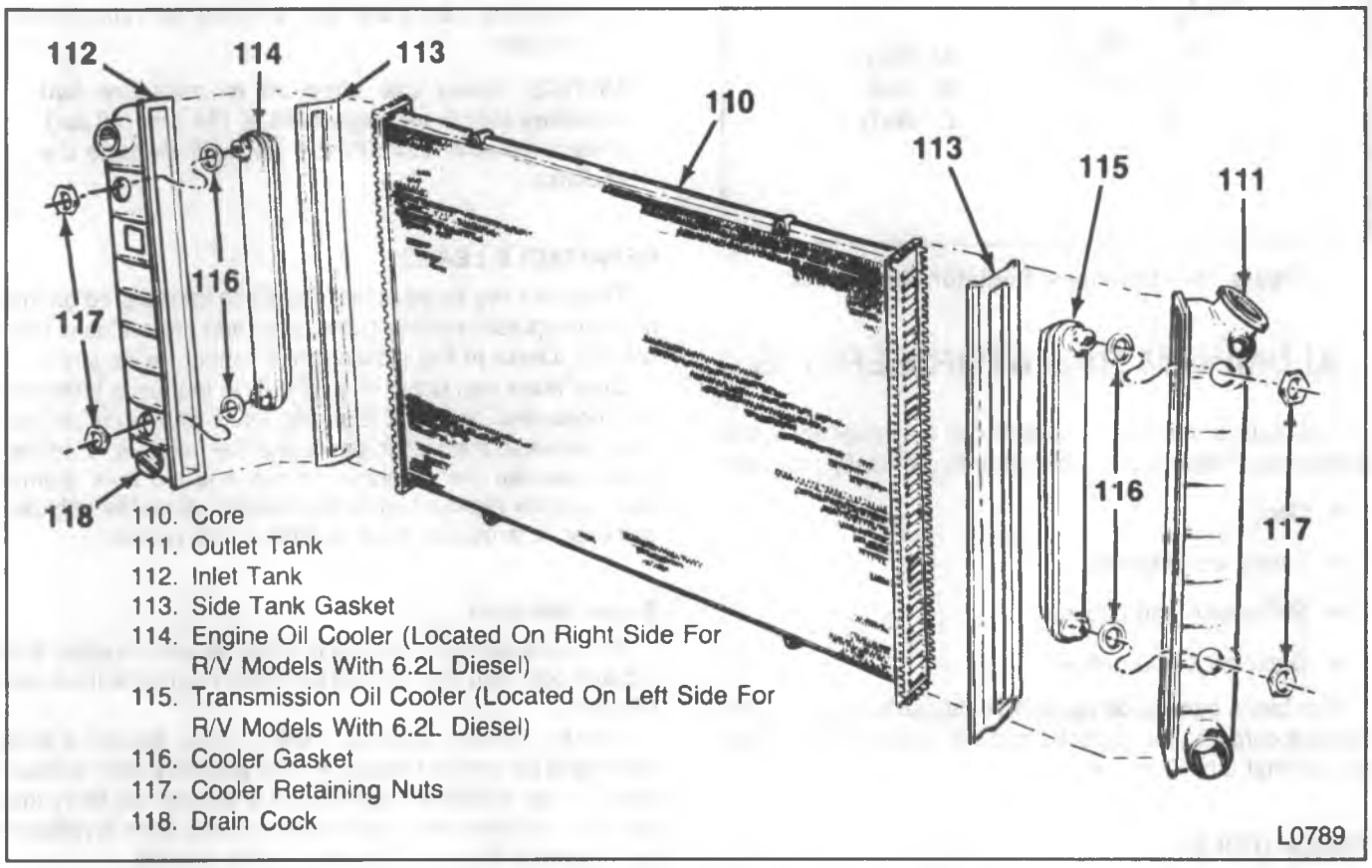

Figure 18—Radiator Assembly

DRAIN COCK

The aluminum/plastic radiator utilizes a two piece plastic drain cock and a rubber seal. The drain cock is serviceable (figure 19).

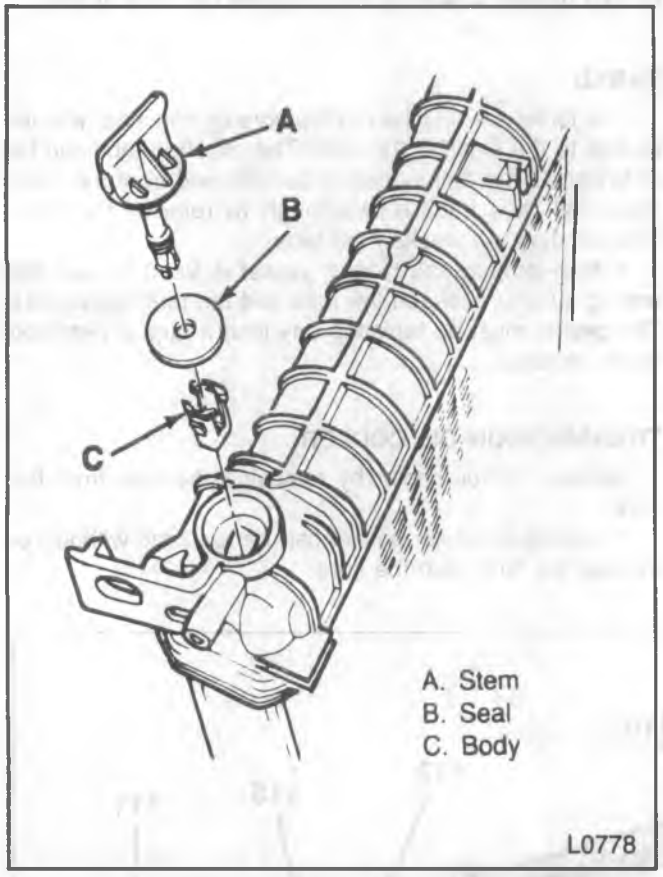

Figure 19—Aluminum Radiator Drain Cock

ALUMINUM RADIATOR SERVICE

The aluminum/plastic radiator can be repaired at the dealership. The following components are easily replaced:

- Core.
- Tanks and gaskets.
- Oil coolers and gaskets.
- Drain cock and gasket.

The **tanks cannot be repaired** if broken or cracked. The radiator core can be replaced and the new core used with the original tanks and oil cooler.

PRECAUTIONS

As with all cooling system service, take measures to prevent personal injury and damage to the system.

CAUTION: To help avoid the danger of being burned, do not remove the radiator cap while the engine and radiator are still hot. Scalding fluid and steam can be blown out under pressure if the cap is taken off too soon.

NOTICE: DO NOT USE "BOIL OUT" TANKS OR VATS. Common service methods for copper or brass radiators may destroy an aluminum radiator. Do not use caustic or lye cleaning solutions for aluminum radiators. USE CLEAN WATER WHEN SERVICING ALUMINUM RADIATORS.

- Do not open the hood if you can see or hear steam or coolant escaping from the engine compartment.
- Do not remove the radiator cap if the radiator feels warm.
- Do not remove the radiator cap or coolant recovery tank cap if the coolant in the recovery tank looks like it is boiling.
- Wear eye protection.
- Wear gloves to protect your hands against excessive heat or the effects of chemicals on your skin.
- Prevent dirt and water from entering the transmission oil cooler.

NOTICE: Never use shop air to pressure test radiators that is not regulated at 138 kPa (20 psi). Pressures over 138 kPa (20 psi) will damage the radiator.

REPAIRABLE LEAKS

There are two types of leaks that can be repaired on the aluminum/plastic radiator: core leaks and gasket leaks (figure 20). Leaks in the plastic tanks cannot be repaired.

Core leaks can occur in a tube or in the joints between the tubes and headers. Gaskets leaks can occur in the joints between the plastic tanks and the headers, or in the joints between the oil cooler fittings and the tank. Some leaks can be repaired while the radiator is on the vehicle; however, it is usually best to remove the radiator.

Repair Methods

There are several methods that can be used to repair the radiator core, but the hot-melt adhesive method is the most effective.

The kit contains adhesive sticks, cotton swabs, a wire brush and the primer (figure 21). The adhesive stick is reusable, has an indefinite shelf life and is waste-free. Store the materials in the sealed kit container to keep them dry. Refer to "Aluminum Radiator Service" in this section.

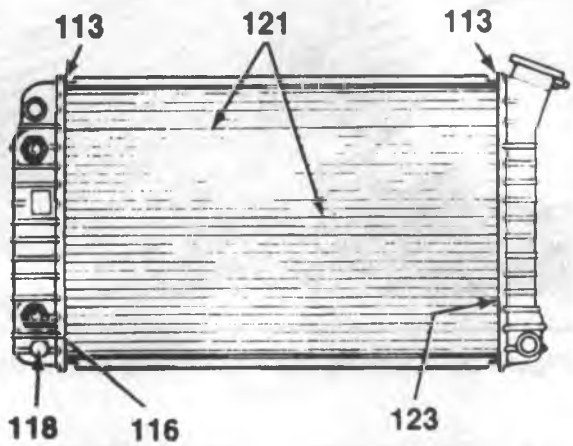

113. Tank Gasket
116. Oil Cooler Gaskets
118. Drain Cock Gasket
121. Core Tubes
123. Joint Betweeen Tube And Header

L0780

Figure 20—Possible Leak Areas

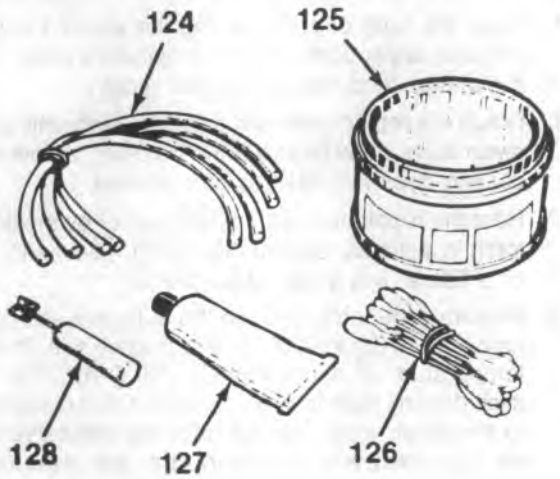

124. Adhesive Sticks
125. Kit Container
126. Cotton Swabs
127. Primer
128. Wire Brush

F0942

Figure 21—Hot Melt Repair Kit

SPECIAL PREPARATION

For damaged areas that are between the cooling fins, it may be necessary to remove some of the fins. Do not remove more fins than necessary. Usually 6 mm (1/4-inch) beyond the leak or damage area is enough to make an effective repair (figure 22).

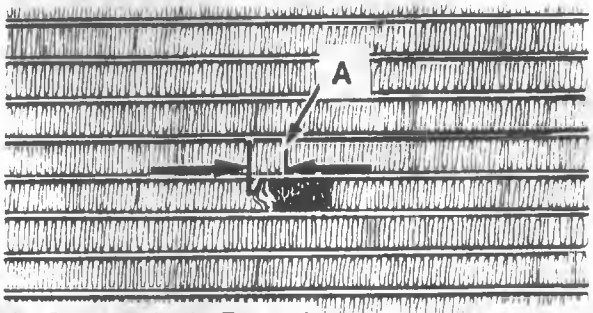

A. 6mm (1/4-inch) Beyond The Damaged Area

F0946

Figure 22—Removing the Fins from a Damaged Area

TUBE BLOCKING

If a tube is severely damaged, it can be blocked off (figure 23).

NOTICE: Do not block off more than two tubes in a radiator. Blocking off more than two tubes will reduce the cooling capability of the system.

Cut the tube off 6 mm (1/4-inch) from the header and pinch shut before it is cleaned and sealed. Refer to "General Core Sealing".

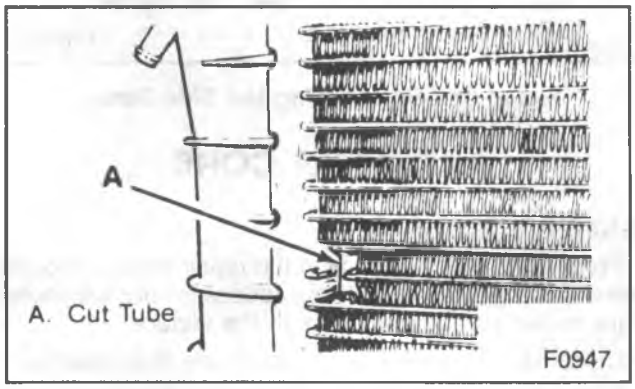

A. Cut Tube

F0947

Figure 23—Tube Blocking

HEADER REPAIR

If the header or a tube near the header requires a repair, the side tank does not have to be removed. Place a damp cloth against the side tank where the repair has to be made (figure 24). The side tank can be submerged in a tank of water up to the header (figure 25).

NOTICE: One of these procedures has to be used when repairs are made on or near the header to prevent damage to the tank or gasket.

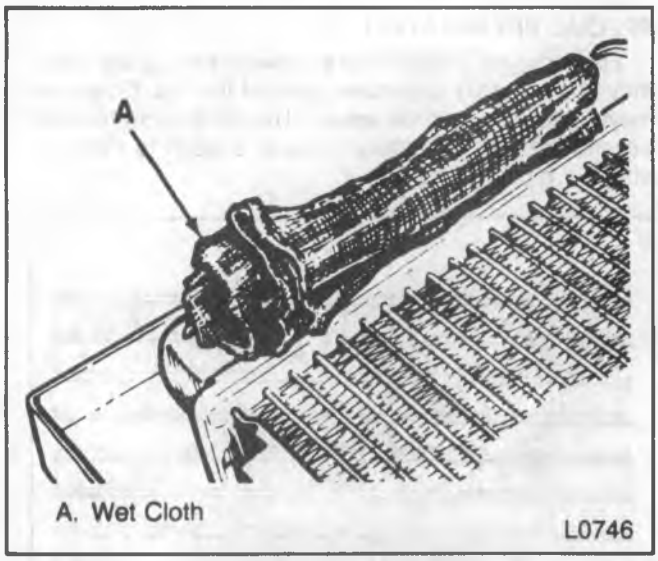

Figure 24—Using A Wet Cloth to Cool the Side Tank

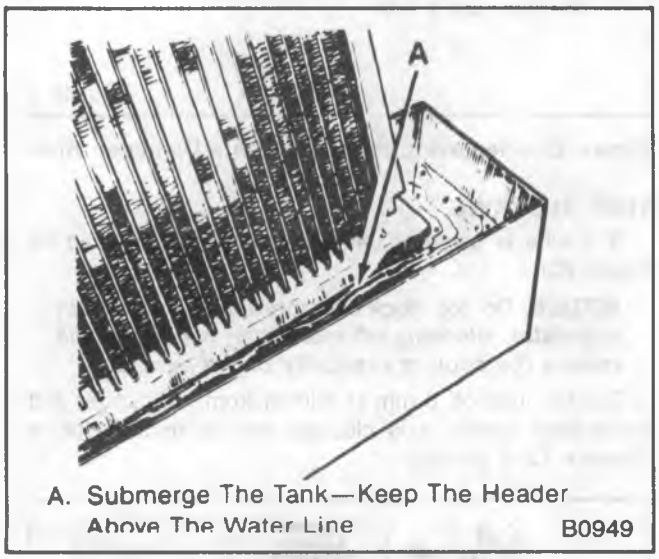

Figure 25—Submerging the Side Tank

RADIATOR CORE

GENERAL CORE REPAIR

Preparation of the surface in the repair area cannot be overemphasized. If the leak area surface is not clean, none of the repair materials will stick to the surface.

1. Position the core so the repair area is accessible.
2. Apply a wet cloth if you are working near the plastic tanks or the joints between the core tubes and header (figure 24), or submerge the tank in water (figure 25).
3. Heat the repair area slightly with a small torch or heat gun to be sure it is dry. **Do not use a blow torch.**
4. Brush the area to be repaired with the small steel brush that is supplied in the kit and blow dust away from the repair are (figure 26).

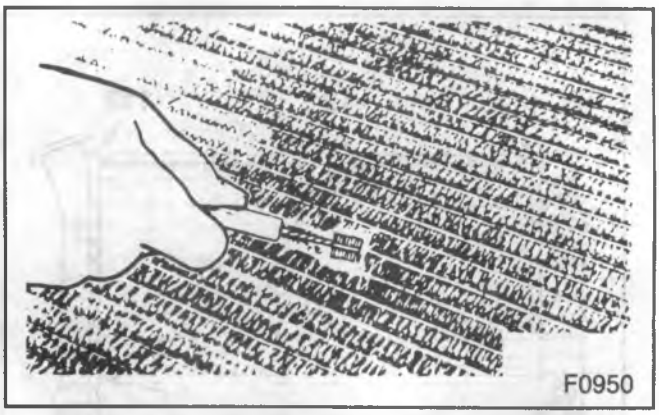

Figure 26—Cleaning the Repair Area with A Steel Brush

CAUTION: The primer contains trichloroethane, a chemical which can cause serious health problems or personal injury if the following directions are not followed:

- **It could be harmful or fatal if swallowed. If swallowed, get medical attention.**
- **Use with adequate ventilation.**
- **In case of eye contact, flush with water and get medical attention.**
- **In case of body contact, wash with soap and water.**
- **Do not mix the primer with water.**
- **Do not heat the primer or expose it to open flame.**

5. Open the tube of primer using the spurred cap or a pin, and apply primer to the repair area only. Use of the primer produces a stronger repair.
6. Scrub the repair area with a cotton swab until a fresh swab stays clean (figure 27). The clear, yellow-brown coating does not have to be removed.
7. Heat the repair area with a heat gun or by moving the torch in a circular pattern (figure 28). Use a soft, small blue flame (like a gas stove flame).
8. Withdraw the torch and rub the adhesive stick on the repair area (figure 29). The adhesive will flow at a temperature of approximately 260°C (500°F). If the stick doesn't start to melt, remove it and reapply heat to the repair area. **Do not heat the adhesive stick, as high heat will burn and char the adhesive.**
9. Continue heating until the adhesive flows and wets the entire repair area and fills the joint. If a hole is in the center of a tube, heat the tube and let the hot surface melt and pull in the adhesive. Using the force of the torch flame or the heat gun air stream can help in guiding the adhesive toward the hole. For leaks between a tube and header, flow the adhesive around the tube and header joint with the tank installed.
10. Heat the repair area until the adhesive is bubble-free and smooth, with a light yellow color. Curing is not required.
11. Test the radiator when cool. If the repair area still leaks, reheat it gently to dry it. Heat and re-flow the adhesive or apply more as necessary to repair the leak.

RECORE

If the radiator core is damaged beyond repair and the other parts are serviceable, install the original inlet and outlet tanks, oil cooler, pressure cap and drain cock, along with the new core and new gaskets.

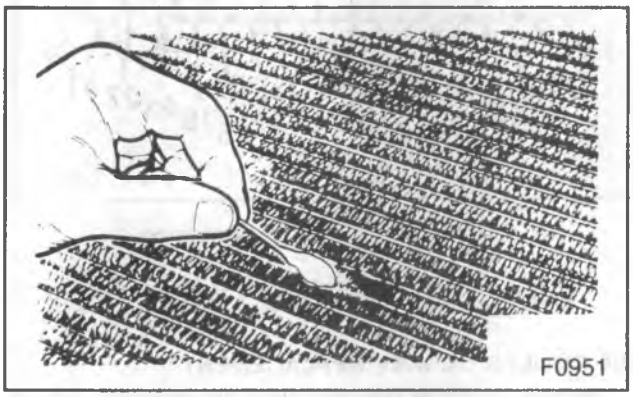

Figure 27—Scrubbing the Area with A Cotton Swab

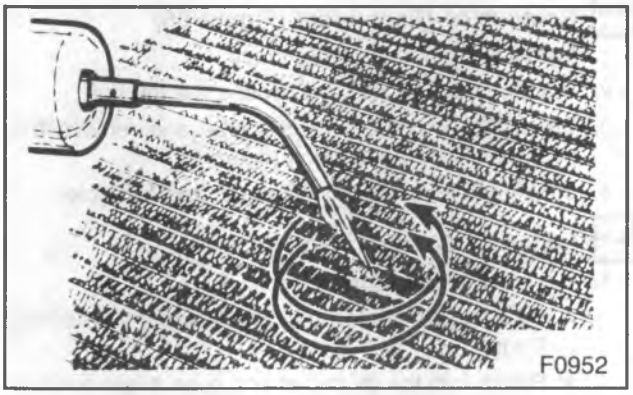

Figure 28—Heating the Repair Area

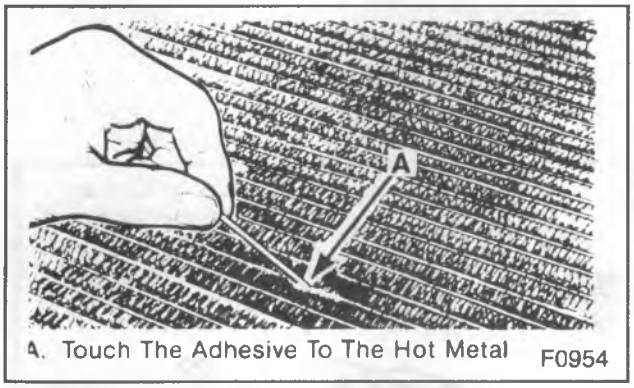

Figure 29—Applying Hot-Melt Adhesive to the Repair Area

TANKS AND GASKETS

TANK GASKET LEAK REPAIR

Tank gasket leaks can be mistaken for tank or header leaks. If a plastic tank leaks from the header joint gasket, tighten the clinch tabs with J 33419-A or locking type pliers (figures 30 and 31). If this method doesn't seal the leak, remove the tank for further inspection.

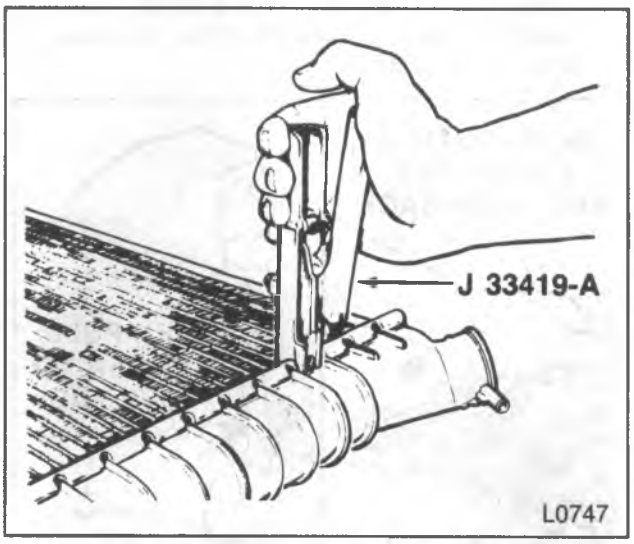

Figure 30—Tightening the Clinch Tabs

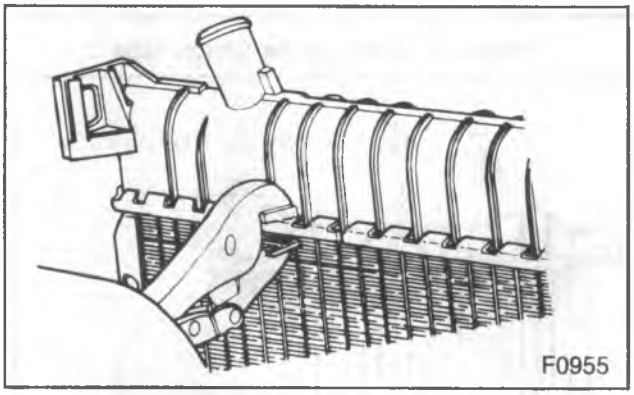

Figure 31—Tightening the Clinch Tabs

1. Pry open the clinch tabs, except those under the inlet, outlet, and filler necks using J 33419-A or a screwdriver (figures 32 and 33). Lift the tabs only enough to allow removal.

NOTICE: Do not over-bend the tabs. Overbending could result in breakage. If there are more than 3 tabs broken on one side of the header, or more than 2 adjacent tabs together, replace the core.

2. Lift the tank and slide it out from under the remaining clinched tab. You may have to tap the tank with your hand to dislodge the gasket. Lift the remaining tab(s) with pliers.
3. Remove and discard the gasket.
4. Clean the header and gasket groove of all dirt and old rubber.
5. Clean the sealing edge of the plastic tank.
6. Examine the header gasket surface and tank flange for leakage, and clean or repair the surface to remove dirt, burrs, and bumps.
7. Remove the oil cooler, if equipped, and install it in the new tank, if used.
8. Dip or coat the new tank gasket in engine coolant and position it on the header surface. The coolant helps hold the gasket in place.

9. Position the tank and gasket to the header, clamp it in place and secure it by bending four clinch tabs as shown in figure 34.

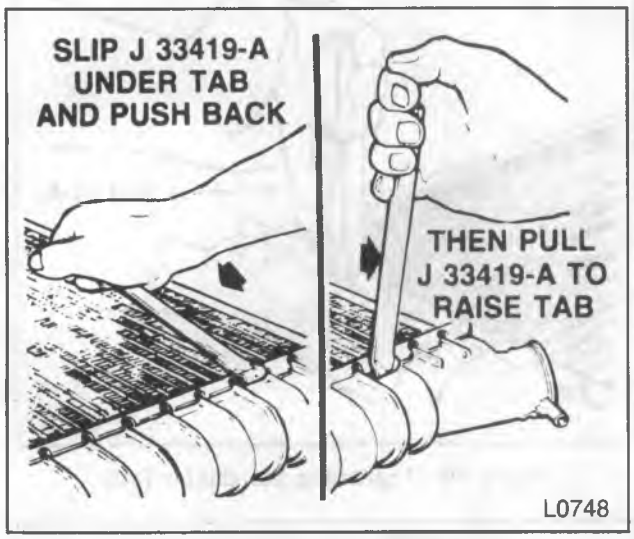

Figure 32—Opening the Clinch Tabs

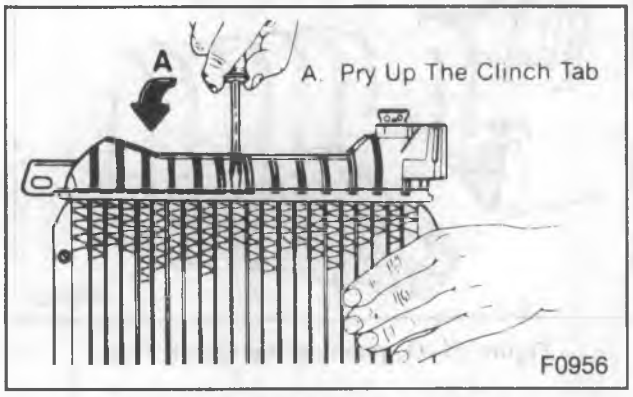

Figure 33—Opening the Clinch Tabs

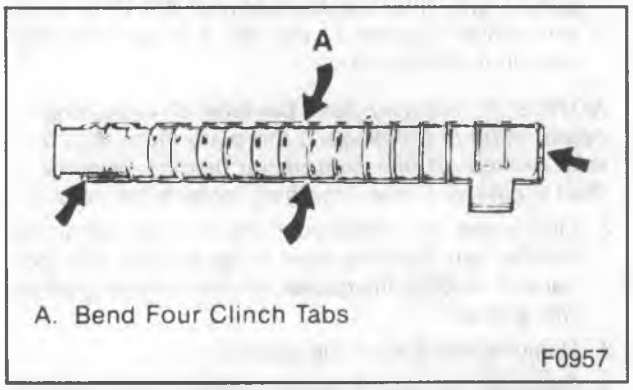

Figure 34—Sealing the Tank to the Radiator Core

10. Clamp remaining clinch tabs around the header using J 33419-A or locking pliers (figures 30 and 31).

NOTICE: Tighten the clinch tabs by using the pattern shown in figure 35.

11. Replace the core if there are more than three tabs broken on one side or two adjacent tabs broken.
12. Install the drain cock (if removed).
13. Test the radiator for leaks.

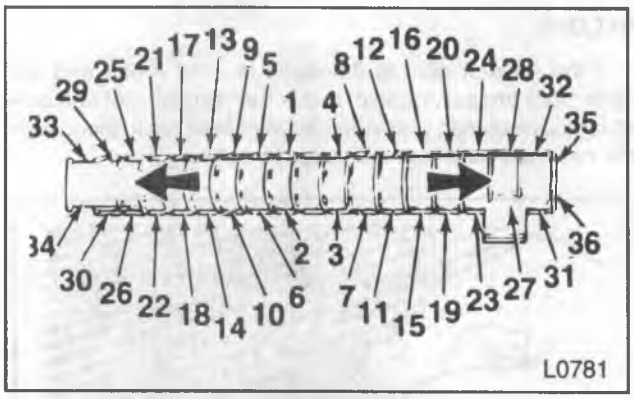

Figure 35—Clinching Sequence

OIL COOLER AND GASKETS

OIL COOLER GASKET REPLACEMENT

Remove the outlet tank to replace the oil cooler. The oil cooler gaskets can be replaced without removing the tank.

Remove or Disconnect (Figure 36)

1. Radiator; lay it on a flat surface.
2. Bottom oil cooler nut and loosen the top nut.
3. Press the oil cooler into the hole and remove the gasket using a small hook (figure 36).
4. Blow-dry all surfaces on the tank and oil cooler.

Install or Connect (Figure 36)

1. Gasket **without lubrication**.
   - Be sure it is seated properly inside the tip of the fitting.
   - Reach into the oil cooler and push it into position against the tank.
2. Oil cooler nuts.

Tighten

- Nuts to 20 N•m (15 ft. lbs.)
- Do not overtighten.

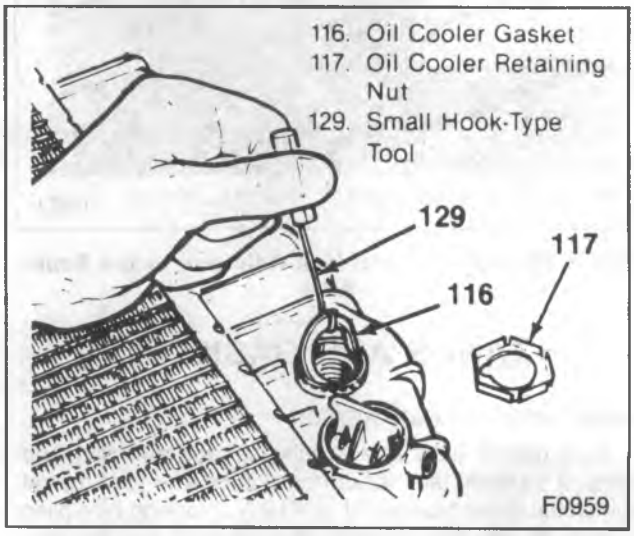

Figure 36—Removing the Oil Cooler Gasket

- Check for leaks.
- Radiator to the vehicle.

OIL COOLER REPLACEMENT

Remove or Disconnect

1. Outlet tank.
2. Nuts from the oil cooler fittings.
3. Oil cooler and gaskets from the tank.

Clean

- The gasket area and dry it.

Install or Connect

1. Gaskets to the oil cooler.
2. Oil cooler to the tank.
3. Nuts.

Tighten

- Nuts to 20 N•m (15 ft. lbs.)

4. Outlet tank.

- Check for leaks.

DRAIN COCK

CAUTION: To help avoid the danger of being burned, do not remove the radiator cap while the engine and radiator are still hot. Scalding fluid and steam can be blown out under pressure if the cap is taken off too soon. Remove the radiator cap before draining the coolant so the coolant is not forced out under pressure.

Plastic Drain Cock

Remove or Disconnect (Figure 19)

- Drain radiator of coolant.

1. Drain cock stem (A).
   - Seal (B) will usually come out attached to stem (A).
2. Drain cock body (C).
   - Squeeze sides of body with fingers or needlenose pliers to disengage body locking tangs from side tank.

Install or Connect (Figure 19)

1. Drain cock body (C).
   - Be sure body is fully seated in side tank and that locking tangs are engaged.
2. Seal (B) to stem (A).
3. Stem (A) into body (C). Turn to lock in place.

- Add proper coolant as specified in MAINTENANCE AND LUBRICATION (SEC. 0B).
- Start engine and check for leaks.

Brass Drain Cock

Remove or Disconnect (Figure 37)

- Drain radiator of coolant.
- Drain cock from threaded hole in radiator side tank.

Install or Connect (Figure 37)

- Drain cock into threaded hole in radiator side tank.

Tighten

- Drain cock to 18 N•m (13 ft. lbs.).

- Add proper coolant as specified in MAINTENANCE AND LUBRICATION (SEC. 0B).
- Start engine and check for leaks.

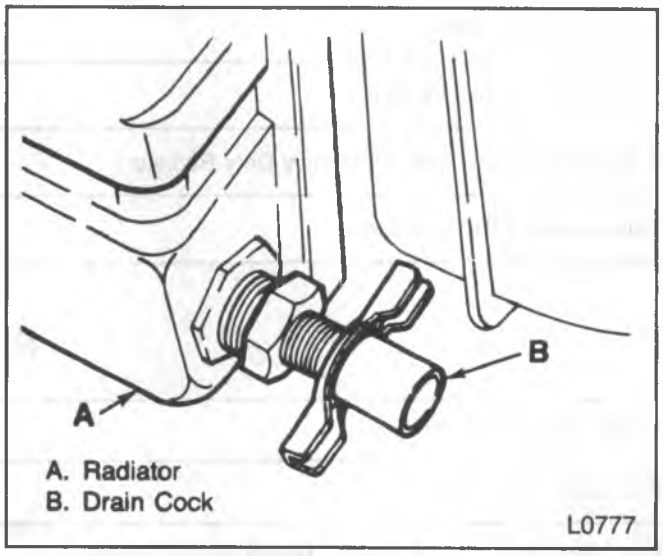

Figure 37—Brass Radiator Drain Cock

SPECIFICATIONS

FASTENER TORQUE

R/V

	5.7L	6.2L	7.4L
Fan Shroud to the Radiator	6 N•m (53 in. lbs.)	6 N•m (53 in. lbs.)	6 N•m (53 in. lbs.)
Upper Fan Shroud to the Lower Fan Shroud			6 N•m (53 in. lbs.)
Upper Mounting Panel			17 N•m (13 ft. lbs.)
Upper Mounting Brackets	17 N•m (13 ft. lbs.)	17 N•m (13 ft. lbs.)	
Transmission Oil Cooler Lines		27 N•m (20 ft. lbs.)	
Engine Oil Cooler Lines		24 N•m (18 ft. lbs.)	24 N•m (18 ft. lbs.)

P(32)

	6.2L	7.4L
Lower Mounting Panel	20 N•m (15 ft. lbs.)	20 N•m (15 ft. lbs.)
Lower Mounting Panel	17 N•m (13 ft. lbs.)	17 N•m (13 ft. lbs.)
Upper Mounting Brace	17 N•m (13 ft. lbs.)	17 N•m (13 ft. lbs.)
Fan Shroud to the Radiator	10 N•m (89 in. lbs.)	10 N•m (89 in. lbs.)
Fan Shroud to the Radiator (Heavy Duty Radiator)	17 N•m (13 ft. lbs.)	17 N•m (13 ft. lbs.)
Transmission Oil Cooler Lines	27 N•m (20 ft. lbs.)	27 N•m (20 ft. lbs.)

GMTB-3002-2A

P(42)

	4.3L	5.7L	6.2L	7.4L
Lower Mounting Panel			17 N·m (13 ft. lbs.)	17 N·m (13 ft. lbs.)
Fan Shroud to the Radiator	5.6 N·m (50 in. lbs.)	6 N·m (53 in. lbs.)	9.5 N·m (84 in. lbs.)	9.5 N·m (84 in. lbs.)
Ran Shroud to the Radiator (Heavy Duty Radiator)		17 N·m (13 ft. lbs.)		17 N·m (13 ft. lbs.)
Transmission Oil Cooler Lines	27 N·m (20 ft. lbs.)	27 N·m (20 ft. lbs.)	27 N·m (20 ft. lbs.)	27 N·m (20 ft. lbs.)

T2231

SPECIAL TOOLS

1. J 23699

2. J 24460-100

3. 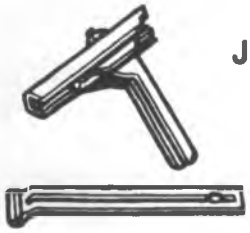 J 33419-A

4. J 24460-01

1. Overflow Tube Pressure Test Adapter
2. Quick Fill Adapter Cap
3. Radiator Core Remover/Installer
4. Cooling System Tester

L0749

SECTION 6C

FUEL SYSTEM

***NOTICE:** When fasteners are removed, always reinstall them at the same location from which they were removed. If a fastener needs to be replaced, use the correct part number for that application. If the correct part number fastener is not available, a fastener of equal size and strength (or stronger) may be used. Fasteners that are not reused and those requiring thread locking compound will be called out. The correct torque value must be used when installing fasteners that require it. If the above conditions are not followed, parts or system damage could result.*

CONTENTS

SUBJECT	PAGE
Description	6C- 2
Diagnosis of "WATER IN FUEL" Light (Diesel Engine Only)	6C- 2
Air Cleaner	6C- 2
Air Filter Element Replacement	6C- 2
Diesel Engine Fuel Filters	6C- 3
Draining the Fuel Filter	6C- 3
Diesel Fuel Filter Replacement	6C- 4
Fuel Filter Adapter Replacement	6C- 5
Fuel Filter Assembly Component Replacement	6C- 5
Fuel Filter Plug Replacement	6C- 5
Fuel Pump	6C- 6
Fuel Pump Tests (TBI Engine)	6C- 6
Fuel Pump Tests (Diesel Engine)	6C- 6
Fuel Pump Replacement	6C- 7
Fuel Tank	6C- 7
Draining the Fuel Tank	6C- 7
Fuel System Cleaning (TBI Engine)	6C- 8
Fuel System Cleaning (Diesel Engine)	6C- 8
Fuel Tank Purging	6C- 9
Fuel Tank Leak Test	6C-10
Fuel Tank Replacement	6C-10
Fuel Tank Filler Neck	6C-11
Fuel Lines	6C-11
Fuel Gage Sending Unit	6C-12
Fuel Gage Sending Unit Replacement	6C-12
Fuel Tank Selector Valve	6C-13
Diagnosis of Selector Valve	6C-13
Fuel Tank Selector Valve Replacement	6C-15
Accelerator Controls	6C-16
Accelerator Control Cable	6C-16
Accelerator Pedal	6C-16
Specifications	6C-18
Special Tools	6C-18

DESCRIPTION

All new GM vehicles are certified by the United States Environmental Protection Agency to be in conformance with air pollution control requirements. This certification is contingent on certain adjustments being set to factory standards. In most cases, these adjustment points either have been permanently sealed and/or made inaccessible to prevent indiscriminate or routine adjustment in the field. For this reason, the factory service procedures for temporarily removing plugs, cap, etc., must be strictly followed. Wherever practicable, the serviced components must be returned to the original intent of the design. For vehicles sold in Canada and equipped with non-closed loop engines, also refer to the appropriate Canadian service manual supplement.

This section covers information for some gas, mostly diesel engines. For information on vehicles with Throttle Body Injection (TBI), refer to the Fuel and Emissions Service Manual if you are using X-9132. Refer to the rear of this manual if you are using ST-330-91.

DIAGNOSIS OF "WATER IN FUEL" LIGHT (DIESEL ENGINE ONLY)

PROBLEM	POSSIBLE CAUSE	CORRECTION
Light Stays on or Intermittent Light	• Water in fuel filter.	• Drain water from the fuel filter.
Light Stays On With Engine Running (Temperature Below Freezing)	• Fuel filter is clogged with ice.	• Drain the fuel filter. If no water is drained, open the air bleed and check for fuel pressure. Replace the filter element if there is no pressure.
Light Stays On Continuously And Engine Stalls And Will Not Restart (After Refueling).	• Large amounts of water pumped into the tank.	• Purge the fuel tank.

D0014

AIR CLEANER

CAUTION: The air cleaner also functions as a flame arrester in the event of engine backfire. The air cleaner should be in place at all times unless its removal is necessary for repair or maintenance. To help reduce the risk of personal injury and property damage, be sure that no one is near the engine compartment before starting the engine with the air cleaner removed. If engine backfire occurs with the air cleaner removed, there could be a burst of flame, and possibly other fire in the engine compartment. On vehicles with diesel engines, do not use starting fluids—immediate engine damage can result. Also take care not to let objects fall into the engine if the air cleaner is removed. If the engine is running, suction can pull loose objects into the engine. Objects pulled or dropped into the engine can cause costly engine damage.

When replacement of the air cleaner filter element is necessary, an AC filter element is recommended.

Refer to MAINTENANCE AND LUBRICATION (SEC. 0B) for change intervals. Operation of the vehicle in dusty areas will necessitate more frequent replacement.

AIR FILTER ELEMENT REPLACEMENT

NOTICE: Extreme care should be taken when removing the filter element. Remove the filter element slowly to prevent dirt from falling into the engine and causing possible engine damage.

Remove or Disconnect (Figure 1)

1. Wing nuts.
2. Air cleaner cover from the base.
3. Air filter element.
4. All accumulated dirt from the base.

Inspect

- Filter element for damage or excessive dirt accumulation. Replace as necessary.
- Seals or gaskets for damage.

Install or Connect (Figure 1)

1. Air filter element.
2. Air cleaner cover.
3. Wing nuts.

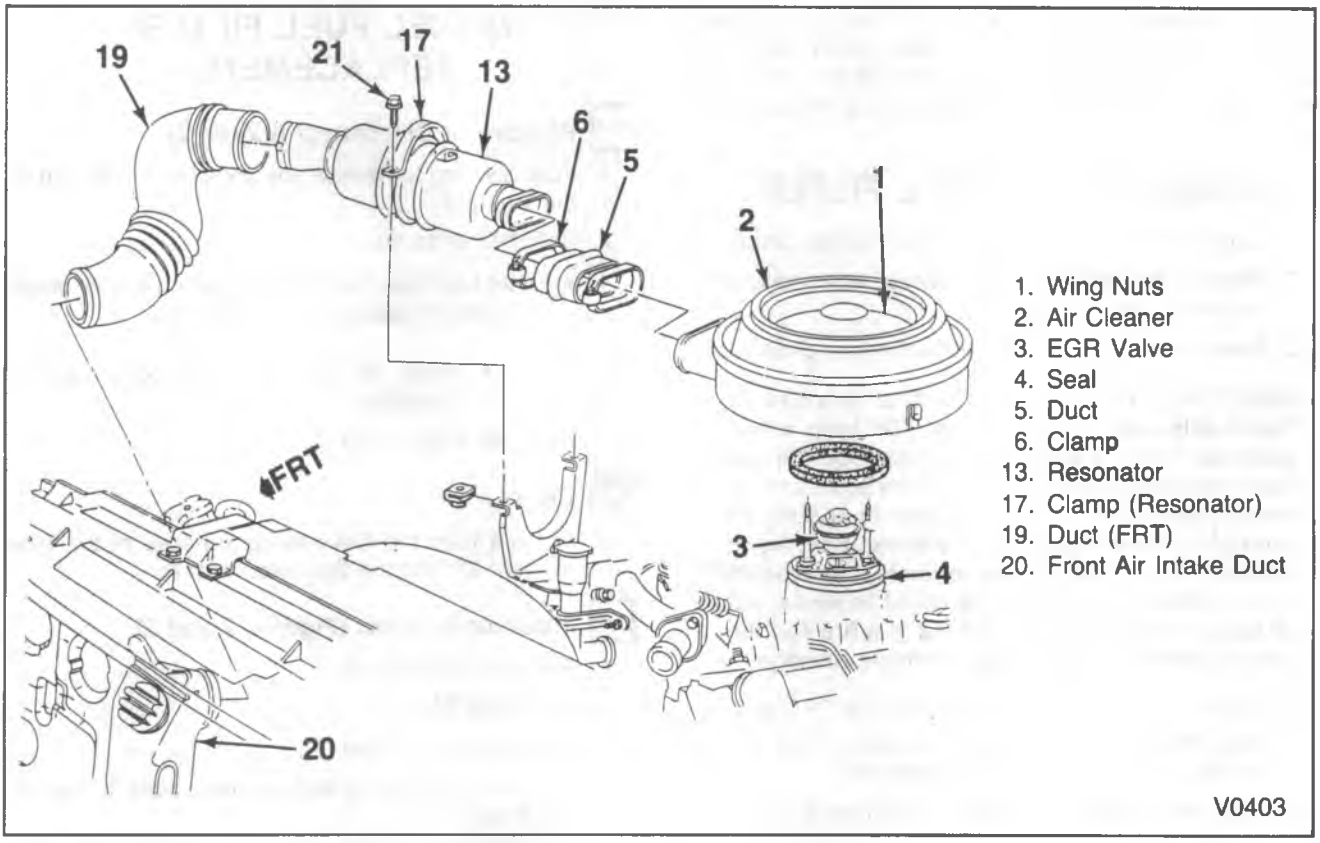

Figure 1—Air Cleaner Components

AIR FILTER ASSEMBLY. RESONATOR AND DUCTS REPLACEMENT

Remove or Disconnect (Figure 1)

1. Wing nuts (1).
2. Loosen clamps (6).
3. Duct (5).
4. Air filter assembly (2).
   - EGR valve hose (if equipped).
5. Seal (4).
6. Resonator clamp bolt (21).
7. Duct (19).
8. Resonator (13).

Install or Connect (Figure 1)

1. Seal (4).
2. Air filter assembly (2).
   - EGR valve hose (if equipped).
3. Wing nuts (1).
4. Duct (19) onto front air intale duct (20).

NOTICE: See "Notice" on page 6C-1 of this section.

5. Resonator (13) and clamp (17) with bolt (21).

   Tighten
   - Bolt (21) to 25 N•m (18 ft. lbs.)
6. Duct (19) onto resonator.

DIESEL ENGINE FUEL FILTERS

The diesel engine fuel filter is an inline type filter which combines several different functions. It acts as a filter, water separator, water detector, water drain, and a fuel heater (figures 2 and 3).

The first stage of the filter element is a water coalescor. The coalescor element combines small droplets of water into large drops. The water collects in the bottom of the filter element for draining. The fuel then passes through the second stage of the filter element which is a paper filter.

The filter acts as a water detector by turning on the "WATER IN FUEL" light on the instrument panel. When 65 ml (2.2 fluid ounces) of water has collected in the filter, the probe of the water detector will contact water. This completes a circuit through the water to the cover assembly which turns on the "WATER IN FUEL" light.

NOTICE: If the "WATER IN FUEL" light comes on and the fuel system is not purged of water, fuel injection system damage may result.

When the light comes on, the filter should be drained as soon as practical, but within one to two hours of engine operation.

A water drain is located in the bottom of the fuel filter assembly. By opening the water drain valve, water that has collected in the bottom of the filter element can be drained.

A fuel heater is located in the fuel filter assembly to help prevent fuel waxing. The heater thermostat turns the heater on at about 8°C (46°F) and off at about 25°C (77°F). The heater uses 7 to 13 amps depending on fuel temperature.

DRAINING THE FUEL FILTER

1. Turn off the engine and apply the parking brake.
2. Remove the fuel filter cap to release any pressure or vacuum in the fuel tank.
3. Place a suitable container under the filter drain hose.

CAUTION: The water/diesel fuel mixture is flammable, and could be hot. To help avoid personal injury and/or property damage, do not touch the fuel coming from the drain hose, and do not expose the fuel to open flames or sparks. Be sure you do not overfill the container. Heat (such as from the engine) can cause the fuel to expand. If the container is too full, fuel could be forced out of the container. This could lead to a fire and the risk of personal injury and/or vehicle damage.

4. Open the drain valve (7) two to three turns (figure 2).
5. Start the engine and allow it to idle for one to two minutes or until clear fuel is observed.
6. Stop the engine and close the drain valve (7).
7. Install the fuel filler cap.
8. Dispose of the drained mixture in a proper manner.

DIESEL FUEL FILTER REPLACEMENT

Remove or Disconnect (Figure 2)

1. Fuel filler cap to release any pressure or vacuum in the fuel tank.
2. Both bail wires (8).
   - Drain fuel from the filter by opening the air bleed (10) and the water drain valve (7).
   - Allow the fuel to drain into a suitable container.
3. Fuel filter element (9).

Clean

- Any dirt from the fuel sealing surfaces of the filler element (9) and the filler adapter (11).

Install or Connect (Figures 2 and 3)

1. New filter element (9).
2. Bail wires (8).
- Close the drain valve (7).
3. A 3 mm (1/8-inch) inside diameter hose to the air bleed port (12).
4. The other end of the hose into a suitable container.
- Disconnect the fuel injection pump shutdown solenoid.

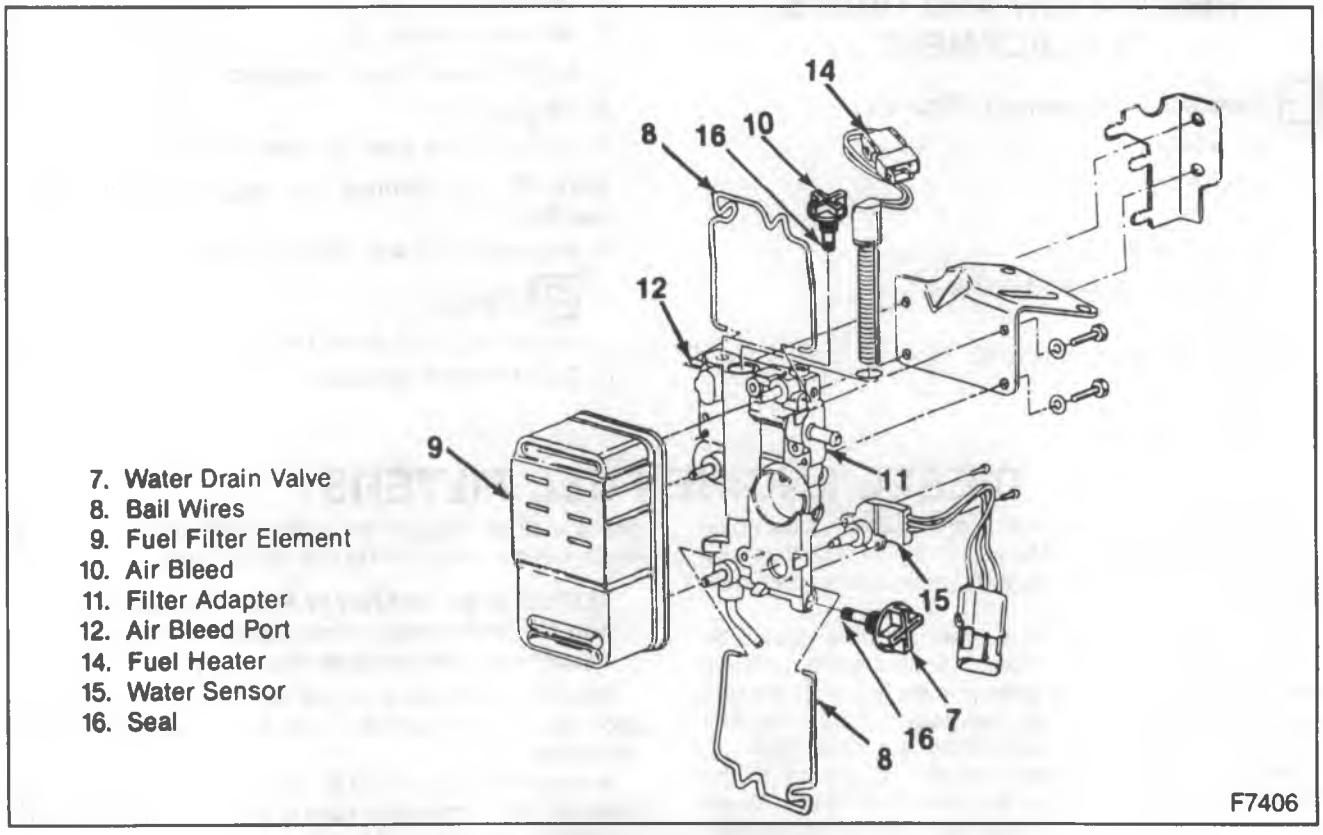

Figure 2—Diesel Fuel Filter

NOTICE: If the engine is to be cranked or started with the air cleaner removed, take care not to let objects fall into the engine. If the engine is running, suction could pull any loose objects into the engine. Objects pulled or dropped into the engine may cause costly engine damage.

- Crank the engine for 10 to 15 seconds and then wait one minute for the starter motor to cool. Repeat until clear fuel is observed coming from the air bleed.
- Close the air bleed.

5. Injection pump shutdown solenoid.
6. Fuel filler cap.

- Start the engine and allow it to idle for five minutes.
- Check the fuel filter for leaks.

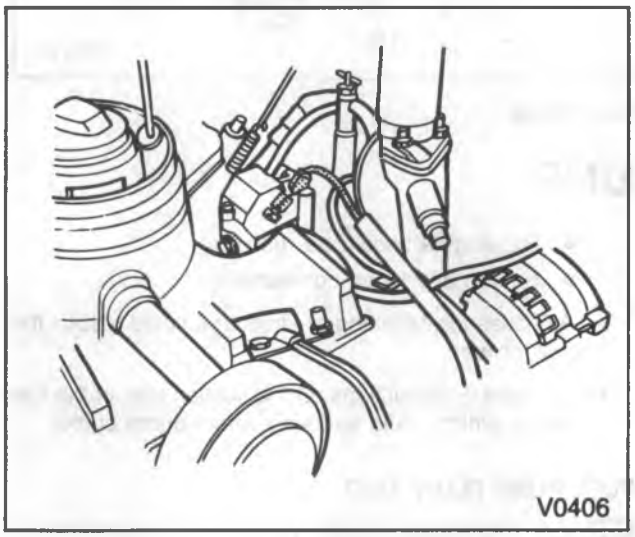

Figure 3—Shutdown Solenoid Connector

FUEL FILTER ADAPTER REPLACEMENT

Remove or Disconnect (Figure 2)

1. Fuel filter as explained previously in the section.
2. Fuel lines at adapter.
   - Allow the fuel in the lines to drain into a suitable container.
3. Connectors to water sensor and fuel heater.
4. Six (6) mounting bracket fasteners and mounting bracket.
5. Water sensor retaining screws and water sensor.
6. Air bleed screw.
7. Fuel heater.
8. Fuel filter adapter.

Install or Connect (Figure 2)

1. Fuel heater.
2. Air bleed screw.
3. Water sensor and retaining screws.
4. Mounting bracket and six (6) fasteners.
5. Connectors to water sensor, restriction switch and fuel heater.
6. Fuel lines.
7. Fuel filter as explained previously in this section.

FUEL FILTER ASSEMBLY COMPONENT REPLACEMENT

All component parts of the fuel filter assembly are serviceable. These components include the filter adapter, fuel heater, and the water sensor (figure 4).

Always replace any damaged or worn O-rings, gaskets, or seals. After replacing components, bleed air from the filter to save cranking time. Start the engine and check for leaks after replacing components.

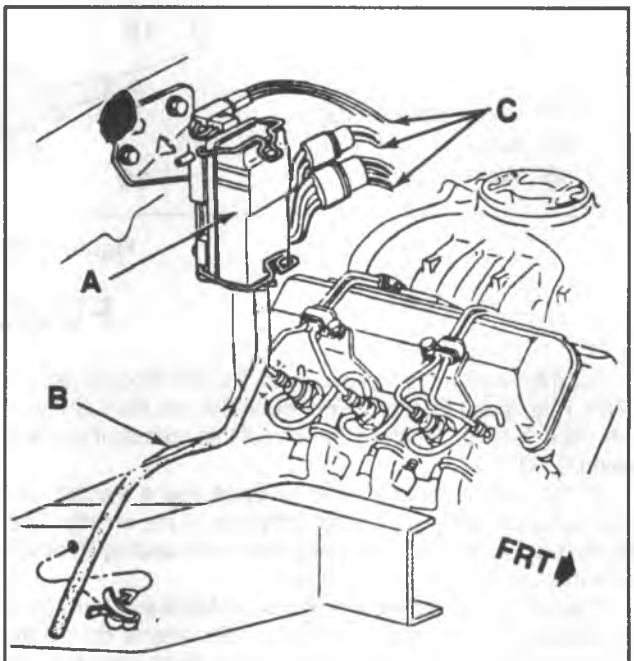

Figure 4—Fuel Filter—R/V Models

FUEL FILTER PLUG REPLACEMENT

Two styles of filter plugs may be used in service. The older style has a conical end and uses a separate seal at the base of the plug bore. The newer style plug has a flat end, and a rubber-like seal attached to the end of the plug. The newer plug is in the type used in production vehicles.

If the flat-end plug is replaced with the conical-end plug, it is necessary to pressure the boss of the threaded plug hole (figure 5). If the boss is 1/8-inch from the base of the filter, add plain washer no. 561890 to the plug. If the boss is 1/4-inch from the base of the filter, then the plug may be used without modification.

When using the conical-end plug, install the new seal using a short length of 1/4-inch diameter bar stock or equivalent with square ends. Apply a small amount of Synkut lubricant (or equivalent) to the rod end. Insert the seal into the air vent (or water drain) plug bore until it seats firmly in the bottom of the bore. Inspect the bore to ensure that the seal is bottomed squarely.

Install the plug (properly modified if necessary).

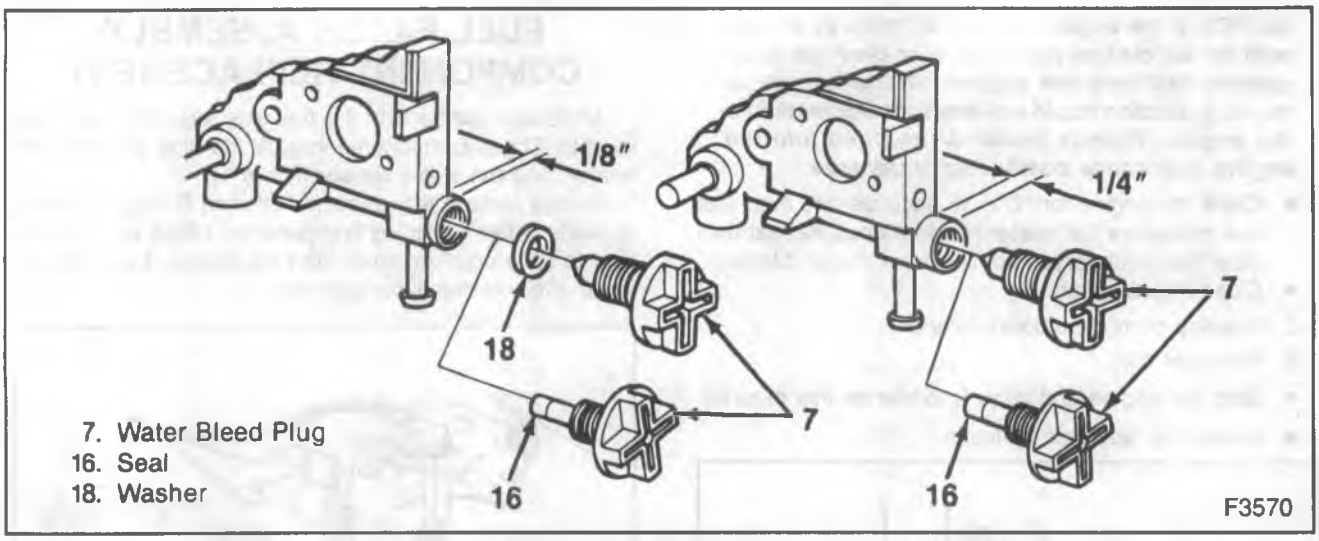

Figure 5—Fuel Filter Plugs

FUEL PUMP

For information on vehicles with Throttle Body Injection (TBI), refer to the Fuel and Emissions Service Manual if you are using X-9132. Refer to the rear of this manual if you are using ST-330-91.

All R/V and P model diesel engines use a mechanical fuel pump located on the front right side of the engine. The pump is a diaphragm type pump and is actuated by a rocker arm through a link and pull rod.

The fuel pump rocker arm is moved back and forth by a rod which rides on an eccentric on the engine camshaft. The rocker arm pulls down on the pump diaphragm against spring pressure. This causes a vacuum in the pump chamber which draws fuel from the tank through the inlet valve. The camshaft rotates and releases pressure on the arm. This allows the spring to act on the diaphragm and force fuel out of the pump chamber through the outlet valve and into the fuel line diesel fuel injection pump.

When the immediate fuel needs of the diesel engine are satisfied, pressure builds in the fuel line and pump chamber. This pressure forces the diaphragm/piston to make shorter and shorter strokes, until more fuel is needed in the engine.

FUEL PUMP TESTS (TBI ENGINE)

For information on vehicles with Throttle Body Injection (TBI), refer to the Fuel and Emissions Service Manual if you are using X-9132. Refer to the rear of this manual if you are using ST-330-91.

FUEL PUMP TESTS (DIESEL ENGINE)

If the fuel system is suspected of delivering insufficient fuel, it should be inspected as follows:

Inspect

- Make certain that there is fuel in the tank.
- For leaks at all fuel connections from the fuel tank to the injection pump.
  - The engine should be running.
  - Tighten any loose connections.
- All hoses for flattening or kinks that could restrict the flow of fuel.
- Air leaks or restrictions on the suction side of the fuel pump, which could seriously affect pump output.

FUEL PUMP FLOW TEST

Remove or Disconnect

1. Fuel line at the fuel filter inlet.
2. Fuel injection pump electric shutdown solenoid wire (pink wire).
   - Place a suitable container at the end of the fuel filter inlet line.
   - Crank the engine for 15 seconds.
   - The fuel pump should supply 237 ml (1/2-pint) or more in 15 seconds.

FUEL PUMP PRESSURE TEST

Remove or Disconnect

1. The fuel line at the inlet to the fuel filter assembly.
   - Install a low pressure gage to the line.
   - Crank or run the engine for 10 to 15 seconds.
   - Fuel pressure should be 38 to 45 kPa (5.5 to 6.5 psi).
   - If the system fails to pass the above tests:

Inspect

- Fuel lines between fuel filter and tank for restrictions.
- Fuel tank sending unit for restrictions.

If "OK" replace fuel pump.

FUEL PUMP VACUUM TEST

Remove or Disconnect

1. The inlet line at the fuel pump.
   - Plug the hose or position it so fuel does not leak.
   - Connect a vacuum gage to the fuel pump inlet.
   - Crank or run the engine, vacuum should be 41 kPa (12 inches Hg) or greater.
   - Replace the pump if vacuum is less than 41 kPa (12 inches Hg).

FUEL PUMP REPLACEMENT

For information on vehicles with Throttle Body Injection (TBI), refer to the Fuel and Emissions Service Manual if you are using X-9132. Refer to the rear of this manual if you are using ST-330-91.

NOTICE: For steps 4 and 7, see "Notice" on page 6C-1 of this section.

Remove or Disconnect (Figure 6)

1. Fuel pipes and hoses from the fuel pump (25).
2. Bolts (26).
3. Fuel pump (25).
4. Gasket (27).
5. Bolts (28).
6. Mounting plate (29).
7. Gasket (30).
8. The push rod (31) (if necessary).

Install or Connect (Figure 6)

1. The push rod (if removed).
   - Apply chassis grease to the push rod to hold it up against the camshaft.
2. New gasket (30).
3. Mounting plate (29).
4. Bolts (28).

Tighten

- Bolts to "Specifications" at the end of this section.

5. New gasket (27).
6. Fuel pump (25).
7. Bolts (26).

Tighten

- Bolts to "Specifications" at the end of this section.

8. Fuel pipes and hoses to the fuel pump.
   - If it is difficult to start the outlet fitting, disconnect the line at the carburetor or at the diesel fuel injection pump.

- Start the engine and check for leaks.

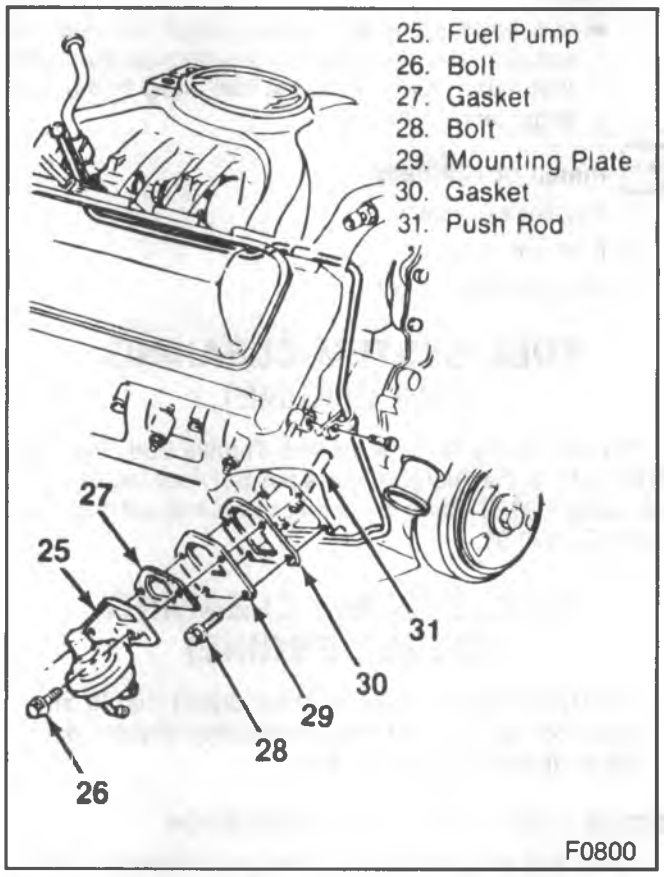

Figure 6—Fuel Pump—6.2L Diesel Engine

FUEL TANK

The fuel tank is located under the rear or sides of the vehicle. The fuel tank is held in place by two metal straps that are attached to the underbody. Anti-squeak strips are used between the tank and the straps to reduce rattles and squeaks.

The fuel tank, filler cap, and fuel lines should be checked for damage which could cause leakage. Replace any damaged or worn parts.

Important

Before servicing the fuel tank or lines.

- Disconnect the negative battery cable from the battery.
- Place "NO SMOKING" signs near work areas.
- Have a CO_2 fire extinguisher nearby.
- Wear safety glasses.
- Siphon or pump fuel into an explosion proof container.

DRAINING THE FUEL TANK

For information on vehicles with Throttle Body Injection (TBI), refer to the Fuel and Emissions Service Manual if you are using X-9132. Refer to the rear of this manual if you are using ST-330-91.

Remove or Disconnect

1. Negative battery cable.
   - There are two batteries in diesel engine vehicles.
   - Have a dry chemical (Class B) fire extinguisher in the work area.
2. Fuel filler cap.

CAUTION: Never drain or store gasoline or diesel fuel in an open container due to the possibility of personal injury from fire or explosion.

3. Fuel through the filler tube using a hand operated pump.
   - If a hand operated pump cannot be used to complete the draining, use a siphon at the main (not return) fuel pipe at the fuel pump or the fuel gage sending unit.

Install or Connect

1. Any lines or hoses.
2. Fuel filler cap.
3. Negative battery cable.

FUEL SYSTEM CLEANING (TBI ENGINE)

For information on vehicles with Throttle Body Injection (TBI), refer to the Fuel and Emissions Service Manual if you are using X-9132. Refer to the rear of this manual if you are using ST-330-91.

FUEL SYSTEM CLEANING (DIESEL ENGINE)

CAUTION: Never drain or store diesel fuel in an open container due to the possibility of personal injury from fire or explosion.

DIESEL FUEL SYSTEM CONTAMINATION

Fungi and other micro-organisms can survive and multiply in diesel fuel if water is present. The fungi can be present in any part of the fuel handling system. These fungi grow into long strings and will form into large globules. The growths appear slimy and are usually black, green, or brown. The fungi may grow anywhere in the fuel but are most plentiful where diesel fuel and water meet. As the fuel is agitated (when service station tanks are being filled), fungi are distributed through the tank and may be pumped into a vehicle.

Fungi use the fuel as their main energy supply and need only trace amounts of water and minerals. As they grow and multiply, they change fuel into water, sludge, acids, and products of metabolism. The most common symptom is fuel filter plugging: however, various metal components (fuel tanks, lines, and injection pump) can corrode.

CAUTION: To avoid personal injury, do not come into physical contact with biocides.

If fungi have caused fuel system problems, use a diesel fuel biocide to sterilize the fuel system. Do not exceed the dosage recommended on the label. Discontinue the use of a biocide when towing a trailer. It is permissible to have biocide in the fuel when starting to tow, but do not add any biocide while towing.

Steam cleaning may be necessary if most of the fungus growth cannot be removed with biocides.

WATER IN THE FUEL SYSTEM

Remove or Disconnect

1. Battery cables.
2. Fuel from the tank. Refer to "Draining the Fuel Tank" in this section.
3. Fuel tank. Refer to "Fuel Tank Replacement" in this section.
4. Fuel gage sending unit. Refer to "Fuel Gage Sending Unit Replacement" in this section.

Clean

- Fuel tank.
  - The tank should be replaced if it is rusted internally.
- The pick-up filter, replace if necessary.
- The check valve assembly.

5. Main fuel hose at the fuel pump.
6. Fuel return line at the injection pump.

- Using low air pressure, force air through the lines and toward the rear of the vehicle.
  - Replace the pipes if they are rusted internally.

7. Fuel injection pump shut-off solenoid wire.
8. Fuel filter.

Install or Connect

1. Fuel gage sending unit. Refer to "Fuel Gage Sending Unit Replacement" in this section.
2. Fuel tank. Refer to "Fuel Tank Replacement" in this section.
3. Fuel lines to the tank.
4. Clean diesel fuel into the tank until it is 1/4 full.
5. Fuel tank cap.
6. Fuel hoses to the fuel pump.
7. Battery cables.

- Crank the engine for 15 seconds at a time, with one minute cooling periods, until clean fuel is pumped out.
  - Use a suitable container to catch the fuel.

8. New fuel filter. Refer to "Diesel Fuel Filter Replacement" in this section.

9. A hose from the return line at the fuel injection pump to a closed metal container with a capacity of at least 8L (2-gallons).
   - If the engine temperature is above 52°C (125°F), activate the HPCA (Housing Pressure Cold Advance) on the injection pump. This can be done by disconnecting the two lead connectors at the Engine Temperature Switch and bridging the connector with a jumper wire.
   - Crank the engine for 15 seconds at a time, with one minute cooling periods, until clean fuel appears at the return line.
10. Two lead connectors to the Engine Temperature Switch.
    - Remove the jumper wire.
    - Disconnect the lead to the HPCA solenoid (on the injection pump).
    - Crack open each injection line at the nozzle. Use two wrenches to prevent nozzle damage.
    - Crank the engine for 15 seconds at a time, with one minute cooling periods, until clean fuel appears from each nozzle.
11. HPCA lead to the injection pump.

NOTICE: See "Notice" on page 6C-1 of this section.

Tighten

- Injection line to nozzle fitting to 25 N•m (20 ft. lbs.).
  - Use two wrenches to prevent nozzle damage,

12. Fuel injection pump shut-off solenoid wire.
    - Start the engine and allow it to idle for 15 minutes.
      - Make sure the fuel return line is in the metal container and that the container does not overflow.
    - Remove the hose from the metal container.
13. Fuel return line to the injection pump.
    - Check for leaks.

GASOLINE IN THE FUEL SYSTEM

Engine Will Run or Start

1. Drain the fuel tank. Refer to "Draining the Fuel Tank" in this section.
2. Fill the tank with diesel fuel.
3. Run the engine for 15 minutes.

Engine Will Not Run

1. Drain the fuel tank. Refer to "Draining the Fuel Tank" in this section.
2. Fill the tank with diesel fuel.
3. Remove the fuel injection pump shutdown solenoid wire. Refer to figure 3.
4. Remove the fuel line between the fuel filter and the injection pump.
5. Connect a hose to the fuel filter outlet and run it to a closed metal container.
6. Crank the engine for 15 seconds at a time, with one minute cooling periods, to purge gasoline from the system.
7. Install the fuel line between the fuel filter and the injection pump.
8. If the engine temperature is above 52°C (125°F), activate the HPCA (Housing Pressure Cold Advance) on the injection pump. This can be done by disconnecting the two lead connectors at the Engine Temperature Switch and bridging the connector with a jumper wire. Refer to figure 7.
9. Install the fuel injection pump shut-off solenoid wire.
10. Start the engine and remove the jumper wire.
11. Connect the two lead connector.
12. Run the engine for 15 minutes.

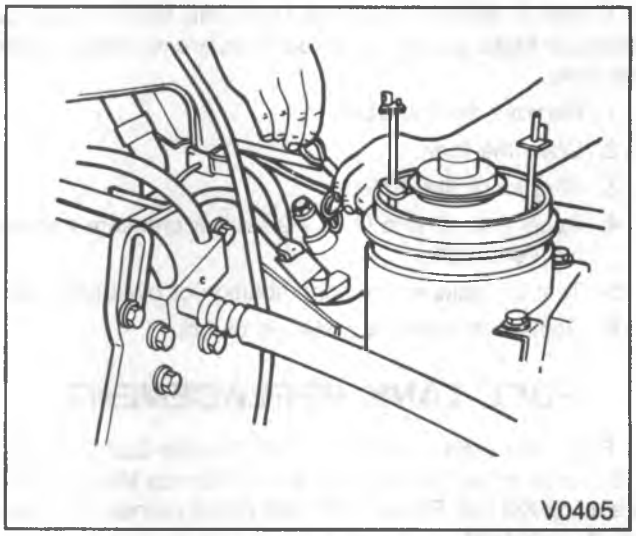

Figure 7—Jumping HPCA Connector

FUEL TANK PURGING

The fuel tank should be purged before being repaired.

Remove or Disconnect

1. Fuel tank from the vehicle. Refer to "Fuel Tank Replacement" in this section.
2. Fuel gage sending unit. Refer to "Fuel Gage Sending Unit" in this section.
3. All remaining fuel from the tank.

Inspect

- Fuel tank for any remaining fuel.

Install or Connect

1. Tap water into the tank until it is full.
   - Move the tank to the flushing area (wash rack).
   - Agitate the water vigorously and then drain it.
2. Gasoline emulsifying agent into the tank.
   - Use an available emulsifying agent such as Product-Sol No. 913 or equivalent.

3. Water into the fuel tank.
   - Refer to the emulsifying agent specifications for the mixture ratio.
- Agitate the mixture for ten minutes.
- Drain the tank completely.
- Fill the tank with water until it overflows.
- Completely flush out any remaining mixture.
- Drain the fuel tank.
- Use an explosion meter (if available) to check for a negative reading.
- Perform the required service work.

FUEL TANK LEAK TEST

If fuel is leaking from the tank, the tank should be replaced. Make sure that the fuel lines are not leaking onto the tank.

1. Remove the fuel tank.
2. Drain the tank.
3. Plug all of the outlets.
4. Apply 7 to 10 kPa (1 to 1/2 psi) air pressure through the vent tube.
5. Test for leaks with a soap solution or by submersion.
6. Replace the tank if a leak is found.

FUEL TANK REPLACEMENT

For information on vehicles with Throttle Body Injection (TBI), refer to the Fuel and Emissions Service Manual if you are using X-9132. Refer to the rear of this manual if you are using ST-330-91.

CAUTION: To help avoid personal injury when a vehicle is on the hoist, provide additional support for the vehicle at the opposite end from which components are being removed. This will reduce the possibility of the vehicle falling off.

Remove or Disconnect (Figures 8 through 13)

1. Fuel from the tank.
2. Fuel tank retaining straps.
   - Support the fuel tank.
3. Sending unit wire, hoses, and ground straps.
- Lower the tank.
4. Fuel tank from the vehicle.

Install or Connect (Figures 8 through 13)

1. Fuel tank into the vehicle.
   - Support the tank.
2. Sending unit wire, hoses, and ground straps.

NOTICE: See "Notice" on page 6C-1 of this section.

3. Fuel tank retaining straps with the anti-squeak strips.
   - Cement the anti-squeak material securely to the tank with 25 mm (1-inch) wide coverage for 10 cm (4-inches) on each end.

Tighten

- Retaining strap bolts or nuts to "Specifications" at the end of this section.

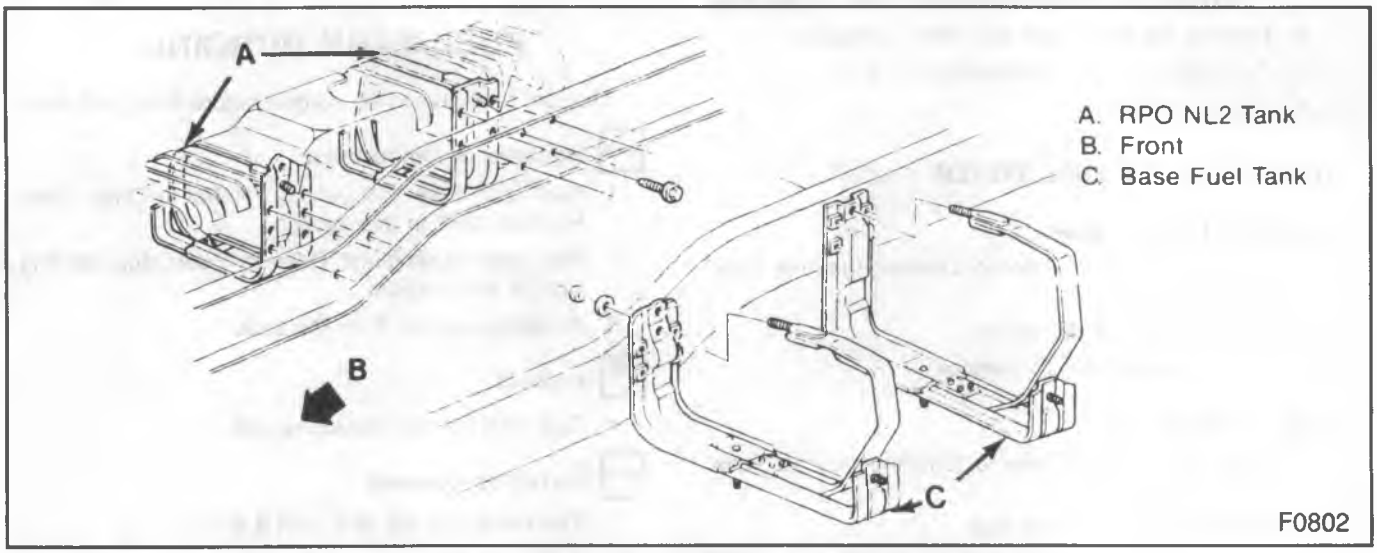

Figure 8—Fuel Tank Mounting—R/V Model

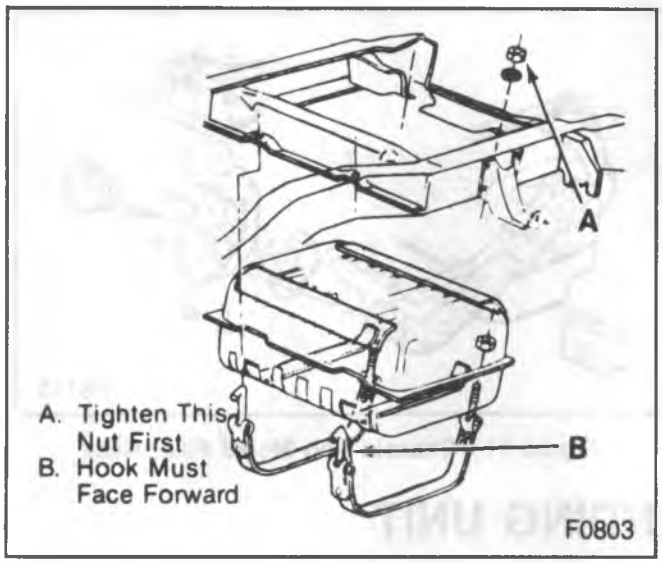

Figure 9—Fuel Tank Mounting—Utility Vehicle and Suburban Models

FUEL TANK FILLER NECK

A restrictor and deflector is built into the fuel filler neck on gasoline engine vehicles to help prevent refueling with leaded gasoline. The opening in the restrictor will only admit the smaller unleaded gas nozzle spout. The nozzle must be fully inserted to bypass the deflector (figures 10 and 11).

FUEL FILLER CAP

The fuel tank filler neck is equipped with a screw type cap. The cap requires several turns counterclockwise to remove. The long threaded area allows fuel tank pressure to escape while the cap is being removed. A torque limiting device prevents overtightening. To install, turn the cap clockwise until a clicking noise is heard.

NOTICE: If a fuel filter cap requires replacement, use only a cap with the same features. Failure to use the correct cap can result in a serious malfunction of the system.

FUEL LINES

NOTICE: Fuel and vapor hoses and pipes are specially manufactured. It is important to use replacement hose or pipe meeting GM specifications. Hoses and pipes not meeting GM Specifications could cause early failure or failure to meet emission standards.

When replacing fuel feed and return pipes, always use welded steel tubing meeting GM Specification 124M or its equivalent. The replacement pipe must have the same type fittings as the original pipes to ensure the integrity of the connection.

- Never replace fuel pipe with copper or aluminum tubing.
- Check and replace any damaged O-rings or washers.
- Fuel pipes should be inspected occasionally for leaks, dents, or kinks.
- Follow the same routing as the original pipe.
- Pipes must be properly secured to the frame to prevent chafing. A minimum clearance of 6 mm (1/4-inch) must be maintained to prevent contact and chafing.

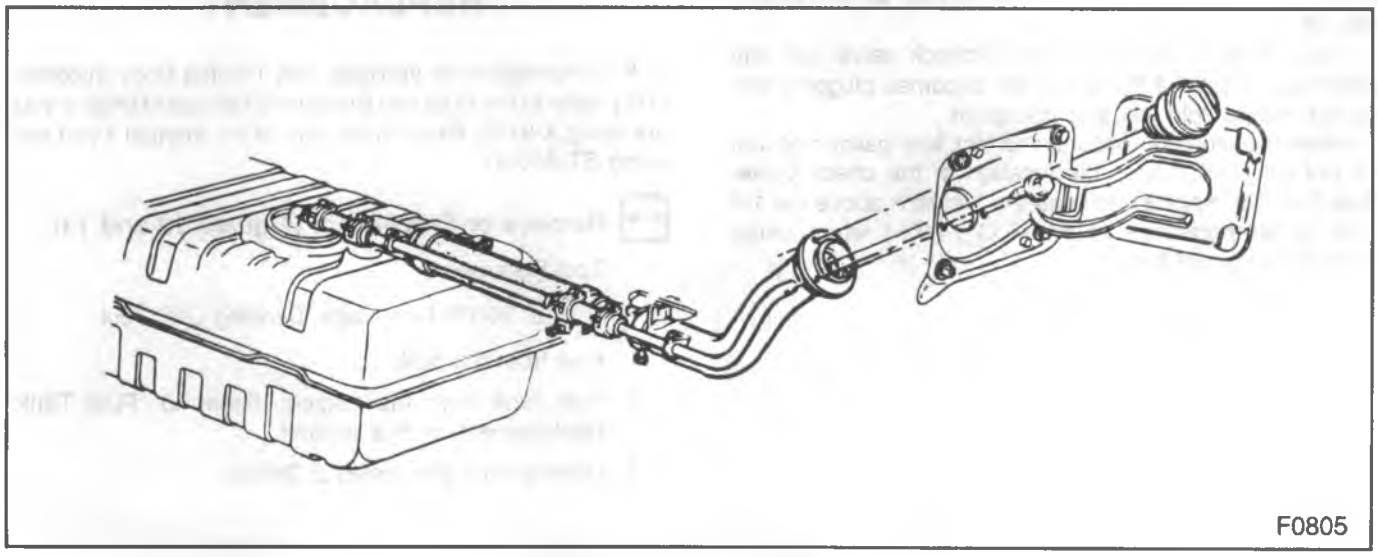

Figure 10—R/V Model Filler Neck

FUEL AND VAPOR HOSES

NOTICE: Fuel and vapor hoses are specially manufactured. It is important to use replacement hoses that meet GM Specification 6163-M. These hoses are identified by the word "Fluoroelastomer" marked on them. Hoses not so marked could cause early failure or failure to meet emission standards.

Do not use rubber hose within 10 cm (4-inches) of any part of the exhaust system or within 25 cm (10-inches) of the catalytic converter.

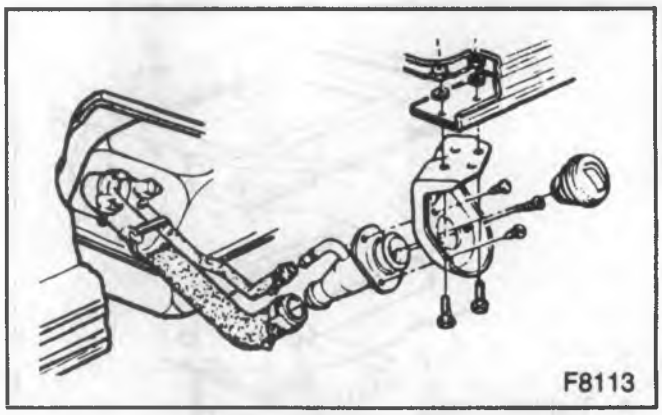

Figure 11—Chassis Cab Model Filler Neck

FUEL GAGE SENDING UNIT

The fuel gage sending unit is mounted in the top of the fuel tank. It is held in place by a cam lock ring. A gasket is used between the tank and the sending unit.

Sending units have either two or three nipples to attach hoses. These hoses are the fuel feed, fuel return, and vapor hoses.

On some sending units a wire is attached to the unit. On other sending units, connectors attach directly to the sender.

IN TANK FUEL FILTER (Figure 12)

A woven plastic filter (53) is located on the lower end of the fuel pickup tube in the fuel tank. This filter prevents dirt and water from entering into the fuel line unless it becomes completely submerged in water. The filter is self cleaning and normally requires no maintenance. Fuel stoppage at this point indicates that the fuel tank contains an abnormal amount of sediment or water and should be thoroughly cleaned.

Diesel engine vehicles have a check valve that will permit fuel to pass if the tank filter becomes plugged with paraffin during cold weather operation.

When the plugging occurs, the last four gallons of fuel will not be used due to the location of the check valve. Therefore it is important to keep the fuel tank above the 1/4 mark at temperatures below -6°C (-20°F) when using number two diesel fuel.

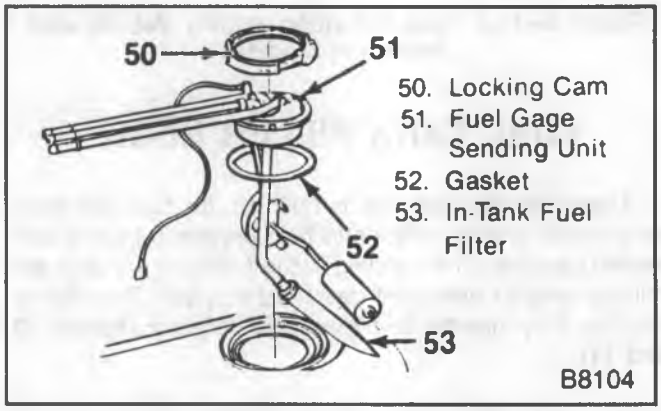

Figure 12—Fuel Gage Sending Unit

FUEL GAGE SENDING UNIT REPLACEMENT

For information on vehicles with Throttle Body Injection (TBI), refer to the Fuel and Emissions Service Manual if you are using X-9132. Refer to the rear of the manual if you are using ST-330-91.

Remove or Disconnect (Figures 12 and 13)

Tool Required:

J 36608 Fuel Gage Sending Unit Tool

1. Fuel from the tank.
2. Fuel tank from the vehicle. Refer to "Fuel Tank Replacement" in this section.
3. Locking cam (50) using J 36608.

4. Fuel gage sending unit (51).
5. Gasket (52).

Install or Connect (Figures 12 and 13)

Tool Required:

J 36608 Fuel Gage Sending Unit Tool

1. New gasket.
2. Fuel gage sending unit.
   - Take care not to fold or twist the strainer or fuel flow will be restricted.
3. Locking cam using J 36608.
4. Fuel tank into the vehicle. Refer to "Fuel Tank Replacement" in this section.

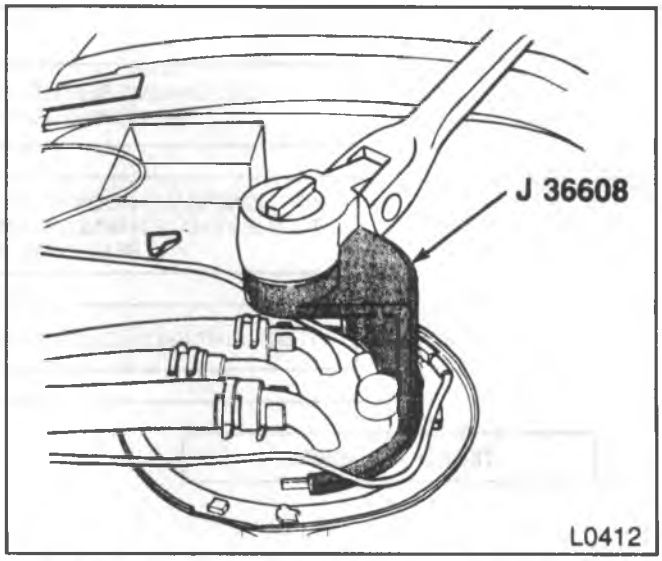

Figure 13—Fuel Gage Sending Unit Replacement

FUEL TANK SELECTOR VALVE

The fuel tank selector valve is operated by a switch on the instrument panel. The switch controls fuel tank switching and fuel gage indicating in a single operation.

A simple check can be made to determine if the fuel tank selector valve is working by listening for selector valve motor operation when the switch is pressed.

DIAGNOSIS OF SELECTOR VALVE

CHECKING THE INSTRUMENT PANEL SIDE OF THE HARNESS

Refer to figures 14 through 17 to diagnose the instrument panel side of the selector valve harness.

CHECKING THE SELECTOR VALVE SIDE OF THE HARNESS

1. Make sure there are about 40 liters (10 gallons) of fuel in one tank and about 20 liters (5 gallons) in the other tank.
2. Place your hand on the selector valve and have an assistant cycle the instrument panel control switch. Removal of the hose shield will aid in access to the selector valve.
3. Listen for the selector valve operation and feel the valve at the same time. Check gage readings as the switch is cycled.
4. If no sound is heard or if nothing is felt at the valve and the gage readings do not change, replace the valve.
5. If the sound and the feel of the valve determines it is working, check the fuel gage and system for function if no problem is found after completing all of the above checks.
6. Refer to "INSTRUMENT PANEL AND GAGES (SEC. 8C) if the fuel gage does not register accurately.

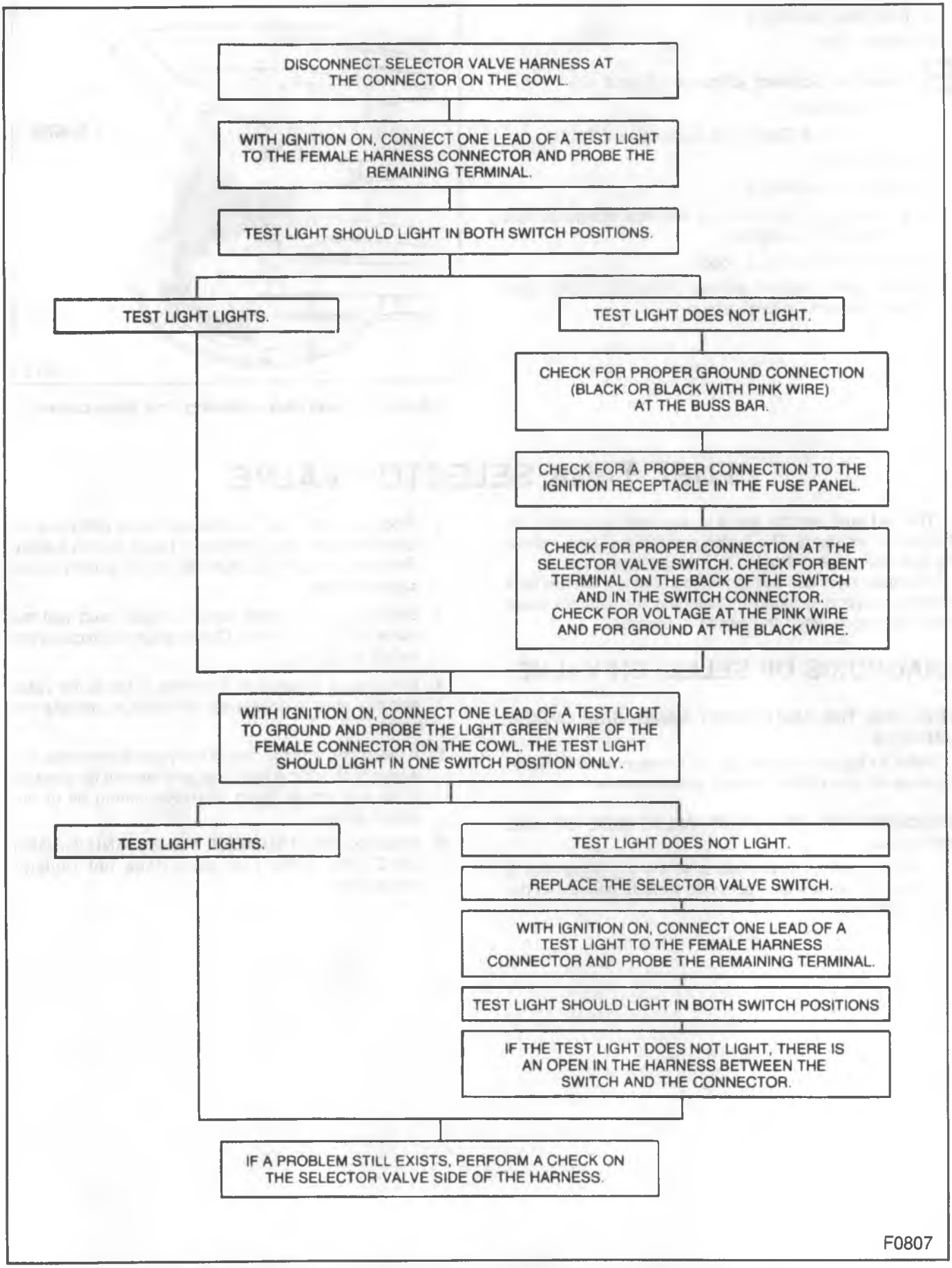

Figure 14—Diagnosis of the Instrument Panel Side of the Selector Valve Harness

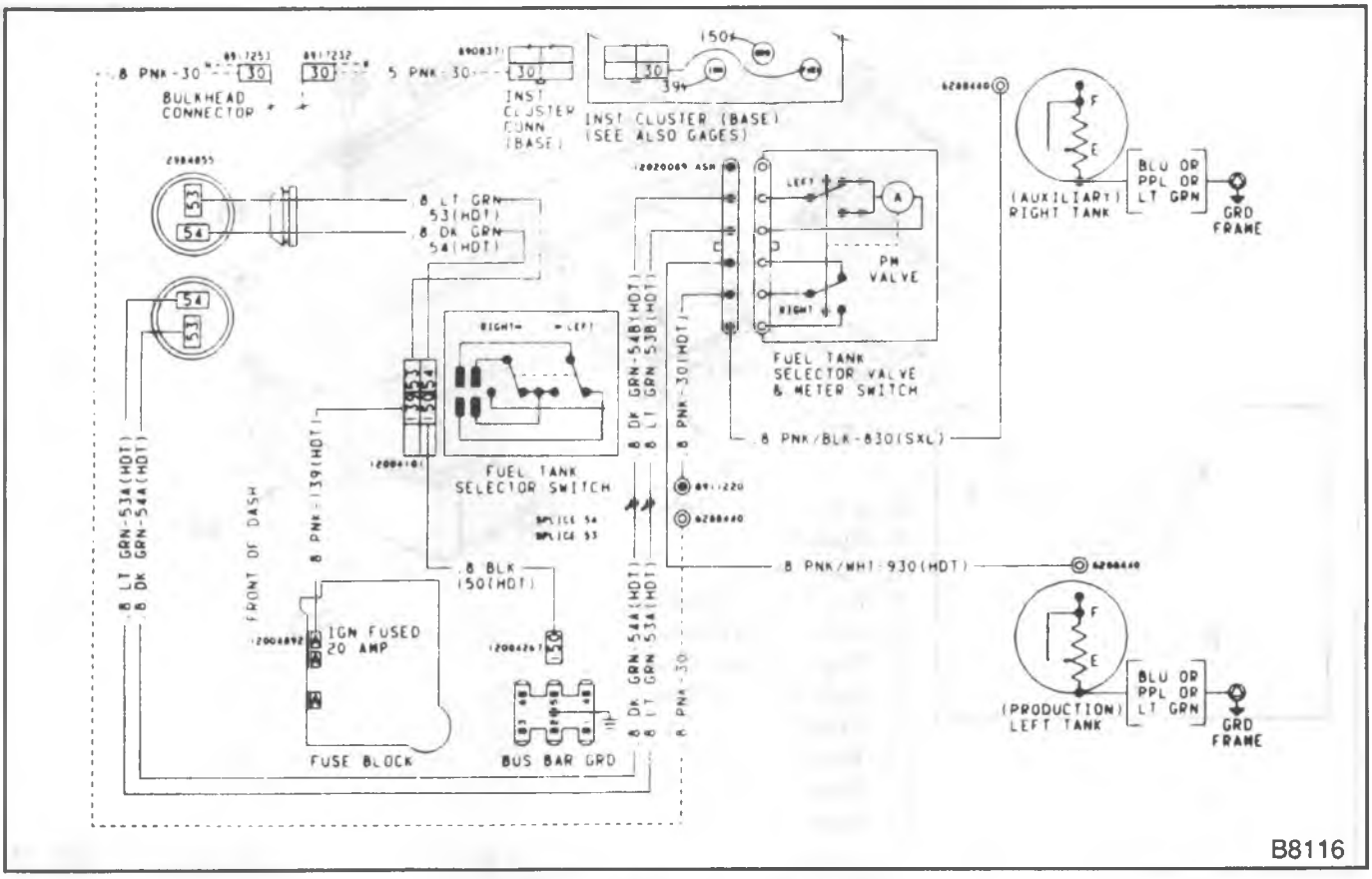

Figure 15—Auxiliary Fuel Tank Wiring

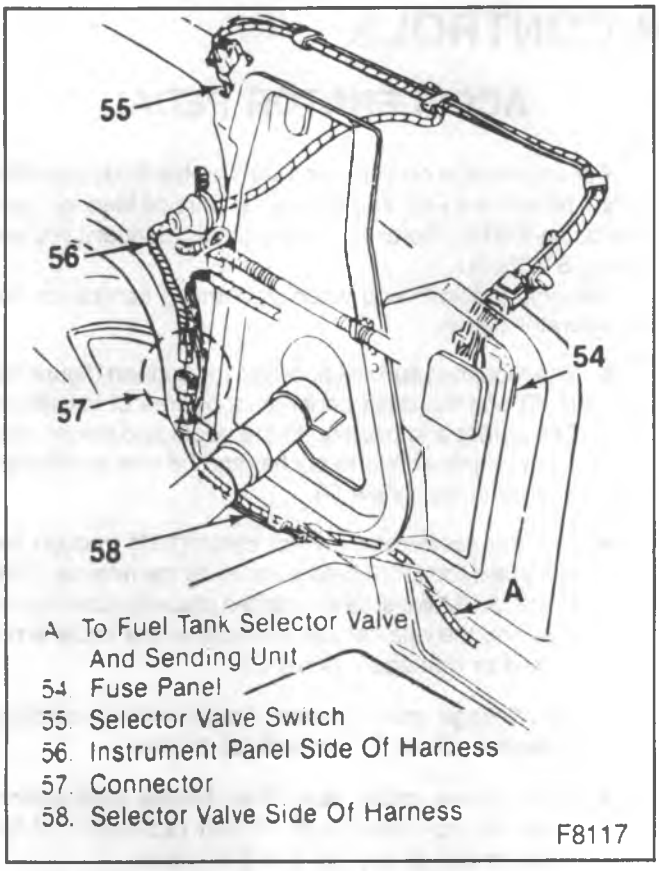

Figure 16—Auxiliary Fuel Tank Instrument Panel Wiring

FUEL TANK SELECTOR VALVE REPLACEMENT

Remove or Disconnect (Figure 17)

1. Battery negative cable.
2. Hose shield (60) and brace (61).
3. Electrical connector from the selector valve (62).
4. Fuel and vapor hoses.
   - Note the position of the hoses for installation.
5. Bolts (63).
6. Valve (62).

Install or Connect (Figure 17)

1. Valve (62).
2. Bolts (63).
3. Fuel and vapor hoses in the correct position.
4. Electrical connector to the selector valve.
5. Brace (61) and hose shield (60).
6. Battery negative cable.

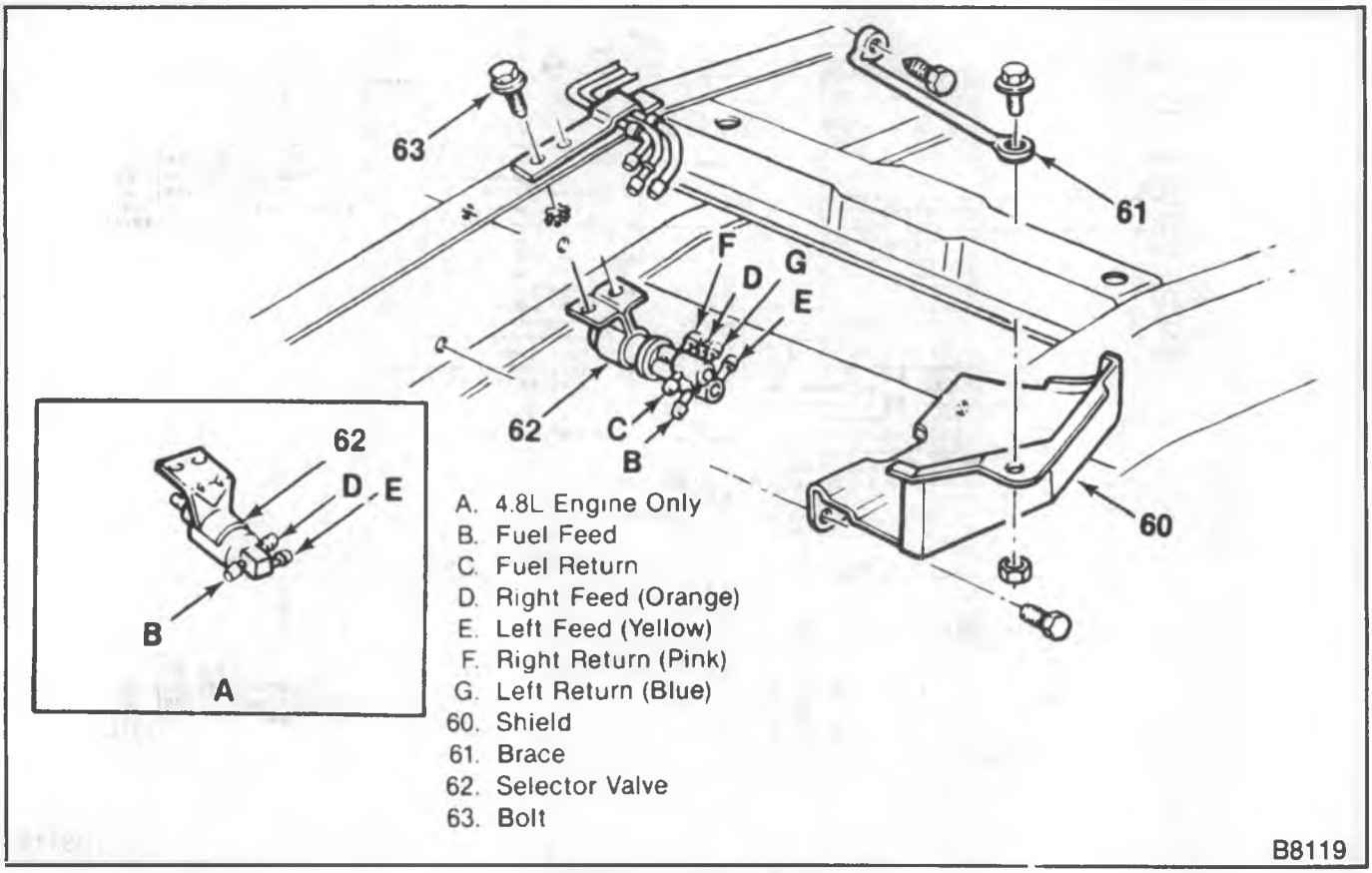

Figure 17—Selector Valve

ACCELERATOR CONTROLS

The accelerator pedal controls the throttle through a cable. There are no linkage adjustments. The throttle cable must be replaced with an identical replacement part.

All linkages and cables must be checked to assure free movement with no rubbing, chafing, or binding. The throttle must operate freely without binding between full closed and wide open throttle.

ACCELERATOR CONTROL CABLE

Observe the following when performing service on the accelerator control cable (figure 18):

- The retainer (101) must be installed with the tangs secured over the head of the stud, (102) (View A).
- The conduit fitting (103) at both ends of the cable (104) must have the locking tangs expanded and locked into the attaching holes. (View B).
- The braided portion of the cable must not come into contact with the front of the dash sealer during replacement. (View C).
- Flexible components (hoses, wires, conduit, etc.) must not be routed within 50 mm (2-inches) of the moving parts of the accelerator linkage unless routing is positively controlled. (View C).
- Lube all pivot points with Accelerator Linkage Lubricant (GM part number 105241, or equivalent).

ACCELERATOR PEDAL

For information on vehicles with Throttle Body Injection (TBI), refer to the Fuel and Emissions Service Manual if you are using X-9132. Refer to the rear of this manual if you are using ST-330-91.

Observe the following when performing service on the accelerator pedal:

- The mounting surface between the support (figure 18) (105) and the dash panel must be free of insulation. The carpet and padding in the pedal and tunnel area must be positioned to lay flat and be free of wrinkles and bunches. (View D).
- Slip the accelerator control cable (104) through the slot in the rod (106) before installing the retainer (109) in the rod. Make sure it is seated properly. Use care in pressing the retainer into the hole so the cable is not kinked or damaged. (View D).
- The linkage must operate freely, without binding, between closed throttle and full throttle.
- Wire, hoses, cable, and other flexible components must not be placed with 13 mm (0.52-inch) of the cable or rod at any point in their travel.
- Throttle pedal spring must be installed as shown in view E.

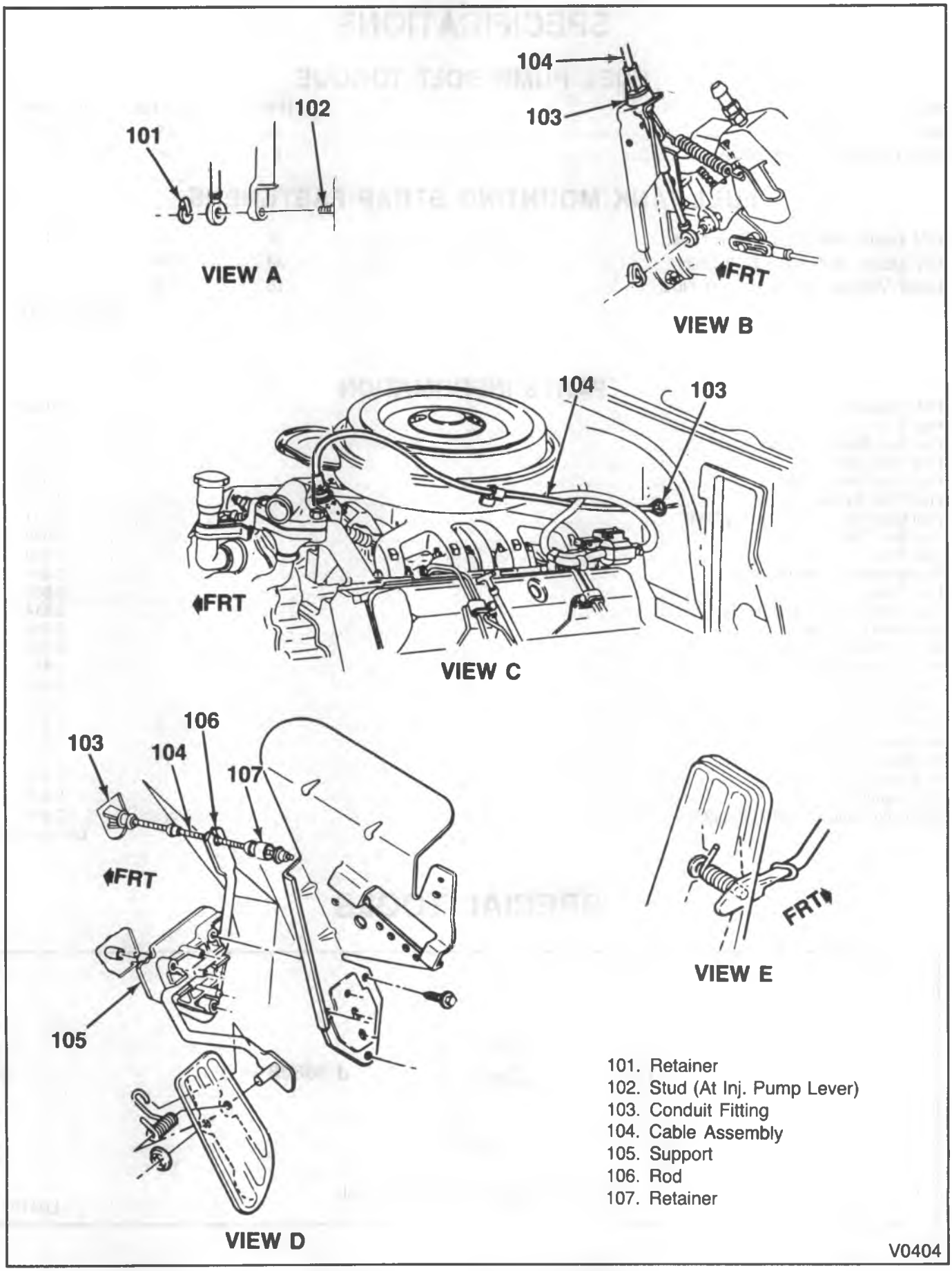

Figure 18—Throttle Cable Assembly

SPECIFICATIONS

FUEL PUMP BOLT TORQUE

Item	N·m	Ft. Lbs.	In. Lbs.
6.2L Engine (Top Bolts)	33	24	—
6.2L Engine (Bottom Bolts)	8	—	72

FUEL TANK MOUNTING STRAP FASTENERS

R/V Model With Base Tank Nuts	6	—	48
R/V Model With RPO NL2 Bolts	33	24	—
Utility Vehicle And Suburban Nuts	16	12	—

TB-0967-2M

PARTS INFORMATION

PART NAME	GROUP
Fuel Tank	3.001
Fuel Tank Strap and Spacer	3.022
Fuel Tank Strap	3.022
Fuel Tank Strap Hook	3.023
Fuel Filter (in Tank)	3.110
Fuel Meter (in Tank) (Sending Unit)	3.107
Fuel Tank Cap	3.028
Fuel Filter	3.890
Fuel Injection Pump (Diesel)	3.306
Fuel Pump	3.900
Cold Advance Solenoid (HPCA)	3.314
Shutdown Coil Frame Kit	3.304
Throttle Body Injection Unit	3.725
Accelerator Pedal	3.451
Accelerator Pedal Pin	3.452
Accelerator Control Cable	3.430
Cable Retainer	8.821
Air Cleaner Element	3.410
Air Cleaner	3.402
Air Cleaner Extension	3.405
Air Cleaner Seal	3.406
Resonator, Duct, Adaptor, Support	3.417

GMTB-3141-2A

SPECIAL TOOLS

1. J 36608

1. Fuel Gage Sending Unit Tool

L0415

SECTION 6C2

DIESEL FUEL INJECTION

***NOTICE:** When fasteners are removed, always reinstall them at the same location from which they were removed. If a fastener needs to be replaced, use the correct part number fastener for that application. If the correct part number fastener is not available, a fastener of equal size and strength (or stronger) may be used. Fasteners that are not reused, and those requiring thread locking compound will be called out. The correct torque value must be used when installing fasteners that require it. If the above conditions are not followed, parts or system damage could result.*

CONTENTS

SUBJECT	PAGE
Description	6C2- 1
Diagnosis	6C2- 2
Housing Pressure Cold Advance Solenoid	6C2- 2
Shutdown Solenoid	6C2- 3
Advance Piston	6C2- 3
On-Vehicle Service	6C2- 3
Fuel Filter Replacement	6C2- 3
Idle Speed Adjustment	6C2- 4
Vacuum Regulator Valve Adjustment (LL4 Engine With Automatic Transmission)	6C2- 5
Housing Pressure Cold Advance	6C2- 5
Injection Line Replacement	6C2- 6
Injection Pump Replacement	6C2- 7
Injection Timing Adjustment	6C2- 8
Marking TDC on the Front Housing	6C2- 9
Injection Nozzle Replacement	6C2-10
Injection Nozzle Tests	6C2-11
Injection Pump On-Vehicle Service	6C2-13
Throttle Position Sensor (TPS) Replacement	6C2-13
Throttle Position Sensor Adjustment	6C2-14
Pump Cover Seal and/or Guide Stud Replacement	6C2-15
Minimum-Maximum Governor Replacement	6C2-17
Throttle Shaft Seal Replacement	6C2-18
Shutdown and/or Cold Advance Solenoid Replacement	6C2-20
Side Cover Gasket Replacement	6C2-21
Injection Pump Off-Vehicle Service	6C2-21
Advance Pin Hole Plug Seal Replacement	6C2-21
Advance Piston Seals Replacement	6C2-22
Advance Piston Replacement	6C2-22
Hydraulic Head Seal Replacement	6C2-22
Drive Shaft Seal Replacement	6C2-23
Pressure Testing the Injection Pump	6C2-24
Specifications	6C2-24
Special Tools	6C2-25

DESCRIPTION

The 6.2L diesel engine fuel system is composed of:

- Fuel tank
- Mechanical fuel pump
- Fuel filter with water sensor and heater
- High pressure lines
- Fuel injection nozzles

Fuel is drawn from the fuel tank by the mechanical pump, located on the right side of the engine. The pump is driven by an eccentric lobe on the camshaft through a push rod. Fuel is then pumped through the filter/water separator. The filter/water separator is located on the engine side of the cowl (R/V Models) or under the rear of the air cleaner (P Models). The fuel is then transferred to the injection pump.

The injection pump is mounted on top of the engine under the intake manifold. The pump is driven by the camshaft through two gears: one is attached to the front of the camshaft and the other is attached to the end of the

injection pump shaft. These gears are the same size and have the same number of teeth; therefore, the injection pump shaft turns at the same speed as the camshaft.

The injection pump is a high-pressure rotary-type pump that meters, pressurizes, and distributes fuel to the eight injector nozzles. The eight high-pressure lines supplying the injectors are all the same length although their shape may be different. The equal-length lines prevent timing differences between cylinders. Injection lines should not be bent to ease removal.

DIAGNOSIS

HOUSING PRESSURE COLD ADVANCE SOLENOID

An inoperative Housing Pressure Cold Advance solenoid (figure 1) may cause white smoke and excessive noise on cold start.

With engine temperature below 27°C (80°F), start and idle engine. Disconnect housing pressure cold advance solenoid connector. If system is operating, a decrease in engine noise and a drop in engine speed will be noticed.

If this does not occur, the system should be diagnosed as follows:

1. Perform the Cold Advance System Electrical Check in DIESEL EMISSIONS (SEC. 6E2).
2. If the cold advance system electrical circuit is operating, remove injection pump cover. Injection pump cover removal is outlined in "Pump Cover Seal and/or Guide Stud Seal Replacement."
3. Ground pump cover. With a fused jumper wire; momentarily touch the housing pressure cold advance solenoid terminal and listen for a "click" sound. If solenoid operates, check for restriction in the fuel return line.
4. If solenoid does not operate, remove the return line connector from the injection pump cover. Determine if the spring loaded checkball, in the return line connector, is stuck. If checkball is stuck, replace return line connector.
5. If checkball moves, use an ohm meter to check for continuity between solenoid housing and injection pump cover. If more than 0.5 ohms, repair poor ground connection.
6. If ground connection is "OK," replace housing pressure cold advance solenoid. Replacement of solenoid is outlined in "Shutdown and/or Cold Advance Solenoid Replacement."

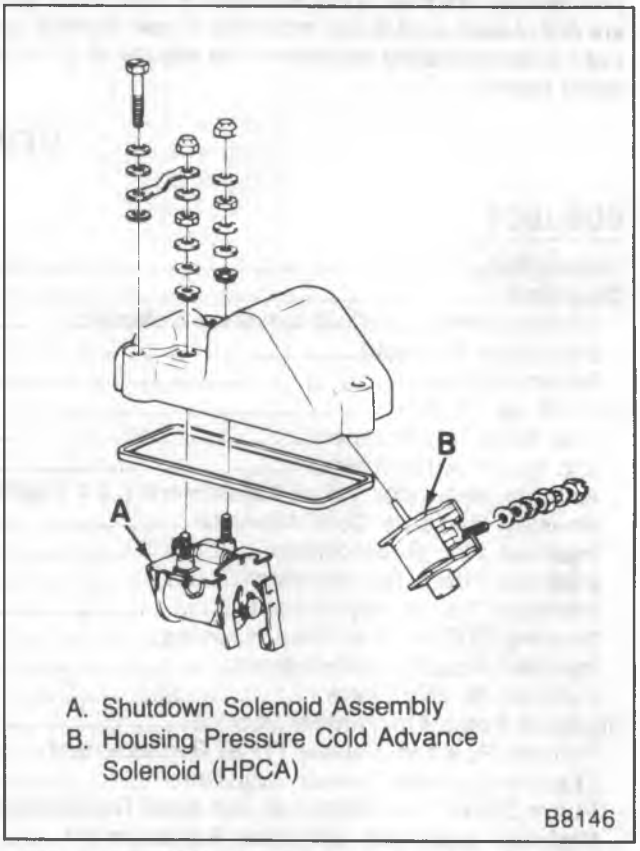

Figure 1—Cold Advance and Shutdown Solenoids

SHUTDOWN SOLENOID

An inoperative Shutdown Solenoid (figure 1) can cause a no-start condition. Disconnect solenoid harness connector and with key "ON" momentarily touch solenoid harness connector to solenoid connector. If a "click" sound is heard, the solenoid circuit is operating properly. If "click" is not heard, the system should be diagnosed as follows:

1. With a test light connected to ground and key "ON," probe shutdown solenoid harness connector. If test light is "OFF," check for an open circuit from the ignition switch to the solenoid.
2. If light is "ON," check ground circuit between solenoid stud and injection pump cover for good connection. If poor connection, repair and retest.
3. If ground circuit is "OK," remove injection pump cover as outlined in "Pump Cover Seal and/or Guide Stud Seal Replacement." Connect a jumper wire between solenoid ground connector and ground. With key "ON," momentarily touch shutdown solenoid harness connector to shutdown solenoid terminal. If solenoid operates, check for internal injection pump problem.
4. If solenoid will not operate, replace shutdown solenoid. Replacement of the shutdown solenoid is outlined in "Shutdown and/or Cold Advance Solenoid Replacement."

ADVANCE PISTON

If the injection pump is determined to be the cause of "low power and excessive smoke" when the engine is cold, the advance piston should be checked for binding or sticking. The following procedure will diagnose a binding or sticking advance piston.

Remove or Disconnect (Figure 2)

Tool Required:

J 29692-B

1. Injection pump as outlined in "Injection Pump Replacement." Mount pump in holding fixture J 29692-B in the inverted position.
2. Rocker lever (56).

NOTICE: Do not strike the plug to loosen. This could distort the bore.

3. Cam advance pin plug (50).
4. Cam advance pin (49).
5. Advance piston bore plugs (52 and 55).

Inspect

NOTICE: Do not exceed the pistons normal travel or rotate the piston in the bore.

- Push piston back and forth in the bore using light finger pressure.

If the piston drags or sticks, this should be noted when the pump is sent in for repair.

Install or Connect (Figure 2)

1. Cam advance pin (49).
2. Cam advance pin plug (50) with a new seal (51).
3. Advance piston bo e plugs (52 and 55) using new seals (53 and 54).
4. Rocker lever (56).
5. Injection pump. Refer to "Injector Pump Replacement" in this section.

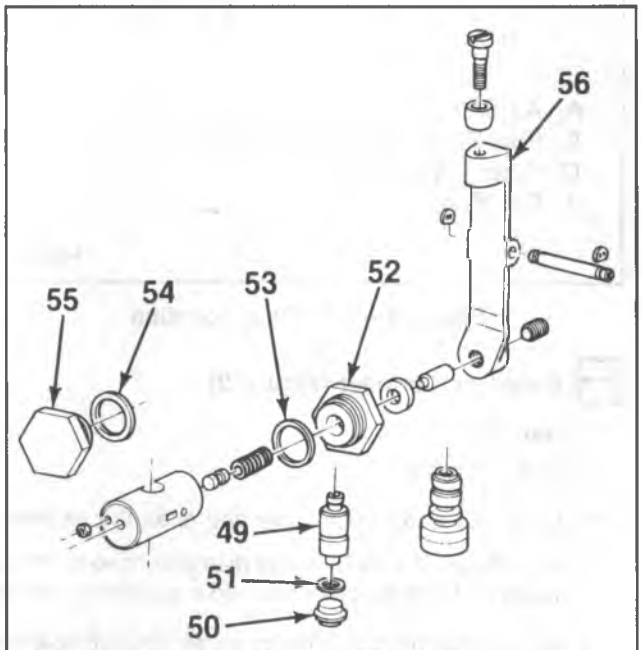

49. Cam Advance Pin
50. Plug
51. Seal
52. Spring Side Plug
53. Seal
54. Seal
55. Power Side Plug
56. Rocker Lever

F5302

Figure 2—Advance Piston Group

ON-VEHICLE SERVICE

FUEL FILTER REPLACEMENT

The fuel filter is mounted on the rear inlet manifold under the air cleaner.

Remove or Disconnect (Figure 3)

1. The fuel tank cap to release pressure or vacuum in the tank.
2. The bail wires (1) using a screwdriver.
   - Drain fuel from the filter by opening both the air bleed and water drain valves and allowing fuel to drain into an appropriate container.
3. Filter.

Clean

- Any dirt from the fuel port sealing surface of the filter adapter and the new filter.

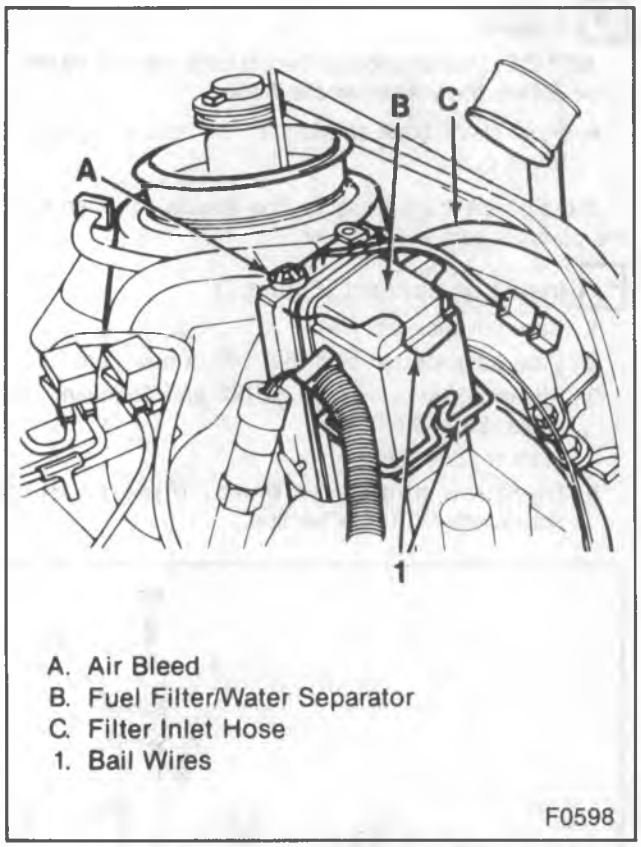

Figure 3—Fuel Filter Location

Install or Connect (Figure 3)

1. New filter.
2. The bail wires.

- Close the water drain valve and open the air bleed.

3. A 3.18 mm (1/8 inch) inside diameter hose to the air bleed port and the other end into a suitable container.

- Disconnect the fuel injection pump shut off solenoid wire.

NOTICE: If the engine is to be cranked, or starting attempted with the air cleaner removed, care must be taken to prevent material from being pulled into the air inlet manifold which could result in engine damage.

- Crank the engine for 10-15 seconds and then wait one minute for the starter motor to cool. Repeat until clear fuel is observed coming from the air bleed.
- Close the air bleed.

4. Injection pump solenoid wire.
5. Fuel tank cap.

- Start the engine and allow it to idle for five minutes.

Inspect

- Fuel filter for leaks.

IDLE SPEED ADJUSTMENT

CURB IDLE SPEED (Figure 4)

Tool Required:

J 26925 Tachometer

1. Set the parking brake and block the drive wheels.
2. Engine must be at normal operating temperature with the air cleaner on and all accessories turned off.
3. Install J 26925 or equivalent per manufacturer's instructions.
4. Adjust the low idle speed screw (2) on the fuel injection pump to obtain the curb idle speed shown on the Emission Control Information label.

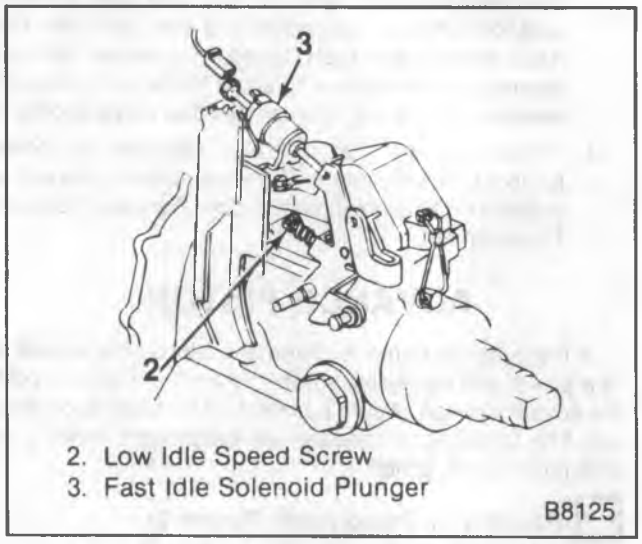

Figure 4—Idle Speed Adjustment Location

FAST IDLE SPEED (Figure 4)

Tool Required:

J 26925 Tachometer

1. Set the parking brake and block the drive wheels.
2. Engine must be at normal operating temperature with the air cleaner on and all accessories turned off.
3. Install J 26925 or equivalent per manufacturer's instructions.
4. Remove the connector from the fast idle solenoid.
5. Connect an insulated jumper wire from the positive battery terminal to the solenoid terminal. This will energize the solenoid.
6. Open the throttle momentarily to energize and fully extend the fast idle solenoid plunger.
7. Adjust the extended fast idle solenoid plunger (3) by turning the hex head to obtain the fast idle speed shown on the Emission Control Information label.
8. Remove the jumper wire and install the connector to the fast idle solenoid.

VACUUM REGULATOR VALVE ADJUSTMENT (LL4 ENGINE WITH AUTOMATIC TRANSMISSION)

Tools Required:

J 33043-2 0.646-inch Gage Block

J 36142 Switch Gage Tool

Adjust (Figures 5 and 6)

1. Loosen the vacuum regulator valve (VRV) so it is free to rotate on the pump.
2. Attach a vacuum source of 67 ± 5kPa (20 inches Hg ± inch Hg) to the bottom vacuum port of the VRV.
3. Attach a vacuum gage to the top vacuum port (figure 5).
4. Insert the 0.646-inch gage block between the gage boss on the injection pump and the wide open stop screw on the throttle lever (switch on position) (figure 6).
5. Rotate the throttle shaft and hold it against the gage block.

NOTICE: Valve must set while rotating the valve body clockwise only.

6. Slowly rotate the vacuum regulator valve body clockwise (facing the valve) until the vacuum gage reads 38.8 ± 2 kPa (11.5 ± 0.6 inches Hg). Hold the valve body at this position and tighten the mounting screws to 6 N•m (54 in. lbs.).
7. Check by allowing the throttle shaft to return to the idle stop position, then rotate the throttle shaft back against the gage block and read the vacuum gage. The gage should read 38.8 ± 2 kPa (11.5 ± 0.6 inches Hg). If vacuum is outside of limits, reset the valve.
8. With the vacuum regulator valve vacuum set, confirm the detent switch point by reading the resistance between the ignition terminal (pink with black stripe) and the detent terminal (orange).
9. Insert J 36142 between the wide open stop pin and the wide open stop screw on the throttle ever (figure 6).
10. Rotate the throttle lever against the tool. There should be no continuity (infinite resistance).
11. Release the throttle lever and remove J 36142 switch gage tool.
12. Rotate the throttle lever to wide-open throttle (the lever stop screw touching the pump stop pin).
13. Check the switch for continuity. The switch must have continuity (1 to 0 ohms) before the throttle reaches the wide-open throttle position. If the switch does not meet these specifications, reset the assembly by returning to step 1 and repeating the entire procedure.

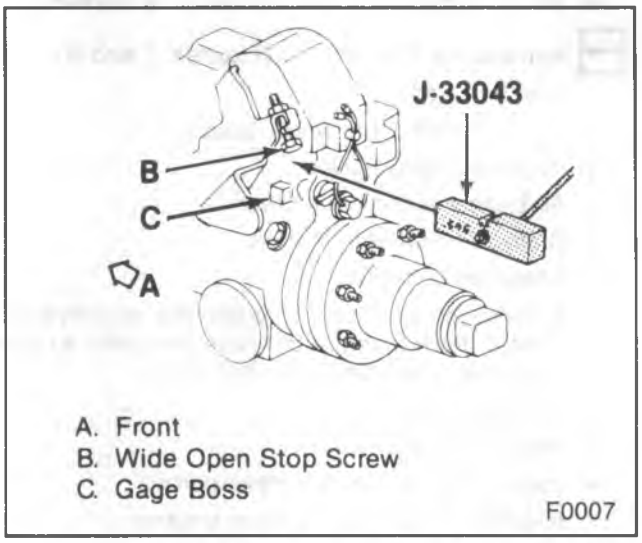

Figure 6—VRV Adjustment Block

HOUSING PRESSURE COLD ADVANCE

The Housing Pressure Cold Advance feature advances the injection timing about four degrees during cold operation. This provides better cold starts, and improved cold idle and emission control.

With the LL4 Heavy-Duty Emissions engine, the circuit is actuated by a coolant temperature switch on the rear of the

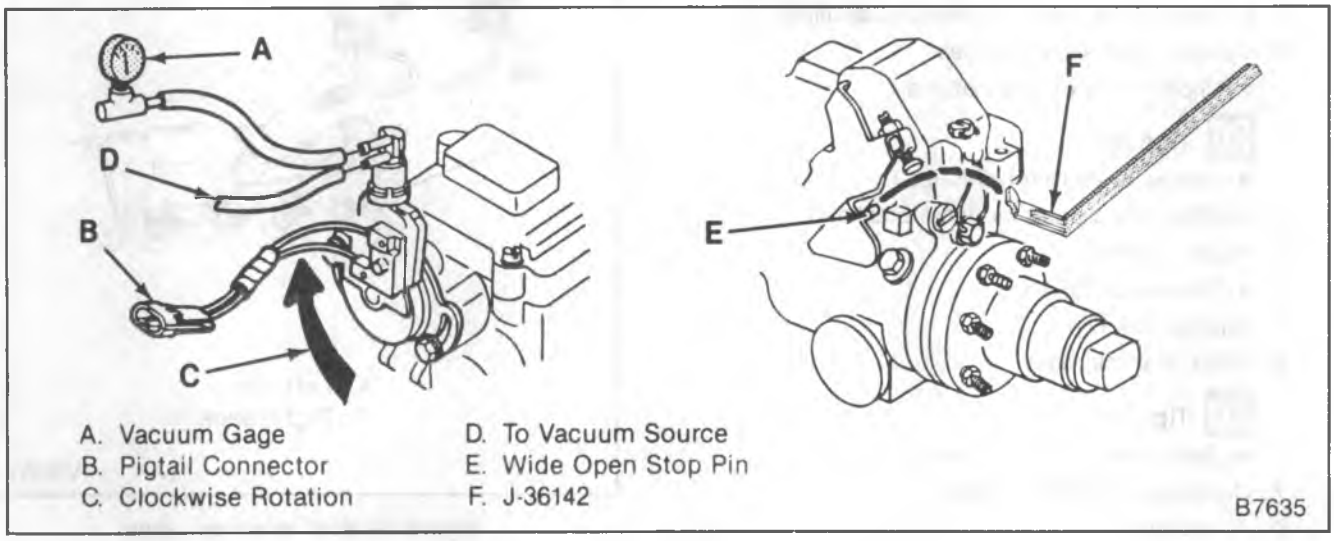

Figure 5—VRV/Detent Switch Adjustment

right cylinder head. The switch is calibrated to open the circuit at 35 degrees C (95 degrees F). Below the switching point, timing is advanced by decreasing housing pressure from 68.95 kPa (10 psi) to zero. Above the switching point, the housing pressure is returned to 68.95 kPa (10 psi). The fast idle solenoid is energized by the same switch.

The LH6 engine system is explained in DIESEL EMISSIONS (SEC. 6E2).

INJECTION LINE REPLACEMENT

Clean

- All line fittings that will be loosened or removed.

Remove or Disconnect (Figures 7 and 8)

Tool Required:

J 29664-1 Protective Covers

1. Negative battery cables.
2. Air cleaner at the valve cover.
3. Crankcase ventilator bracket.
4. Intake manifold bolts.
   - It may be necessary to loosen the vacuum pump hold down clamp and rotate the pump to gain access to all intake manifold bolts.
5. Injection line clips.
6. Intake manifold.
   - Install J 29644-1 to the intake ports.
7. Injection line clips at the loom brackets.
8. Injection lines at the nozzles.
   - Cap the lines and nozzles immediately.
   - Do not bend injection lines.
9. Injection lines at the pump.
   - cap the lines and the pump fittings immediately.
   - Tag the lines for installation.

Install or Connect (Figures 7 and 8)

1. Injection lines at the pump.
   - Uncap the lines and pump fittings.
   - Refer to the tags for correct installation.
2. Injection lines at the nozzles.
   - Uncap the lines and nozzles.

   Tighten
   - Fittings to 25 N•m (20 ft. lbs.).
3. Injection line clips at the loom brackets.
4. Intake manifold.
   - Remove J 29644-1.
5. Injection line clips.
6. Intake manifold bolts.

   Tighten
   - Bolts to 40 N•m (30 ft. lbs.).
7. Crankcase ventilator bracket.
8. Air cleaner.
9. Battery negative cables.

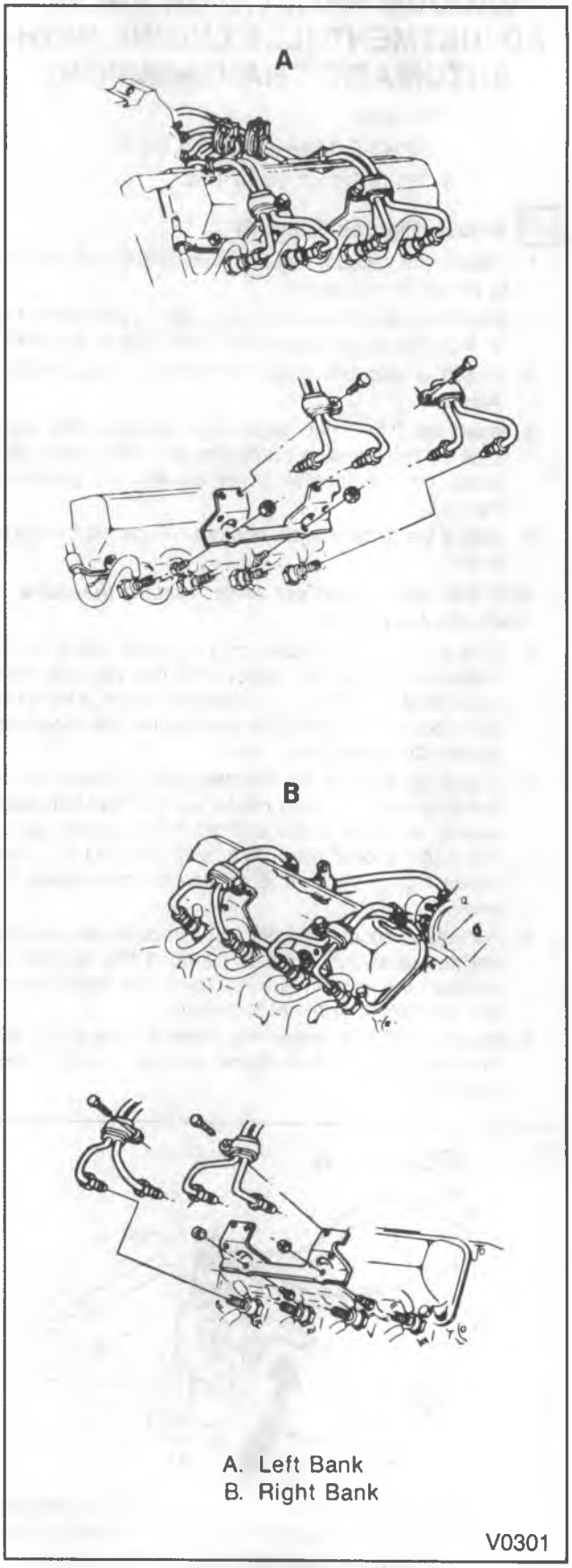

Figure 7—Fuel Injection Lines

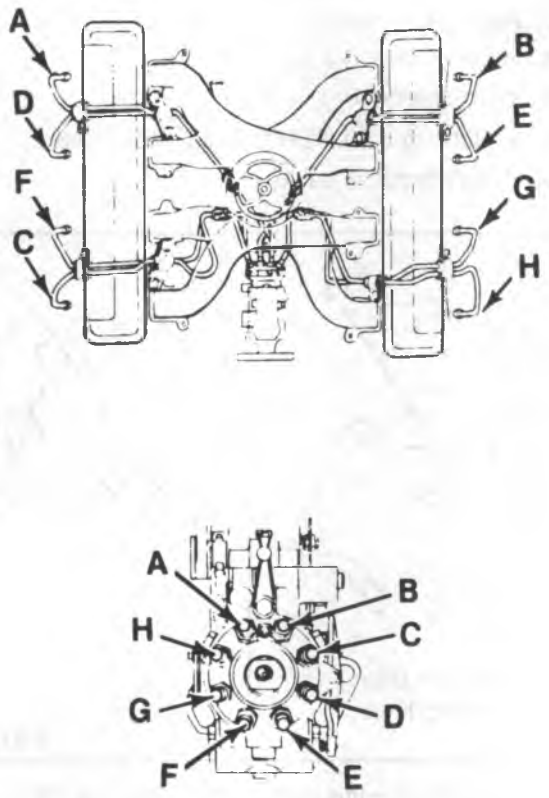

A. Cylinder Number 8
B. Cylinder Number 7
C. Cylinder Number 2
D. Cylinder Number 6
E. Cylinder Number 5
F. Cylinder Number 4
G. Cylinder Number 3
H. Cylinder Number 1

B8131

Figure 8—Injection Line Routing

INJECTION PUMP REPLACEMENT

Remove or Disconnect (Figures 9, 10 and 11)

Tool Required:

J 29664-1 Protective Covers

1. Battery negative cable.
2. Intake manifold.
   - Refer to 6.2 LITER DIESEL (SEC. 6A6).
3. Injection lines.
4. Accelerator cable at the injection pump (figure 9).
5. Detent cable (if equipped).
6. Fuel return line at the top of the injection pump.
7. Fuel inlet line from the injection pump.
8. All necessary wires and hoses from the injection pump.
9. Air conditioning hose retainer bracket (if equipped).
10. Oil fill tube (includes CDR valve bent hose).
11. Grommet.

- Scribe or paint a mark on the front cover and the injection pump flange.
- Rotate the engine to gain access to the bolts that hold the driven gear to the injection pump.
  - Access is gained through the oil filler neck hole (figure 10).

12. Bolts (10).
13. Nuts (11) (figure 11).
14. Pump.
    - Cap all open lines and nozzles.
15. Gasket (12).

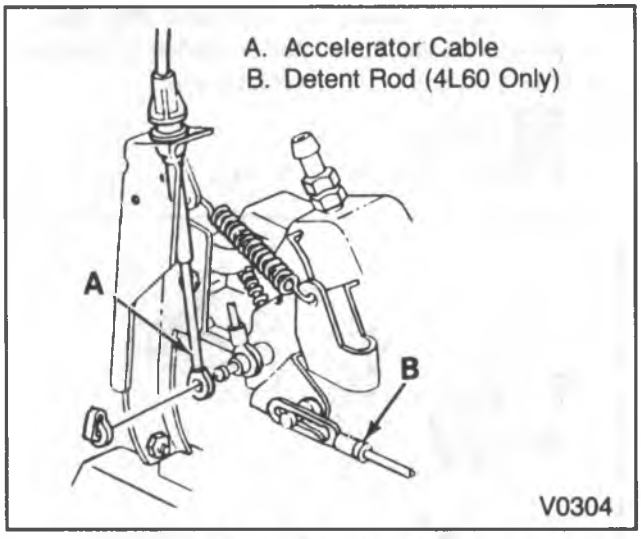

Figure 9—Accelerator Linkage

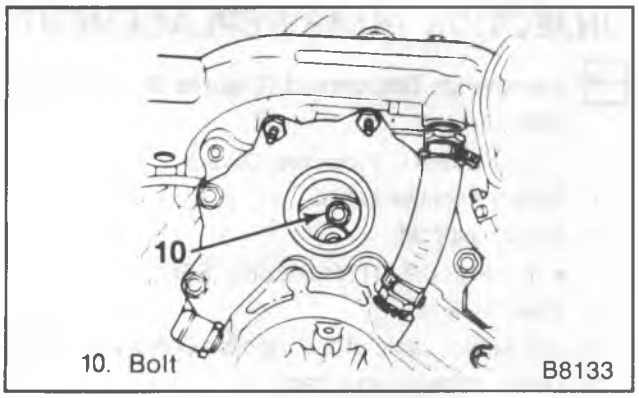

Figure 10—Pump Drive Gear Bolts

Install or Connect (Figures 10, 11 and 12)

1. New gasket (12).
2. Injection pump to the front cover.
   - Align the locating pin on the pump hub (14) with the slot in the injection pump driven gear (13) (figure 12).
   - Align the timing marks (figure 12).
3. Nuts (11) (figure 10).

   Tighten
   - Nuts to 40 N•m (30 ft. lbs.).
   - Check the timing mark alignment before fully torquing the nuts.
4. Drive gear to injection pump bolts (10) (figure 11).

   Tighten
   - Bolts to 25 N•m (20 ft. lbs.).
5. Grommet.
6. Oil fill tube including the CDR valve vent hose.
7. Air conditioning hose retainer bracket (if equipped).
8. Fuel feed line at the injection pump.

   Tighten
   - Fitting to 25 N•m (20 ft. lbs.).
9. Fuel return line to the top of the injection pump.
10. Detent cable (if equipped).
11. All necessary wires and hoses.
12. Accelerator cable.
13. Injection lines.
14. Intake manifold.
    - Refer to 6.2 LITER DIESEL (SEC. 6A6).
15. Battery negative cable.

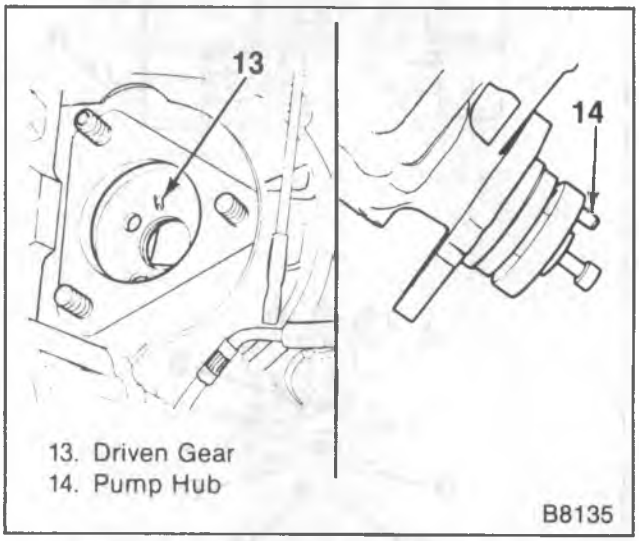

Figure 12—Injection Pump Locating Pin

INJECTION TIMING ADJUSTMENT

Original factory timing is accomplished in two ways. The pump is marked with a static timing mark, and then is dynamically checked by the factory. The dynamic timing mark is designated by a circle. The first mark (a straight line scribed across both the pump flange and the front housing) is the static timing mark. The second mark (a circle also scribed across both the pump flange and the front housing) is the dynamic timing mark.

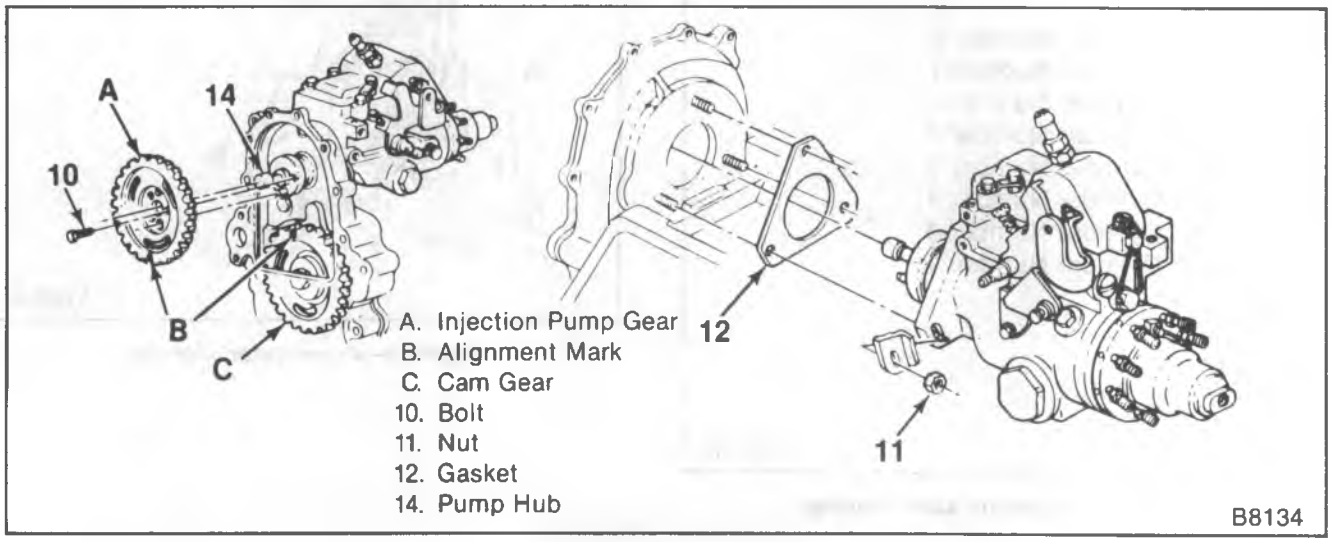

Figure 11—Injection Pump Installation

For the engine to be properly timed, the two halves of the circle, between the pump flange and the front housing must be aligned. The engine must be off while the timing is being set.

A service pump will not be marked with a dynamic timing mark (circle), and should be timed using the static timing mark. Production pumps not marked with a dynamic timing mark (circle) should be timed using the static timing mark.

Adjust (Figure 13)

1. Injection timing.
   - Loosen the three pump retaining nuts.
   - Align the mark on the injection pump with the mark on the front cover.

   Tighten

   - Pump retaining nut to 40 N•m (30 ft. lbs.).
2. Throttle rod.

MARKING TDC ON THE FRONT HOUSING

Tool Required:

J 33042 Timing Fixture.

1. Set the engine so that number 1 cylinder is at TDC (firing).
2. Install J-33042 in the injection pump location.
   - Do not use the gasket.
3. The slot in the injection pump gear should be in the vertical 6 o'clock position (figure 14). If not, remove J 33042 and rotate the engine crankshaft 360 degrees. The timing marks on the gears will be aligned.
4. Fasten J 33042 to the gear and tighten (figure 15).
5. Install one 10 mm nut to the upper housing stud to hold the tool flange.
   - The nut should be finger tight.
6. Tighten the large bolt (18 mm head) clockwise looking at the front of the engine to 48 N•m (35 ft. lbs.).
7. Tighten the 10 mm nut.
8. Check that the crankshaft has not rotated and that the tools did not bind.
9. Strike the scriber with a mallet to mark TDC on the front housing.
10. Remove J 33042.

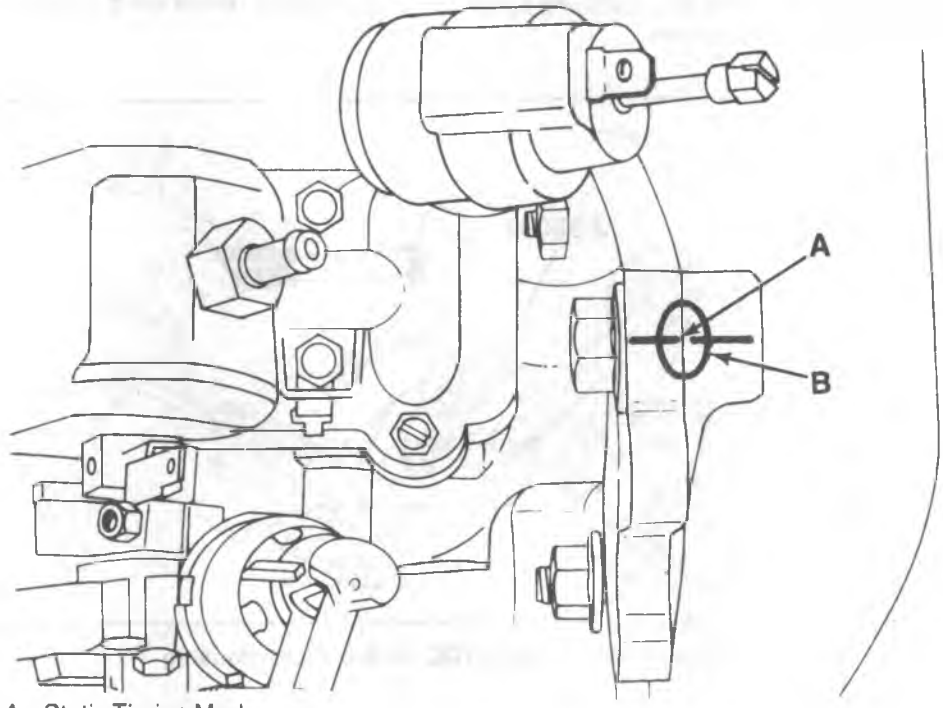

A. Static Timing Marks
B. Dynamic Timing Marks (Not Available on Service Replacement Pumps)

F6917

Figure 13—Timing Alignment Marks

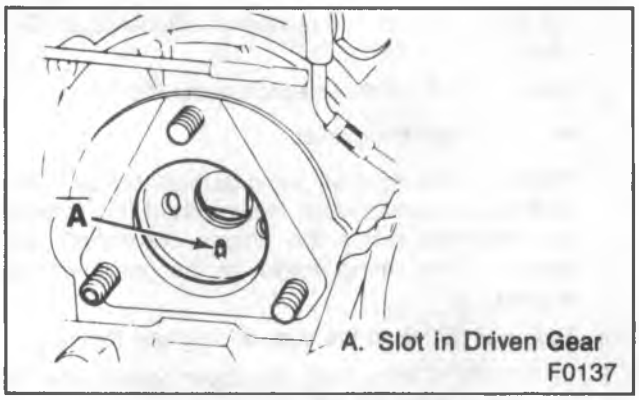

Figure 14—Slot In Injector Pump

Install or Connect

1. Gasket.
2. Injection pump.
3. Nuts (finger tight).
4. One 8 mm bolt to attach the gear to the pump hub.

Tighten

- Bolt to 25 N•m (20 ft. lbs.).
- Injection pump nuts to 40 N•m (30 ft. lbs.).
- Align the timing mark on the injection pump flange with the mark on the front cover.

5. Remaining pump gear attaching bolts.
   - Rotate the engine to gain access to the bolts.

Tighten

- Bolts to 25 N•m (20 ft. lbs.).

INJECTION NOZZLE REPLACEMENT

Remove or Disconnect (Figures 16 and 17)

Tool Required:

J 29873 Nozzle Socket.

1. Negative battery cable.
2. Fuel line clip.
3. Fuel return hose.
4. Fuel injection line.
   - Cap the nozzle and lines.

NOTICE: When removing an injection nozzle, use J 29873. Remove the nozzle using the 30 mm hex portion (figure 16). Failure to do so will result in damage to the injection nozzle.

5. Injection nozzle using J 29873.

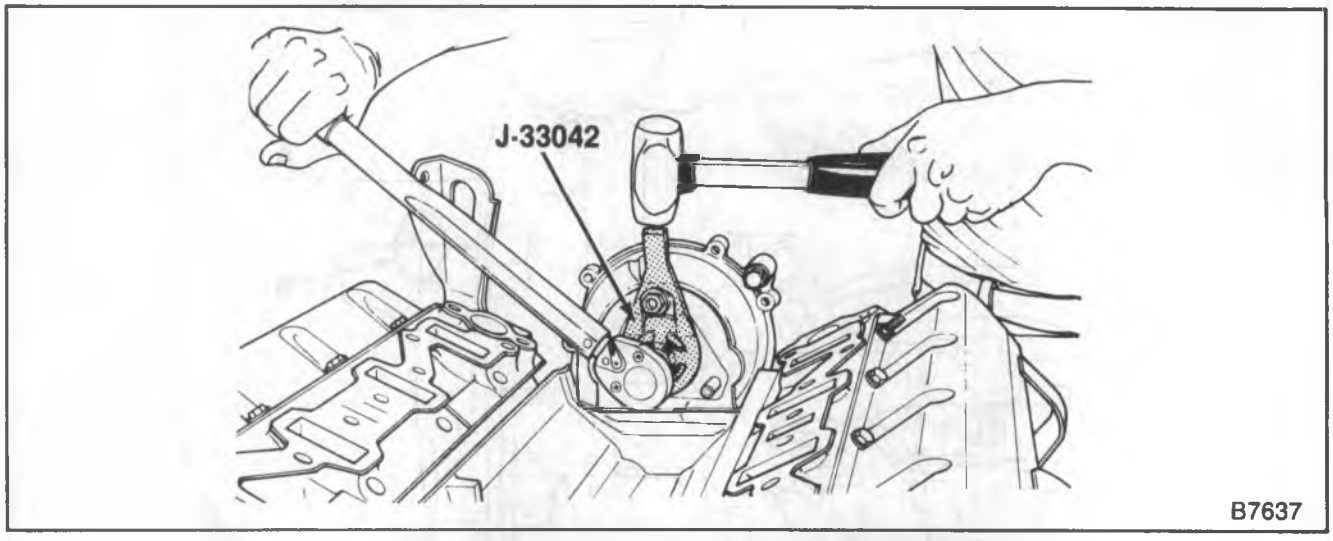

Figure 15—Marking TDC on the Front Housing

Install or Connect (Figures 16 and 17)

Tool Required:

J 29873 Nozzle Socket.

NOTICE: When installing an injection nozzle, use J 29873. Install the nozzle using the 30 mm hex portion (figure 16). Failure to do so will result in damage to the injection nozzle.

1. Injection nozzle using J 29873.

Tighten

- Nozzle to 70 N•m (50 ft. lbs.).

2. Fuel injection line.

Tighten

- Nut to 25 N•m (20 ft. lbs.).

3. Fuel return hose.
4. Fuel line clip.
5. Negative battery cable.

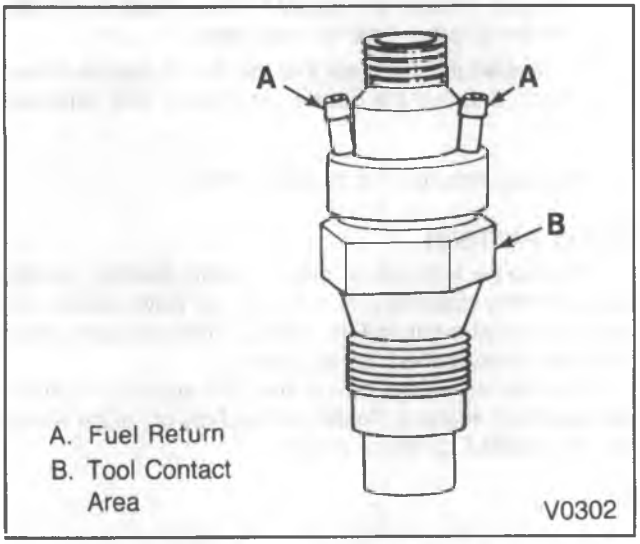

Figure 16—Injection Nozzle

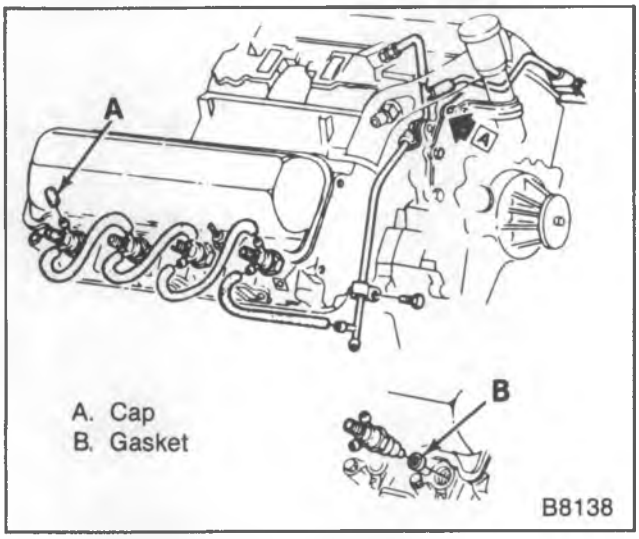

Figure 17—Injection Nozzles

INJECTION NOZZLE TESTS

Nozzle testing is comprised of the following checks.

- Nozzle opening pressure.
- Leakage.
- Chatter.
- Spray pattern.

Each test should be considered independent of the others (for example, when checking opening pressure, do not check for leakage).

If all of the above tests are satisfied, the nozzle holder assembly can be re-used. If any one of the tests is not satisfied, the complete nozzle holder will then be checked and repaired at a centralized location.

- Test Lines - 6 x 2 x 400 mm (1.5 mm bore).
- Test Fluid - per ISO 4113 (Example: Shell V 1399, Viscosity 1487C or equivalent).
- Kinetic Viscosity at 40° - per ISO 3104: 2.45 - 2.75 mm 2/second.
- Test oil temperature during test: 20 - 25°C (68°F - 77°F).
- Refer to the equipment manufacturer's instructions for exact test procedures.

1. Connect the nozzle holder assembly to the test line.
2. Place clean plastic tubes on overflow connections to prevent leakoff from being confused with actual leak.
3. Close the shutoff valve to the pressure gage.

CAUTION: When testing nozzles, do not place your hands or arms near the tip of the nozzle. The high pressure atomized fuel spray from a nozzle has sufficient penetrating power to puncture flesh and destroy tissue and may result in blood poisoning. The nozzle tip should always be enclosed in a receptacle, preferably transparent, to contain the spray.

4. Fill and flush the nozzle holder assembly with test oil by activating the lever briskly and repeatedly. This will apply test oil to all functionally important areas of the nozzle and purge it of air.

OPENING PRESSURE TEST

1. Open the shutoff valve at the pressure gage one-quarter turn.

CAUTION: When testing nozzles, do not place your hands or arms near the top of the nozzle. The high pressure atomized fuel spray from a nozzle has sufficient penetrating power to puncture flesh and destroy tissue and may result in blood poisoning. The nozzle tip should always be enclosed in a receptacle preferable transparent, to contain the spray.

2. Depress the tester lever slowly. Note at what pressure the needle of the pressure gage stopped. The maximum observed pressure is the opening pressure.
   - Some nozzles may pop while other nozzles may drip down (this is not leakage).
3. The opening pressure should not fall below the lower limit of 105 bar (1500 psi) on used nozzles.
4. Replace nozzles which fall below the lower limit.

LEAKAGE TEST

1. Further open the shutoff valve at the pressure gage 1/2 to 1 1/2 turns).
2. Blow-dry the nozzle tip.

CAUTION: When testing nozzles, do not place your hands or arms near the top of the nozzle. The high pressure atomized fuel spray from a nozzle has sufficient penetrating power to puncture flesh and destroy tissue and may result in blood poisoning. The nozzle tip should always be enclosed in a receptacle preferably transparent, to contain the spray.

3. Depress the lever of the manual test stand slowly until the gage reads a pressure of 95 bar (1400 psi). Observe the nozzle tip. A drop may form on the end of the nozzle but should not drop off within a period of 10 seconds.
4. Replace the nozzle assembly if a drop falls during the 10 seconds.

CHATTER TEST

When testing for chatter, it should be noted that the sound (chatter) for new and used nozzles may vary. This is due to carbonized fuel deposits on the pintle and nozzle tip of used nozzles. With some used nozzles, chatter is difficult to detect during slow actuation of the hand lever.

Some nozzles may chatter louder than others. As long as there is chatter, the nozzle is acceptable.

1. Close the shutoff lever at the pressure gage.

CAUTION: When testing nozzles, do not place your hands or arms near the top of the nozzle. The high pressure atomized fuel spray from a nozzle has sufficient penetrating power to puncture flesh and destroy tissue and may result in blood poisoning. The nozzle tip should always be enclosed in a receptacle preferably transparent, to contain the spray.

2. Depress the lever of the test stand slowly and note whether chatter noise can be heard.
3. If not chatter is heard, move the lever faster until it chatters. At fast lever movement, the nozzle may make a "hissing" or "squealing" sound rather than the normal chatter. This is acceptable.
4. These sounds indicate that the nozzle needle moves freely and that the nozzle seat, guide, and pintle are OK.
5. Replace nozzles that do not chatter.

SPRAY PATTERN

This nozzle features a longer nozzle overlap, greater pintle to body clearance, and an internal wave washer between the nozzle nut and the nozzle. These features make objective spray pattern testing difficult.

A pop tester will not deliver fuel fast enough for proper spray pattern analysis. Based on this, type of nozzle should not be rejected for spray pattern.

INJECTION PUMP ON-VEHICLE SERVICE

Refer to figure 18 for injection pump components location.

THROTTLE POSITION SENSOR (TPS) REPLACEMENT

Remove or Disconnect (Figure 19)

1. Connector (56).
2. Screws (57).
3. Sensor (55).

Install or Connect

1. Sensor (55) and screws (57) loose.

   Adjust

   - Refer to "Throttle Position Sensor Adjustment" in this section.

2. Connector.

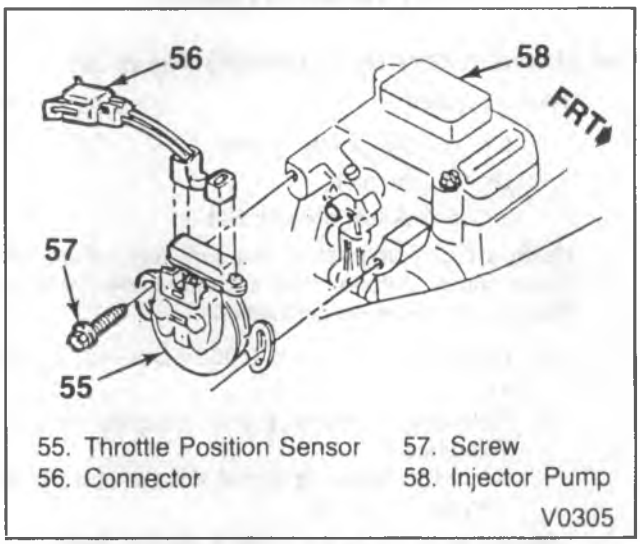

Figure 19—Throttle Position Sensor

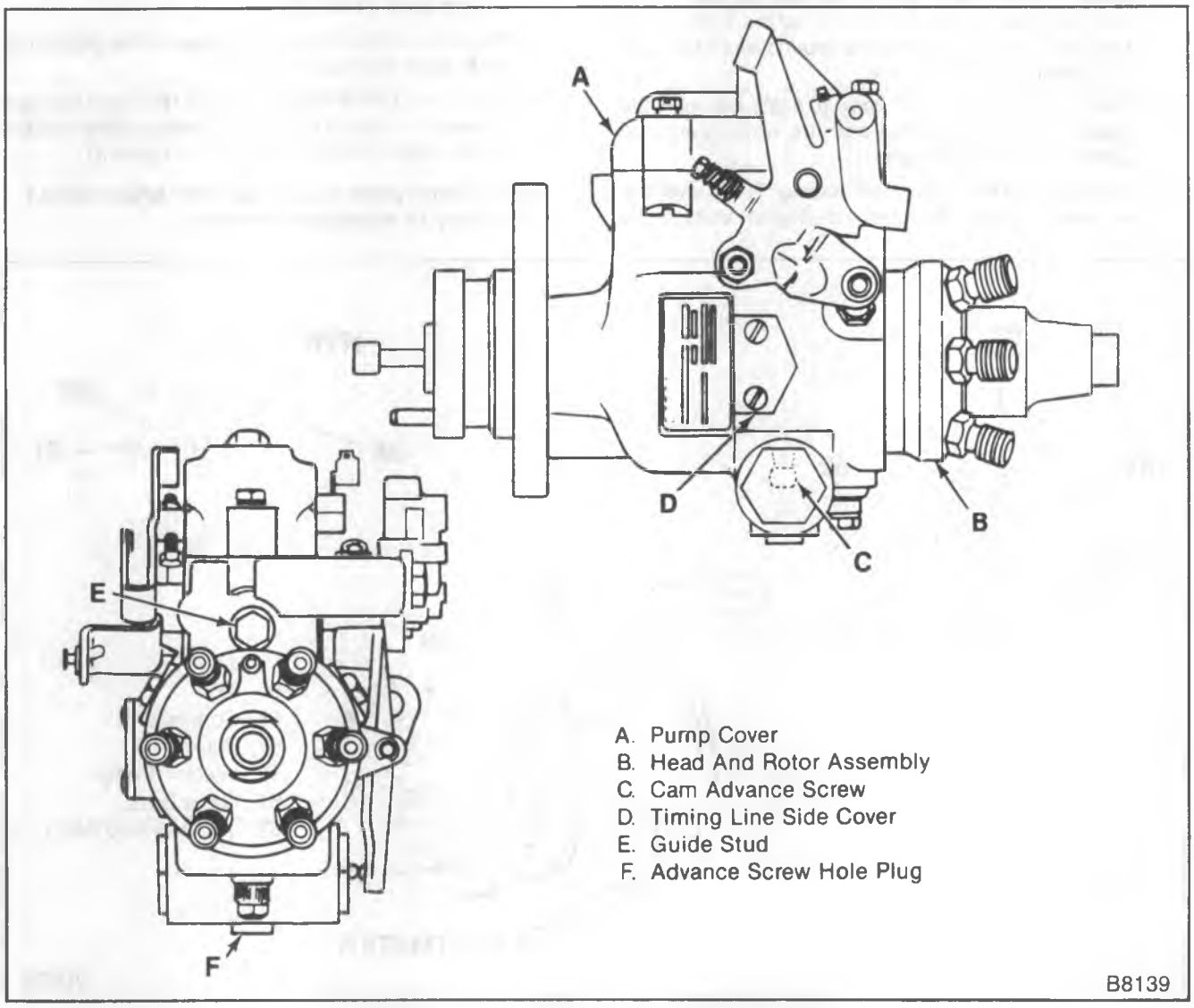

Figure 18—Injection Pump Components Location

THROTTLE POSITION SENSOR (TPS) ADJUSTMENT

LH6 ENGINE (LIGHT DUTY ENGINE) (Figure 20)

Tools Required:

5.-8 volt DC power supply

Digital voltmeter

J 33043-A Gage Block Set

1. Using a digital voltmeter, measure and record the power supply voltage. This is the reference voltage. Perform the following calculations:
   a. Reference voltage x 0.063 = Desired Signal Voltage
   b. Reference voltage x 0.01 = Signal Voltage Tolerance
   Record the Desired Signal Voltage and Signal Voltage Tolerance.
2. Loosen throttle position sensor to injector pump with throttle lever in the closed position.
3. Attach power supply across the ground wire (BLK) and the reference wire (GRA) (+) of the TPS. Attach the digital voltmeter across the ground wire (BLK) and the signal wire (BLU) (+).
4. Insert J 33043-A gage block (0.646") between the gage boss on the pump and the wide-open stop screw on the throttle lever.
5. Rotate the TPS clockwise (facing TPS) until the voltmeter reads the Desired Signal Voltage as determined in step 1A. Hold TPS body at this position and tighten mounting screws (57) to 6 N•m (53 in. lbs.).
6. Release throttle lever and allow it to return to idle position. At idle, the voltmeter should indicate a voltage ratio between 0.30 and 0.15. If not, check for a faulty sensor.
7. Rotate throttle lever against gage block and re-check the Desired Signal Voltage Tolerance determined in step 1B. If re-adjustment is required, go back to step 2.

LL4 ENGINE (HEAVY DUTY) (Figure 21)

Tool Required:

J 33043-A Gage Block Set

1. Disconnect TPS connector (56).
2. Loosen screws (56) with throttle closed.
3. Attach test light across switch terminals.
4. Insert J 33043-A (0.280") gage block between the gage boss and the wide open stop screw on the throttle shaft. (View A).
5. Rotate and hold throttle lever against the gage block (wide open throttle). (View B).
6. Rotate the TPS clockwise (facing TPS) until test light comes on. Hold TPS in this position and tighten screws (56) to torque specified in figure 21.

Note: Switch point must be set only while rotating TPS body in clockwise direction.

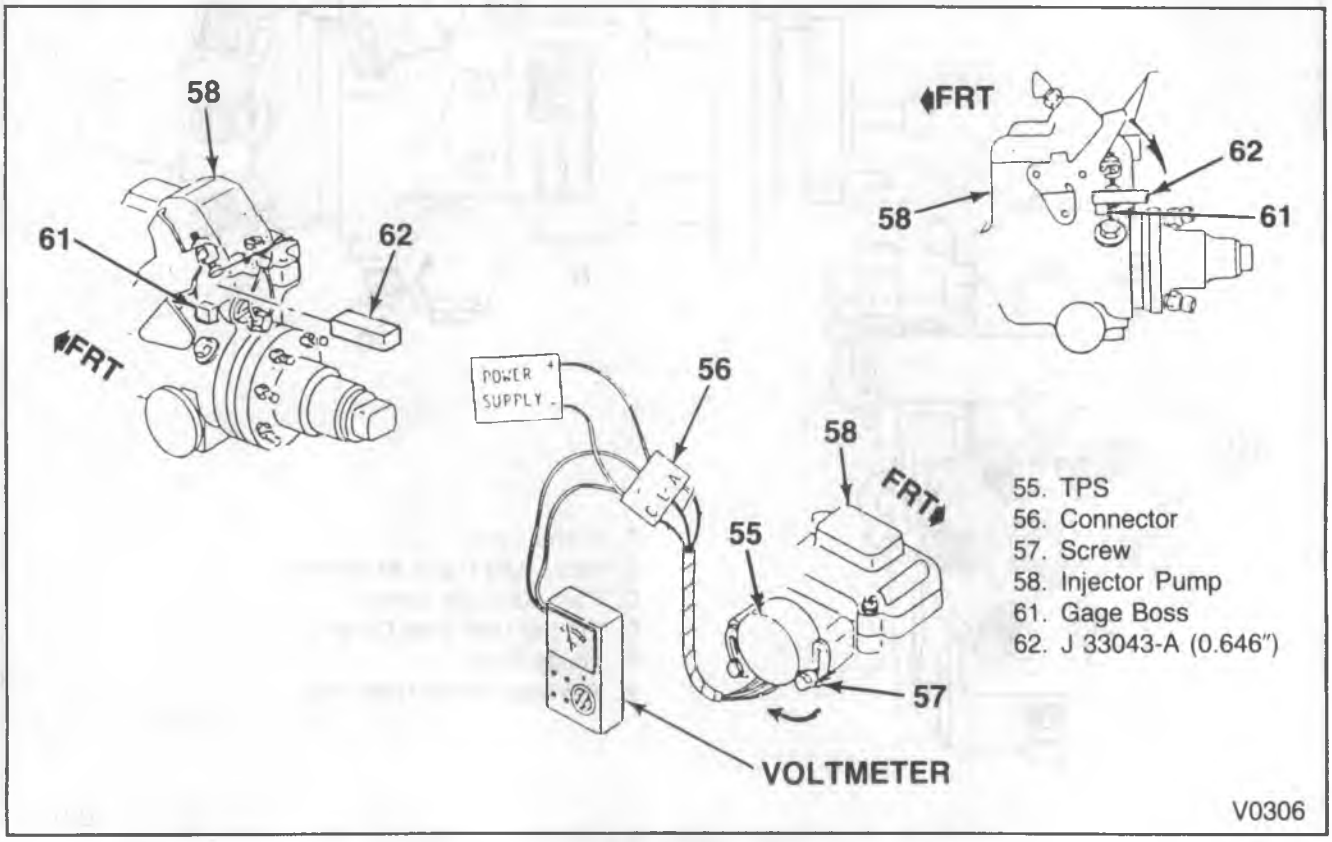

Figure 20—TPS Adjustment

7. Release throttle lever and allow it to return to idle position. Remove the "switch closed" gage block (0.280"). Insert J 33043-A (0.310") gage block (View C). The test light should not be lit. If test light is not on, TPS is set properly. If test light is lit, the TPS is not set properly and must be reset by returning to step 1 and repeating entire procedure.
8. Reconnect TPS connector (56).

PUMP COVER SEAL AND/OR GUIDE STUD SEAL REPLACEMENT

Remove or Disconnect

Tool Required:

J 29664 Manifold Cover Set

1. Negative battery cables.
2. Air cleaner and intake manifold. Refer to "6.2 Liter Diesel" (SEC. 6A6) for replacement procedure.
   - Install J 29664 in the cylinder heads.
3. Injection pump fuel solenoid wire.
4. Housing pressure cold advance wire.
5. Fuel return line.
6. Top attaching bolt and loosen the lower attaching bolt on the fast idle solenoid. Move the solenoid aside.
7. Injection pump cover screws.

Clean

- Injection pump cover.
- Upper portion of the pump.
- The guide stud area.
- Place several rags in the engine valley to catch fuel.

NOTICE: Extreme care must be used to keep foreign material out of the pump when the cover is off. If any objects are dropped into the pump, they must be removed before the engine is started or injection pump and engine damage could occur.

8. Injection pump cover.
9. The guide stud and washer.
   - Note the location of parts prior to removal.
   - Observe the position of the metering valve spring over the top of the guide stud (figure 22). This position must be exactly duplicated during assembly.
10. Pump cover seal from the pump cover.

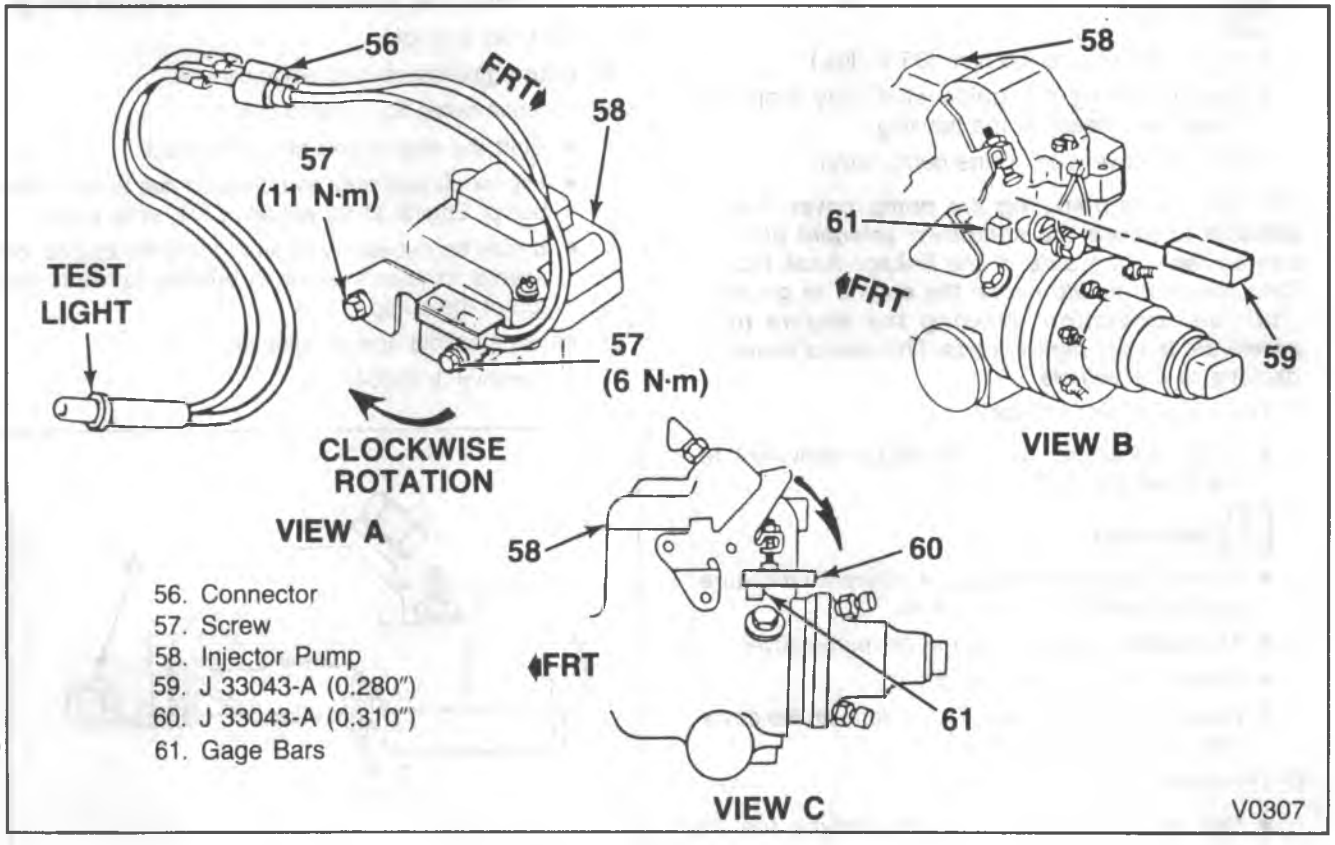

Figure 21—TPS Adjustment

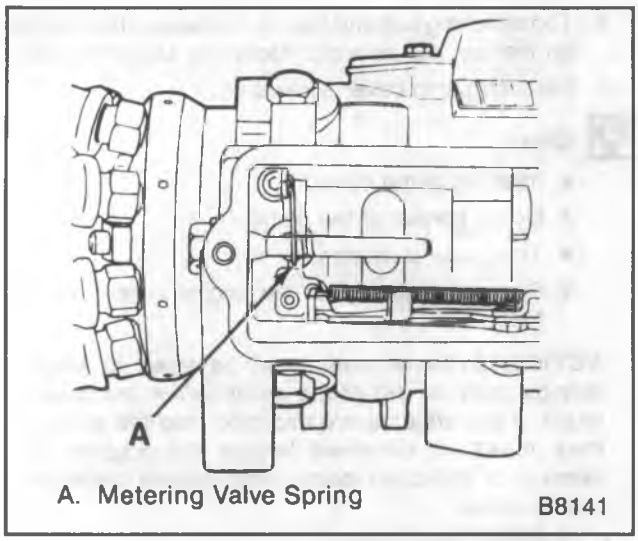

Figure 22—Metering Valve Spring Position

Install or Connect

Tool Required:

Stanadyne tool No. 26528 (or equivalent)

1. The guide stud with a new washer.
   - Make sure that the upper extension of the metering valve rides on top to the guide studs.

   Tighten
   - The guide stud to 9.5 N•m (85 in. lbs.).
   - Overtightening the guide stud may strip the aluminum threads in the housing.
2. New pump cover seal in the pump cover.

NOTICE: When installing the pump cover it is possible to locate the shutdown solenoid pivot arm on the wrong side of the linkage hook tab. This condition would cause the engine to go to "full run" operation, causing the engine to accelerate to very high speeds. This could cause damage to the vehicle.

3. The pump cover (with tool).
   - Install Stanadyne tool No. 26528 (or equivalent) to the cover (figure 23).

   Important
   - If this tool is not available, a different procedure must be used. Refer to step 4.
   - The screws should not be in the pump cover.
   - Position the cover on the pump.
   - Rotate the tool and slide it from beneath the cover with the cover in position.
4. The pump cover (without tool).
   - Use this procedure if the Stanadyne tool is unavailable.
   - The screws should not be in the pump cover.
   - Position the cover shaft about 6 mm (1/4-inch) forward (toward the shaft end) and about 3 mm (1/8-inch) above the pump (figure 24).
   - Move the cover rearward and downward into position, being careful not to cut the seal.
   - Hold the throttle in the idle position.
5. The cover screws.
   - Be careful not to drop or lose the flat washer and spring washer on each screw.
   - The flat washer must be against the pump cover.

   Tighten
   - Screws to 3.7 N•m (33 in. lbs.).
6. Battery negative cables.

Inspect

- Turn the ignition switch to the run position and touch the pink wire to the solenoid connector. A clicking noise should be heard as the wire is connected and disconnected. If this clicking is not heard, the linkage may be jammed in the wide open throttle position and the engine **MUST NOT BE STARTED.** If clicking is not heard, remove the cover and ground the solenoid lead (opposite the hot lead) and connect the pink wire. With the ignition switch in the run position, the solenoid in the cover should move the linkage. If not, the solenoid must be replaced. Minimum voltage across the terminals must be 12.0. Install the cover and repeat the inspection.

7. Fuel return line, throttle cable, and the return springs.
8. Fast idle solenoid.
9. Housing pressure cold advance wire.
10. Injection pump fuel solenoid wire.
    - Start the engine and check for leaks.
    - Idle roughness may be observed due to air in the pump. Engine idling will allow the air to purge.
    - It may be necessary to shut down the engine for several minutes to allow air bubbles to rise to the top of the pump.
11. Intake manifold and air cleaner.
    - Remove J 29664.

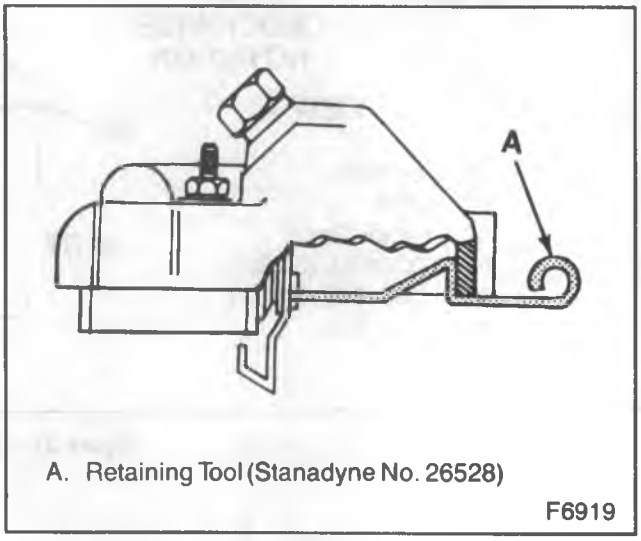

Figure 23—Shutdown Solenoid Retaining Tool

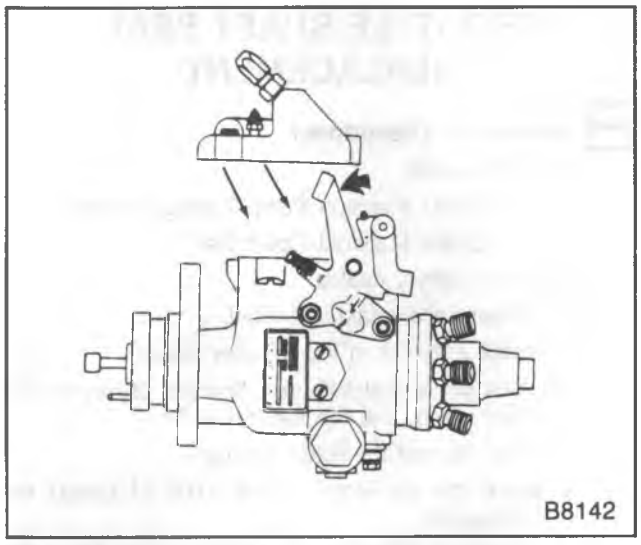

Figure 24—Installing the Injection Pump Cover

MINIMUM-MAXIMUM GOVERNOR REPLACEMENT

Remove or Disconnect (Figure 25)

Tool Required:

J 29664 Manifold Cover Set

1. Negative battery cables.
2. Air cleaner and intake manifold.
   - Install J 29664 in the cylinder heads.
3. Injection pump fuel solenoid wire.
4. Housing pressure cold advance wire.
5. Fuel return line.
6. Fast idle solenoid top attaching bolt.
   - Loosen the lower bolt, and move the solenoid aside.
7. Injection pump cover screws.

Clean

- Injection pump cover.
- Upper portion of the pump.
- The guide stud area.
- Place several rags in the engine valley to catch the fuel.

NOTICE: Extreme care must be used to keep foreign material out of the pump when the cover is off. If any objects are dropped into the pump, they must be removed before the engine is started or injection pump and engine damage could occur.

8. Injection pump cover.
9. The guide stud and washer.
   - Note the location of parts prior to removal.
   - Observe the position of the metering valve spring over the top of the guide stud (figure 22). This position must be exactly duplicated during assembly.
10. Pump cover seal from the pump cover.
11. Minimum-Maximum governor assembly.
    - Rotate the throttle shaft and the governor assembly until the governor clears the housing.
    - Governor assembly from the throttle shaft.

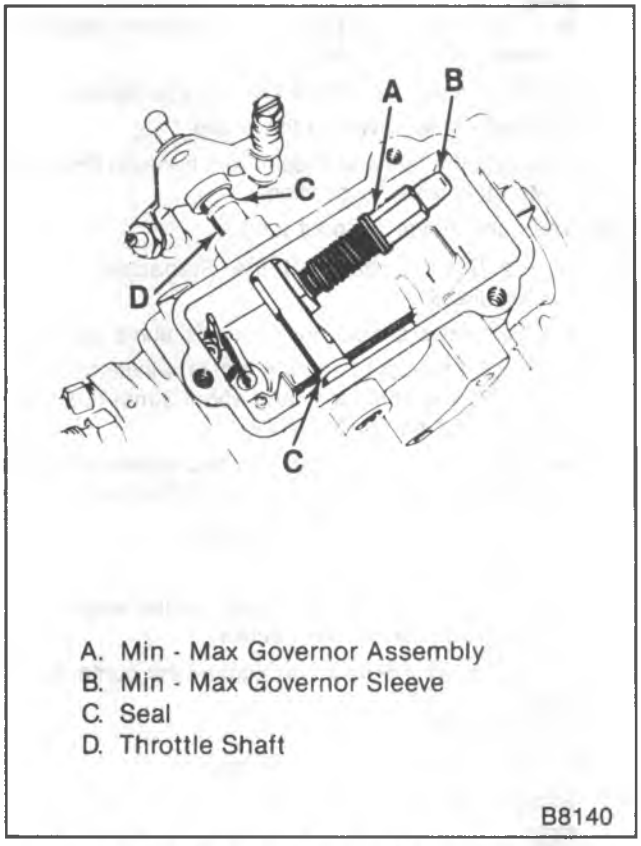

Figure 25—Injection Pump Cover Removed

Install or Connect (Figure 25)

Tool Required:

Stanadyne tool No. 26528 (or equivalent).

1. Minimum-Maximum governor assembly.
   - Rotate throttle shaft to full throttle.
   - Place the slotted portion of the governor assembly onto the throttle shaft slot.
   - Rotate the throttle shaft with governor assembly into the housing.
2. The guide stud with a new washer.
   - Make sure that the upper extension of the metering valve rides on top to the guide studs.

Tighten

- The guide stud to 9.5 N•m (85 in. lbs.).
- Overtightening the guide stud may strip the aluminum threads in the housing.

3. New pump cover seal in the pump cover.

NOTICE: When installing the pump cover it is possible to locate the shutdown solenoid pivot arm on the wrong side of the linkage hook tab. This condition would cause the engine to go to "full run" operation, causing the engine to accelerate to very high speeds. This could cause damage to the vehicle.

4. The pump cover (with tool).
   - Install Stanadyne tool No. 26528 (or equivalent) to the cover (figure 23).

Important

- If this tool is not available, a different procedure must be used. Refer to step 4.
- The screws should not be in the pump cover.
- Position the cover on the pump.
- Rotate the tool and slide it from beneath the cover with the cover in position.

5. The pump cover (without tool).
   - Use this procedure if the Stanadyne tool is unavailable.
   - The screws should not be in the pump cover.
   - Position the cover about 6 mm (1/4-inch) foreword (toward the shaft end) and about 3 mm (1/8-inch) above the pump (figure 24).
   - Move the cover rearward and downward into position, being careful not to cut the seal.
- Hold the throttle in the idle position.

6. The cover screws.
   - Be careful not to drop or lose the flat washer and spring washer on each screw.
   - The flat washer must be against the pump cover.

Tighten

- Screws to 3.7 N•m (33 in. lbs.).

7. Battery negative cables.

Inspect

- Turn the ignition switch to the run position and touch the pink wire to the solenoid connector. A clicking noise should be heard as the wires are connected and disconnected. If this clicking is not heard, the linkage may be jammed in the wide open throttle position and the engine **MUST NOT BE STARTED.** If clicking is not heard, remove the cover and ground the solenoid lead (opposite the hot lead) and connect the pink wire. With the ignition switch in the run position, the solenoid in the cover should move the linkage. If not, the solenoid must be replaced. Minimum voltage across the terminals must be 12.0. Install the cover and repeat the inspection.

8. Fuel return line, throttle cable, and the return springs.
9. Fast idle solenoid.
10. Housing pressure cold advance wire.
11. Injection pump fuel solenoid wire.
    - Start the engine and check for leaks.
    - Idle roughness may be observed due to air in the pump. Engine idling will allow the air to purge.
    - It may be necessary to shut down the engine for several minutes to allow air bubbles to rise to the top of the pump.
12. Intake manifold and air cleaner.
    - Remove J 29664.

THROTTLE SHAFT SEAL REPLACEMENT

Remove or Disconnect

Tools Required:

J 29601 Injection Pump Timing Adapter

J 29664 Manifold Cover Set

1. Negative battery cables.
2. Air cleaner and intake manifold.
   - Install J 29664 in the cylinder heads.
3. Injection pump fuel solenoid, housing pressure cold advance wires, and the fuel return line.
4. Throttle rod and the return springs.
   - Mark the position to the VRV (if used) for installation.
5. Top attaching bolt on the fast idle solenoid. Move the solenoid aside.
6. Throttle cable bracket.
7. Throttle shaft advance cam and fiber washer.
   - Install J 29601 over the throttle shaft with the slots on the tool engaging the pin (figure 26). Put the spring clip over the throttle shaft advance cam and tighten the wing nut. Pull the tool off of the shaft without loosening the wingnut. This provides proper advance cam alignment for assembly.
   - Loosen the face cam shaft.
   - Drive the pin from the throttle shaft.
8. Any burrs from the throttle shaft that may have resulted from pin removal.
9. Injection pump cover screws.

Clean

- Injection pump cover.
- Upper portion of the pump.
- The guide stud area.
- Place several rags in the engine valley to catch fuel.

NOTICE: Extreme care must be used to keep foreign material out of the pump when the cover is off. If any objects are dropped into the pump, they must be removed before the engine is started or injection pump and engine damage could occur.

10. Injection pump cover.
11. The guide stud and washer.
    - Note location of parts prior to removal.
    - Observe the position of the metering valve spring over the top of the guide stud (figure 18). This position must be exactly duplicated during assembly.
12. Min - max governor assembly (figure 25).
    - Rotate the assembly up to provide clearance.
    - If the idle governor spring becomes disengaged from the throttle block, it must be reinstalled with the tightly wound coils toward the throttle block.
13. The throttle shaft assembly.

Inspect

- Throttle shaft for unusual wear or damage.
- Throttle shaft bushings for damage or unusual wear or leaks.
- Remove the pump and send it to the local Stanadyne dealer if bushing replacement is necessary.

14. The throttle shaft seals.
    - Do not attempt to cut the seals, as nicks in the seal seat will cause leakage.

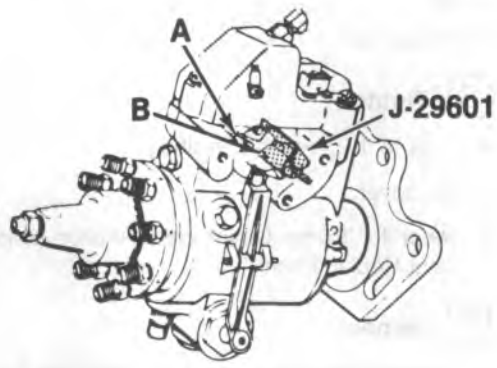

A. Throttle Shaft Advance Cam
B. Throttle Shaft Pin

B8144

Figure 26—J 29601 Installed on Pump

Install or Connect

Tools Required:

J 29601 Injection Pump Timing Adapter
J 33198 Synkut Oil Seal Lubricant

1. New throttle shaft seals.
   - Use care not to cut the seal on the sharp edges of the shaft.
   - Apply J 33198 or a light coating of clean chassis grease to the seals.
2. The throttle shaft to the point where the min-max governor assembly will slide back onto the shaft.
3. Throttle shaft and governor into position.
   - Rotate the min - max governor assembly downward (figure 25).
4. New mylar washer, the throttle shaft advance cam, and a new throttle shaft drive pin (figure 23).
   - Do not tighten the cam screw.
5. J 29601 over the throttle shaft with the pin in the slots and the spring clip over the advance cam.
6. A 0.005-inch feeler gage between the white washer on the throttle shaft and the pump housing (figure 27).

Tighten

- Cam screw to 3.1 N•m (30 in. lbs.).
- Squeeze the throttle shaft.
- Secure the screw with Loctite 290 or equivalent.

- Remove J 29601.

7. The guide stud with a new washer.
   - Make sure that the upper extension of the metering valve rides on top to the guide studs.

Tighten

- The guide stud to 9.5 N•m (85 in. lbs.).
- Overtightening the guide stud may strip the aluminum threads in the housing.

8. New pump cover seal in the pump cover.

NOTICE: When installing the pump cover it is possible to locate the shutdown solenoid pivot arm on the wrong side of the linkage hook tab. This condition would cause the engine to go to "full run" operation, causing the engine to accelerate to very high speeds. This could cause damage to the vehicle.

9. The pump cover (with tool).
   - Install Stanadyne tool No. 26528 (or equivalent) to the cover (figure 23).

Important

- If this tool is not available, a different procedure must be used. Refer to step 4.
- The screws should not be in the pump cover.
- Position the cover on the pump.
- Rotate the tool and slide it from beneath the cover with the cover in position.

10. The pump cover (without tool).
    - Use this procedure if the Stanadyne tool is unavailable.
    - The screws should not be in the pump cover.
    - Position the cover about 6 mm (1/4-inch) forward (toward the shaft end) and about 3 mm (1/8-inch) above the pump (figure 24).
    - Move the cover rearward and downward into position, being careful not to cut the seal.
    - Hold the throttle in the idle position.
11. The cover screws.
    - Be careful not to drop or lose the flat washer and spring washer on each screw.
    - The flat washer must be against the pump cover.

Tighten

- Screws to 3.7 N•m (33 in. lbs.).

12. VRV (if used).

13. Battery negative cables.

Inspect

- Turn the ignition switch to the run position and touch the pink wire to the solenoid connector. A clicking noise should be heard as the wire is connected and disconnected. If this clicking is not heard, the linkage may be jammed in the wide open throttle position and the engine MUST NOT BE STARTED. If clicking is not heard, remove the cover and ground the solenoid lead (opposite the hot lead) and connect the pink wire. With the ignition switch in the run position, the solenoid in the cover should move the linkage. If not, the solenoid must be replaced. Minimum voltage across the terminals must be 12.0. Install the cover and repeat the inspection.

14. Fuel return line, throttle cable, and the return springs.
15. Fast idle solenoid.
16. Housing pressure cold advance wire.
17. Injection pump fuel solenoid wire.

- Start the engine and check for leaks.
- Idle roughness may be observed due to air in the pump. Engine idling will allow the air to purge.
  - It may be necessary to shut down the engine for several minutes to allow air bubbles to rise to the top of the pump.

18. Intake manifold and air cleaner.
    - Remove J 29664.

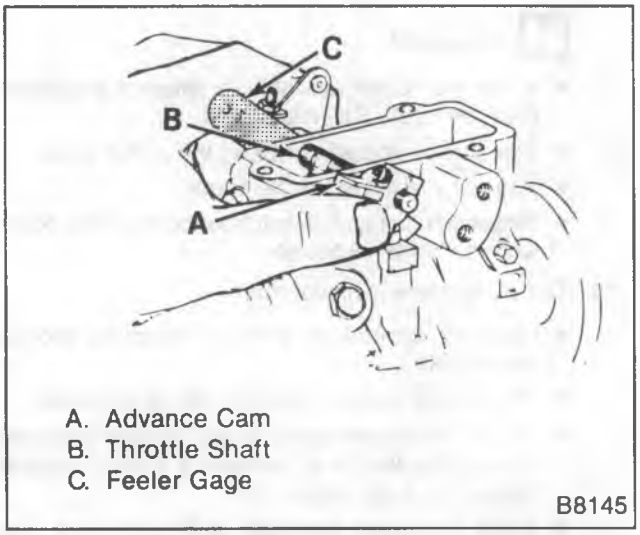

Figure 27 – Setting Advance Cam to Housing Clearance

SHUTDOWN AND/OR HOUSING PRESSURE COLD ADVANCE SOLENOID REPLACEMENT

Remove or Disconnect (Figure 28)

1. Pump cover.
   - Refer to "Pump Cover Seal And/Or Guide Stud Seal Replacement."
2. Terminal contact nuts.
3. Solenoid.
   - Note the positions of the insulating washers.

Install or Connect (Figure 25)

1. Solenoid in the pump cover.
   - On the shutdown solenoid, make sure that the linkage is free.
   - On the cold advance solenoid, make sure that the plunger is centered so that it will contact the check ball in the fitting.
2. Insulating washers on the terminal studs (where used).
3. Terminal nuts.

Tighten

- Nuts to 1.2 N•m (12 in. lbs.).

4. Pump cover.
   - Refer to "Pump Cover Seal And/Or Guide Stud Seal Replacement."

Inspect

- Solenoid operation prior to installing the pump cover. Use a 12 V DC power source.

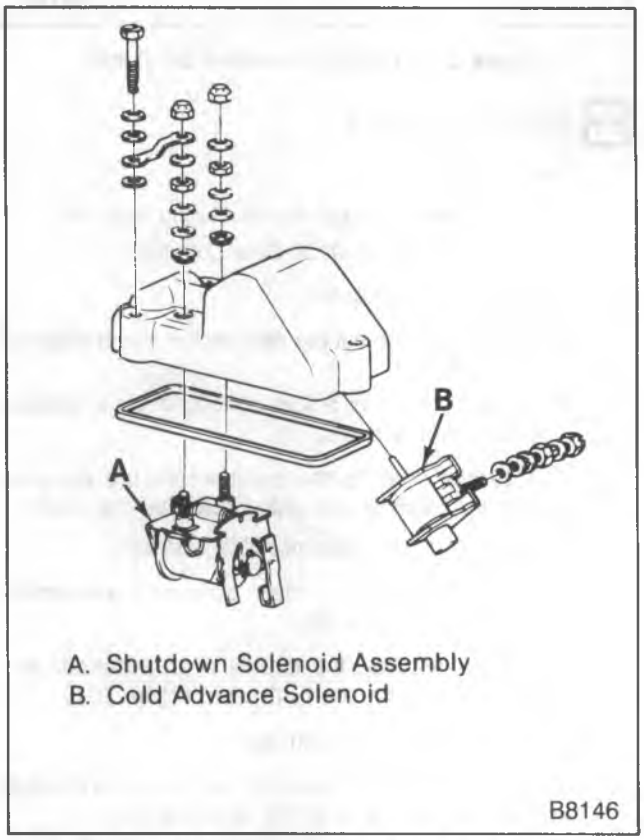

Figure 28 – Cold Advance and Shutdown Solenoids

SIDE COVER GASKET REPLACEMENT

Remove or Disconnect (Figure 29)

1. The two screws (40).
2. Cover (41).
3. Gasket (42).

Install or Connect (Figure 29)

1. Gasket (42).
2. Cover (41).
3. Screws (40).

Tighten

- Screws (40) to 2 N•m (18 in. lbs.).

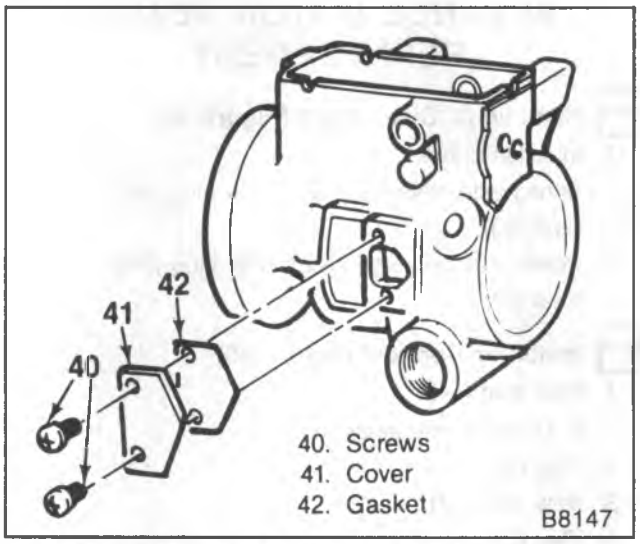

Figure 29—Side Housing and Drive Group

INJECTION PUMP OFF-VEHICLE SERVICE

Refer to "Injection Pump Replacement." Off-vehicle service operations require a leak test after the repair has been made. Refer to "Pressure Testing The Injection Pump."

ADVANCE PIN HOLE PLUG SEAL REPLACEMENT

Remove or Disconnect (Figure 30)

1. Injection pump.
2. Plug (50).
   - Tap the plug lightly with a hammer to loosen it.
3. Seal (51).

Install or Connect (Figure 27)

1. New seal.
   - Lubricate the seal.
2. Plug.

Tighten

- Plug to 10 N•m (90 in. lbs.).

3. Injection pump.

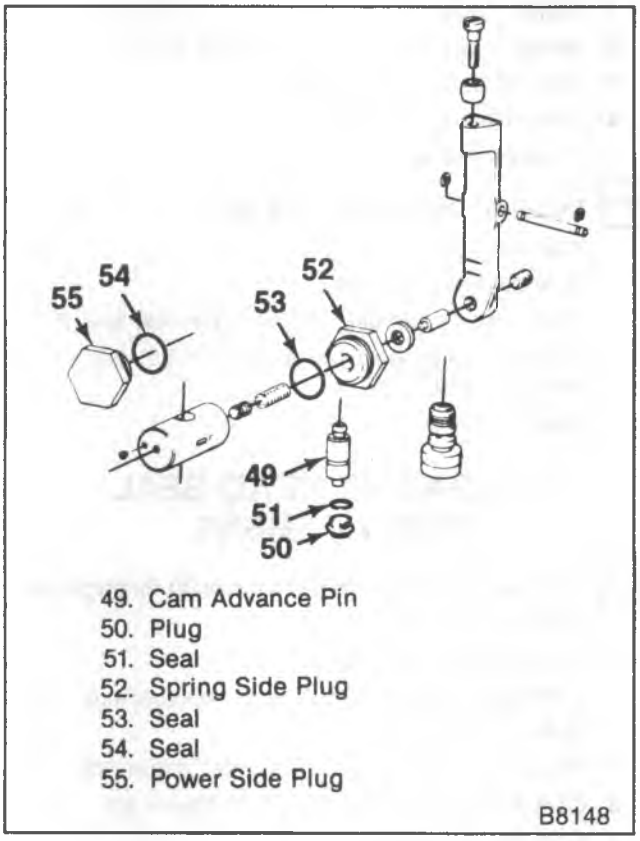

Figure 30—Advance Piston Group

ADVANCE PISTON SEALS REPLACEMENT

Remove or Disconnect (Figure 30)

1. Injection pump.
2. Spring side advance piston hole plug (52).
3. Seal (53).
4. Power side advance piston hole plug (55).
5. Seal (54).

Install or Connect (Figure 30)

1. New seal (54).
   - Lubricate the seal.
2. Plug (55).
3. New seal (53).
4. Plug (52).
5. Injection pump.

ADVANCE PISTON REPLACEMENT

Remove or Disconnect (Figure 30)

1. Injection pump.
2. Advance piston hold plugs (52 and 55).
3. Cam advance pin plug (50).
4. Cam advance pin (49).
5. Advance piston.

Install or Connect (Figure 30)

1. Advance piston.
2. Cam advance pin (49).
3. Cam advance pin plug (50) using a new seal (51).
4. Advance piston hold plugs (52 and 55) using new seals (54 and 53).
5. Injection pump.

HYDRAULIC HEAD SEAL REPLACEMENT

Remove or Disconnect (Figures 30 through 34)

1. Injection pump.
2. Throttle shaft and seals.
   - Refer to "Throttle Shaft Seal Replacement."
3. Metering valve (figure 31).
4. Housing vent wire screw assembly (figure 32).
5. Cam advance pin hold plug (50) (figure 30).
6. Seal from the plug.
7. Cam advance pin (49) (figure 30).
8. Head locking screws (figure 33).
   - Locate the pump assembly so the rear of the pump is sloping down.
9. Head locating screw and seal (figure 34).
10. Hydraulic head assembly using a twisting motion.
11. O-ring seal.

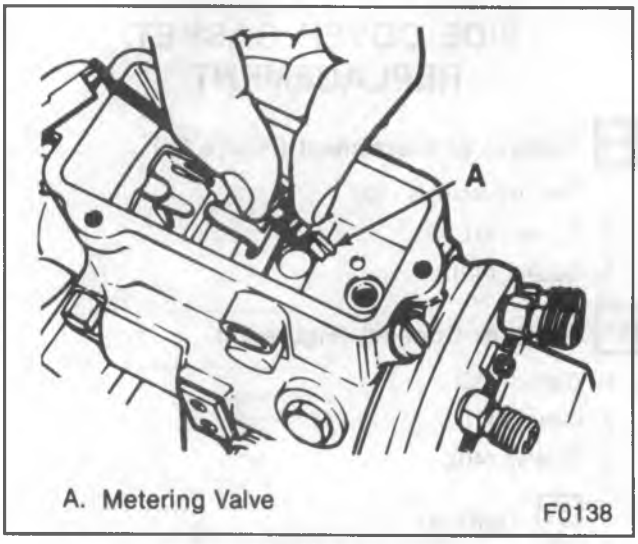

Figure 31—Metering Valve

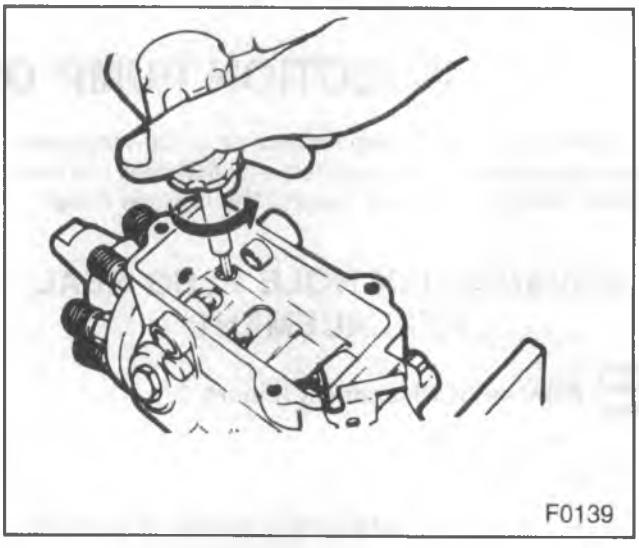

Figure 32—Vent Wire Assembly

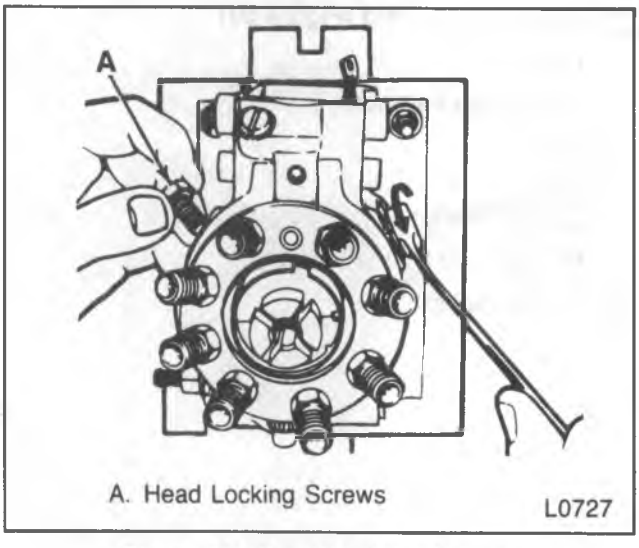

Figure 33—Head Locking Screws

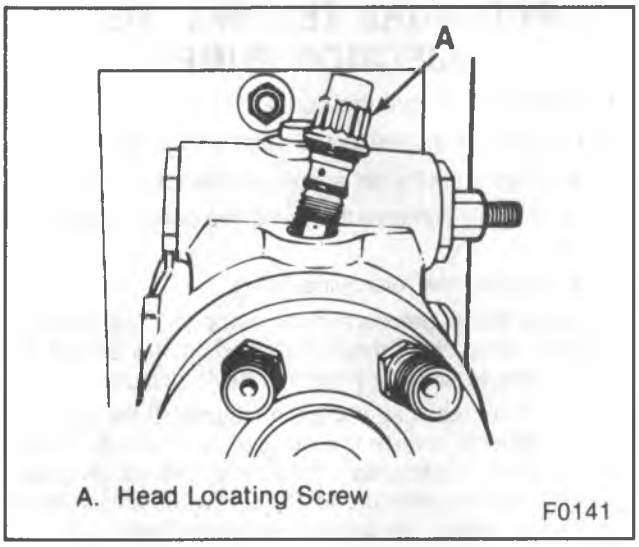

Figure 34—Head Locating Screw

Install or Connect

1. New O-ring seal to the hydraulic head.
   - Lubricate the seal.
2. Hydraulic head assembly into the pump housing.
3. Head locking screws loosely (figure 33).
   - Lubricate the screws.
4. New seal on the head locating screw.
5. Head locating screw (figure 30).
   - Turn the pump upside down.

   Tighten
   - Screw to 23 N•m (17 ft. lbs.).
6. The advance pin (49) (figure 30).
7. New seal on the advance pin hole plug.
   - Lubricate the seal.
8. The advance pin hold plug.

   Tighten
   - Plug to 10 N•m (90 in. lbs.).
9. Housing vent wire screw assembly (figure 32).
10. Metering valve (figure 31).
11. Throttle shaft and seals.
    - Refer to "Throttle Shaft Seal Replacement."
12. Injection pump.

DRIVE SHAFT SEAL REPLACEMENT

Remove or Disconnect (Figures 35 through 37)

Tool Required:

J 29692-B Holding Fixture

1. Injection pump.
2. Fast idle solenoid bracket.
   - Mount the pump in J 29692-B and tilt it (figure 35).
3. The drive shaft from the pump using a rotating motion (alignment pin at the top).
   - The shaft is retained by an O-ring.
   - Make sure that no pieces of the O-ring have broken off in the pump.
4. The drive shaft seals.

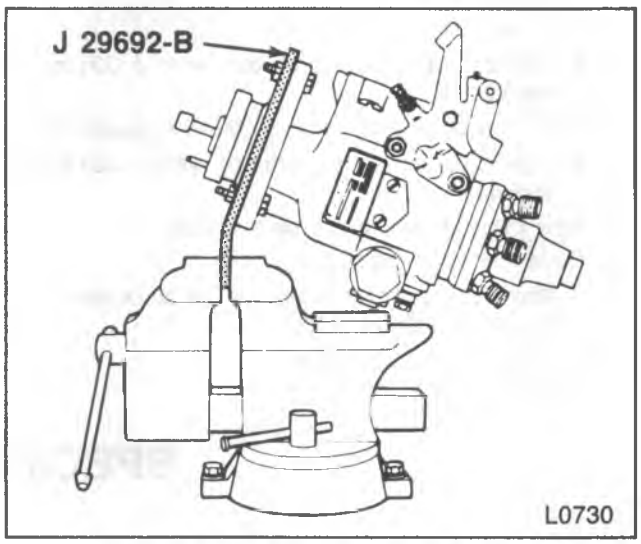

Figure 35—Pump Holding Bracket

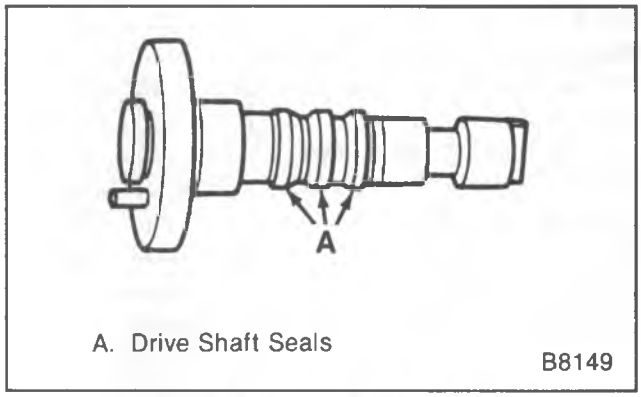

Figure 36—Drive Shaft Seals

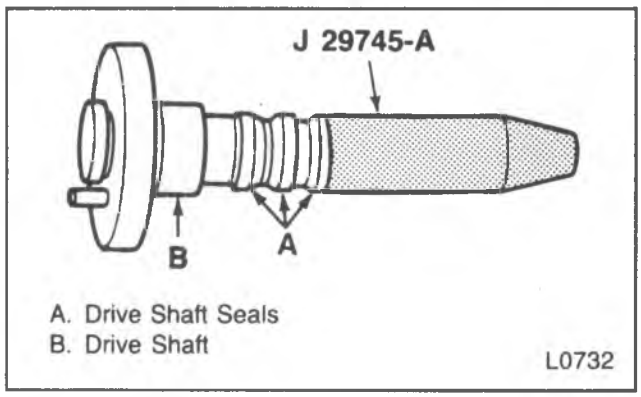

Figure 37—Drive Shaft Seal Protector

Install or Connect (Figures 35 through 37)

Tools Required:

J 29692-B Holding Fixture

J 29745-A Shaft Seal Protector

J 33198 Synkut Lubricating Oil

1. One black seal on the shaft using J 29745-A.
   - Lubricate the seal protector with J 33198 or equivalent.
2. The red seal using J 29745-A.
   - Lubricate the seal protector with J 33198 or equivalent.
3. The other black seal using J 29745-A (figure 37).
   - Lubricate the seal protector with J 33198 or equivalent.
4. New O-ring retaining clip on the shaft.
5. Drive shaft into the pump.
   - Make sure the drill points on the drive shaft end match up with the rotor.
6. Fast idle solenoid bracket.
7. Injection pump.

PRESSURE TESTING THE INJECTION PUMP

1. Drain all fuel from the pump.
2. Connect an air line to the pump inlet connection.
   - Make sure the air supply is clean and dry.
3. Completely immerse the pump in a bath of clean test oil.
   - Seal off the return line fitting.
4. Raise the air pressure in the pump to 137.9 kPa (20 psi). Keep the pump immersed in the oil for 10 minutes to allow any trapped air to escape.
5. Watch for leaks after the ten minutes. If the pump is not leaking, reduce the air pressure to 13.8 kPa (2 psi) for 30 seconds. If there is still no leakage, increase the pressure to 137.9 kPa (20 psi). If there are not leaks, the pump is ready for use.

SPECIFICATIONS

Fasteners	Torque N·m	Ft. Lbs.	In. Lbs.
Injection Line Fittings	25	20	—
Intake Manifold Bolts	40	30	—
Injection Pump Mounting Nuts	40	30	—
Injection Pump Drive Gear Bolts	25	20	—
Injection Nozzles	70	50	—
Injection Pump Cover Screws	3.7	—	33
Injection Pump Guide Stud	9.5	—	85
Solenoid Terminal Nuts	1.2	—	12
Side Cover Screws	2	—	18
Advance Pin Hole Plug	10	—	90
Head Locating Screw	23	17	—

T2233

SPECIAL TOOLS

1 J-26925

2 J-29601

3 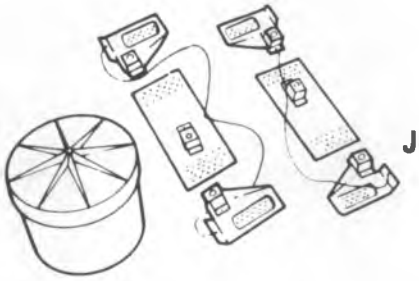 J-29664

4 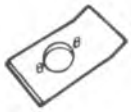 J-29692-B

5 J-29745-A

6 J 29873

7 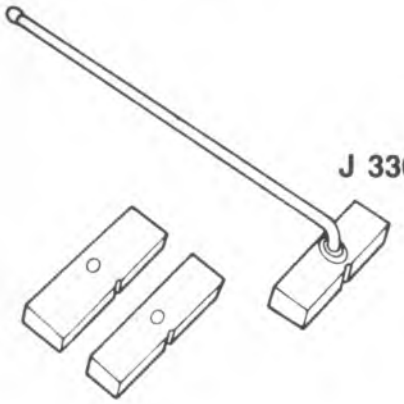 J 33043-A

8 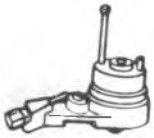 J-33042

9 J 33198

10 J 36142

1. Tachometer
2. Injection Pump Timing Adapter
3. Protective Covers
4. Holding Fixture
5. Shaft Seal Protector
6. Nozzle Socket
7. Vacuum Valve Gage Set
8. Static Timing Gage
9. Synkut Lubricating Oil
10. Switch Gage Tool

V0303

SECTION 6D

ENGINE ELECTRICAL

CONTENTS

SUBJECT	PAGE
Battery	6D1-1
Cranking System	6D2-1
Charging System	6D3-1
Ignition System	6D4-1
Engine Block Heaters	6D5-1
Diesel Glow Plug Electrical System	6D6-1
Engine Wiring	6D7-1

ELECTRICAL SYSTEM

Engine electrical system diagnosis includes the battery, charging system (generator and related wiring), cranking system (starter and related wiring), ignition system (distributor, spark plugs and wiring) and the glow plug system (diesel electrical).

Gas engine vehicles with throttle body injection (TBI) and the light duty diesel engine are equipped with an electronic computer command control system. These vehicles have a "Service Engine Soon" lamp on the instrument panel. Refer to the Fuel and Emissions Service Manual if you are using X-9132. Refer to the end of this manual if you are using ST330-91 for a detailed description of the lamp's operation and use as diagnostic indicator.

SECTION 6D1

BATTERY

NOTICE: When fasteners are removed, always reinstall them at the same location from which they were removed. If a fastener needs to be replaced, use the correct part number fastener for that application. If the correct part number fastener is not available, a fastener of equal size and strength (or stronger) may be used. Fasteners that are not reused, and those requiring thread locking compound will be called out. The correct torque value must be used when installing fasteners that require it. If the above conditions are not followed, parts or system damage could result.

CONTENTS

SUBJECT	PAGE
Description	6D1-2
General Information	6D1-2
Battery Storage	6D1-3
Diesel Batteries	6D1-3
Auxiliary Battery (Gas Engine Models)	6D1-4
Diagnosis	6D1-4
Visual Inspection	6D1-4
Hydrometer Test	6D1-4
Load Test	6D1-4
On-Vehicle Service	6D1-6
Battery Charging Procedures	6D1-6
Emergency Starting Due to a Discharged Battery	6D1-6
Current Drain Test	6D1-7
Battery Cables	6D1-8
Battery Replacement	6D1-8
Specifications	6D1-9
Special Tools	6D1-9

DESCRIPTION

GENERAL INFORMATION

The battery has three major functions in the electrical system: first, it provides a source of energy for cranking the engine; second, it acts as a voltage stabilizer for the electrical system; and third, it can, for a limited time, provide energy when the electrical load used exceeds the output of the generator.

The sealed battery as shown in figure 1 is standard. Water never needs to be added. There are no filler caps in the cover. The battery is sealed, except for small vent holes in the cover. The vents allow the escape of whatever small amount of gases that are produced in the battery. The special chemical composition inside the battery reduces gassing to a minimal amount at normal charging voltages. Besides reducing gassing, the special chemistry greatly reduces the possiblity of overcharge damage.

Keep the battery in an upright position to prevent electrolyte leakage. Tipping the battery beyond a 45 degree angle in any direction can allow a small amount of electrolyte to leak out the vent hole.

Do not exceed this 45 degree angle when carrying or installing the battery.

Evidence of electrolyte leakage does not always mean the battery is defective.

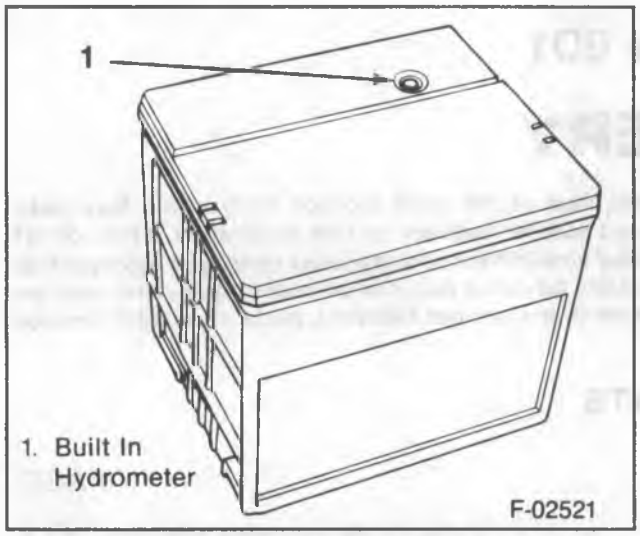

Figure 1—Sealed Battery with Side Terminals

RATINGS

Batteries are rated according to their reserve capacity in minutes and their cold cranking power in amperes. Both methods involve measuring the battery terminal voltage after a specified time period and discharge current.

The "reserve capacity" is defined as the maximum length of time it is possible to travel at night with minimum electrical load and no generator output. Expressed in minutes, it is the time required for a fully charged 12-volt battery, at a temperature of 27°C (80°F), being discharged at a constant current of 25 amperes, to reach a terminal voltage of 10.5 volts.

The "cold cranking ampere" (CCA) test measures the amperage delivered by the battery at -18°C (0°F) for 30 seconds.

Refer to "Specifications" at the end of this section for battery ratings.

BUILT-IN HYDROMETER

The sealed battery has a special temperature compensated hydrometer built into the cover to show at a glance the battery's state-of-charge. The hydrometer has a green ball within a cage which is attached to a clear plastic rod. The green ball will float at a predetermined specific gravity of the electrolyte. When the green ball floats, it rises within the cage and positions itself under the rod. Visually, a green dot then shows in the center of the hydrometer (figure 2). The built-in hydrometer provides a guide for battery testing and charging.

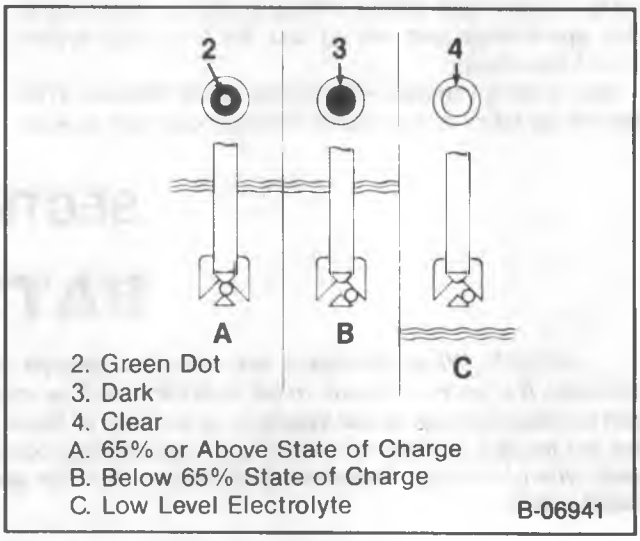

Figure 2—Built-In Hydrometer

When looking at the hydrometer window, make sure that the battery has a clean top. A lamp may be needed in some poorly-lit areas.

1. GREEN DOT VISIBLE: The state of charge is 65 percent or more of the full charge.
2. DARK; GREEN DOT NOT VISIBLE: The state of charge is below 65 percent. Charge the battery until the green dot appears. (Shake the battery slightly to make the green dot appear after charging).
3. CLEAR OR LIGHT YELLOW: The fluid level has dropped below the bottom of the hydrometer. This can be caused by a broken case, tipping of the battery, normal wearout, or overcharging because of a problem in the electrical system. Check the system and replace the battery.

COMMON CAUSES OF MALFUNCTION

If testing shows the battery to be in good condition but the battery doesn't perform satisfactorily, check for the following:

1. Vehicle accessories left on overnight.
2. Extended slow-speed driving with many accessories turned on.
3. The vehicle electrical load is more than the generator output, particularly with the addition of aftermarket equipment.
4. Problems in the charging system such as shorts, slipping fan belt, or worn generator or regulator parts.
5. Loose or poor battery cable-to-post connections, previous improper charging of a rundown battery, or loose hold-downs.
6. High-resistance connections in the cranking system.
7. Electronic devices draining the battery when the vehicle is parked for a long period of time. Disconnect the negative cable if the vehicle will be stored for more than 30 days.

Electrolyte Freezing

The freezing point of electrolyte depends on its specific gravity. Since freezing may ruin a battery, protect it against freezing by keeping it in a charged condition.

Carrier and Hold-Down

The carrier and hold-down should be clean and free from corrosion before battery installation.

The carrier should be in a sound mechanical condition so that it will support the battery securely and keep it level. Make certain there are no foreign objects in the carrier before installation.

To prevent the battery from shaking in its carrier, tighten the hold-down bolts. However, do not tighten the bolts to where the battery case or cover is placed under a severe strain.

BATTERY STORAGE

If the vehicle is going to be stored for up to 30 days, both battery cables should be disconnected. Check the battery state of charge and recharge if necessary. Check the battery at regular intervals and bring it to full charge to prevent deterioration. In cold climates this is necessary to prevent freezing.

If the vehicle is going to be stored for longer than 30 days, remove the battery and store it in a cool dry place. Periodically check the charge and recharge as necessary to prevent deterioration of the battery.

DIESEL BATTERIES

Vehicles with a diesel engine have two batteries wired in parallel with each other (figure 3 and 4). The batteries are located in the left front and the right front of the engine compartment.

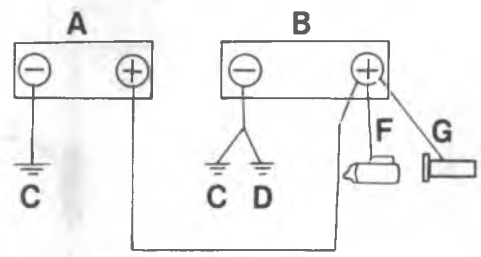

A. Left Battery
B. Right Battery
C. Engine Ground
D. Body Ground
E. Cable from Left Battery to Right Battery
F. Cable to Starter Motor
G. Cable to Generator

F7172

Figure 3—Diesel Battery Schematic (R/V)

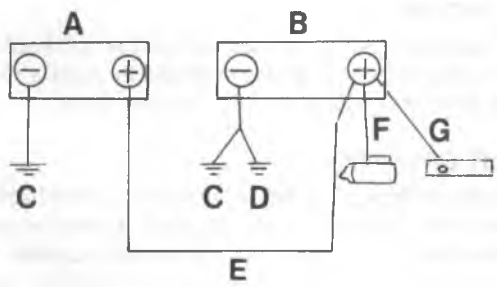

A. Left Battery
B. Right Battery
C. Engine Ground
D. Body Ground
E. Cable from Left Battery to Right Battery
F. Cable to Starter Motor
G. Cable to Battery Junction Block

F-05228

Figure 4—Diesel Battery Schematic (P)

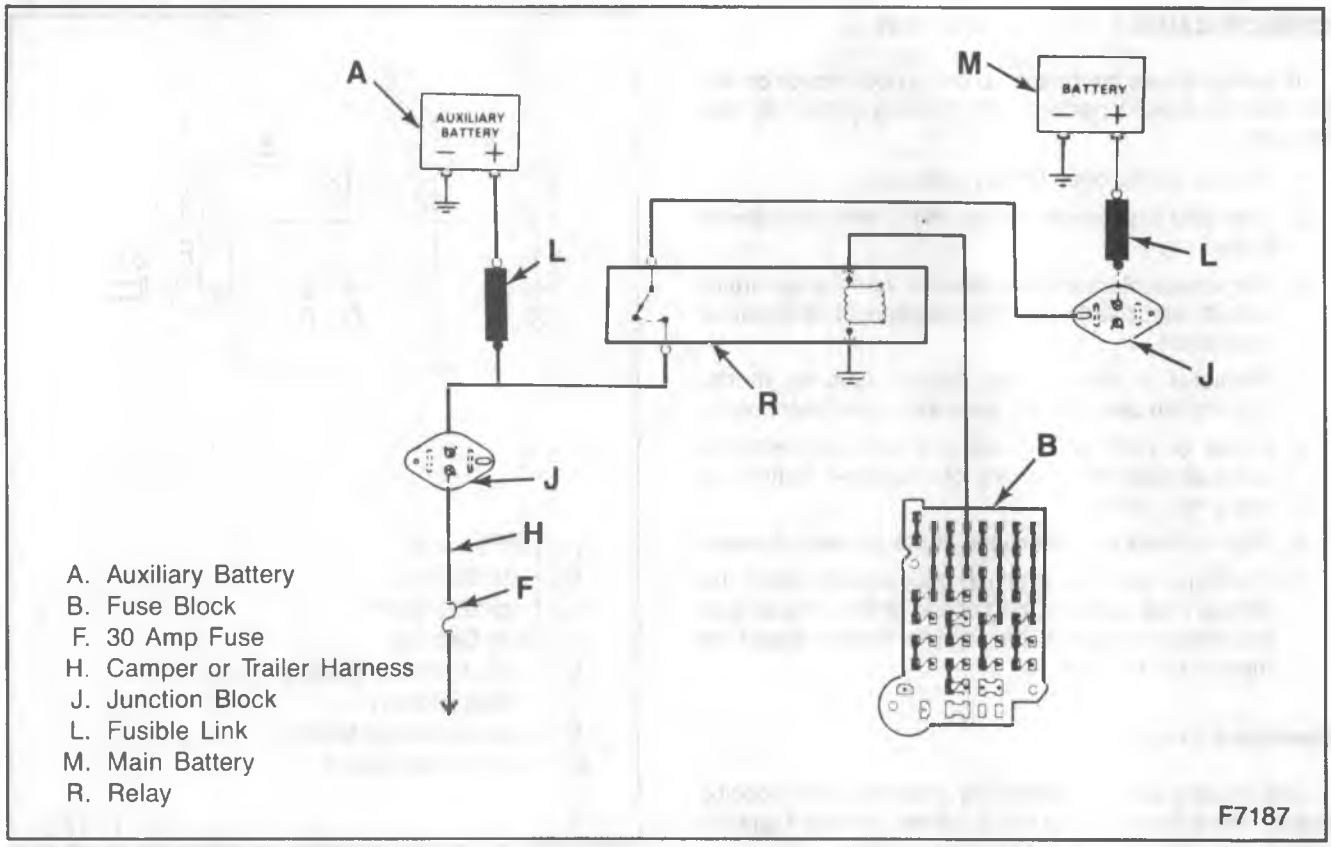

Figure 5—Auxiliary Battery Circuit (R/V)

AUXILIARY BATTERY (GAS ENGINE MODELS)

DESCRIPTION

The auxiliary battery is mounted in the left front of the engine compartment and is connected through a relay on the left wheelwell to the battery junction block.

CIRCUIT OPERATION

Circuit operation is shown in figure 5. Constant voltage is supplied from the main battery through a junction block to the relay contact. Constant voltage is also supplied by the auxiliary battery to the relay and to the camper harness junction block. When the engine control switch is turned to the RUN position, battery current flows through the "ACC" circuit and 15 amp radio fuse in the fuse block and across the coil in the relay. The relay engergizes and the contacts close. The auxiliary battery can now be charged by the vehicle's charging system.

If current is not reaching the trailer or camper harness, check the following:

1. Auxiliary battery.
2. Battery ground wire.
3. Radio fuse by operating the radio with the engine running.
4. Fusible links in the battery to relay wires.

DIAGNOSIS

In a diesel-equipped vehicle, check and test each battery separately.

VISUAL INSPECTION

Check for obvious damage such as a cracked or broken case or cover that could permit loss of electrolyte. If damaged, replace the battery. Determine the cause of the damage and correct.

HYDROMETER TEST

GREEN DOT VISIBLE: If the hydrometer has a GREEN DOT visible the battery is ready for testing. Proceed to "Load Test."

DARK; GREEN DOT NOT VISIBLE: Charge the battery. Refer to "Battery Charging Procedure" later in this section.

LIGHT OR BRIGHT INDICATOR: Do not charge, test, or jump start the battery. Replace the battery.

LOAD TEST

Tool Required:

ST 1201 Battery Terminal Adapters

If the battery is in the vehicle, make sure the engine control switch is off. If there is more than one battery, check each separately.

1. Disconnect the battery cables from the terminal.
2. Install adapter AC-Delco ST 1201 or equivalent (figure 6).

Side Terminal Batteries:

3. If adapters are not available, use a 3/8-inch 16 UNC bolt and stainless steel nut (figure 7). Finger tighten. Contact must be made through the lead pads at the face of the terminals, not through the threads of the bolt.

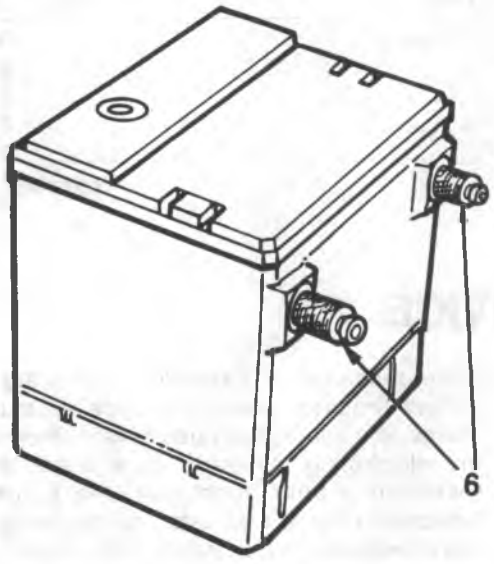

6. Adapter charging tool attached to terminals.

F-06505

Figure 6—Testing and Charging Terminal Adapter

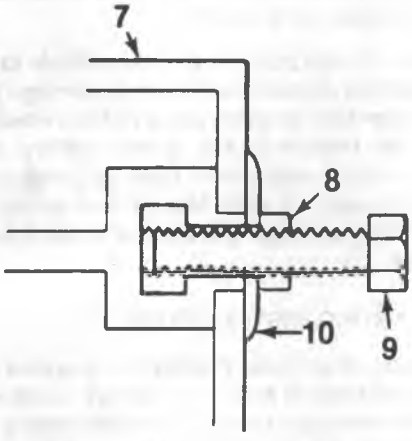

7. Case
8. 3/8-inch 16 UNC Nut
9. 3/8-inch 16 UNC Bolt
10. Electrical Contact

F-09715

Figure 7—Testing and Charging Using Bolt and Nut

Top Termina

4. Atta
equiv

17. Alligator C
18. Lead Pad
19. Hex Nut

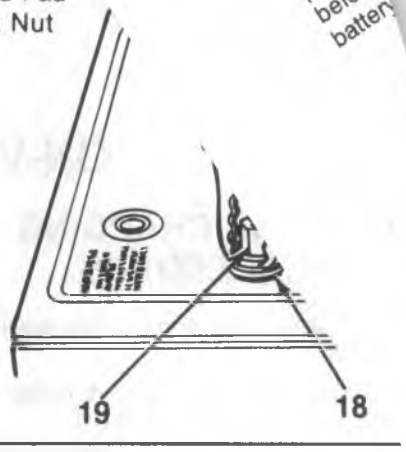

Figure 8—Testing and Charging, Using Top Adapter

5. Attach the alligator clamps of the tester or char between the terminal nuts and the lead pads of th terminal studs.
   - If the tester clamps cannot be attached between the nuts and the lead pads of the terminals, the ampere load for the load test may change. Refer to "Specifications" at the end of this section.
6. Install a voltmeter and battery load tester to the adapters.
7. Remove the surface charge from recently charged batteries by applying a 300-ampere load across the adapters for 15 seconds.
8. Do not remove the surface charge from batteries which have been in storage.
9. Turn the load off and wait 15 seconds for the battery to recover.
10. Apply the specified load selected from the chart in "Specifications." Observe the battery voltage after 15 seconds with the load connected, then turn off the load.

y voltage does not drop below the oltage as shown in the "Voltage and e Chart" following, the battery is good and e returned to service. (The battery re must be estimated by feel and by the ure the battery has been exposed to for the g few hours). If the battery voltage drops the minimum voltage listed, replace the .

Voltage And Temperature Chart

TEMPERATURE	MINIMUM VOLTAGE
21°C (70°F & Above)	9.6
10°C (50°F)	9.4
-1°C (30°F)	9.1
-10°C (15°F)	8.8
-18°C (0°F)	8.5

GMTB-4037-A

ON-VEHICLE SERVICE

BATTERY CHARGING PROCEDURES

The following basic rules apply to any sealed battery arging situation:

1. Do not charge a battery if the hydrometer is clear or light yellow — replace the battery.
2. Charge rates between 3 and 50 amperes are satisfactory as long as spewing of electrolyte through the vents does not occur or the battery does not feel over 52°C (125°F). If spewing occurs or temperature exceeds 52°C (125°F), the charging rate must be reduced or temporarily halted to permit cooling.

- Estimate battery temperature by touching or feeling the battery case.

3. The battery is sufficiently charged when the green dot in the built-in hydrometer is visible. No further charging is required. Shake or tilt the battery at hourly intervals during charging to mix the electrolyte and see if the green dot appears.
4. Battery charging involves applying a charge current (in amperes) for a period of time (in hours). Thus, a 25-ampere charging rate for 2 hours would be 50 ampere-hour charge to the battery. In most cases, batteries whose load test values are less than 200 amperes will have the green dot visible after at least a 50 ampere-hour charge. Most batteries whose load test values are greater than 200 amperes will have the green dot visible after at least a 75 ampere-hour charge. In the event that the green dot does not appear after this amount of charging, continue charging for another 50 or 75 ampere-hours. If the green dot still does not appear, replace the battery.
5. The time required for a charge will vary according to:
   a. Size of battery — Example: A discharged large heavy-duty battery requires more than twice the recharging of a discharged small passenger car battery.
   b. Temperature — Example: A longer time will be needed to charge any battery at -18°C (0°F) than at 27°C (80°F). When a fast charger is connected to a cold battery, the current accepted by the battery will be very low at first; then, as the battery warms, it will accept a higher rate.
   c. State-of-charge — Example: A discharged battery requires more than twice as much charge as a one-half-charged battery. Because the electrolyte is nearly pure water and therefore a poor conductor, the current accepted is low at first. Later, as the charging current causes the elctrolyte acid content to increase, the charging current will likewise increase.
   d. Charger Capacity — Example: A charger which can supply only 5 amperes will require a much longer period of charging than a charger that can supply 30 amperes or more.

EMERGENCY STARTING DUE TO A DISCHARGED BATTERY

If the vehicle will not start due to a discharged battery, it can be started by using energy from another battery — a procedure called "jump starting."

NOTICE: Do not push or tow the vehicle to start it. Under some conditions this may damage the catalytic converter or other parts of the vehicle. Also, since this vehicle has a 12 volt battery, be sure the vehicle or equipment used to jump start the engine is also 12 volt. Use of any other type of system may damage the vehicle's electrical components.

JUMP STARTING INSTRUCTIONS

CAUTION: Batteries produce explosive gases, contain corrosive acid, and supply levels of electrical current high enough to cause burns. Therefore, to reduce the risk of personal injury when working near a battery:

- **Always shield your eyes and avoid leaning over the battery whenever possible.**
- **Do not expose the battery to open flames or sparks.**
- **Do not allow battery acid to contact the eyes or skin. Flush any contacted areas with water immediately and thoroughly, and get medical help.**
- **Follow each step in the jump starting instructions.**

Should your vehicle have an optional diesel engine or an auxiliary battery option use only the battery on the passenger side of the engine compartment when jump starting.

1. Position the vehicle with the good (charged) battery so that the booster (jumper) cables will reach, but never let the vehicles touch. Also, be sure booster cables do not have loose or missing insulation.
2. In vehicle:
   - Turn off the ignition and all lamps and accessories except the hazard flasher or any lamps needed for the work area.
   - Apply the parking brake firmly, and shift the automatic transmission to Park (or manual transmission to Neutral).
3. Making sure the cable clamps do not touch any other metal parts, clamp one end of the first booster cable to the positive (+) terminal on one battery (figure 9), and the other end to the positive terminal on the other battery. Never connect (+) to (-).
4. Clamp one end of the second cable to the negative (-) terminal of the good (charged) battery and make the final connection to a heavy metal bracket such as the mounting bracket of the generator or air conditioner compressor (if so equipped) on the engine about 450 millimeters (18 inches) from the discharged battery. Make sure the cables are not on or near pulleys, fans, or other parts that will move when the engine is started.
5. Start the engine of the vehicle with the good (charged) battery and run the engine at a moderate speed for several minutes. Then, start the engine of the vehicle that has the discharged battery.
6. Remove the booster cables by reversing the above installation sequence exactly. While removing each clamp, take care it does not touch any other metal while the other end remains attached.

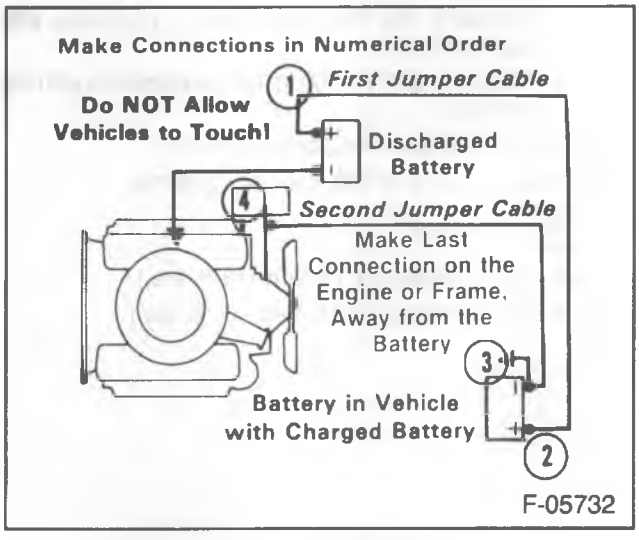

Figure 9—Jump Starting Connection

CURRENT DRAIN TEST

If a battery needs recharging and no cause is evident, check the vehicle for excessive current drain.

Remove or Disconnect

- Negative battery cable (both negative cables on diesels).

Install or Connect

Tool Required:

J 34029-A Digital Multimeter

1. Battery side terminal adapter in the negative terminal, or nut and bolt. Refer to "Battery" in this section.
2. A 3/8-inch 16 UNC nut on the negative battery cable terminal attaching screw.
3. Clip of a jumper wire to the negative battery terminal adapter (figure 10).

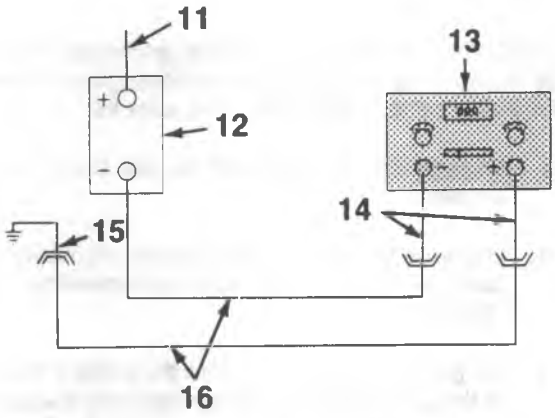

11. Positive Battery Cable Connected
12. Battery (Disconnect Negative Cable From Other Battery On Diesel Vehicles)
13. Multimeter J 34029-A Equivalent Set On DC, MA and 2000 Scale
14. Meter Test Leads
15. End of Negative Battery Cable
16. Jumper Wires

L00465

Figure 10—Battery Drain Test Circuit

4. Clip at the other end of the jumper wire to digital multimeter J 34029-A or equivalent.
5. Clip from the second jumper wire to the end of the negative battery cable.
6. Clip at the other end of the wire to the multimeter.
   - Set the multimeter on the DC, MA and 2000 scale.
   - Take the reading with the engine control switch and all accessories off.

7. Find the reserve capacity of the battery in "Specifications" at the end of this section. Divide this number by 4. Compare this to the multimeter reading. The current drain reading should not exceed this number. (Example: If a battery has a reserve capacity of 100 minutes, the current drain should not exceed 25 milliamps.)

   If the vehicle has a diesel engine with two batteries, add the reserve capacities together and divide this total by 4.

   If a vehicle is equipped with an auxiliary battery, use only the reserve capacity of the main battery.

8. If current draw is too high, check the system for causes such as a shorted wire or a compartment lamp that does not shut off when it should.

BATTERY CABLES

Excessive resistance caused by poor terminal connections and partial short circuits through worn cable insulation will result in an abnormal voltage drop in the starter cable. Low voltage in the starter will prevent normal starter operation and cause hard starting.

CAUTION: To prevent possible personal injury from a moving vehicle or operating engine, do the following before performing the checks:

1. **Engage the parking brakes and block the wheels.**
2. **Place the manual transmission in the neutral position or the automatic transmission in "PARK."**
3. **On gas engines disconnect the battery feed at the distributor. On diesel engines disconnect the battery feed at the engine shutdown (ESO) solenoid.**

1. Check the voltage drop between ground (negative battery terminal) and the vehicle frame. Place one prod of the test voltmeter on the grounded battery post (not on the cable clamp) and the other on the frame. Operate the starter and note the voltage reading.
2. Check the voltage drop between the positive battery terminal and starter terminal stud with the starter operating.
3. Check the voltage drop between the starter housing and frame with the starter operating.
4. If the voltage drop in any of the above is more than 1.0 volt, there is excessive resistance in the circuit. To eliminate resistance, the cables should be disconnected and connections cleaned. If cables are frayed or corroded, the cables should be replaced. When selecting new cables, be sure they are at least as large as the ones being replaced.

BATTERY REPLACEMENT

When handling a battery, observe the following safety precautions:

1. Hydrogen gas is produced by the battery. A flame or spark near the battery may cause the gas to ignite.
2. Battery fluid is highly acidic. Avoid spilling on clothing or skin. Any spilled electrolyte should be flushed with large quantities of water and cleaned immediately.

Remove or Disconnect

1. Negative cable from the negative battery terminal.
2. Positive cable from the positive battery terminal.
3. Battery hold-down clamp.
4. Battery.

Inspect

- Battery for damage.
- Cables and connectors.
- Carrier for damage or foreign objects.
  - If damage is noted, find and correct the cause.

Install or Connect

Notice: For steps 3 and 5 see "Notice" on page 6D1-1 of this section.

1. Battery into cleaned carrier.
2. Hold-down retainer or top bar, as equipped.

   Tighten

   - Retainer to 17 N•m (13 ft. lbs.).
   - Top bar to 3.5 N•m (30 in. lbs.) on batteries with side terminals.
   - Top bar to 6.8 N•m (60 in. lbs.) on batteries with top terminals.
3. Positive cable to the positive terminal.
4. Negative cable to the negative terminal.

   Tighten

   - Top terminals to 17 N•m (13 ft. lbs.).
   - Side terminals to 15 N•m (11 ft. lbs.).

SPECIFICATIONS

BATTERY SPECIFICATIONS

Part No.	Application	Catalog Number	Catalog Replacement Number	Volts	Cold Cranking Amperes Rating @ −18°C (0°F)	Reserve Capacity (Minutes at 25 Amps)	Load Test (Amperes)
1980337	P	1200	1200	12	550	130	270
1980474	P	1110	1110	12	750	160	375*
1981735	P	735	78A-60	12	730	115	260
1981730	P	730	75-60	12	525	90	260
1981733	RV, P	733	78-60	12	540	115	270
1981734	RV, P	734	78A-72	12	630	115	310

*Battery tester cable clamps should be between terminal nuts and lead pads of terminals. If not possible, load value should be 275 amperes.

TB-3112-2A

FASTENER TORQUE

	N·m	Ft. Lbs.	In. Lbs.
Battery Retainer	17	13	
Top Bar of Hold-Down:			
Side Terminal Batteries	3.5		30
Top Terminal Batteries	6.8		60
Battery Terminals:			
Top Terminals	17	13	
Side Terminals	15	11	

TB-3119-2A

PARTS INFORMATION

PART NAME	GROUP
Battery Cable (Pos.)	2.342
Battery Cable (Neg.)	2.341
Battery Tray & Support	2.333

GMTB-3146-2A

SPECIAL TOOLS

1 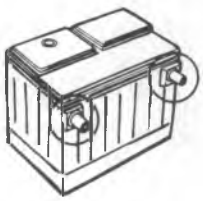

ST 1201

2

J-34029-A

1. Battery Terminal Adapters
2. Multimeter
3. A/C Delco Top Terminal Nuts

3

V0392

SECTION 6D2

CRANKING SYSTEM

NOTICE: When fasteners are removed, always reinstall them at the same location from which they were removed. If a fastener needs to be replaced, use the correct part number fastener for that application. If the correct part number fastener is not available, a fastener of equal size and strength (or stronger) may be used. Fasteners that are not reused, and those requiring thread locking compound will be called out. The correct torque value must be used when installing fasteners that require it. If the above conditions are not followed, parts or system damage could result.

CONTENTS

SUBJECT	PAGE
Description	6D2- 1
Cranking Circuit	6D2- 1
Starter Motor	6D2- 1
Diagnosis	6D2- 4
Cranking Circuit	6D2- 4
Starter Motor Noise	6D2- 4
Diagnosis of Starter Motor Noise	6D2- 9
On-Vehicle Service	6D2- 9
Maintenance	6D2- 9
Starter Motor	6D2- 9
Starter Motor Replacement	6D2- 9
Specifications	6D2-10

DESCRIPTION

CRANKING CIRCUIT

The basic cranking circuit consists of the battery, starter motor, engine control switch, neutral start switch (manual transmission), and related electrical wiring (figure 1).

STARTER MOTOR

Three kinds of starting motors are used on these engines.

The SD-260 and the SD-300 are straight drive starters with the pinion driven directly by the armature shaft. They have pole pieces arranged around the armature that are energized by wound field coils (figures 2 and 3). This type is used on gas engines.

The 28MT, used on the 6.2L diesel engine, uses a gear reduction system to drive the pinion. This starter is serviceable by complete replacement only (figure 4).

Both have the shift lever mechanism and the solenoid plunger enclosed in the drive housing to protect them from exposure to dirt, icing conditions and splash.

In the basic circuit (figure 1), the solenoid windings are energized when the switch is closed (in the "START" position). The resulting plunger and shift lever movement causes the pinion to mesh with the engine flywheel ring gear, the solenoid main contacts to close, and engine cranking to take place. When the engine starts, pinion overrun protects the armature from excessive speed until the switch is opened, at which time the return spring causes the pinion to disengage. To prevent excessive overrun, open the engine control switch (release from the START position) immediately when the engine starts.

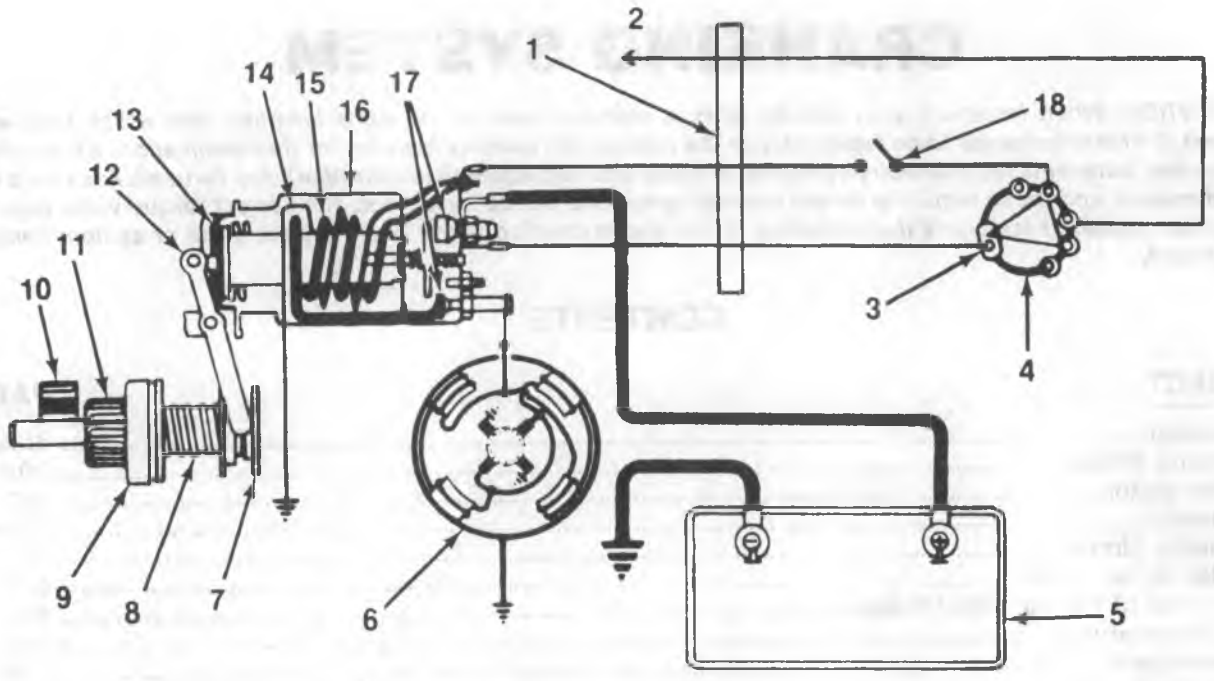

1. Bulkhead Connector
2. To Distributor "BAT" Terminal
3. BAT
4. Engine Control Switch
5. Battery
6. Starter Motor
7. Shift Collar
8. Pinion Compression Spring
9. Clutch
10. Flywheel
11. Pinion
12. Shift Lever
13. Plunger
14. Hold In Coil
15. Pull In Coil
16. Solenoid
17. Solenoid Switch Contacts
18. Neutral Start Switch

F5451

Figure 1—Cranking Circuit

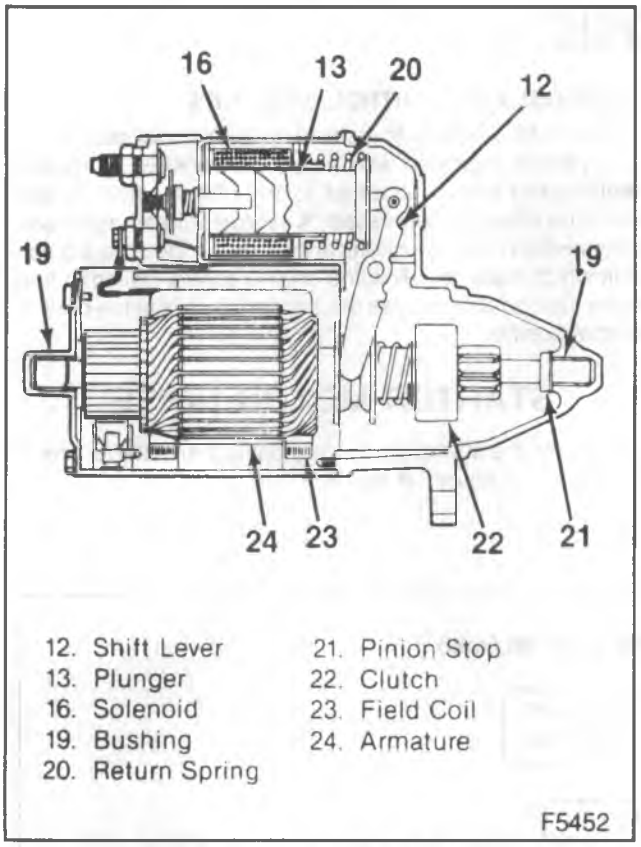

Figure 2—SD-260 Starting Motor

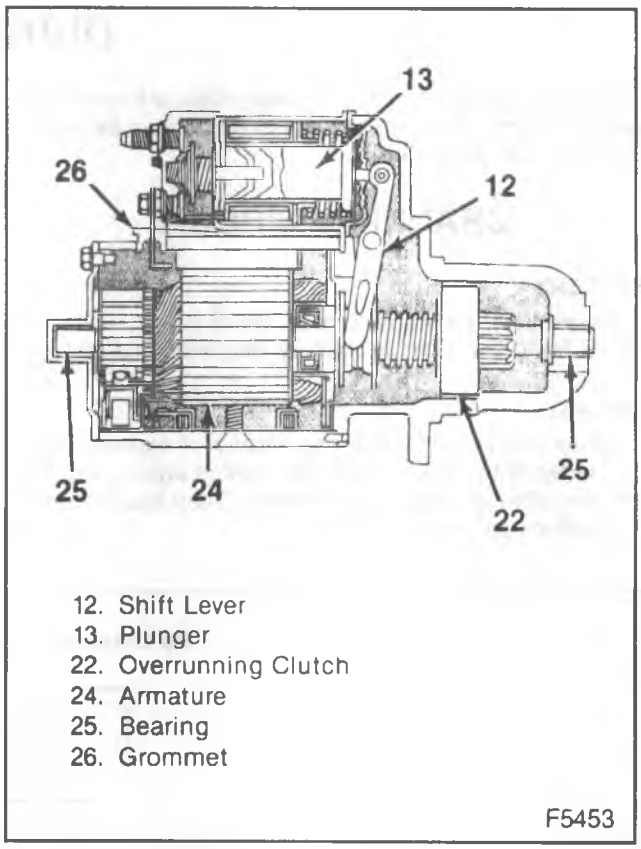

Figure 3—SD-300 Starting Motor

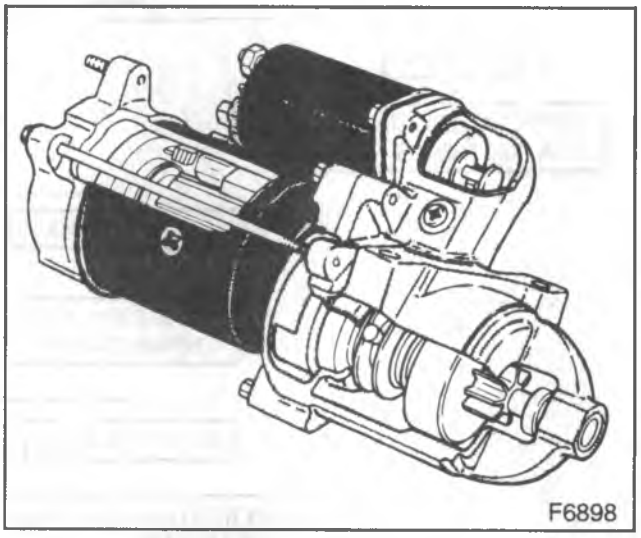

Figure 4—28MT Starting Motor

DIAGNOSIS

Refer to figures 5, 6 and 7 for a diagnosis of the cranking system. Before removing any unit in the system for repair, make the following checks.

CRANKING CIRCUIT

BATTERY

Determine the condition of the battery. Refer to BATTERY (SEC. 6D1) for battery diagnosis and testing.

WIRING

Inspect the circuit for damage. Inspect all connections to the starter motor, solenoid, engine control switch, and battery, including all ground connections. Clean and tighten all connections as required.

SOLENOID AND CONTROL SWITCHES

Check all switches to determine their condition.

A vehicle equipped with a manual transmission has a neutral start switch attached to the clutch which closes when the clutch is depressed. A vehicle with an automatic transmission has a mechanical interlock in the steering column which does not allow the engine control switch to turn to the start position unless the transmission is in the park or neutral position.

STARTER MOTOR NOISE

Refer to the starter noise diagnostic chart. Starter shims are shown in figures 8 and 9.

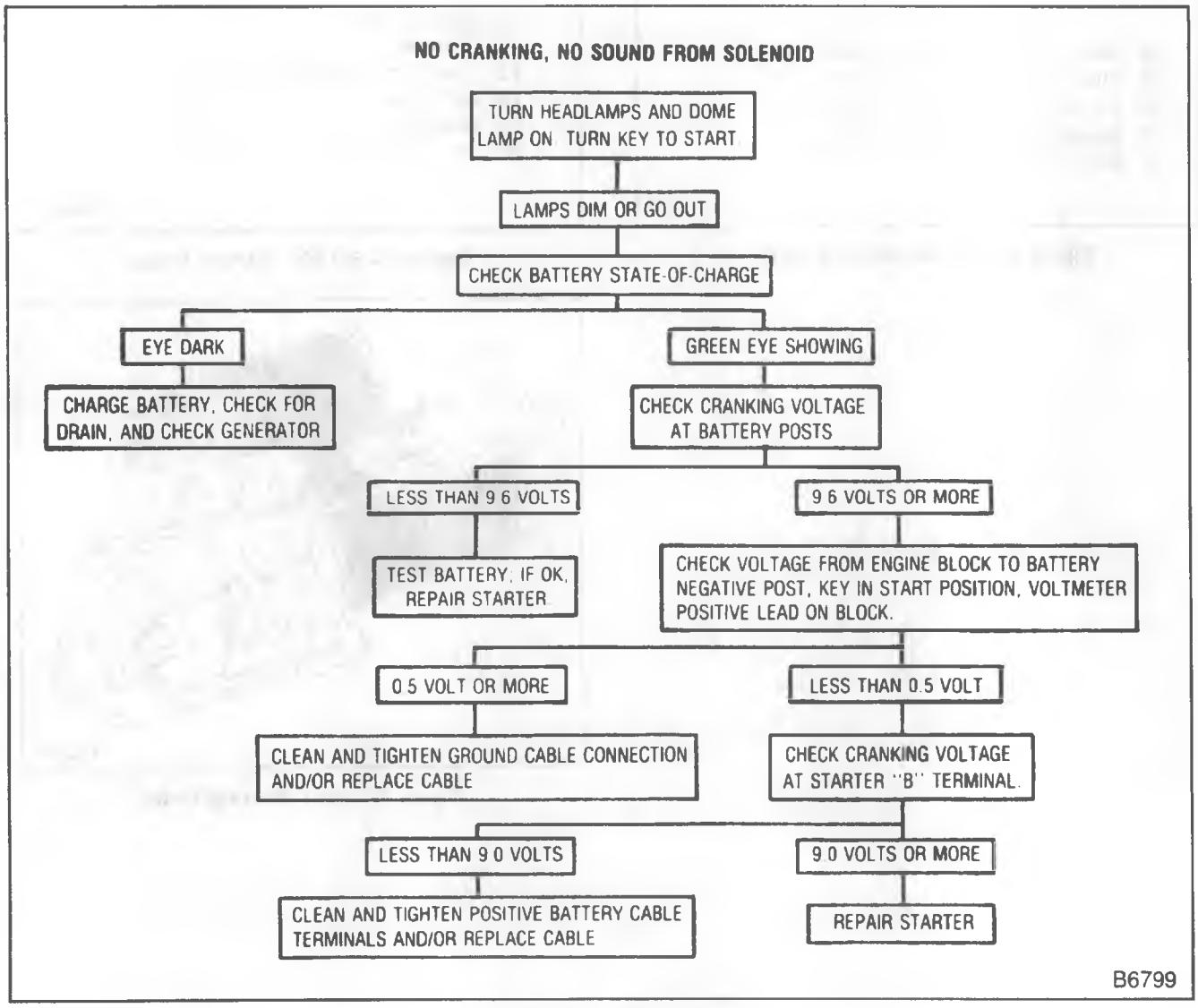

Figure 5—Cranking System Diagnosis

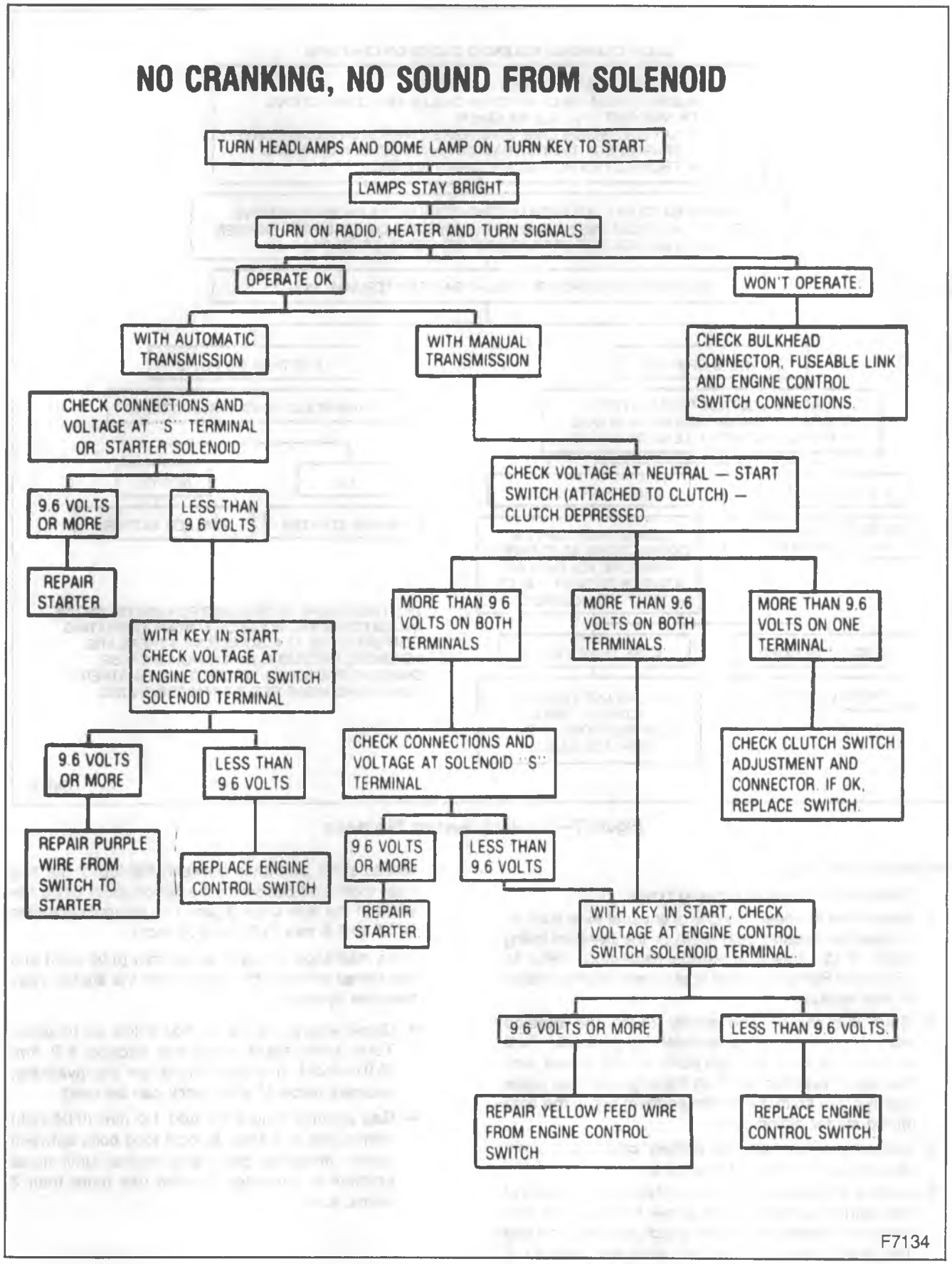

Figure 6—Cranking System Diagnosis

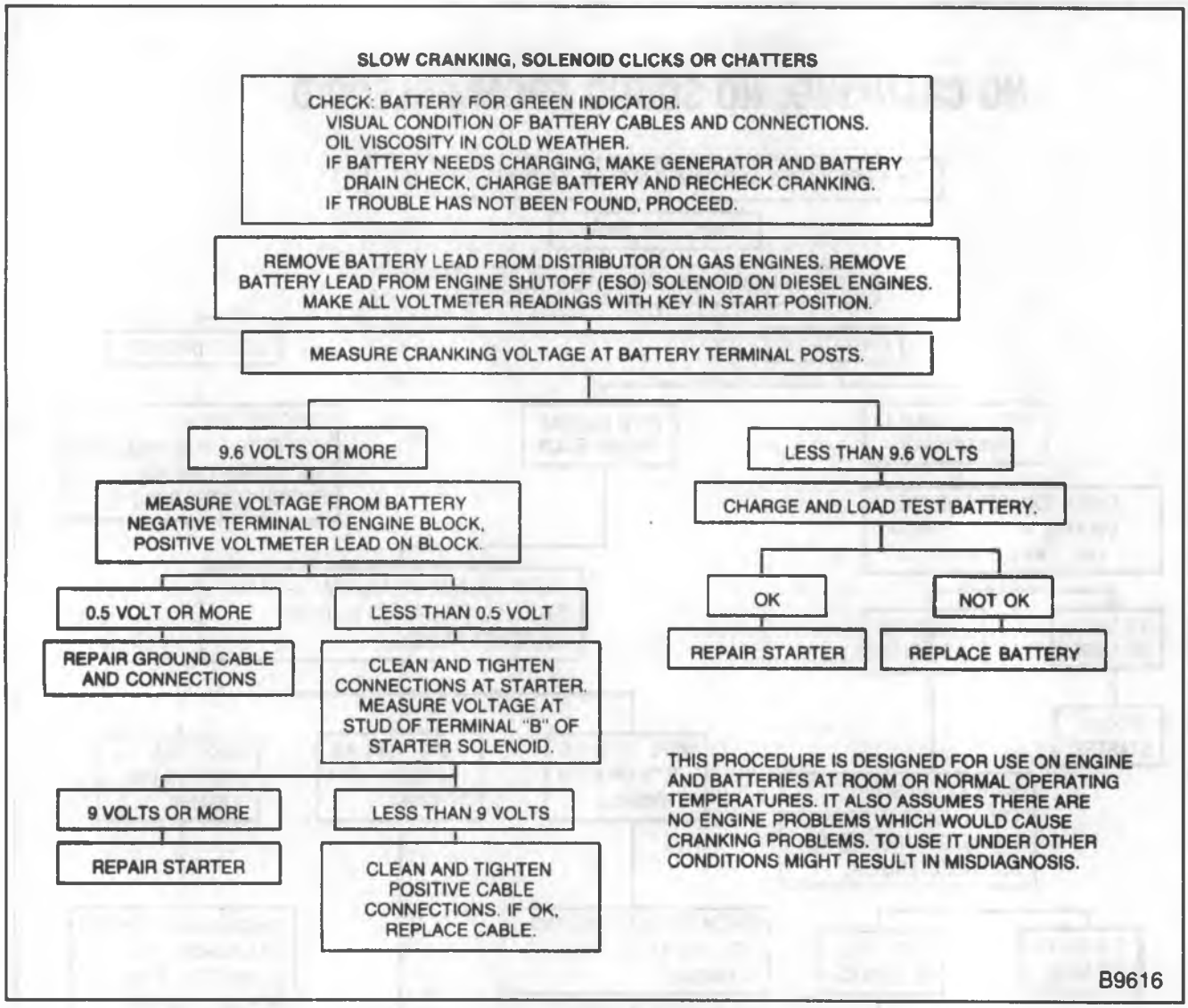

Figure 7—Cranking System Diagnosis

PINION CLEARANCE

1. Remove the flywheel housing cover.
2. Inspect the flywheel for signs of unusual wear such as chipped or missing gear teeth or the flywheel being bent. If the flywheel needs replacing, refer to "Flywheel Removal" in the appropriate engine section of this manual.
3. Start the engine and gently touch the outside diameter of the rotating flywheel ring gear with chalk or crayon to show the high point of tooth runout after the engine is turned off. Turn the engine off and rotate the flywheel so that the marked teeth are in the area of the starter pinion gear.
4. Disconnect the negative battery cable to prevent accidental cranking of the engine.
5. Insert a screwdriver in the small hole in the bottom of the starter (shown by the arrow in figure 10) and move the starter pinion and clutch assembly so that the pinion teeth and flywheel teeth are meshed. If necessary, rotate the flywheel so that a ring gear tooth is directly in the center of two pinion teeth and on the centerline of the two gears (figure 11).
6. Measure the clearance between the top of the ring gear tooth and bottom of the pinion tooth using the width of the wire gage (figure 11). Normal clearance is 0.5 to 1.5 mm (0.02 to 0.06 inch).
7. If the clearance is less than 0.5 mm (0.02-inch) and the starter whines after firing, shim the starter away from the flywheel.
   - Diesel engine (figure 8): Add shims as required. Total shim stack must not exceed 4.0 mm (0.016-inch). If starter shims are not available, washers made of shim stock can be used.
   - Gas engines (figure 9): Add 1.0 mm (0.04-inch) shims, one at a time, to both long bolts between starter mounting pads and engine, until noise problem is corrected. Do not use more than 2 shims, total.

8. If the pinion clearance is more than 1.5 mm (0.06-inch) and the starter whines during cranking, shim the starter toward the flywheel.
   - Diesel engine (figure 8): Add a 1.0 mm (0.04-inch) shim between the starter motor mounting pad and the engine. If a starter shim is not available, a washer made of shim stock can be used.
   - Gas engines (figure 9): Add 0.38 mm (0.015-inch) shims between the outboard starter mounting pad and engine mount until the noise stops. Do not add more than 4 shims, total.
9. After shimming, torque the mounting bolts.

Tighten

1. Gas engine starter mounting bolts to 45 N•m (33 ft. lbs.) (figure 9).
2. Diesel engine starter motors (figure 8):
   - Through bolt to 45 N•m (33 ft. lbs.).
   - Nut to 10 N•m (90 in. lbs.).
   - Bolt to 32 N•m (24 ft. lbs.).

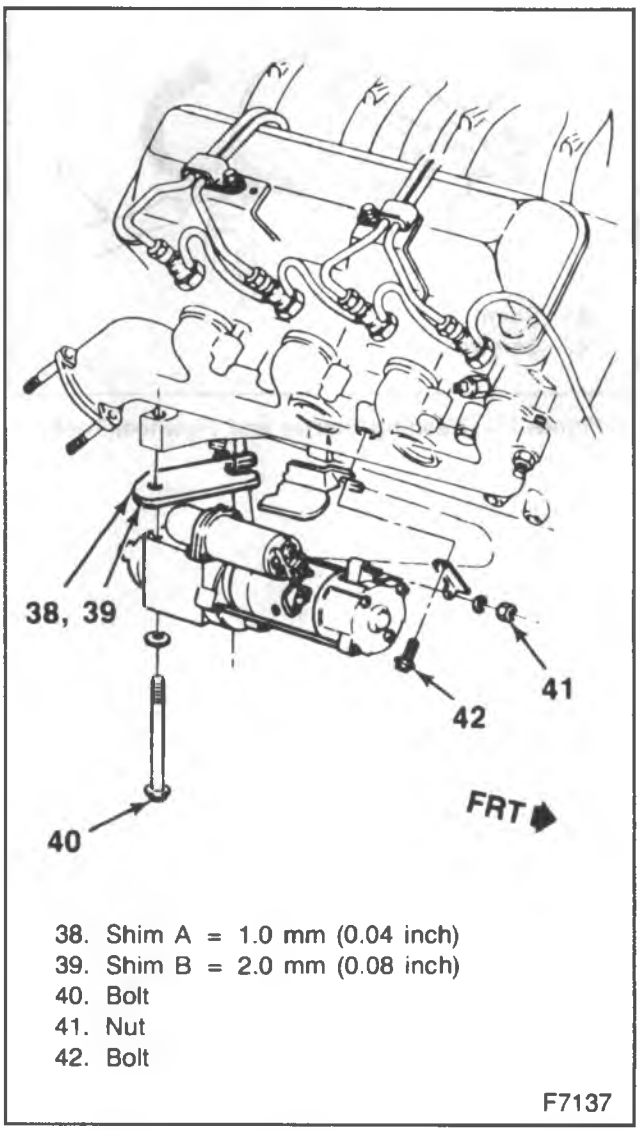

Figure 8—Shimming Diesel Engine Starting Motors

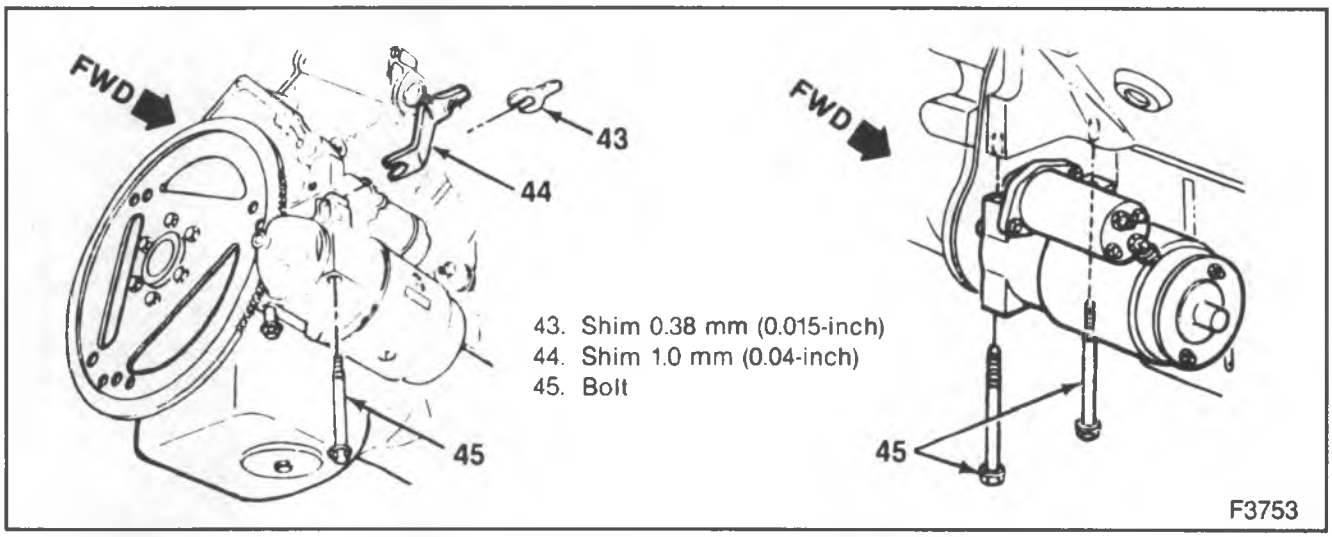

Figure 9—Shimming Gas Engine Starter Motors

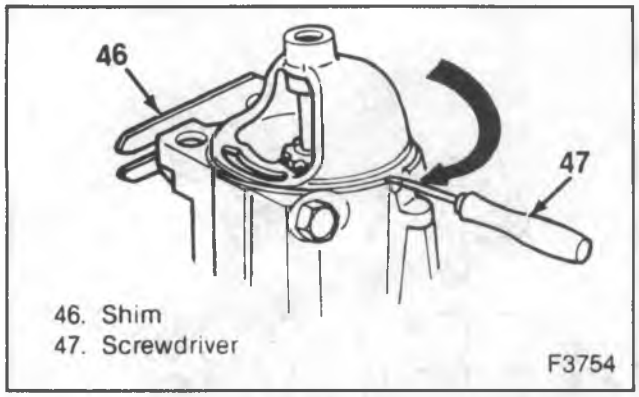

Figure 10—Meshing Starter and Flywheel Teeth

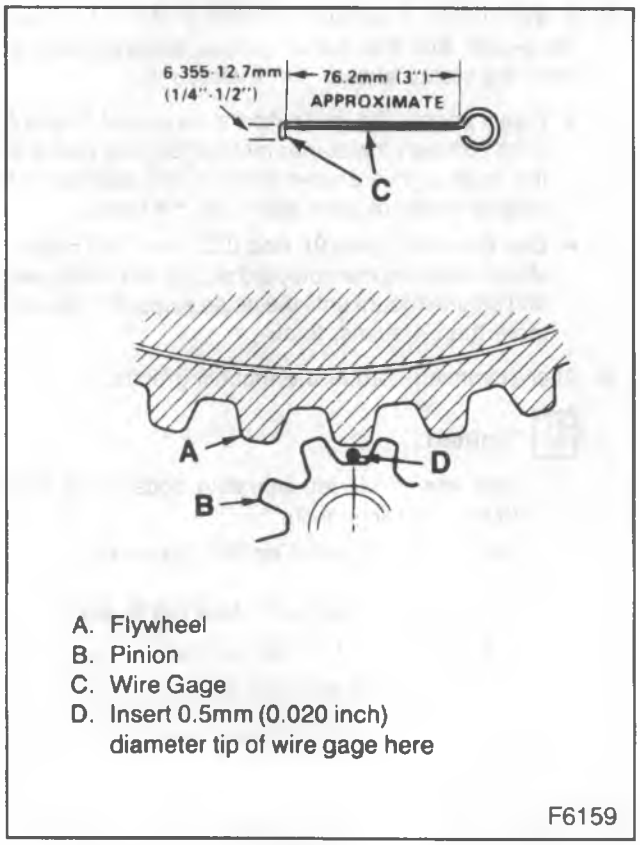

Figure 11—Flywheel to Pinion Clearance

DIAGNOSIS OF STARTER MOTOR NOISE

PROBLEM	POSSIBLE CAUSE	CORRECTION
High-pitched whine during cranking (before engine fires) but engine cranks and fires normally.	Distance too great between starter pinion and flywheel.	Remove shims at the starter mount. Refer to "Starter Motor Noise".
High-pitched whine after the engine fires as key is being released. The engine cranks and fires normally. This complaint is often diagnosed as "starter hang-in" or "solenoid weak".	Distance too small between starter pinion and flywheel. Flywheel runout contributes to the intermittent nature of the problem.	Add shims at the starter mount. Refer to "Starter Motor Noise".
A loud "whoop" after the engine fires but while the starter is still held engaged. Sounds like a siren if the engine is revved while the starter is engaged.	Usually due to a worn starter motor clutch.	Remove the starter motor and check the clutch. Refer to the Light Duty Truck Unit Repair Manual.
A "rumble" "growl" or (in severe cases) a "knock" as the starter is coasting down to a stop after starting the engine.	Usually due to a bent or unbalanced starter armature.	Remove the starter motor and check the armature. Refer to the Light Duty Truck Unit Repair Manual.

D0037

ON-VEHICLE SERVICE

MAINTENANCE

Keep starter terminals and all other terminals in the electrical system clean and tight. A loose or corroded connection or terminal will cause excessive resistance in the system which will result in hard starting.

At regular intervals, inspect the starting system to locate and correct potential causes of trouble before the system performance is affected.

Starting motors do not require lubrication except during overhaul.

STARTER MOTOR

If the battery, wiring and switches are in satisfactory condition, and the engine is functioning properly, remove the motor and refer to the Light Duty Truck Unit Repair Manual to service the SD-260 or SD-300.

Never operate the starter motor more than 30 seconds at a time without pausing to allow it to cool for at least two minutes. Overheating caused by excessive cranking will damage the motor.

STARTER MOTOR REPLACEMENT

Remove or Disconnect

1. Negative battery cable.
2. Starter braces or shields, if equipped.
3. Wires from the starter solenoid.

- Raise the vehicle.

4. Two bolts, washers and shims holding the starter to the engine.
5. Starter from the engine.

Install or Connect 1. Two bolts through the washers, shims and through the starter to the engine.

Tighten

- Bolts to 45 N•m (33 ft. lbs.).

- Lower the vehicle.
2. Wires to the solenoid terminals.
3. Braces or shields, if equipped.
4. Negative battery cable.

SPECIFICATIONS

STARTER SPECIFICATIONS

Engine		Starter		No Load Test @ 10 Volts			
				AMPS		RPM	
		Part No.	Series	Minimum	Maximum	Minimum	Maximum
RV	5.7L	10455305	SD300	70	110	6500	10700
		10455306	SD300	70	110	6500	10700
	6.2L	1113295	28MT	130	190	2300	5600
		1113296	28MT	130	190	2300	5600
	7.4L	10455306	SD300	70	110	6500	10700
P	4.3L	10455013	SD260	45	70	6500	11000
	5.7L	10455305	SD300	70	110	6500	10700
	6.2L	1113296	28MT	130	190	2300	5600
	7.4L	10455305	SD300	70	110	6500	10700

GMTB-3109-2A

STARTER SHIMS

Gas Engines		Diesel Engines	
Shim	Part No.	Shim	Part No.
0.38 mm (0.015-inch)	1246249	1.0 mm (0.04-inch)	23500396
1.0 mm (0.04-inch)	14036090	2.0 mm (0.08-inch)	23500397

T2237

FASTENER TORQUE

	N•m	Ft. Lbs.	In. Lbs.
Diesel Engine:			
Through Bolts	54	40	—
Nut	10	—	90
Bolt	41	30	—
Gas Engines:			
Through Bolts	54	40	—
Nut	15	11	90
Bolt	41	30	—

TB-3078-2A

SPECIFICATIONS (CONT.)

PARTS INFORMATION

PART NAME	GROUP
Starter Motor	2.041
Solenoid Switch Assy.	2.100
Brush	2.051
Starter Drive Assy.	2.086
Starter Motor Shim	2.042

GMTB-3186-2A

SECTION 6D3

CHARGING SYSTEM

NOTICE: When fasteners are removed, always reinstall them at the same location from which they were removed. If a fastener needs to be replaced, use the correct part number fastener for that application. If the correct part number fastener is not available, a fastener of equal size and strength (or stronger) may be used. Fasteners that are not reused, and those requiring thread locking compound will be called out. The correct torque value must be used when installing fasteners that require it. If the above conditions are not followed, parts or system damage could result.

CONTENTS

SUBJECT	PAGE
Description	6D3- 1
12-SI 100 Generator	6D3- 2
Circuit Operation	6D3- 2
CS-130 Generators	6D3- 2
CS-144 Generator	6D3- 4
Diagnosis	6D3- 5
Noisy Generator	6D3- 5
Electrical Tests	6D3- 5
SI Charging System	6D3- 5
CS-130 and CS-144 Charging Systems	6D3- 8
On-Vehicle Service	6D3- 9
Generator Belt Adjustment	6D3- 9
Generator Replacement	6D3-10
Specifications	6D3-11

DESCRIPTION

The charging system consists of the battery, the generator, the regulator, and the charging system indicator lamp circuitry. The generator supplies electrical power for charging the battery and operating accessories.

Two types of generators are used on these vehicles, the SI generator with an external 2-terminal connector on the regulator, and the CS generator with an external 4-terminal connector on the regulator. The diagnostic tests for these generators are different.

12-SI 100 GENERATOR

Figures 1 and 2

These generators are of the "Systems Integral" series (generators with built-in regulator).

The solid state regulator components are enclosed into a solid mold, and this unit, along with the brush holder assembly, is attached to the slip ring end frame. The regulator voltage setting cannot be adjusted.

The generator rotor bearings contain enough grease to eliminate the need for periodic lubrication. Two brushes carry current through the two slip rings to the field coil mounted on the rotor, and under normal conditions will provide long periods of attention-free service.

The 12-SI has a "Y" stator. The stator windings are assembled on the inside of a laminated core that forms part of the generator frame. A rectifier bridge connected to the stator windings contains six diodes, and electrically changes the stator AC voltages to a DC voltage which appears at the generator output (BAT) terminal. Generator field current is supplied through a diode trip which also is connected to the stator windings. A capacitor or condenser, mounted in the end frame, protects the rectifier bridge and diode trio from high voltages, and suppresses radio noise.

No periodic maintenance or adjustment is required on the generator assembly. For off-vehicle service, refer to the Light Duty Truck Unit Repair Manual.

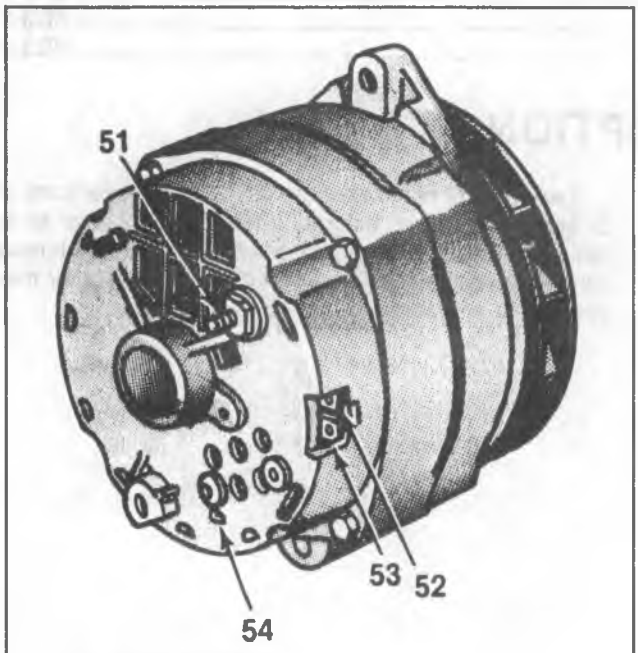

51. BAT Terminal
52. No. 1 Terminal
53. No. 2 Terminal
54. Field Ground Hole

F0013

Figure 1—12-SI Series 100 Generator

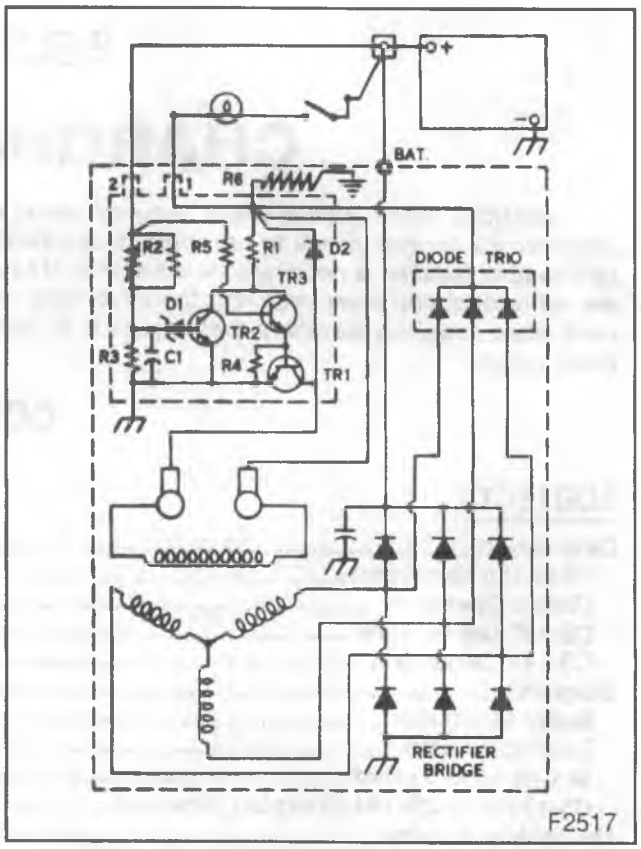

Figure 2—12-SI Series 100 Generator Charging Circuit

CIRCUIT OPERATION

When the engine control switch is turned to "RUN" or "START," the switch closes and current from the battery flows through the charging system indicator lamp, the number 1 terminal, the regulator, ground, and back to the battery. The charge indicator lamp then turns on.

With the generator operating, direct current (DC) voltage is applied to the battery through the "BAT" terminal. Some of the output flows through the diode into the field coil, then through the wire at terminal number 1 to the charge indicator lamp. The lamp goes out since approximately the same voltage is present at both sides of the lamp. On vehicles with gages a voltmeter measures voltage.

CS-130 GENERATORS

Figures 3, 4 and 5

These generators feature a high ampere output per pound of weight. The CS stands for charging systems and 130 is the measurement in millimeters of the outside diameter of the stator laminations.

This generator with integral regulator does not have a diode trio. The delta stator, rectifier bridge, and rotor with slip rings and brushes are electrically similar to other generators. A conventional fan and pulley are used, and an internal fan cools the slip rings, end frame, rectifier bridge and regulator.

The charge indicator lights up when the engine control switch is closed, and goes out when the engine is turning. If the change indicator is on with the engine running, a charging system problem is indicated. The indicator will glow at full brilliance, not half lit, if any charging problem occurs or if the system voltage is too high or too low.

The regulator voltage setting varies with temperature, and limits system voltage by controlling rotor field current. It switches rotor field current on and off at a fixed frequency of about 400 cycles per second. By varying the "ON-OFF" time, correct average field current for proper system voltage control is obtained. At high speeds, the "ON"-time may be 10 percent and the "OFF"-time 90 percent. At low speeds, with high electrical loads, "ON-OFF" time may be 90 percent and 10 percent respectively.

The regulator has four terminals, "P", "L", "I" and "S" (figure 1). Either the "L" or "I" terminal (or both) is used to turn the regulator on and allow field current to flow when the switch is closed. The "L" terminal must be connected through an indicator lamp or suitable resistor. The "I" terminal may be connected either directly to battery positive or through a resistor. These two terminals are often used in parallel, connected to two different vehicle circuits. The "P" terminal is connected internally to the stator and may be wires to a tachometer or other device. The "S" terminal may be used to sense voltage at another location on the vehicle for voltage control. If the "S" terminal is not used, the generator uses an internal voltage sense for control. Refer to the Light Duty Truck Wing Diagrams for specific application.

No periodic maintenance or adjustment is required on the generator. The CS-130 is serviceable by complete replacement only. It should not be disassembled for any reason.

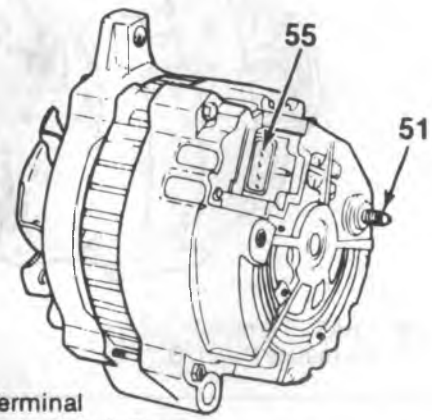

51. BAT Terminal
55. Terminals P, L, I, S

F2516

Figure 3—CS-130 Generator

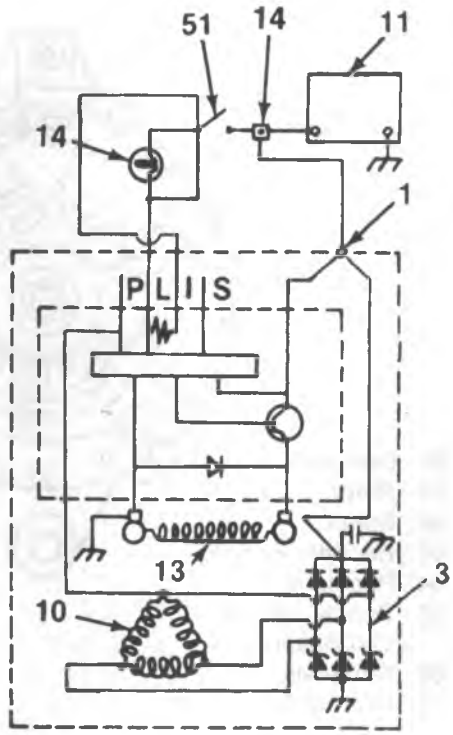

1. BAT Terminal
3. Rectifier Bridge
10. Stator
11. Battery
13. Field
14. Indicator Lamp
51. Switch

V0157

Figure 4—CS Generator Schematic

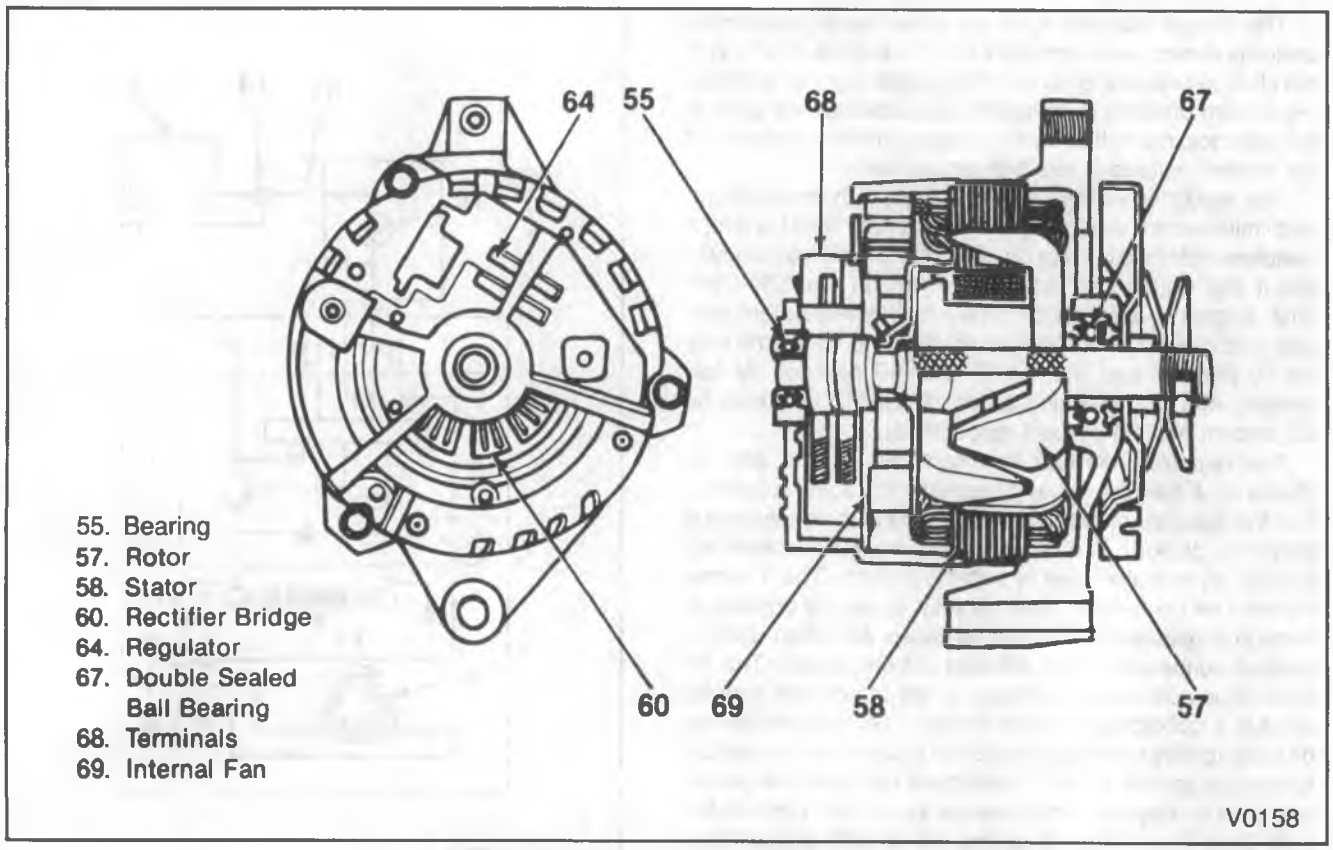

Figure 5—CS-130 Series Generator

CS-144 GENERATOR

Figure 6

The CS-144 is a larger version of the CS-130. The 144 indicates the outside diameter of the stator laminations in millimeters. Unlike the CS-130 the CS-144 is serviceable. For off-vehicle service, refer to the Light Duty Truck Unit Repair Manual.

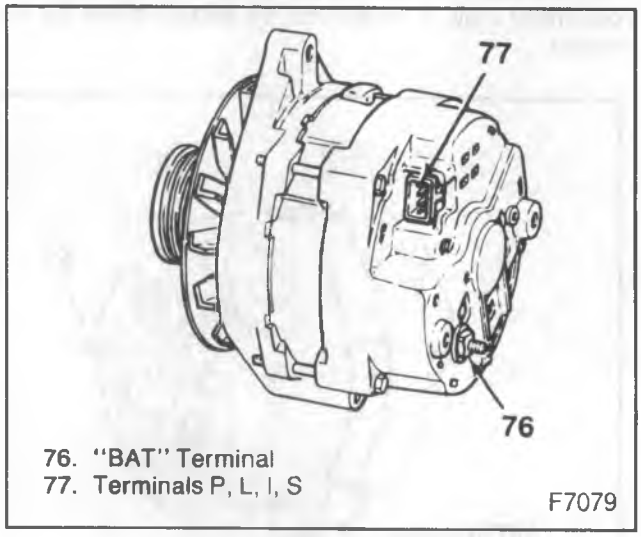

Figure 6—CS-144 Generator

DIAGNOSIS

NOISY GENERATOR

Noise from a generator may be caused by a loose drive pulley, loose mounting bolts, worn or dirty bearings, worn diode or stator. If the pulley and mounting bolts are snug and the noise continues, remove the generator for inspection and repair. Refer to "Generator Replacement" in this section.

Do not disassemble the CS-130 generator. Even separating the two end frames will cause damage to the slip ring bearings.

ELECTRICAL TESTS

Before performing the diagnosis procedures on the vehicle, be certain that the system wiring is good and the generator belt is not slipping. Also, the battery must be fully charged for a valid test of the charging system.

NOTICE: To avoid damage to the vehicle electrical system, observe the following precautions:

- Do not polarize the generator.
- Do not short across or ground any of the terminals in the charging circuit except as specifically instructed herein.
- NEVER operate the generator with the output terminal open-circuited.
- Make sure the generator and battery have the same ground polarity.
- When connecting a charger or bootser battery to the vehicle battery, connect negative to negative and positive to positive.

Trouble in the charging system will show up as one or more of the following conditions:

1. On vehicles without gages, unusual operation of the charging indicator lamp.
2. An undercharged battery, indicated by slow cranking or a dark battery hydrometer.
3. An overcharged battery, indicated by spewing of electrolyte from the vents.

SI CHARGING SYSTEM

CHARGING SYSTEM INDICATOR LAMP OPERATION

Check the indicator lamp for normal operation in the "Charging System Diagnosis," (figure 7). If lamp operation is normal, proceed to "Undercharged Battery."

UNCHARGED BATTERY

Slow cranking or a dark battery hydrometer can be caused by one or more of the following conditions even though the indicator lamp may be operating normally. The following procedures also apply to vehicles equipped with a voltmeter.

1. Check that the undercharged condition has not been caused by accessories having been left on for extended periods.
2. Check the drive belt for proper tension. Refer to ENGINE COOLING (SEC. 6B1) for belt specifications.
3. If you suspect the battery is bad, perform a load test. Refer to "Battery" earlier in this section.
4. Inspect the wiring for cracks or breaks. Check all circuit connections, cable clamps and battery terminals for tightness and cleanliness.
5. With the engine control switch "ON" and all wiring harness leads connected, use a voltmeter for the following checks:

Install or Connect (Figures 1 and 2)

1. Voltmeter from the generator battery terminal to ground.
   - Should read 12 volts.
2. Voltmeter from the number 1 terminal to ground.
   - Should read 12 volts.
3. Voltmeter from the number 2 terminal to ground.
   - Should read 12 volts.

   A zero reading on any of the above indicates an open between the voltmeter connection and the battery. If checks 1 through 5 are normal, perform the generator output test.

OVERCHARGED BATTERY

If the battery feels hot, is spewing electrolyte, or lamps seem too bright when turned on, an overcharged condition may exist.

To check the voltage, install a voltmeter across the battery. Run the engine at moderate speed with all accessories off. If the voltage reads 15.5 or more, remove the generator for repair.

GENERATOR OUTPUT TEST (Figures 8 and 9)

1. Disconnect the battery ground cable.
2. Connect an ammeter in the circuit at the battery terminal of the generator.
3. Reconnect battery ground cable.
4. Turn on the radio, windshield wipers, headlamps (high beam) and blower motor high speed.
5. Connect a carbon pile across the battery.
6. Run the engine at moderate speed (about 2,000 rpm) and adjust the carbon pile to obtain maximum current output.
7. If the ampere output is within 10 amperes of the rated output as stamped on the generator frame, the generator is probably all right.
8. If the vehicle is equipped with a charging system indicator lamp, and the lamp remains on while the engine runs, and ampere output is nromal, remove the generator for repair. Check the diode trio and rectifier bridge.
9. If the ampere output is not within 10 amperes of the rated output, see if the field ground hole is accessible (figure 9). If it is not accessible go to step 14.

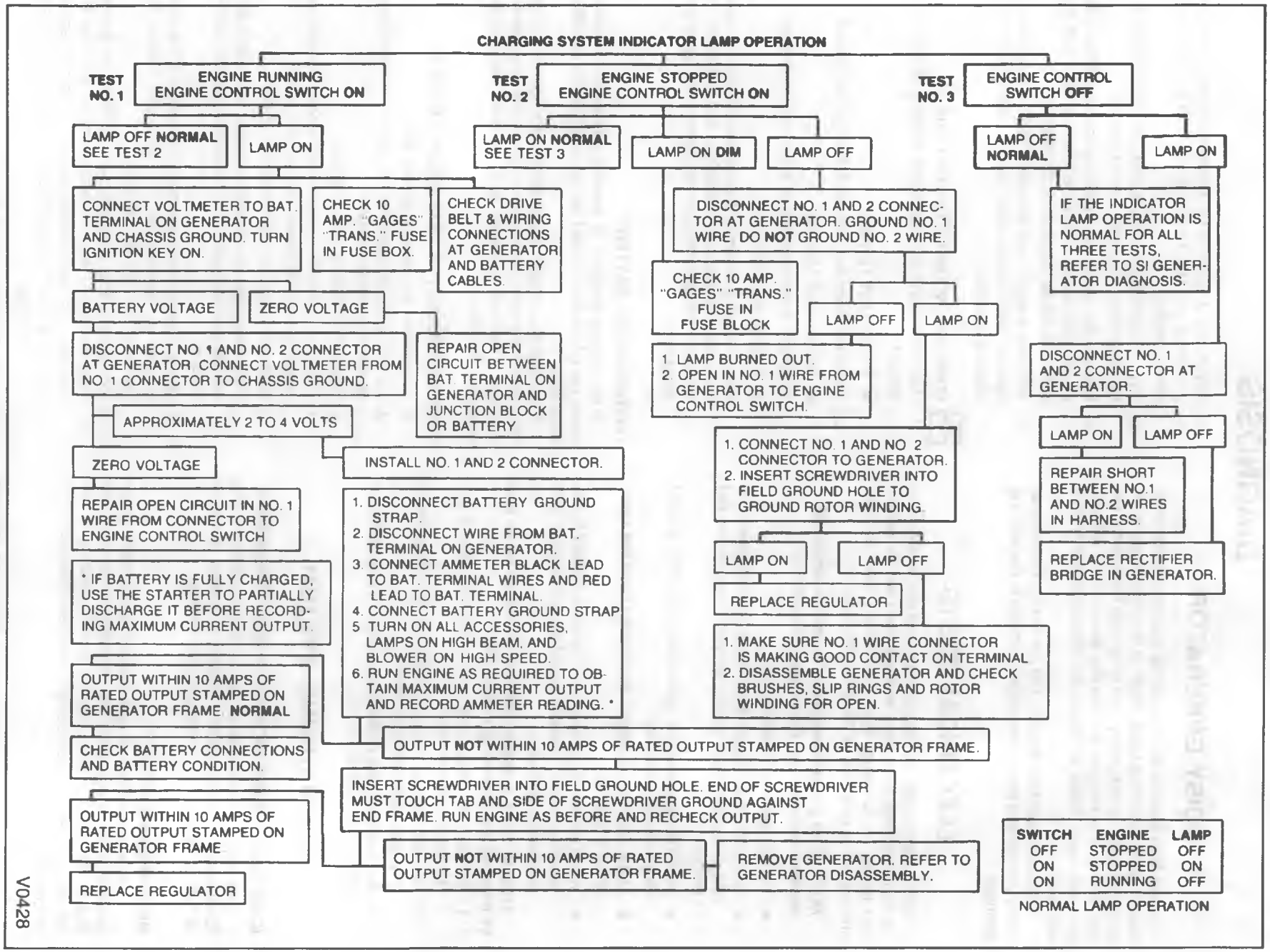

Figure 7—Charging System Diagnosis

10. Ground the field winding by inserting a screwdriver into the field ground hole.

NOTICE: The tab is within 19 mm (3/4-inch) of the casting surface. Do not force the screwdriver deeper than 25 mm (1-inch) into the end frame or the generator may be damaged.

11. Run the engine at moderate speed and adjust the carbon pile to get maximum current output.
12. If the output is within 10 amperes of the rated output, remove the generator for repair. Refer to the Light Duty Truck Unit Repair Manual to check the field winding and regulator.
13. If the output is not within 10 amperes of rated output, remove the generator and check the field winding, diode trio, rectifier bridge and stator.
14. If the field ground hole is not accessible, remove the generator for repair.

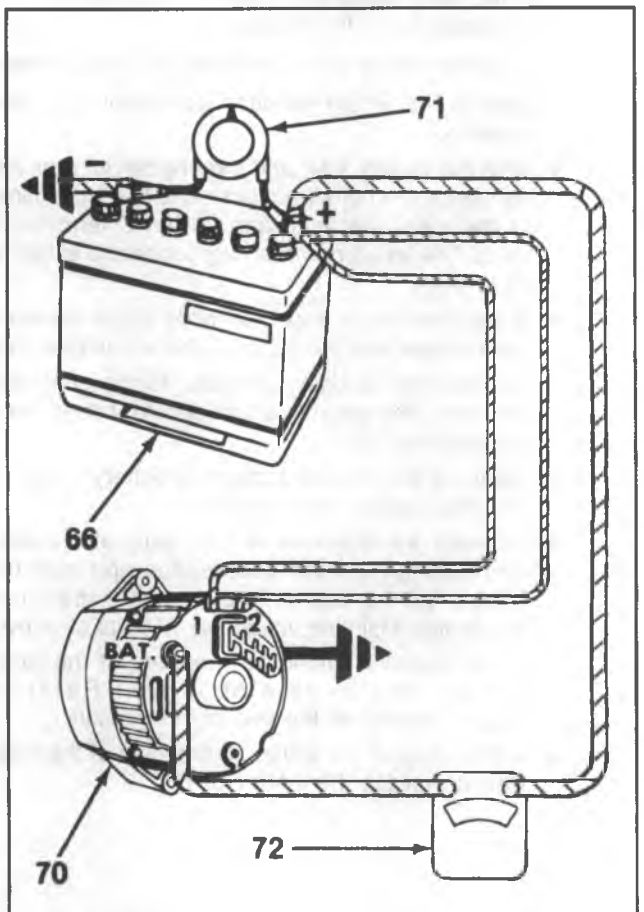

66. Battery
70. Generator
71. Carbon Pile
72. Ammeter

F0010

Figure 8—Connections for Generator Output Test

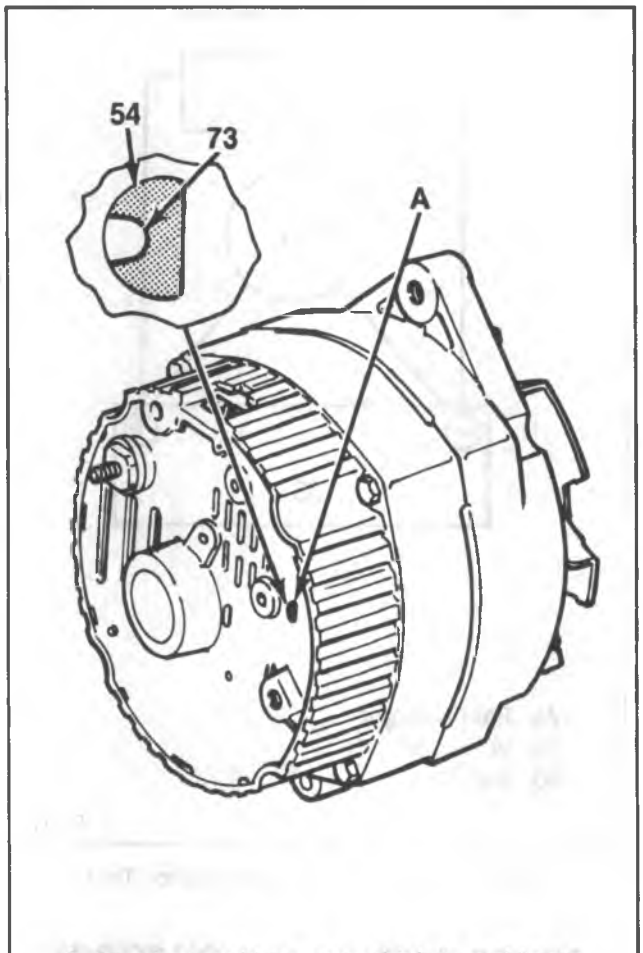

A. Insert screwdriver, ground tab to end frame.
54. Field Ground Hole
73. Tab

L0471

Figure 9—Generator Field Ground Tab

GENERATOR DIAGNOSTIC TESTER INDICATIONS

If a tester is available, check the generator following the tester manufacturer's instructions. It will indicate about 98 percent of the charging system problems.

TRANSISTORIZED VOLTAGE REGULATOR TEST

Connect a test charger and a voltmeter to the battery as shown in figure 10. With the engine control switch on "RUN" and the engine "OFF," slowly increase the charge rate. The charging system indicator lamp (on vehicles without gages) will dim at the voltage regulator setting. The setting should be at a minimum of 13.5 volts and a maximum of 16.0 volts.

This test works if the rotor circuit is good, even if the stator, rectifier bridge or diode trio are bad.

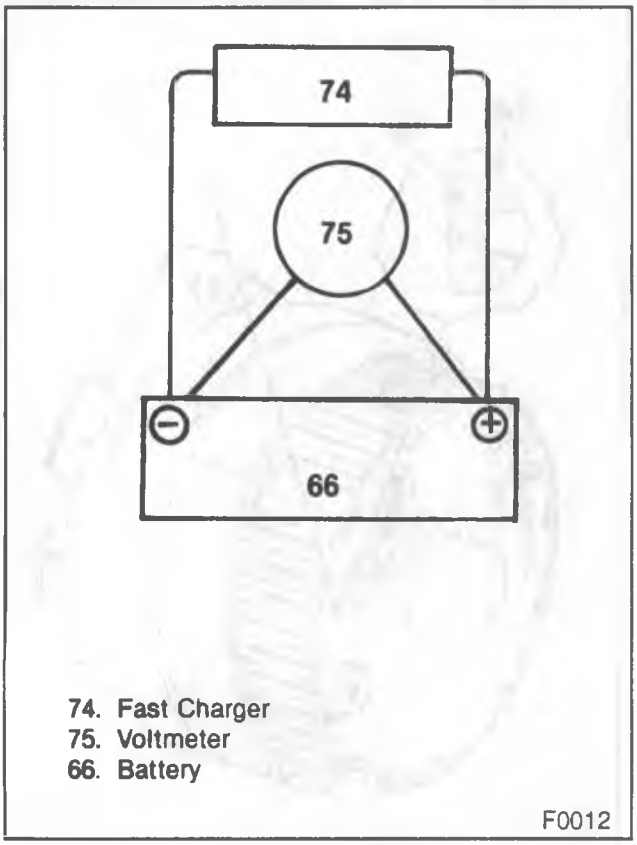

Figure 10—On-Vehicle Regulator Test

CS-130 AND CS-144 CHARGING SYSTEM

CIRCUIT DIAGNOSIS

Trouble in the charging system will show up as one or more of the following conditions:

- Abnormal operation of indicator lamp.
- An undercharged battery as evidence by slow cranking or dark hydrometer.
- An overcharged battery as evidence by excessive spewing of electrolyte from the vents.

A basic wiring diagram for the charging system is shown in figure 5. When the system is operating normally, the indicator lamp (on vehicles so equipped) will come on when the engine control switch is turned on and go out when the engine starts. If the lamp operates abnormally, or if an undercharged or overcharged battery condition occurs, the following procedure may be used to diagnose the charging system. Remember that an undercharged battery is often caused by accessories being left on overnight, or by a switch stuck closed which allows a lamp, such as a trunk or glove box lamp, to stay on.

This generator does not have a field ground hole.

DIAGNOSTIC TEST FOR CS-130 AND CS-144

1. Check belt for wear and tension. Refer to ENGINE COOLING (SEC. 6B1) for belt tensions. Check wiring.
2. Go to Step 5 for vehicles without a charge indicator lamp.
3. With the engine control "ON" and the engine stopped, the lamp should be "ON." If not, detach the wiring harness at the generator and ground the "L" terminal lead.
   - If the lamp lights, replace the generator.
   - If the lamp does not light, locate the open circuit between the ground lead and the engine control switch. The lamp may be open.
4. With the switch "ON" and the engine running at moderate speed, the lamp should be "OFF." If not, detach the wiring harness at the generator.
   - If the lamp goes out, replace the generator.
   - If the lamp stays on, check for a grounded "L" terminal wire in the harness.
5. If the battery is undercharged or overcharged.
   - Detach the wiring harness connector from the generator.
   - With the switch "ON" and the engine not running, connect a voltmeter from ground to the "L" terminal in the wiring harness, and to the "I" terminal, if used. The wiring harness may connect to either "I" or to both.
   - A zero reading indicates an open circuit between the terminal and the battery. Correct as required.
   - Connect the harness connector to the generator and run the engine at moderate speed with accessories "OFF."
   - Measure the voltage across the battery. If above 16 volts, replace the generator.
   - Connect an ammeter at the generator output terminal, turn on the accessories and load the battery with a carbon pile to obtain maximum amperage. Maintain voltage at 13 volts or above.
   - If the output is within 15 amperes of the rated output, the generator is OK. Refer to "Specifications" at the end of this section.
   - If the output is not within 15 amperes of the rated output, replace the generator.

GENERATOR BENCH CHECK

1. Make connections as shown in figure 11, but be sure to leave the carbon pile disconnected. The ground polarity of the generator and battery must be the same. The battery must be fully charged. Use a 30 to 500 ohm resistor between the battery and the "L" terminal.
2. Slowly increase generator speed and observe the voltage.
3. If the voltage is uncontrolled and increases above 16 volts, the rotor field is shortened, the regulator is not working properly, or both. A shorted rotor field coil can cause problems in the regulator.
4. If the voltage is below 16 volts, increase speed and adjust the carbon pile to obtain maximum amperage output. Maintain the voltage above 13 volts.
5. If the output is within 15 amperes of the rated output, the generator is good.
6. If the output is not within 15 amperes of the rated output, replace the generator.

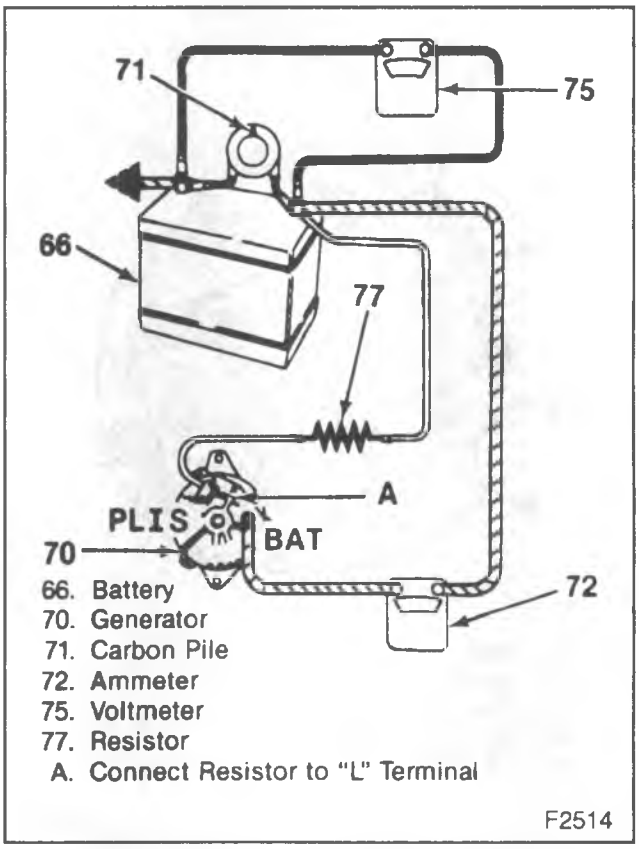

Figure 11—Connections for Bench Check Test

ON-VEHICLE SERVICE

GENERATOR BELT ADJUSTMENT

Directions for belt replacement and adjustment are given in ENGINE COOLING (SEC. 6B1).

Some vehicles are equipped with automatic belt tensioners. On vehicles without them, the belt tension is adjusted by forcing the generator against the belt until the belt tension specification is reached. The generators used in these applications have an adjustment lug on the drive end frame which should be used to push the generator against the belt while the adjustment bolt is tightened (figure 12). Use a 3/4-inch wrench to hold the generator by this lug.

If the lug is not easily accessible, the belt may be tightened by applying pressure to the side of the drive end frame. If this cannot be done, insert a block of wood between the prying instrument and the side of the generator to distribute the force to a wider area which includes the drive end frame. Do not pry directly against the stator or slip ring end frame or the generator may be damaged.

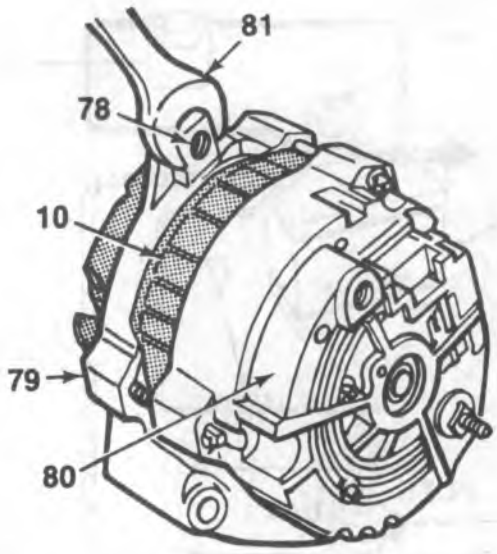

10. Stator
78. Adjustment Lug
79. Drive End Frame
80. Slip Ring End Frame
81. 3/4 Inch Wrench

F7662

Figure 12—Generator Adjustment Lug

GENERATOR REPLACEMENT

The removal and installation instructions serve only as a guide. Additional operations may be required on some vehicles to remove other equipment to gain access to the generator, drive belts and brackets.

CAUTION: Failure to observe Step 1 in this procedures may result in an injury from the hot battery lead at the generator.

Remove or Disconnect

1. Negative battery cable at the battery.
2. Air cleaner intake duct.
3. Bolts from the radiator fan shroud, if shroud removal is necessary.

- Position the upper radiator hose away from the shroud, to facilitate removal.

4. Windshield washer solvent reservoir, if necessary.
5. Hood latch cable, if necessary.
6. Radiator hold-down brackets, if necessary (on vehicle equipped with cruise control).
7. Fan shroud, if necessary.
8. Generator braces, if present.
9. Generator upper mounting/adjusting bolt.
10. Drive belt.

- Loosen lower mounting bracket nuts.

11. Harness connections from the back of the generator.
12. Generator pivot bolt.
13. Generator.

Install or Connect

1. Generator. Loosely install pivot bolt.
2. Harness connections to the back of the generator.
3. Generator braces, if present.
4. Drive belt.
5. Generator upper mounting/adjusting bolt.

- Do not tighten.

Tighten

- Generator pivot bolt. Refer to: "Specifications" at the end of this section.
- Drive belt and upper mounting/adjusting bolt. Refer to ENGINE COOLING (SEC. 6B1) for belt tightening specifications. For adjusting bolt torque, refer to "Specifications" at the end of this section.
- Position the fan shroud, if removed, against the radiator.

6. Radiator hold-down bolts. If removed (on vehicles equipped with cruise control).
7. Hood latch cable, if removed.
8. Windshield washer solvent reservoir, if removed.
9. Upper radiator hose, if removed, to radiator.
10. Bolts to the radiator fan shroud, if removed.
11. Air cleaner intake duct.
12. Negative battery cable to the battery.

    Refer to the Light Duty Truck Unit Repair Manual for off-vehicle service.

SPECIFICATIONS

GENERATOR APPLICATIONS

Engine	Generator	Part Number	Mounting Torque			
			Top Bracket Bolt		Bottom Bracket Bolt	
			N·m	Ft. Lbs.	N·m	Ft. Lbs.
RV 5.7L	K60	1101293	10-14	—	40-50	30-37
	K99	1101317	10-14	—	40-50	30-37
	K68	1101318	10-14	—	40-50	30-37
	8A3	1101493	10-14	—	40-50	30-37
	K60	1101812	10-14	—	40-50	30-37
6.2L	K60	1101635	26-38	19-28	40-50	30-37
7.4L	K60	1101814	10-14	—	40-50	30-37
	K60	1105688	10-14	—	40-50	30-37
	K99	1105712	10-14	—	40-50	30-37
	K68	1105716	10-14	—	40-50	30-37
	8A3	10479809	10-14	—	40-50	30-37
P 4.3L	K99	1105718	30-40	22-30	40-50	30-37
5.7L	K99	1105718	30-40	22-30	40-50	30-37
	K68	1105720	30-40	22-30	40-50	30-37
6.2L	K99	1101634	30-40	22-30	40-50	30-37
	K68	1101636	30-40	22-30	40-50	30-37
	K68	1101806	30-40	22-30	40-50	30-37
	K81	1105632	27	20	43	32
7.4L	K68	1101578	30-40	22-30	40-50	30-37
	KW2	1101623	30-40	22-30	40-50	30-37
	KW2	1102635	30-40	22-30	40-50	30-37
	K68	10479874	30-40	22-30	40-50	30-37

GMTB-3093-2A

GENERATOR SPECIFICATIONS

Part No.	Series (Type 100)	Rotation Viewing Dr. End	Field Current @ 12 Volts 27°C (80°F) AMPS	Cold Output			
				Amps	RPM	Amps	RPM
1101293	CS130	CW	6.0-7.5	30	1600	100	6500
1101317	CS130	CW	4.8-5.7	30	1600	85	6500
1101318	CS130	CW	6.0-7.5	42	1600	105	6500
1101493	CS144	CW	5.7-7.1	50	1600	120	6500
1101571	CS130	CW	6.0-7.5	42	1600	105	6500
1101623	CS130	CW	5.0-5.7	50	1600	124	6500
1101634	CS130	CW	4.8-5.7	30	1600	85	6500
1101635	CS130	CW	6.0-7.5	36	1600	100	6500
1101636	CS130	CW	6.0-7.5	42	1600	105	6500
1101806	CS130	CW	6.0-7.5	42	1600	105	6500
1101812	CS130	CW	6.0-7.5	36	1600	100	6500
1101814	CS130	CW	6.0-7.5	36	1600	100	6500
1102635	CS144	CW	5.0-5.7	50	1600	124	6500
1105632	12SI	CW	4.9-5.0	23	1600	70	6500
1105688	CS130	CW	6.0-7.5	36	1600	100	6500
1105712	CS130	CW	4.8-5.7	30	1600	85	6500
1105716	CS130	CW	6.0-7.5	42	1600	105	6500
1105718	CS130	CW	6.0-7.5	42	1600	105	6500
1105720	CS130	CW	6.0-7.5	42	1600	105	6500
10479809	CS144	CW	5.0-5.7	50	1600	124	6500
10479812	CS144	CW	5.0-5.7	50	1600	124	6500

GMTB-3209-2A

SECTION 6D4

IGNITION SYSTEM

NOTICE: When fasteners are removed, always reinstall them at the same location from which they were removed. If a fastener needs to be replaced, use the correct part number fastener for that application. If the correct part number fastener is not available, a fastener of equal size and strength (or stronger) may be used. Fasteners that are not reused, and those requiring thread locking compound will be called out. The correct torque value must be used when installing fasteners that require it. If the above conditions are not followed, parts or system damage could result.

CONTENTS

SUBJECT	PAGE
Description	6D4- 1
Distributor	6D4- 1
Ignition Timing	6D4- 2
Spark Plug Wires	6D4- 3
Spark Plugs	6D4- 3
Diagnosis	6D4- 3
Distributor/Timing System	6D4- 3
Diagnosis of Spark Plugs	6D4- 5
On-Vehicle Service	6D4- 6
Service Precautions	6D4- 6
Test for Coil	6D4- 6
Distributor Replacement	6D4- 6
Coil Replacement	6D4- 7
Ignition Timing	6D4- 7
Spark Plug Wires	6D4- 8
Spark Plug Wire Replacement	6D4- 8
Specifications	6D4-17

DESCRIPTION

All ignition systems include a battery, a distributor, an engine control switch, spark plugs, and the primary and secondary wiring. Refer to BATTERY (SEC. 6D1). Refer to CAB ELECTRICAL (SEC. 8A) for information on the engine control switch.

On the engine with throttle body injection (TBI), the ignition system includes a knock sensor, an electronic spark control module, a computer (ECM), and a distributor with a separate coil.

DISTRIBUTOR

The distributor has a separate coil and connects to the rotor through a high tension wire (figure 1).

The distributor has an internal magnetic pick-up assembly which contains a permanent magnet, a pole piece with internal teeth, and a pick-up coil. When the teeth of the timer core, rotating inside the pole piece, line up with the teeth of the pole piece, an induced voltage in the pick-up coil signals the electronic module to trigger the coil primary circuit. The primary current decreases and a high voltage of up to 35,000 volts is induced in the ignition coil secondary winding. This voltage is directed through the rotor and secondary leads to fire the spark plugs. The capacitor in the distributor is for radio noise suppression.

The magnetic pick-up assembly is mounted over the main bearing on the distributor housing. The distributor shaft is mounted on the camshaft at the rear of the engine, and rotates at one-half the rpm of the engine.

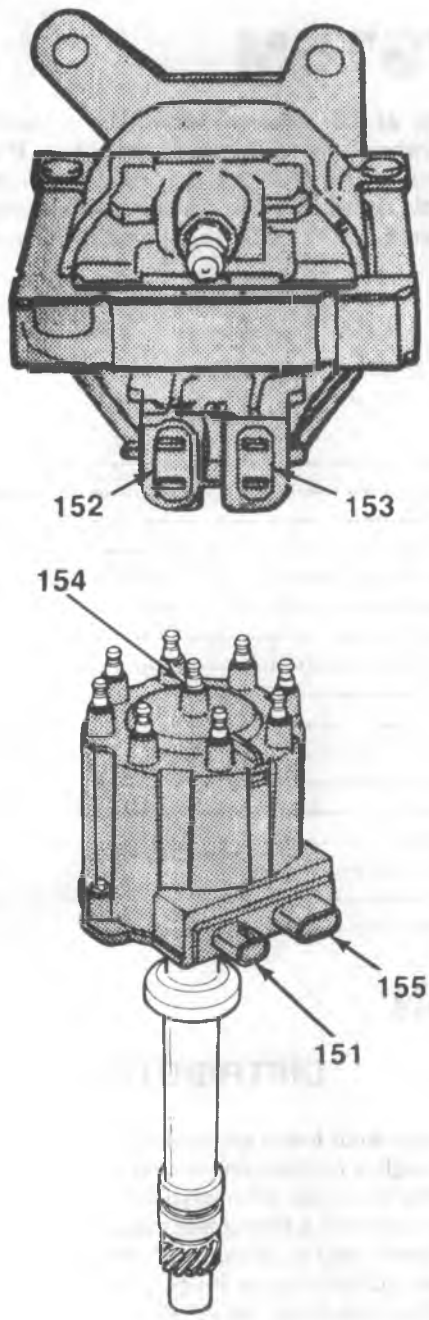

151. Ignition Coil Connector Terminals
152. Terminal for Distributor Module Connector
153. Terminal for Ignition Switch and Tachometer Connector
154. Terminal for Coil Lead
155. Four Terminal Connector

V0275

Figure 1—Distributor with Sealed Module Connectors and Separate Coil

Spark timing changes are determined electronically by the ECM (computer), which monitors information from various engine sensors, computes the desired spark timing, and signals the distributor.

The distributor does not contain centrifugal weights, and springs, or a vacuum advance unit like the older carbureted engines.

Each TBI equipped engine also has a knock sensor mounted in the engine block (figure 2) and connected by a blue wire to a spark control module (called a "half-function box"). In response to engine knock, a signal is sent from the sensor to the module and then to the ECM, which computes how much to retard spark timing to reduce knock. A retard command is then sent to the distributor.

Information on TBI and the computer controlled ignition system, system components and their locations, and diagnostic charts are located in the Fuel and Emissions Manual, if using X-9152 or to the rear of this manual if using ST330-91.

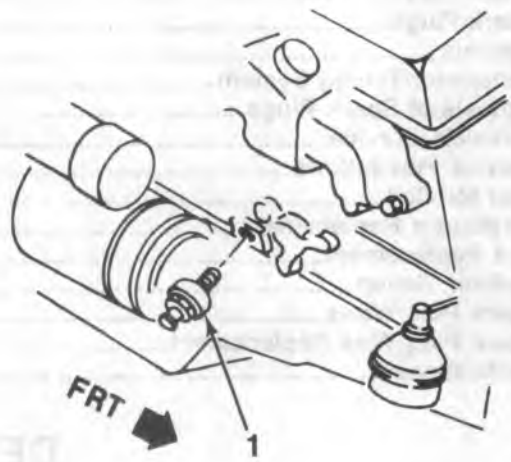

1. Knock Sensor

V0281

Figure 2—Knock Sensor

IGNITION TIMING

Timing specifications for each engine are listed on the Vehicle Emissions Control Information label on the radiator support. Always follow Vehicle Emissions Control Information label procedures when adjusting timing. When using a timing light, connect an adapter between the number 1 spark plug and the number 1 spark plug wire, or use an inductive type pick-up. Do not pierce the plug lead. Once the insulation of the spark plug cable has been broken, voltage will jump to the nearest ground, and the spark plug will not fire properly.

Some engines incorporate a magnetic timing probe hole for use with special electronic timing equipment. Consult manufacturer's instructions for use of this equipment.

SPARK PLUG WIRES

The spark plug wiring is a carbon impregnated cord conductor encased in an 8mm diameter rubber jacket. The silicone spark plug boots from a tight seal on the plugs. Refer to "Spark Plug Wires" later in this section for service precautions.

SPARK PLUGS

Resistor type, tapered seat spark plugs are used on all engines. No gasket is used on these tapered seat plugs. Refer to figures 3 and 4 for an explanation of letter coding on spark plugs. Refer to the Vehicle Emissions Control Information label on the radiator support for correct gap information.

Normal or average service is assumed to be a mixture of idling, slow speed, and high speed operation with some of each making up the daily total driving. Occasional or intermittent high-speed driving is essential to good spark plug performance as it provides increased and sustained combustion heat that burns away any excess deposits of carbon or oxide that may have accumulated from frequent idling or continual stop-and-go or slow-speed driving. Spark plugs are protected by an insulating ripple made of special heat-resistant material which covers the spark plug terminal and extends downward over a portion of the plug insulator. These nipples prevent flash-over with resultant engine misfire, even though a film is allowed to accumulate on exposed portion of the plug porcelains.

Do not mistake corona discharge for flash-over or a shorted insulator. Corona is a steady blue light appearing around the insulator, just above the shell crimp. It is the visible evidence of a high-tension field, and has no effect on ignition performance. Usually it can be detected only in darkness. This discharge may repel dust particles, leaving a clear ring on the insulator just above the shell. This ring is sometimes mistakenly regarded as evidence that combustion gases have blown out between the shell and insulator.

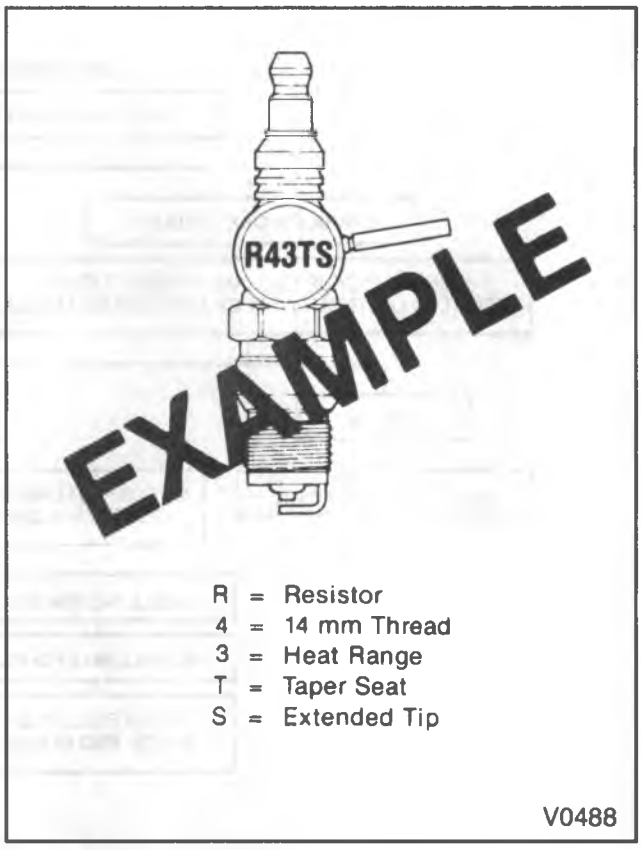

Figure 3—Spark Plug Coding

Numbers relate to thread size as follows:
1st number denotes THREAD SIZE

4 = 14 mm	2 = 1/2-inch taper
8 = 18 mm	5 = 1/2-inch
10 = 10 mm	6 = 3/4-inch
12 = 12 mm	7 = 7/8-inch

2nd number denotes HEAT RANGE

0-1-2-3-4-5-6-7-8-9
COLD ———— HOT

F2496

Figure 4—Spark Plug Coding Chart

DIAGNOSIS

DISTRIBUTOR/TIMING SYSTEM

CAUTION: To prevent possible injury from a moving vehicle or operating engine, do the following before performing the checks:

1. Engage the parking brake and block the wheels.
2. Place the automatic transmission in "PARK" or the manual transmission in "NEUTRAL".
3. Refer to the Fuel and Emissions Service Manual for information on the computerized ignition system, including the diagnostic use of the "Service Engine Soon" lamp.
4. Refer to the Light Duty Truck Unit Repair Manual for distributor component checks.

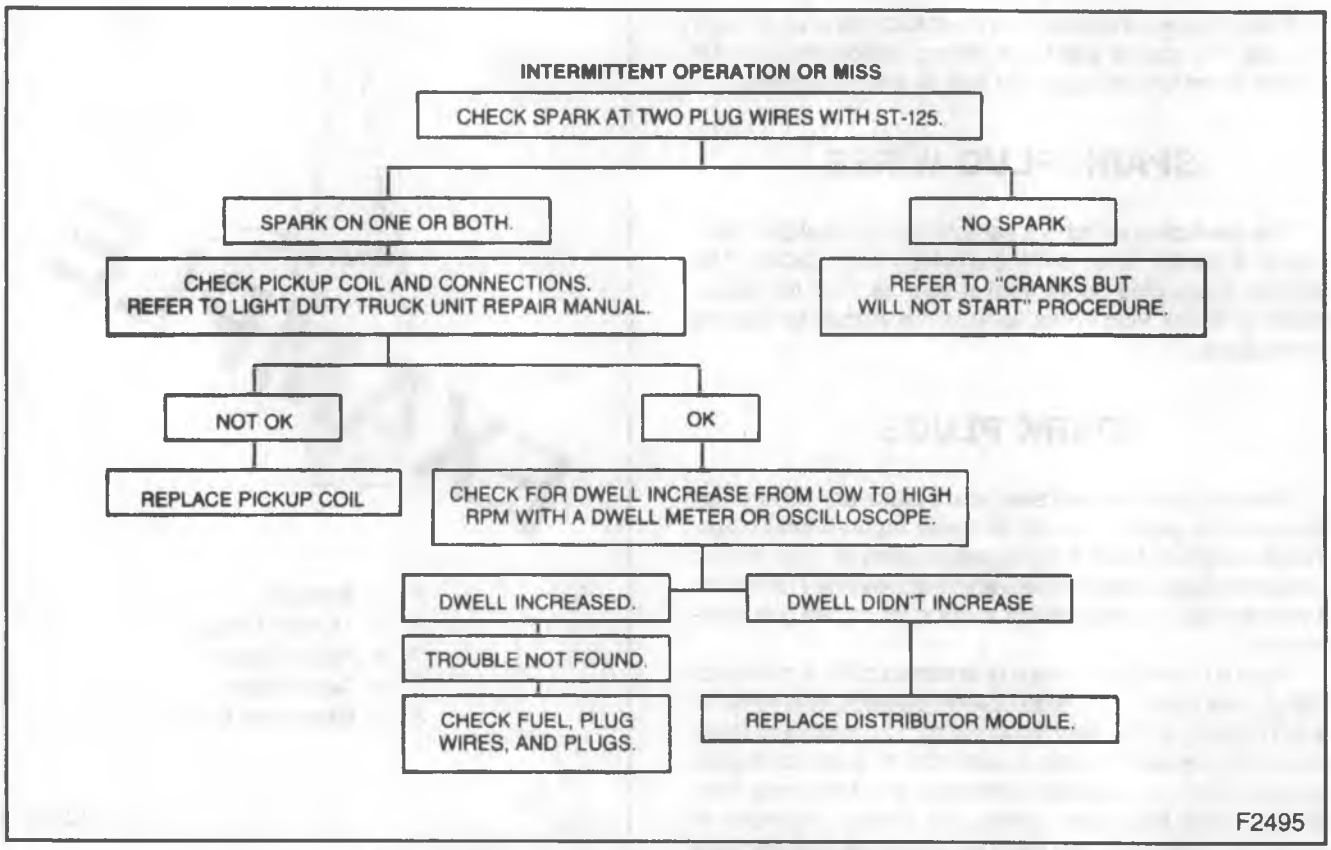

Figure 5—Ignition System Diagnosis

DIAGNOSIS OF SPARK PLUGS

PROBLEM	POSSIBLE CAUSE	CORRECTION
Brown to grayish-tan deposits and slight electrode wear.	Normal wear.	Clean, regap, reinstall.
Dry, fluffy black carbon deposits.	1. Air/fuel mixture is too rich. 2. Sticking EFE valve or manifold heat valve. 3. Poor ignition output.	1. Check the air/fuel mixture. Replace the air cleaner if clogged. 2. Replace if necessary. 3. Check the distributor coil connections and cables (discussed in this section). Refer to the Fuel and Emission Service Manual.
Wet, oily deposits with very little electrode wear.	1. "Break-in" of new or recently overhauled engine. 2. Excessive valve stem guide clearances. 3. Worn intake valve seals.	1. Degrease, clean and reinstall the plugs. 2. Refer to ENGINE, DRIVEABILITY AND DIAGNOSIS (SEC. 6A). 3. Replace the seals.
Red, brown, yellow and white colored coatings on insulator. Engine misses intermittently under severe operating conditions.	By-products of combustion.	Clean, regap, and reinstall. If heavily coated, replace.
Colored coatings heavily deposited on portion of the plug projecting into the chamber and on the side facing the intake valve.	Leaking seals if the condition is found in only one or two cylinders.	Check the seals. Replace if necessary. Clean, regap, and reinstall the plugs.
Shiny yellow glaze coating on the insulator.	Melted by-products of combustion.	Avoid sudden acceleration with wide-open throttle after long periods of low speed driving. Replace the plugs.
Burned or blistered insulator tips and badly eroded electrodes.	Overheating.	1. Check the cooling system. 2. Check for sticking heat riser valves. Refer to ENGINE, DRIVEABILITY AND DIAGNOSIS (SEC. 6A). 3. Check the air-fuel mixture. May be too lean. Refer to the Fuel and Emissions Service Manual for TBI engines. 4. Check the heat range of the plugs. May be too hot. 5. Check the ignition timing. May be overadvanced. 6. Check the torque value of the plugs to ensure good plug-engine seat contact.
Broken or cracked insulator tips.	Heat shock from sudden rise in the tip temperature under severe operating conditons. Improper gapping of the plugs.	Replace the plugs. Gap correctly.

TB-3116-2A

ON-VEHICLE SERVICE

SERVICE PRECAUTIONS

Some service tachometers and electronic diagnostic equipment may NOT be compatible with these ignition systems. Consult your tool representative to update your equipment for compatibility with these systems.

1. When making compression checks, disconnect the engine control switch feed wire at the distributor. When disconnecting this connector, release the locking tab while pulling downward on the connector body; do not use a screwdriver or tool to release the locking tab as it may break the tab.
2. No periodic lubrication is required. Engine oil lubricated the lower bushing and an oil-filled reservoir provides lubrication for the upper bushing.

NOTICE: The tachometer terminal must NEVER be allowed to touch ground, as damage to the module and/or ignition coil can result.

3. The TACH terminal is located at the coil (figure 1).
4. There is no dwell adjustment since this is controlled by the module.
5. The material used to construct the spark plug wires is very soft and will withstand high heat and carry a higher voltage. Due to the more pliable wire, scuffing and cutting has become more likely. Route the spark plug wires correctly to prevent chafing or cutting. When removing a spark plug wire form a spark plug, twist the boot where it seals onto the spark plug, then pull on the boot to remove the wire.

TEST FOR COIL

1. Disconnect the distributor lead and wiring from the coil.
2. Connect an ohmmeter as shown in figure 6, step 1. Use the high scale. The reading should be infinite. If not, replace the coil.
3. Connect the ohmmeter as shown in step 2. Use the low scale. The reading should be very low or zero. If not, replace the coil.
4. Connect the ohmmeter as shown in step 3. Use the high scale. The meter should not read infinite. If it does, replace the coil.
5. Reconnect the distributor lead and wiring to the coil.

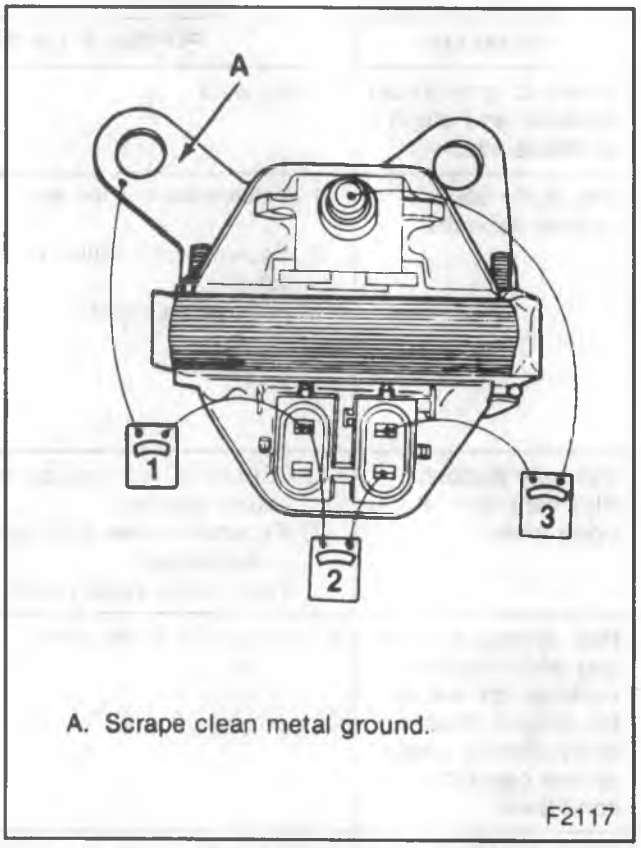

Figure 6—Testing the Ignition Coil

DISTRIBUTOR REPLACEMENT

Some components, such as the engine cover or air cleaner, may need to be removed to reach the distributor.

Remove or Disconnect

1. Negative battery cable.
2. Wiring harness connectors at the side of the distributor cap.
3. Distributor cap; move it out of the way.
   - Scribe a mark on the engine in line with the rotor.
   - Note the position of the distributor housing in relation to the engine.
4. Distributor hold-down bolt, washer (if used) and clamp.
5. Distributor.

Install or Connect

- To ensure correct timing of the distributor, it must be installed with the rotor correctly positioned. Refer to Step 3 of the removal procedure.
- If the distributor shaft won't drop into the engine, insert a screwdriver into the hole for the distributor and turn the oil pump driveshaft.

1. Distributor.
2. Hold-down bolt, washer (if used) and clamp.
3. Distributor cap.
4. Wiring harness connector at the side of the cap.
5. Negative battery cable.

COIL REPLACEMENT

Remove or Disconnect

1. Negative battery cable.
2. Engine control switch and tachometer connectors at the coil.
3. Coil to distributor lead at the coil.
4. Nuts holding the coil bracket and coil to the engine bracket.
5. Coil bracket and coil.
   - Drill and punch out the two rivets holding the coil to the bracket.
6. Coil from bracket.

Install or Connect

1. Coil to the bracket with two screws.
2. Coil bracket to the engine bracket with studs and nuts.
3. Coil to the distributor lead at the coil.
4. Engine control switch and tachometer connectors to the coil.
5. Negative battery cable.

IGNITION TIMING

1. Refer to the Vehicle Emissions Control Information label located on the radiator support. Follow all instructions on the label.
2. Refer to the Fuel and Emissions Service Manual for timing information.
3. With the engine control switch off, connect the pick-up lead of a timing light to the number 1 spark plug. Connect a jumper lead between the wire and plug or use an inductive type pick-up. DO NOT pierce the wire or attempt to insert a wire between the boot and the wire. Connect the timing light power leads according to the manufacturer's instructions.
4. Start the engine and aim the timing light at the timing mark (figures 7 and 8). The line on the balancer or pulley will line up at the timing mark. If a change is necessary, loosen the distributor hold-down clamp bolt at the base of the distributor. While observing the mark with the timing light, slowly rotate the distributor until the line indicates the correct timing. Tighten the hold-down bolt, and re-check the timing.
5. Turn off the engine and remove the timing light. Reconnect the test spark plug wire, if removed.

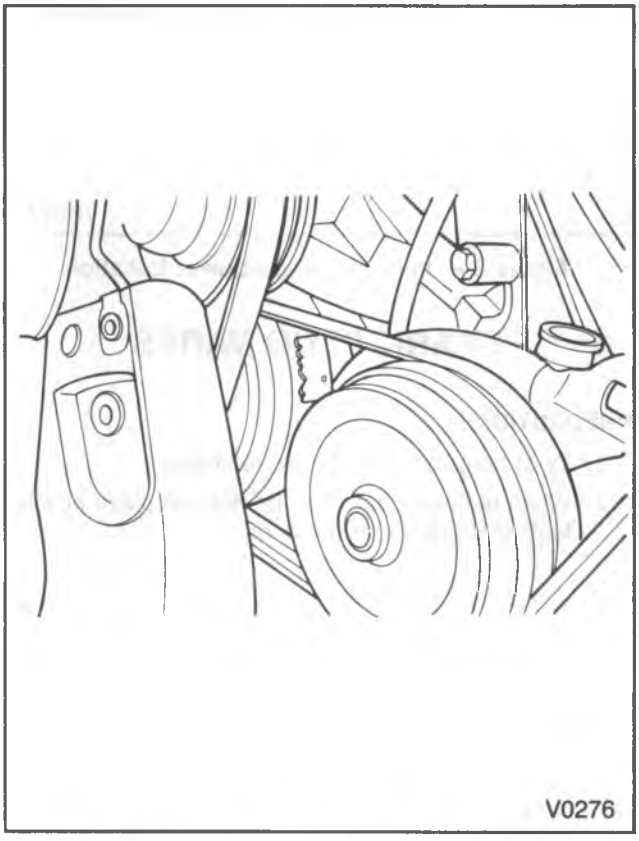

Figure 7—Timing Mark—Upper Location

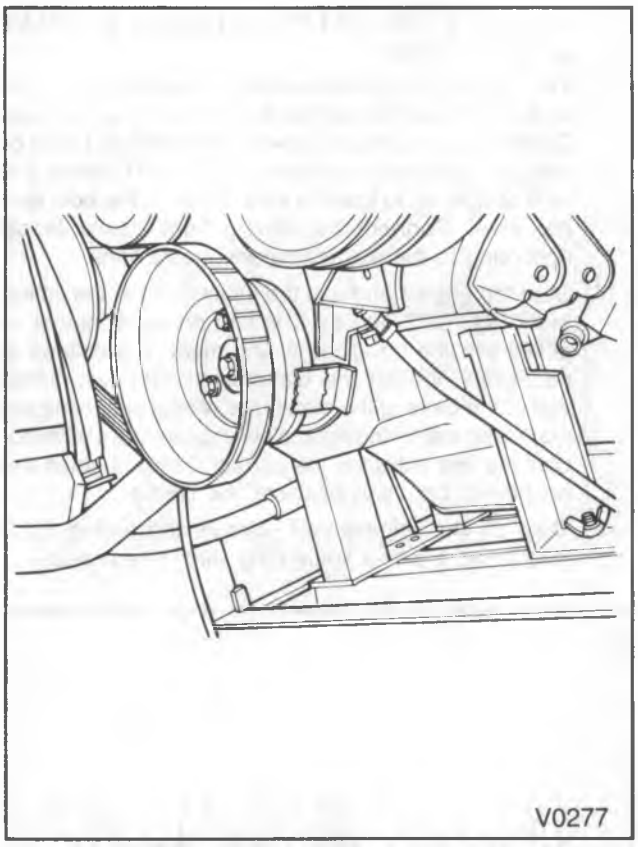

Figure 8—Timing Pointer—Lower Location

SPARK PLUG WIRES

PRECAUTIONS

1. Twist boots 1/2 turn before removing.
2. When removing the boot, do not use pliers or other tools that could tear the boot.
3. Do not force anything between the wire and the boot, or use a tool designed for this purpose.
4. Do not pull on the wires to remove the boot. Pull on the boot, or use a tool designed for this purpose.
5. Special care should be exercised when installing spark plug boots to assure that the metal terminal within the boot is fully seated on the spark plug terminal ant that the boot has not been moved on the wire. If boot to wire movement has occurred, the boot will give a false visual impression of being fully seated. A good check to assure that boots have been properly assembled is to push sideways on the installed boots. If they have been correctly installed, the boot will feel stiff, with only slight looseness. If the terminal has not been properly seated on the spark plug, only the resistance of the rubber boot will be felt when pushing sideways.

SPARK PLUG WIRE REPLACEMENT

Wire routings must be kept intact during service. When wires have been disconnected, or when replacement of the wires is necessary, specified routing must be followed precisely. Failure to route the wires properly can lead to radio ignition noise and crossfiring of the plugs, or shorting of the leads to ground. For the correct wiring routing for each engine, refer to figures 9 through 16.

Some distributors have spark plug wire retainer harness assemblies with the engine firing order marked on them. If the firing order is not indicated, install the plug wires as shown. When the wiring is completed, the plug wire from cylinder number 1 should lead to the distributor tower at the front and on the same side of the engine as cylinder number 1. The plug wire from cylinder number 6 (in 6 cylinder engines) or from cylinder number 8 (in V8 engines) should lead to the distributor tower at the front of the engine next to the number 1 tower.

Be sure to position all plug boots perpendicular to the centerline of the engine.

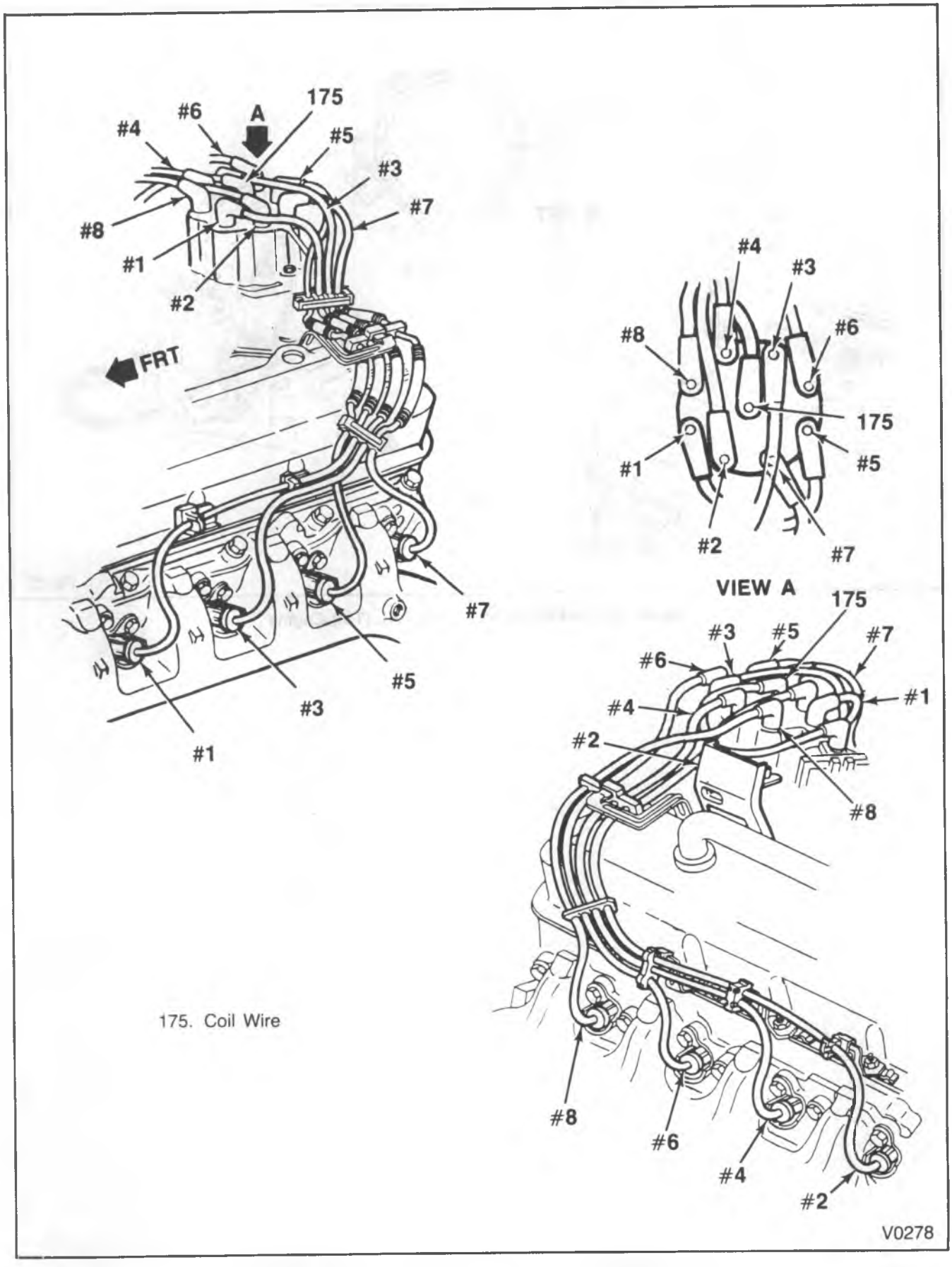

175. Coil Wire

Figure 9—Spark Plug Wire Routing for the 7.4L (TBI) Engine—P

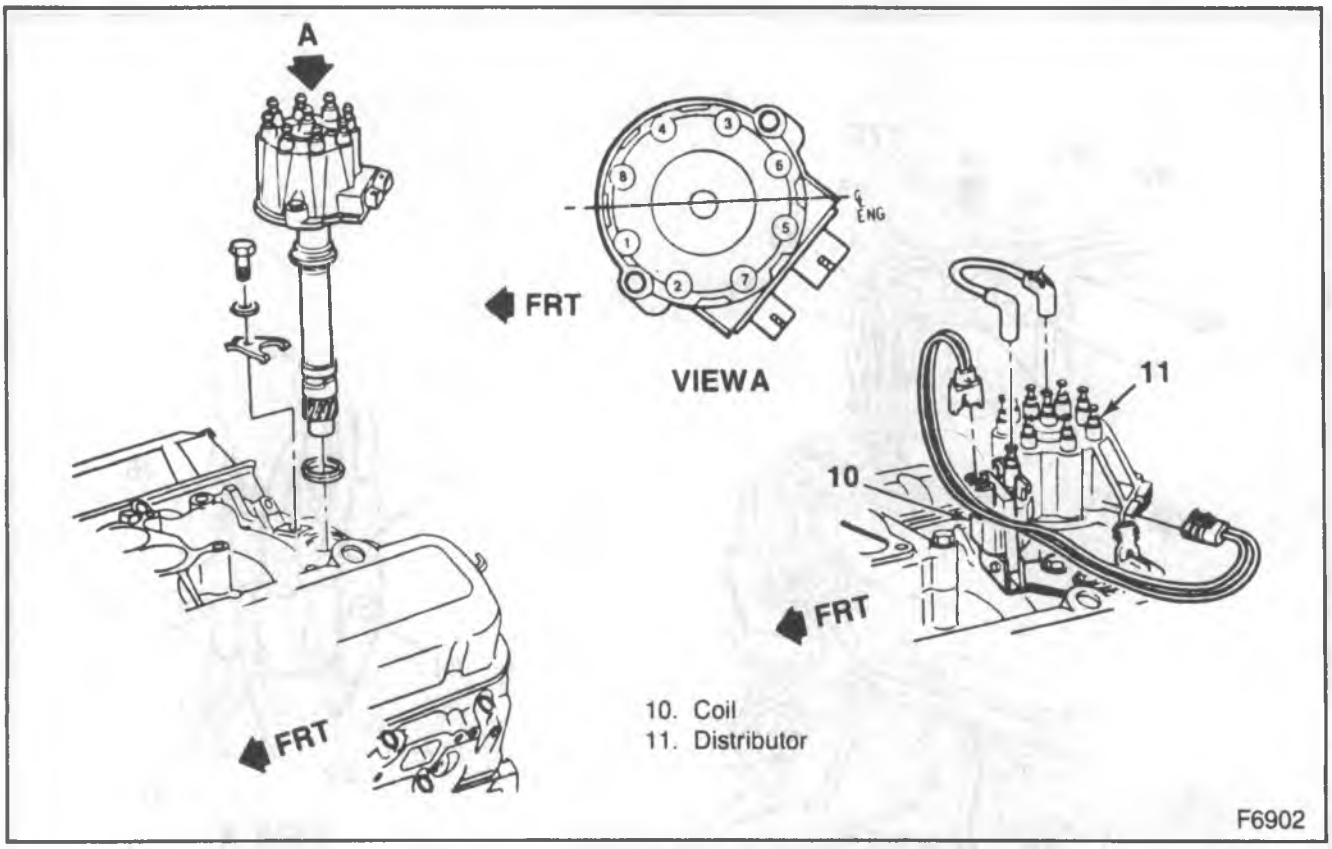

Figure 10—Distributor and Coil—7.4L (TBI) Engine

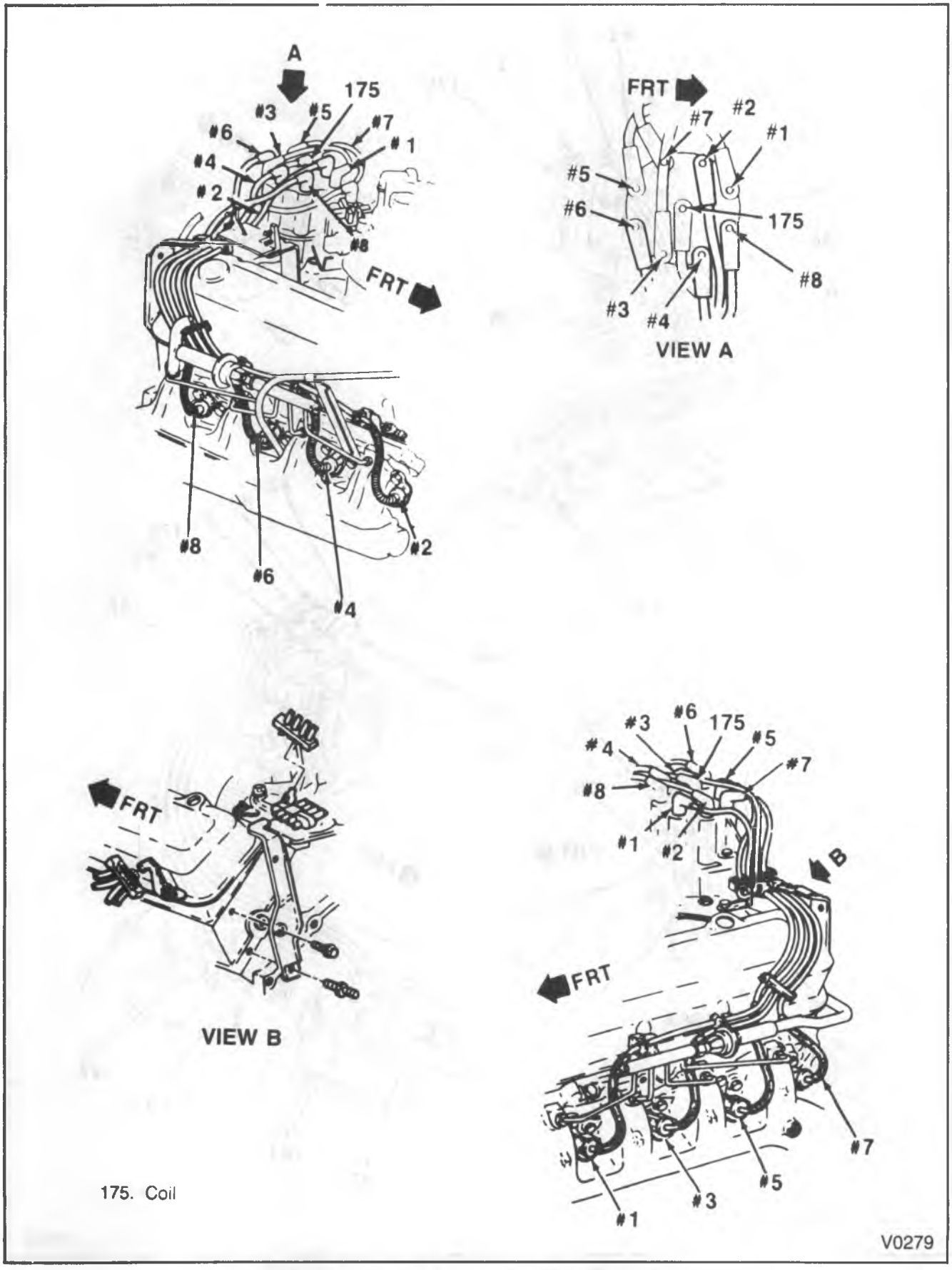

Figure 11—Spark Plug Wire Routing for the 7.4L (TBI) Engine—R/V

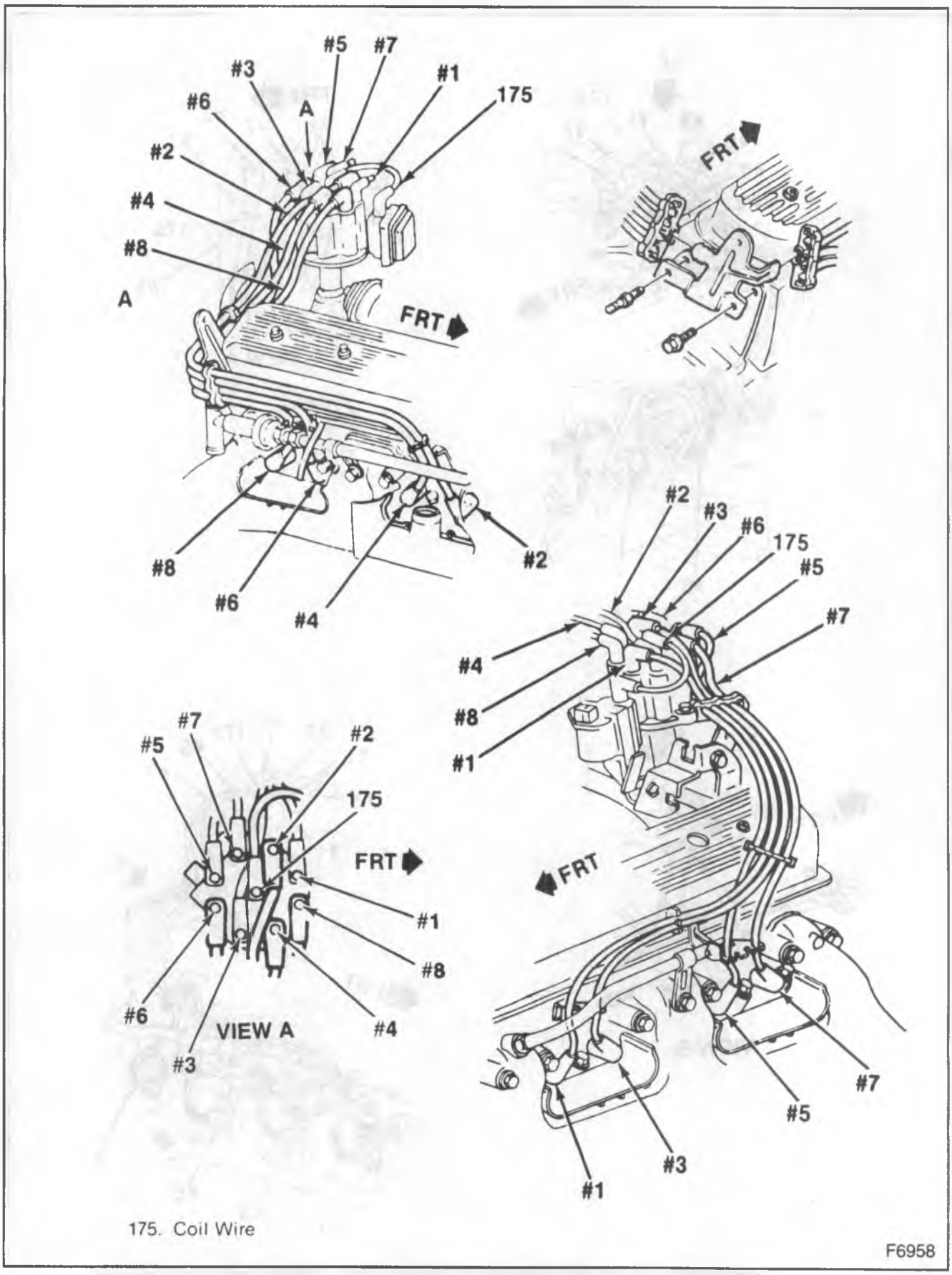

Figure 12—Spark Plug Wire Routing for the 5.7L (TBI) Engine—P

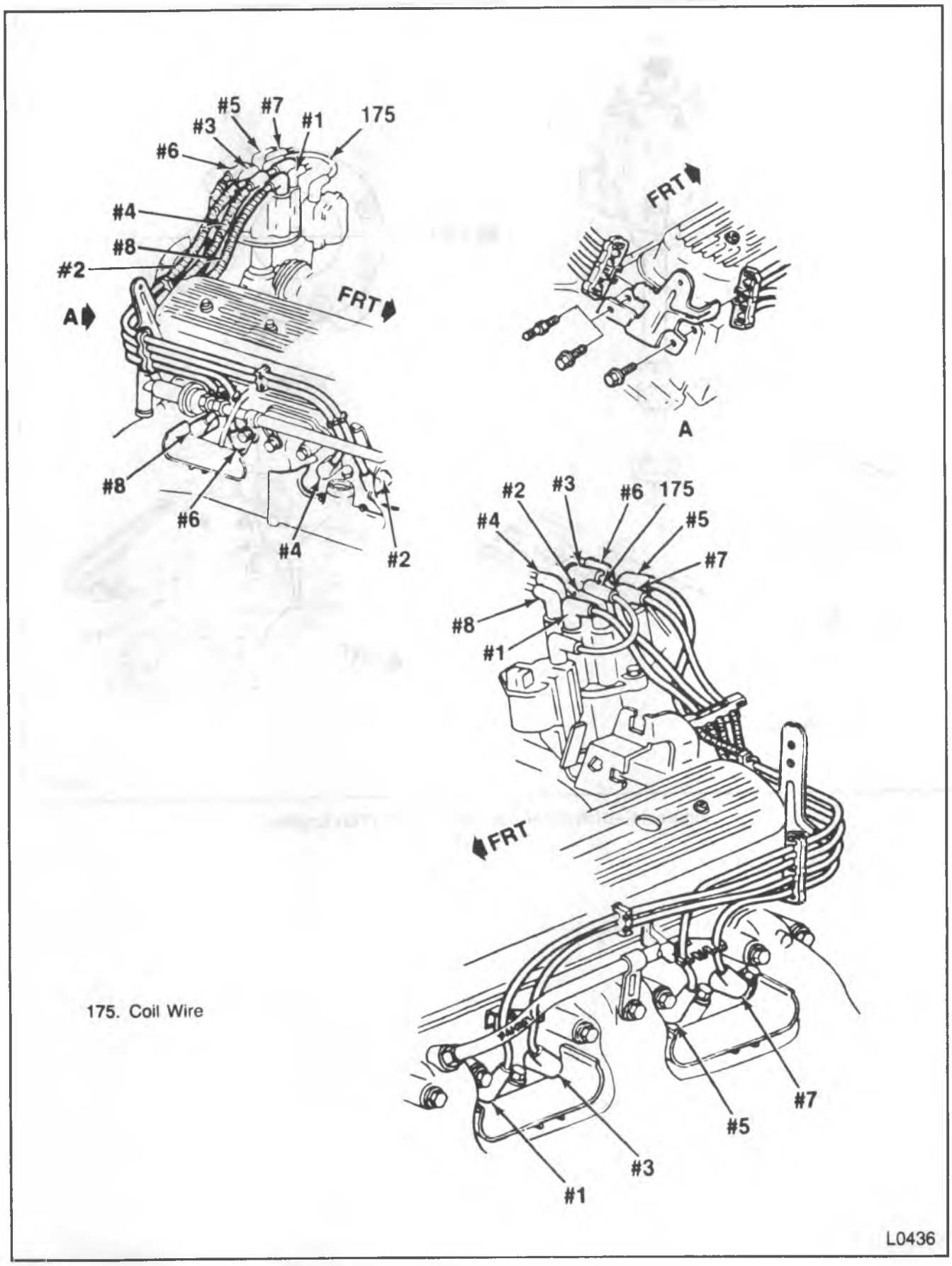

Figure 13—Spark Plug Wire Routing for the 5.7L (TBI) Engine—R/V

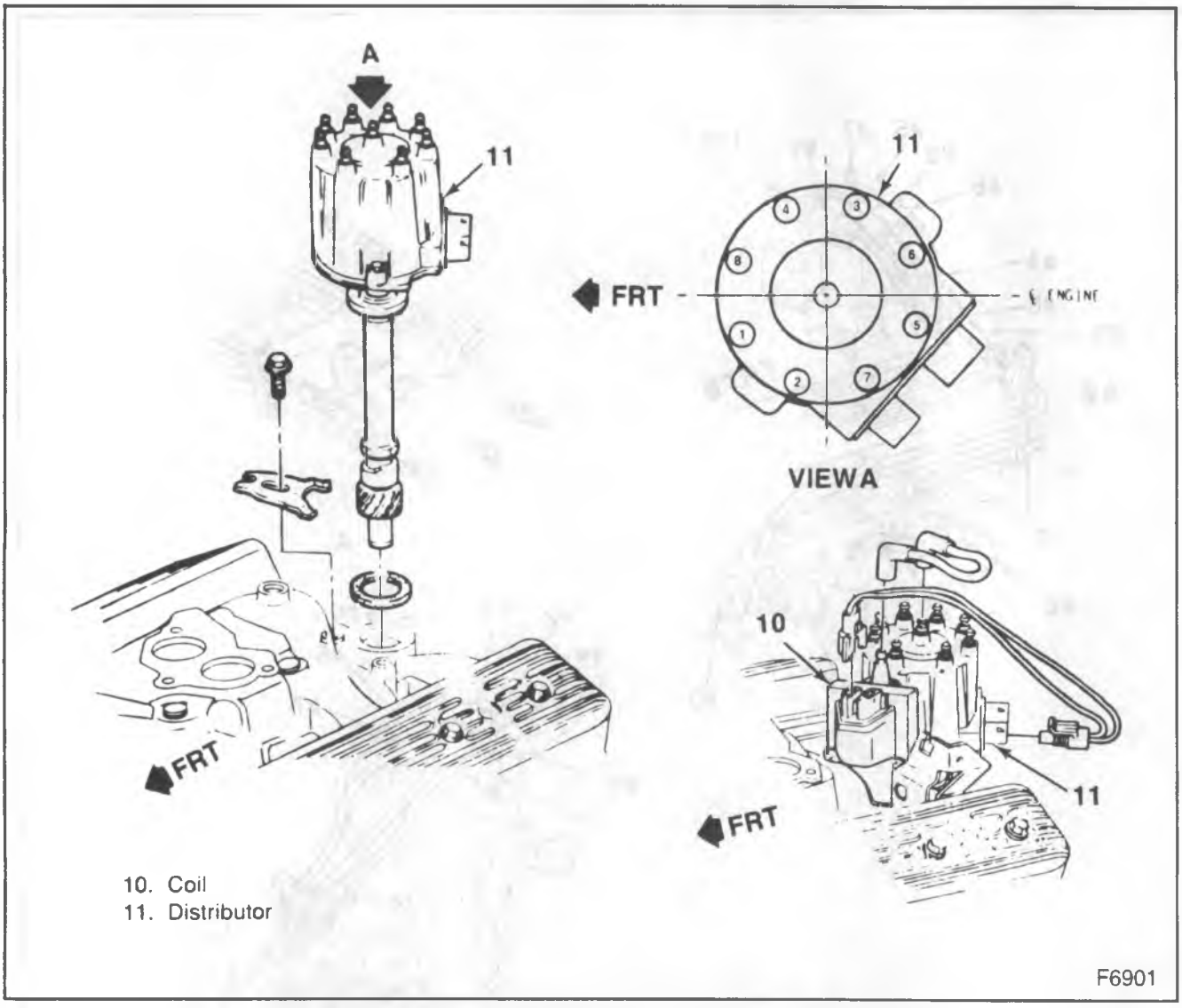

Figure 14—Distributor and Coil — 5.7L (TBI) Engine

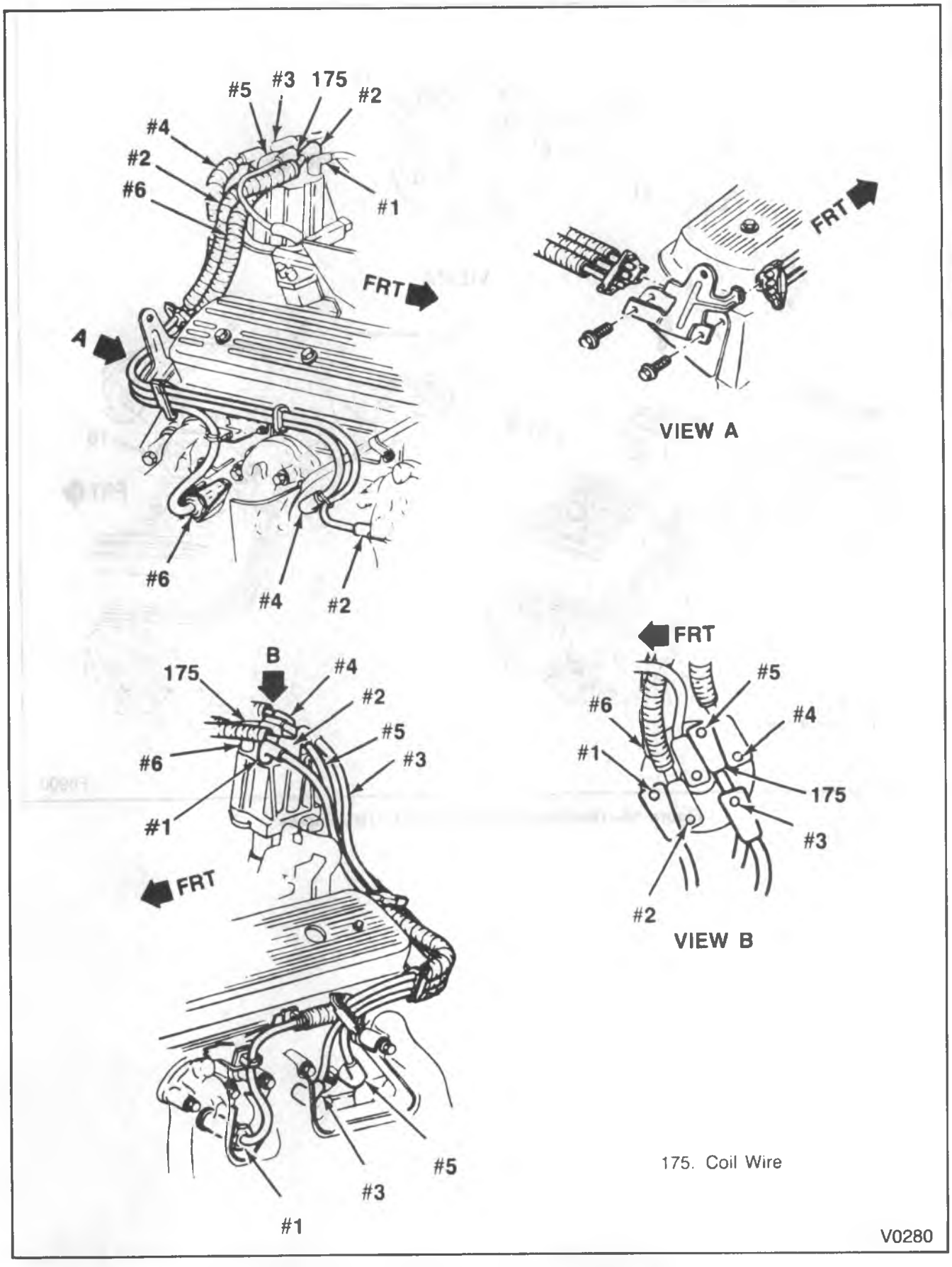

Figure 15—Spark Plug Wire Routing for the 4.3L (TBI) Engine—P

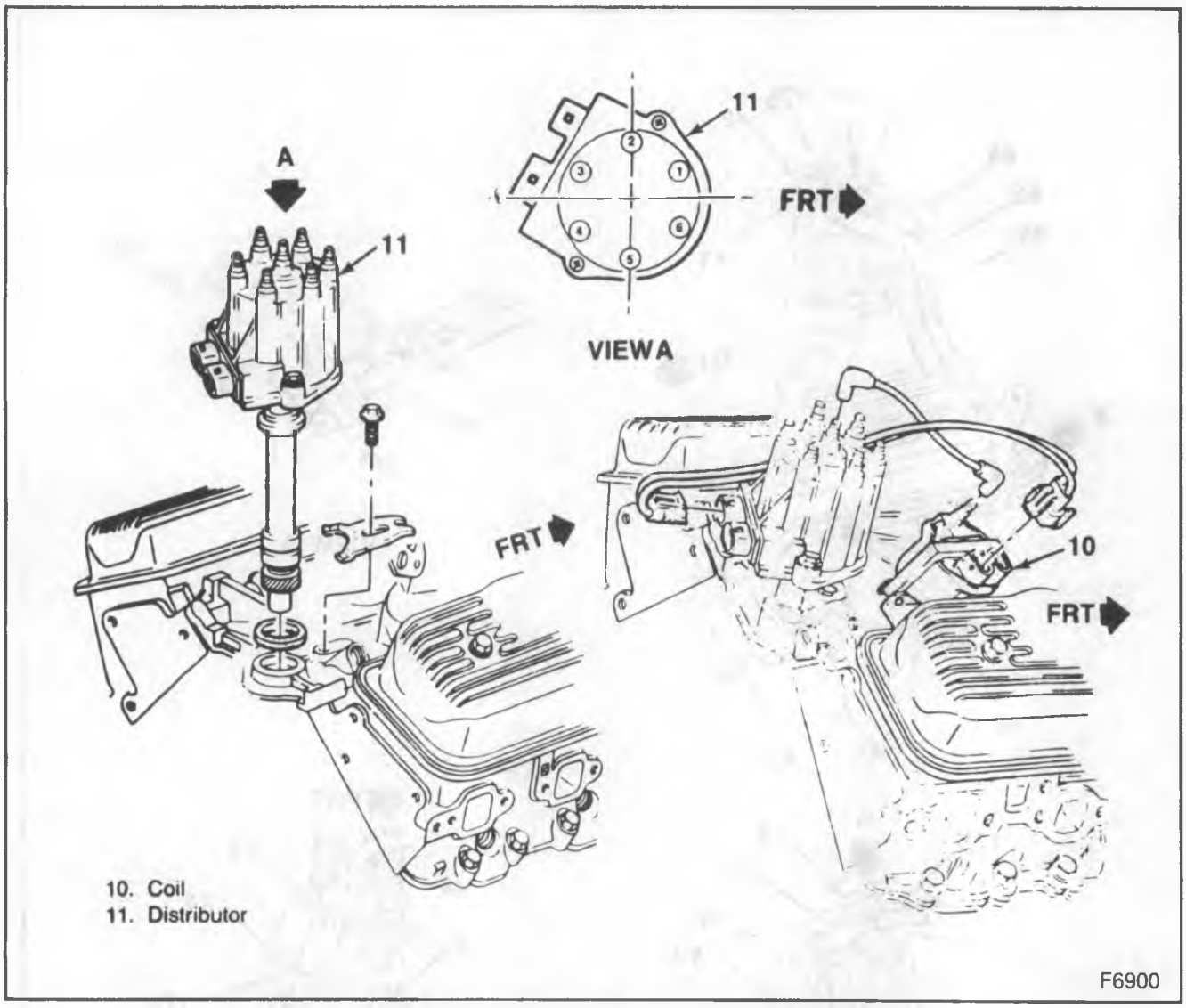

Figure 16—Distributor and Coil—4.3L (TBI) Engine

SPECIFICATIONS

SPARK PLUGS

Engine	Plug	Gap (Inch)	Torque	
			N·m	Ft. Lbs.
4.3L	•CR43TS	0.035	15	11
5.0L	•CR43TS	0.035	15	11
5.7L	•CR43TS	0.035	15	11
7.4L	•CR43TS	0.035	15	11

TB-3117-2A

PARTS INFORMATION

PART NAME	GROUP
Distributor Cap	2.367
Pickup Coil	2.372
Distributor Gear	2.374
Distributor Module	2.383
Spark Ignition Plug (Kit)	2.270
Spark Plug Wire	2.240
Distributor	2.361

GMTB-3189-2A

SECTION 6D5

ENGINE BLOCK HEATERS

NOTICE: When fasteners are removed, always reinstall them at the same location from which they were removed. If a fastener needs to be replaced, use the correct part number for that application. If the correct part number fastener is not available, a fastener of equal size and strength (or stronger) may be used. Fasteners that are not reused, and those requiring thread locking compound will be called out. The correct torque value must be used when installing fasteners that require it. If the above conditions are not followed, parts or system damage could result.

CONTENTS

SUBJECT	PAGE
Description	6D5-1
On-Vehicle Service	6D5-1

ENGINE BLOCK HEATERS

DESCRIPTION

The optional engine block heater is used to preheat engine coolant for cold weather starting. The unit consists of a heating coil that fits into the engine block. It has an attached electrical cord with a plug. If the element fails to heat the coolant, check the cord and connections before replacing the element.

ON-VEHICLE SERVICE

REMOVAL

Remove or Disconnect

1. Coolant. Refer to ENGINE COOLING (SEC. 6B1).
2. Plug end from the heater.
   - Loosen the bolt/screw.
3. Heater from the engine block.

INSTALLATION (Figures 1, 2 and 3)

1. Apply a coating of lubricant to the O-ring and to the cleaned surface of the plug opening in the block.
2. Install the hairpin end of the heating coil into the opening and push the support in as far as it will go.
3. Position the block heater as shown for the engine in figure 2 or 3.

Tighten

- Bolt/screw to 1.8 N•m (16 in. lbs.).

4. Route the heater cord so that it does not touch the engine, hot pipes, manifold, or any moving parts. Refer to figures 4, 5, 7, 8 and 9.
5. Coolant. Refer to ENGINE COOLING (SEC. 6B1).

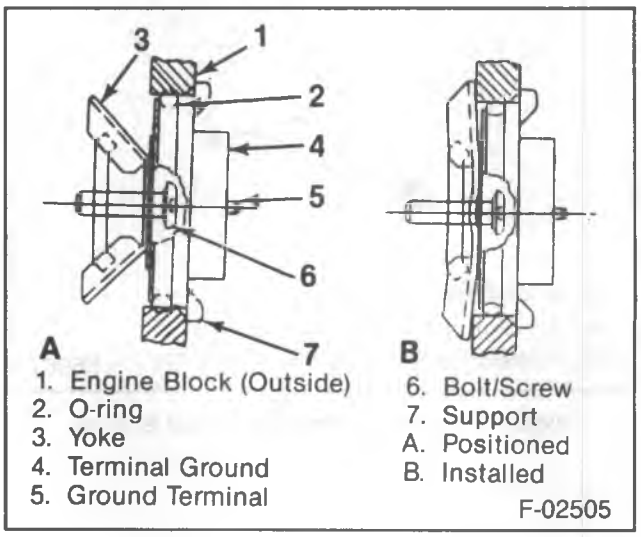

Figure 1—Engine Block Heater

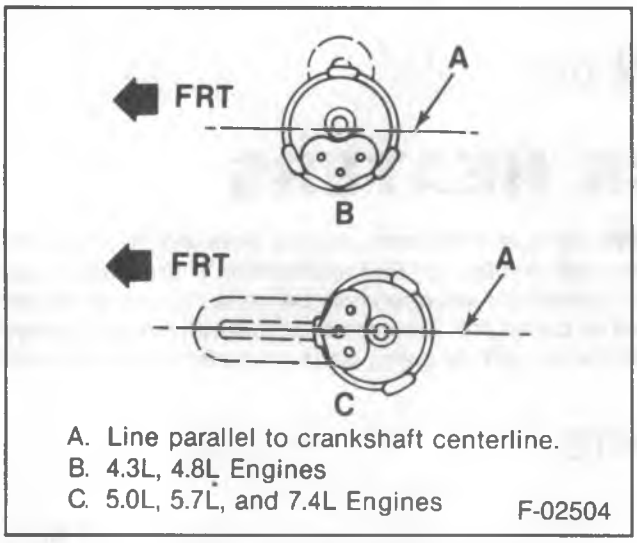

Figure 2—Element Position-Gas Engine

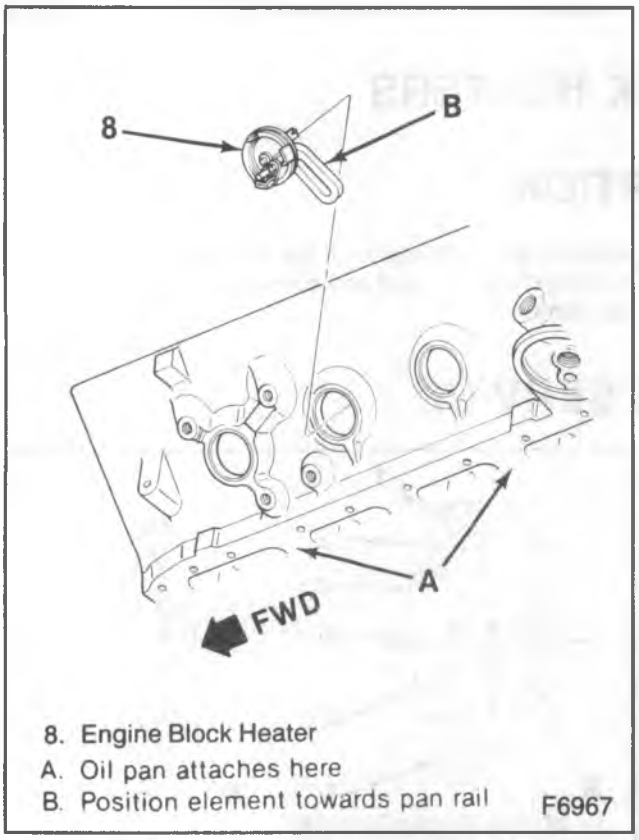

Figure 3—Element Position-Diesel Engine

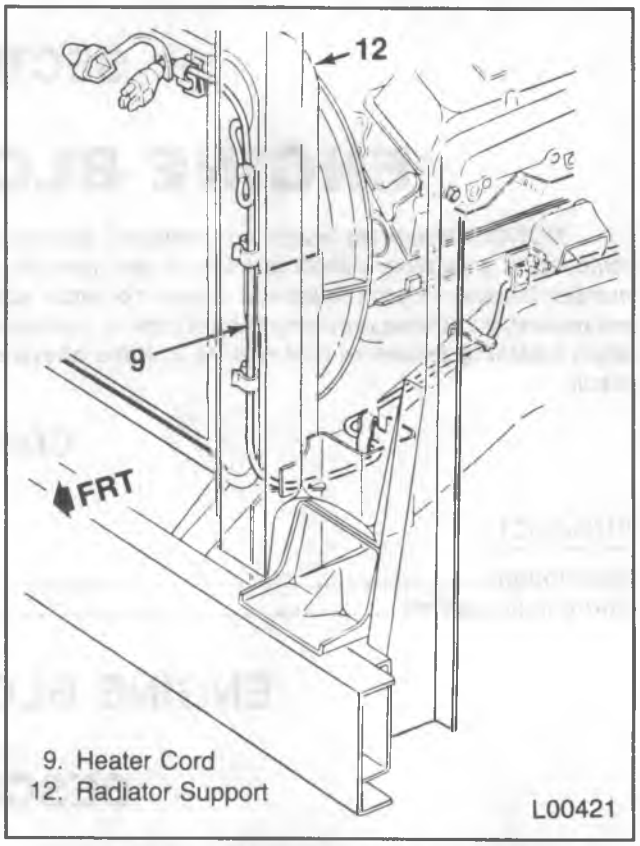

Figure 4—Heater Cord Routing (P3)

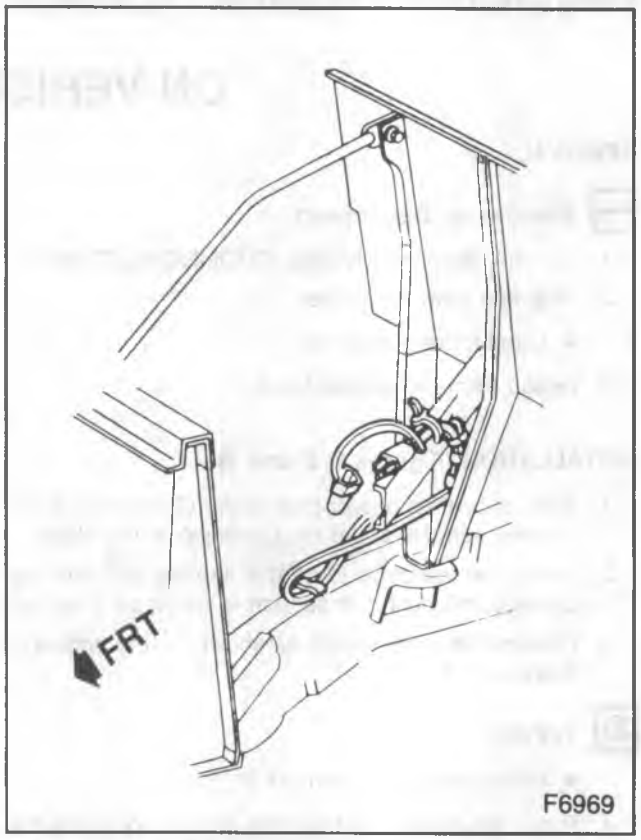

Figure 5—Heater Cord Routing (P3)

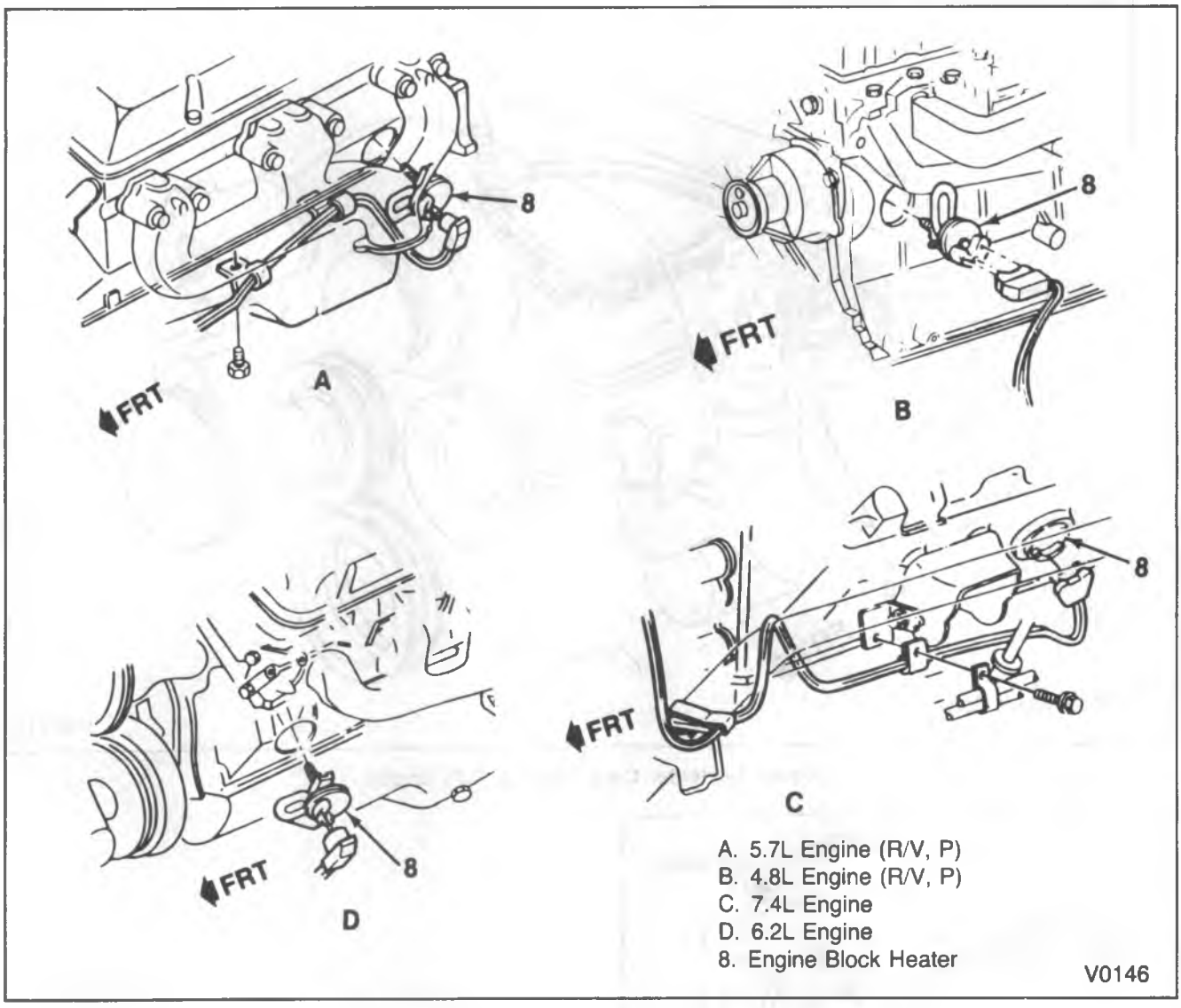

Figure 6—Heater Location

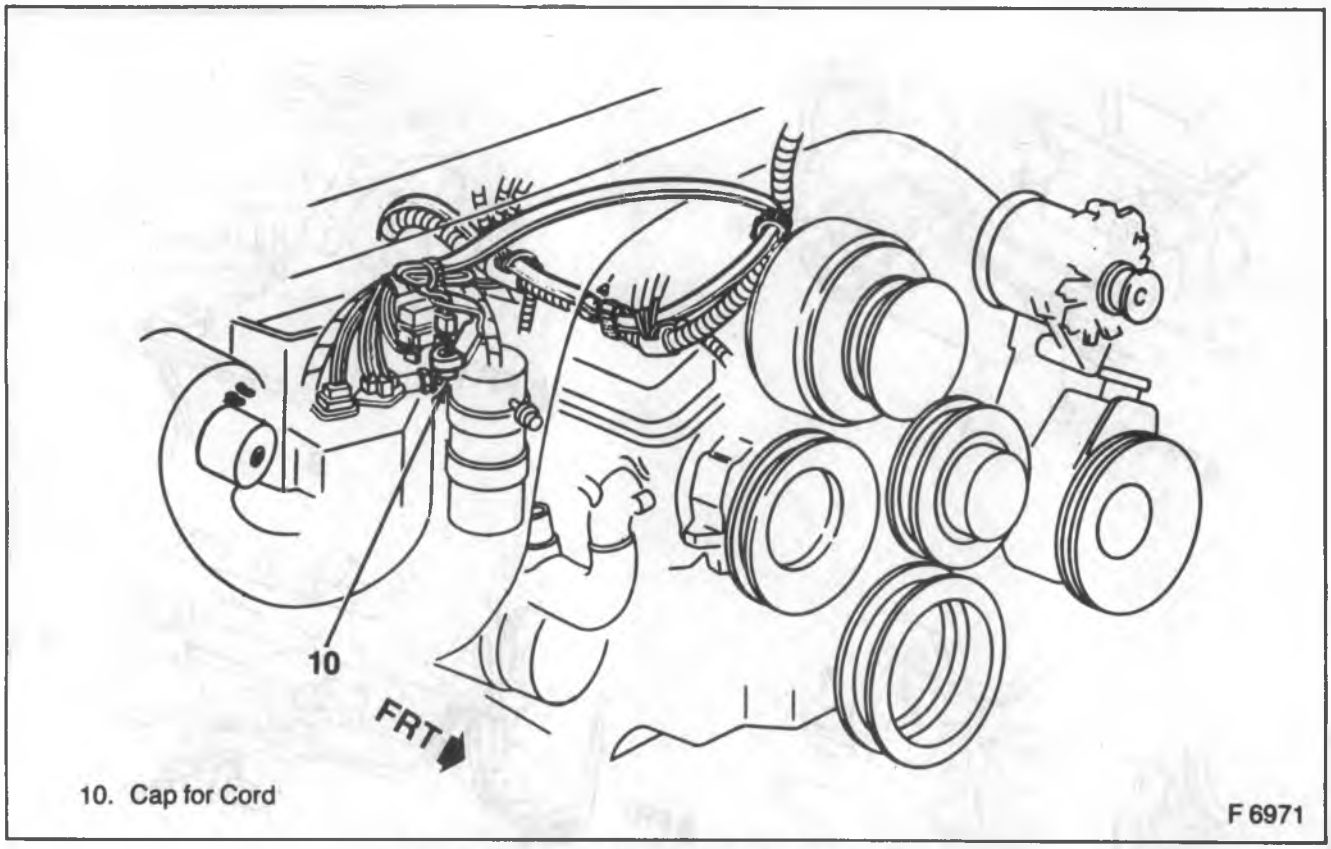

Figure 7—Heater Cord Routing, 4.3L Engine

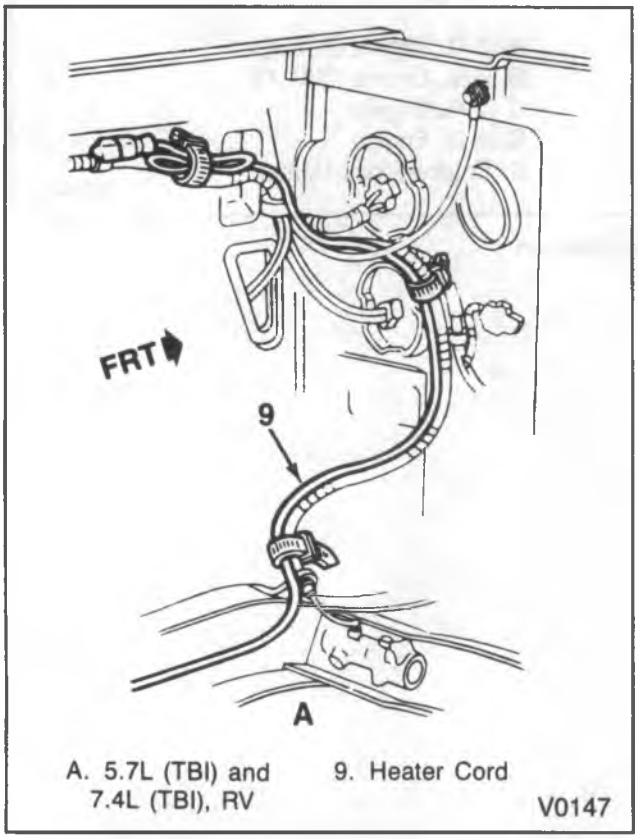

Figure 8—Heater Cord Routing, 5.0L, 5.7L, 7.4L Engines

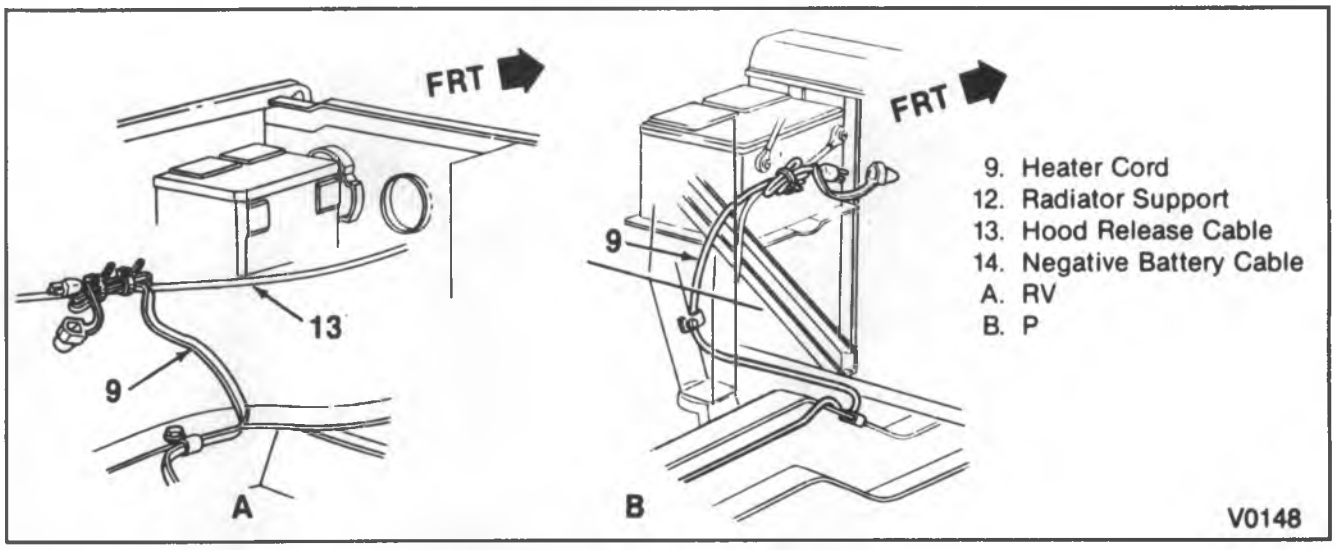

Figure 9—Heater Cord Routing, 6.2L (P)

SECTION 6D6

DIESEL GLOW PLUG ELECTRICAL SYSTEM

NOTICE: When fasteners are removed always reinstall then at the same location from which they were removed. If a fastener needs to be replaced, use the correct part number fastener for that application. If the correct part number fastener is not available, a fastener of equal size and strength (or stronger) may be used. Fasteners that are not reused, and those requiring thread locking compound will be called out. The correct torque value must be used when installing fasteners that require it. If the above conditions are not followed, parts or system damage could result.

CONTENTS

SUBJECT	PAGE
Description	**6D6-1**
Glow Plugs	**6D6-1**
Instrumentation	**6D6-1**
Electronic Controller/Glow Plug Relay Assembly	**6D6-2**
Circuit Operation	**6D6-2**
Diagnosis	**6D6-3**
Circuit Check	**6D6-3**
Glow Plug System	**6D6-3**
Glow Plug Afterstart	**6D6-4**
On-Vehicle Service	**6D6-4**
Glow Plug	**6D6-4**
Specifications	**6D6-7**

DESCRIPTION

In the diesel engine, air alone is compressed in the cylinder, then after the air has been compressed a charge of fuel is sprayed into the cylinder and ignition occurs due to the heat of compression. Eight glow plugs are used to preheat the chamber as an aid to starting (figure 1).

The glow plug system for the LL4 (heavy duty emissions) version of the 6.2L engine is different from that for the LH6 (light duty emissions) version.

The system for the LL4, described in this section, consists of an integral-electronic control/glow plug relay assembly, 6-volt glow plugs, and a GLOW PLUGS lamp.

The system for the LH6 has the same glow plugs, glow plug controller and GLOW PLUGS lamp. Glow plug temperature inhibit is controlled by the ECM (computer) which receives temperature information from the coolant temperature sensor, located in the water crossover on the engine. The computer sends a voltage signal to the cold advance relay and the ignition circuit to the glow plug controller. The relay is located at the junction block in the engine compartment on the right side of the cowl.

For diagnosis information on the computer controlled system, refer to DIESEL EMISSIONS (SEC. 6E2), in this manual.

GLOW PLUGS

These are 6-volt heaters (operated at 12 volts) that turn on when the engine control switch is turned to the run position prior to starting the engine. They remain pulsing a short time after starting, then automatically turn off.

INSTRUMENTATION

Vehicles with the diesel engine have special instrumentation indicators to permit the operator to properly apply the starting procedure. A GLOW PLUGS lamp on the instrument panel provides this information on engine staring conditions.

Vehicles equipped with diesel engines have a WATER IN FUEL lamp and LOW COOLANT lamp. Refer to the engine fuel and engine cooling sections for information on these systems.

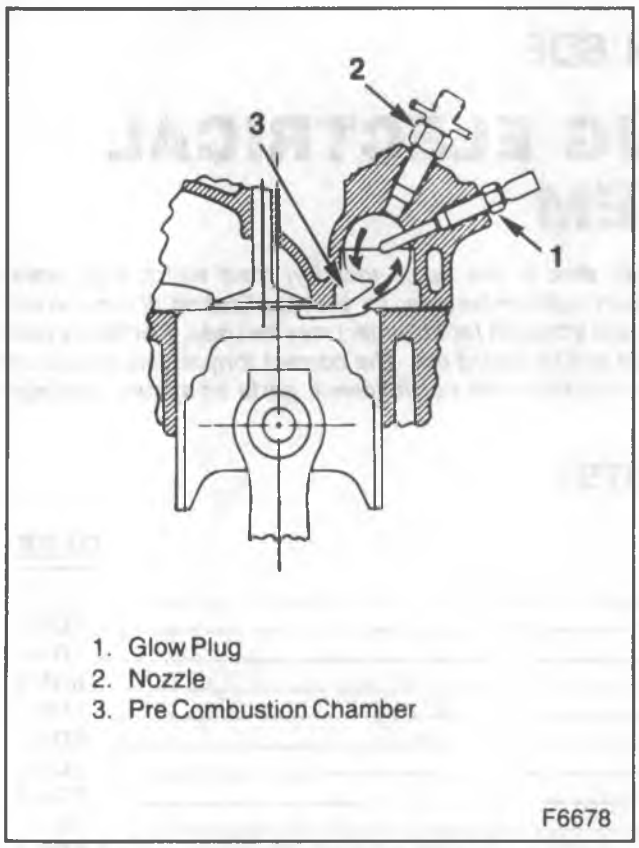

Figure 1—Diesel Engine Glow Plug Location

ELECTRONIC CONTROLLER/GLOW PLUG RELAY ASSEMBLY (Figures 2 and 3)

The assembly contains the circuitry which monitors and controls glow plug relay operation. Information received at pins B and C is used by the controller to determine glow plug operating requirements. Pin B senses voltage at the starting motor solenoid. Pin C senses glow plug voltage through the glow plug inhibit switch which is wired in series with the glow plug voltage sense lead to the glow plugs. The controller is mounted at the rear of the left cylinder head on two 10 mm studs.

CIRCUIT OPERATION

A normally functioning system operates as follows:

A. Key on—Engine not running and at room temperature.
   1. Glow plugs ON for 4 to 6 seconds, then OFF for about 4.5 seconds.
   2. Then cycle; ON for about 1.5 seconds, OFF for about 4.5 seconds, and continue to cycle 1.5 ON/4.5 OFF, for a total duration (including the initial 4 to 6 seconds) for about 20 seconds.

B. If the engine is cranked during or after the above sequence, the glow plugs will cycle ON/OFF for a total duration of 25 seconds after the engine control switch is returned from the crank position, whether the engine starts or not. The engine does not have to be running to terminate the glow plug cycling.

All the times shown above are approximately because they vary with initial engine temperature. The initial ON time and cycling ON/OFF times vary also with system voltage and/or temperature. Lower temperatures cause longer duration of cycling.

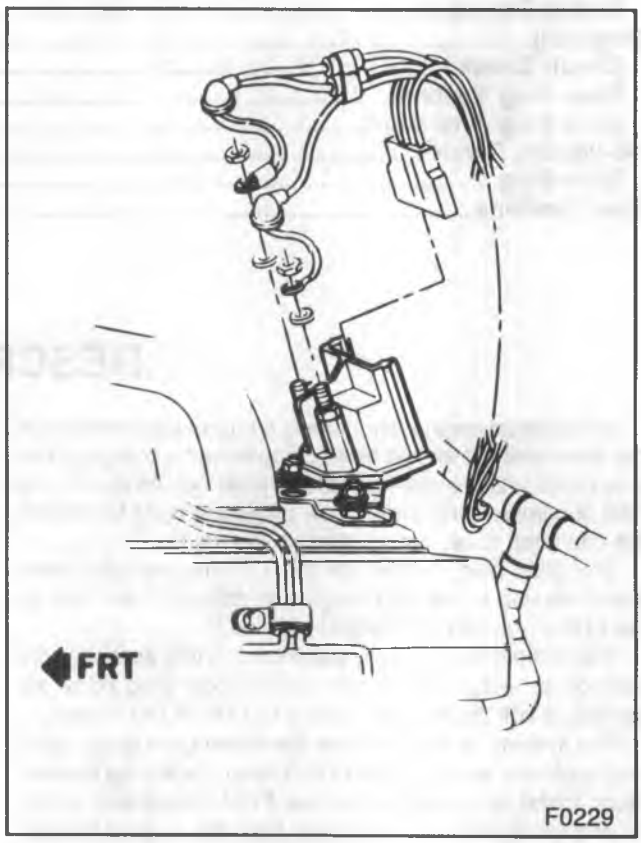

Figure 2—Glow Plug Controller

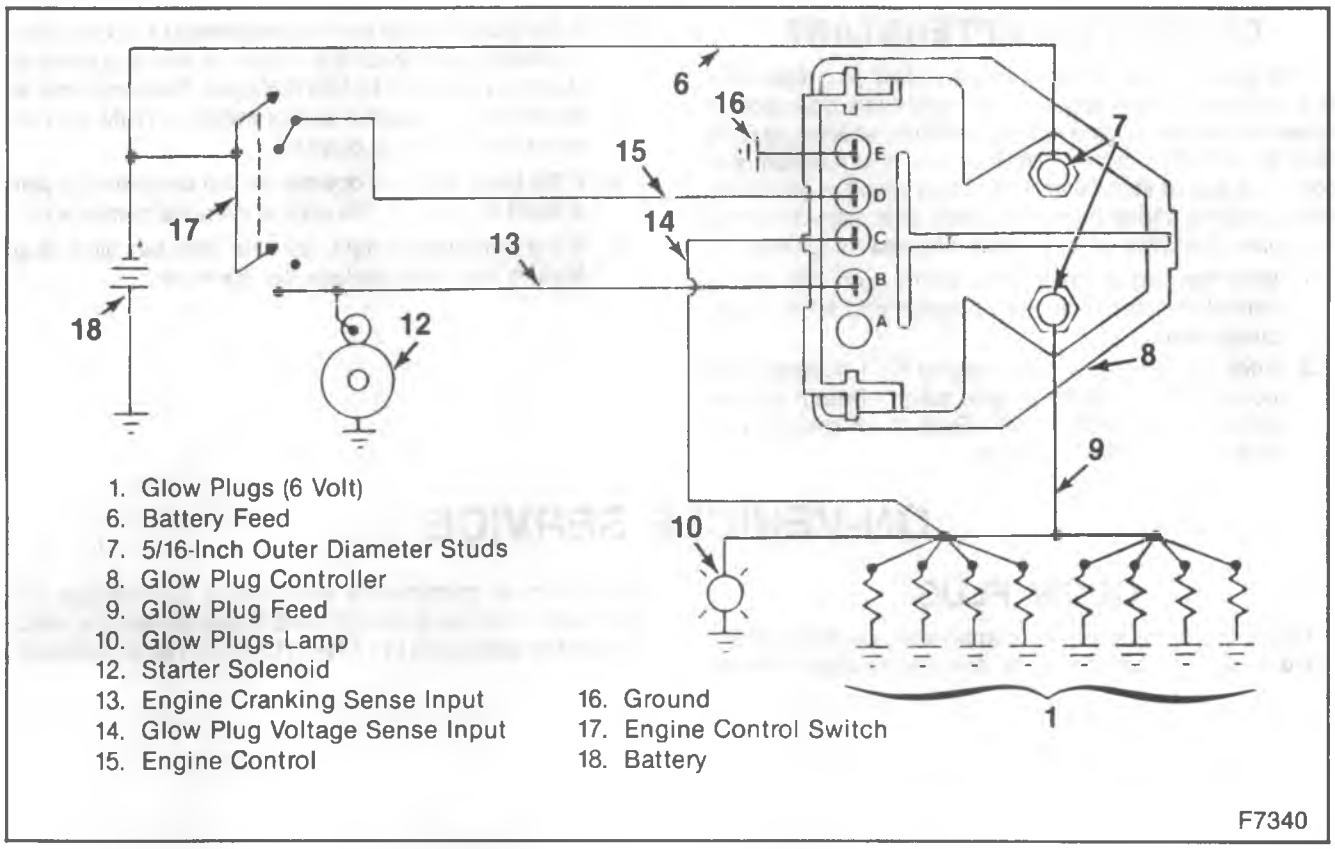

Figure 3—Electronic Glow Plug System, LL4 Engine

DIAGNOSIS

CIRCUIT CHECK

If the system does not operate as described, check the following:

Inspect

1. All connectors
2. Engine harness ground connection to the engine.

   Tighten

   - Nut to 11 N•m (8 ft. lbs.)
3. Four-wire connector at controller. It must be fully seated and latched.
4. Both controller copper stud upper nuts.

   Tighten

   - (Nuts to 5 N•m (48 in. lbs.)
   - Do not tighten lower nuts.
5. GLOW PLUGS lamp on instrument panel for tight connection and operation.

GLOW PLUG SYSTEM

If all connections are intact, but the glow plug system does not operate as stated, do the system diagnosis shown in figure 4. It provides a fast way to find if the glow plug system is working properly. Use this procedure whenever there is doubt about correct system operation. Then refer to the diagnosis chart in figure 5 to pinpoint the condition.

NOTICE: Do not apply battery voltage to the two controller studs since jump starting the controller could damage the glow plugs.

GLOW PLUG AFTERSTART

The glow plug controller provides glow plug operation after starting a cold engine. This after-start operation is initiated when the engine control switch is returned to RUN from the START position. While loss of this function may not cause a cold start complaint, it may result in excessive white smoking and/or poor idle quality after start. To check for proper operation of this circuit proceed as follows:

1. With the engine cold 27°C (80°F), turn the engine control switch to the RUN position and let the glow plugs cycle.
2. After 2 minutes crank the engine for 1 second. (It is not important that the engine starts.) Return the engine control switch to RUN. Glow plugs should cycle at least once after cranking.
3. If the plugs do not turn on, disconnect the controller connector, and check the connector harness terminal B with a grounded 12-volt test lamp. The lamp should be off with the engine control switch in RUN, and on when the engine is cranked.
4. If the lamp does not operate as just described, repair a short or open in the engine harness purple wire.
5. If the lamp works right, but the afterstart glow plug feature does not, replace the controller.

ON-VEHICLE SERVICE

GLOW PLUG

Check the system and its components on the vehicle. None of the components are serviceable. When installing new components and making connections, be sure that connections are tight and torque values are used. Torque the glow plugs to 17 N•m (13 ft. lbs.) when installed.

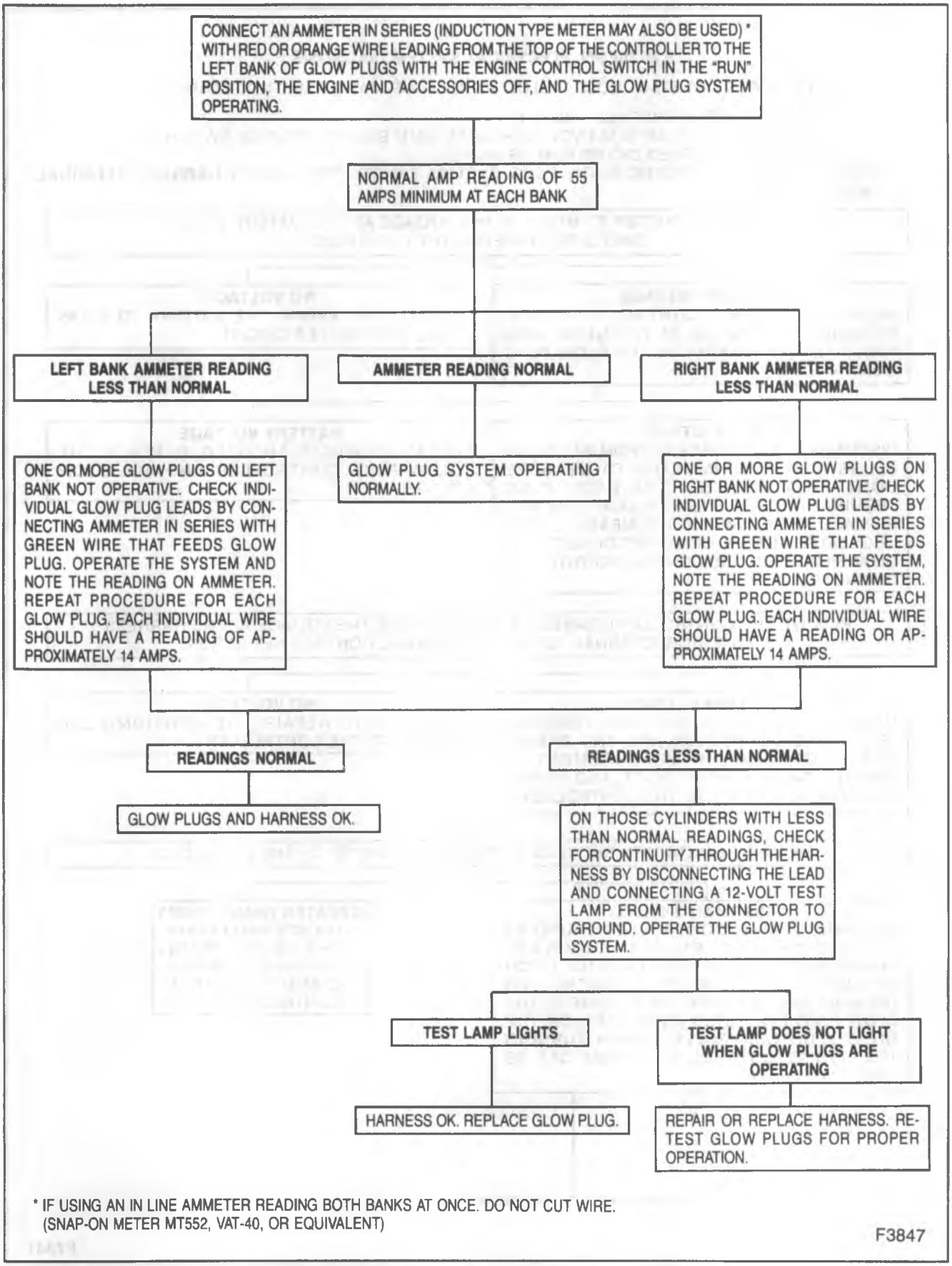

Figure 4—Preliminary Diagnosis with an Ammeter

6.2L DIESEL ELECTRICAL SYSTEM DIAGNOSIS

ENGINE DOES NOT START COLD - "GLOW PLUG" LAMP MAY OR MAY NOT COME ON.

1. FUEL SYSTEM CHECKED AND IS OK.
2. BATTERY VOLTAGE IS 12.4 VOLTS OR MORE WITH ENGINE CONTROL SWITCH OFF.
3. CRANKING SPEED OK (100 RPM OR MORE).
4. REFER TO THE ELECTRONIC GLOW PLUG SYSTEM FIGURE FOR WIRING HARNESS TERMINAL IDENTIFICATION.

USE A VOLTMETER TO MEASURE THE VOLTAGE AT THE BATTERY STUD (SINGLE RED WIRE) ON THE GLOW PLUG.

BATTERY VOLTAGE
WITH THE ENGINE CONTROL KEY OFF, MEASURE THE VOLTAGE AT THE GLOW PLUG FEED STUD (TWIN LEAD) ON THE GLOW PLUG CONTROLLER.

NO VOLTAGE
LOCATE AND REPAIR THE BATTERY TO GLOW PLUG CONTROLLER CIRCUIT.

NO VOLTAGE
DISCONNECT THE HARNESS FROM ALL GLOW PLUGS. USE AN OHMMETER TO MEASURE CONTINUITY BETWEEN THE GLOW PLUG TERMINAL AND THE ENGINE BLOCK (GROUND). REPLACE THE GLOW PLUG IF MEASUREMENT IS GREATER THAN 2 OHMS. RECONNECT ALL GLOW PLUGS BEFORE CONTINUING WITH THE DIAGNOSIS.

BATTERY VOLTAGE
RELAY CONTACTS SHORTED. REPLACE THE GLOW PLUG CONTROLLER AND ALL GLOW PLUGS.

REMOVE THE CONTROLLER CONNECTOR AND MEASURE THE VOLTAGE AT THE HARNESS CONNECTOR TERMINAL "D" WITH THE ENGINE CONTROL KEY IN RUN.

IGNITION VOLTAGE
MEASURE CONTINUITY BETWEEN TERMINAL "E" OF THE CONNECTOR AND THE ENGINE BLOCK (GROUND). IF MEASUREMENT IS GREATER THAN 1 OHM, LOCATE AND REPAIR THE GROUND CIRCUIT TO THE CONTROLLER.

NO VOLTAGE
LOCATE AND REPAIR THE IGNITION FEED CIRCUIT TO THE CONTROLLER.

MEASURE CONTINUITY BETWEEN TERMINALS "C" and "E" OF THE CONNECTOR.

LESS THAN 2 OHMS
RECONNECT THE CONTROLLER HARNESS CONNECTOR AND ENSURE COMPLETE ENGAGEMENT (CONNECTOR LOCKING LATCH SHOULD "CLICK" OVER THE CONTROLLER LOCKING TAB). MEASURE THE VOLTAGE AT THE GLOW PLUG FEED STUD (TWIN LEAD) ON THE GLOW PLUG CONTROLLER WHEN TURNING THE ENGINE CONTROL KEY FROM OFF TO RUN.

GREATER THAN 2 OHMS
LOCATE AND REPAIR THE GLOW PLUG VOLTAGE SENSE CIRCUIT TO THE CONTROLLER.

(continued on next page)

F7341

Figure 5—Diesel Electrical System Diagnosis (LL4 Engine)

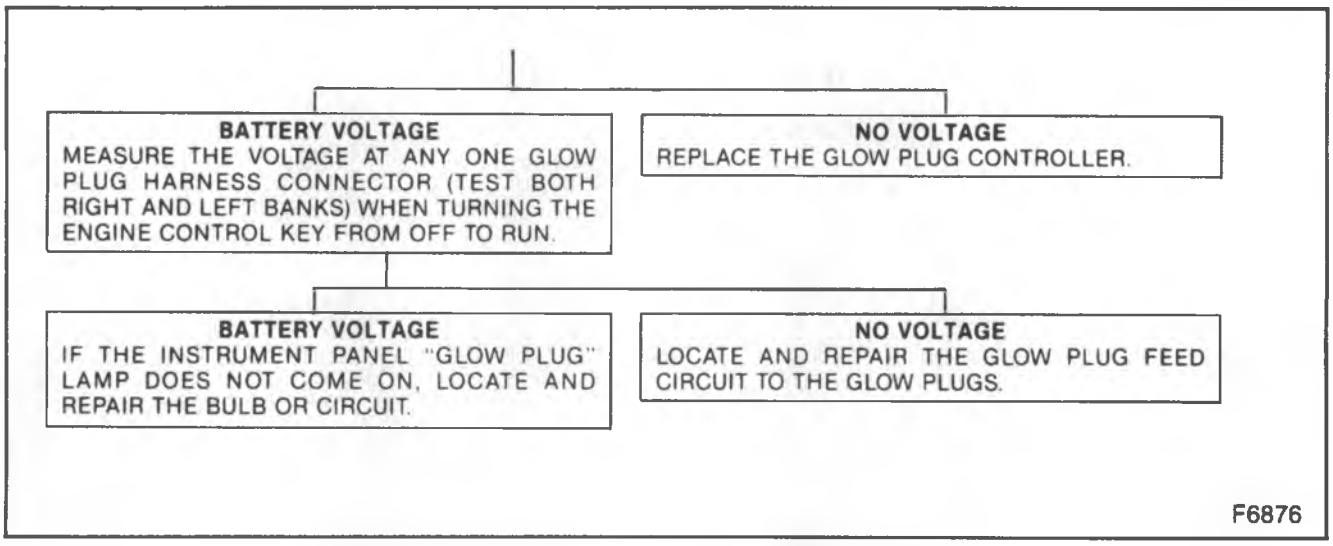

Figure 6—Diesel Electrical System Diagnosis (LL4 Engine)

SPECIFICATIONS

	N·m	Ft. Lbs.	In. Lbs.
Glow Plug Controller Nuts	5	—	48
Glow Plugs	17	13	—

T2241

SECTION 6D7

ENGINE WIRING

When it is necessary to move any of the wiring, whether to lift wires away from their harnesses or move harnesses to reach some component, take care that all wiring is replaced in its original position and all harnesses routed correctly. If clips or retainers break, replace them. Electrical problems can result from wiring or harnesses becoming loose and moving from their original positions, or from being rerouted. Refer to figures 1 through 21 for the correct routing of engine wiring.

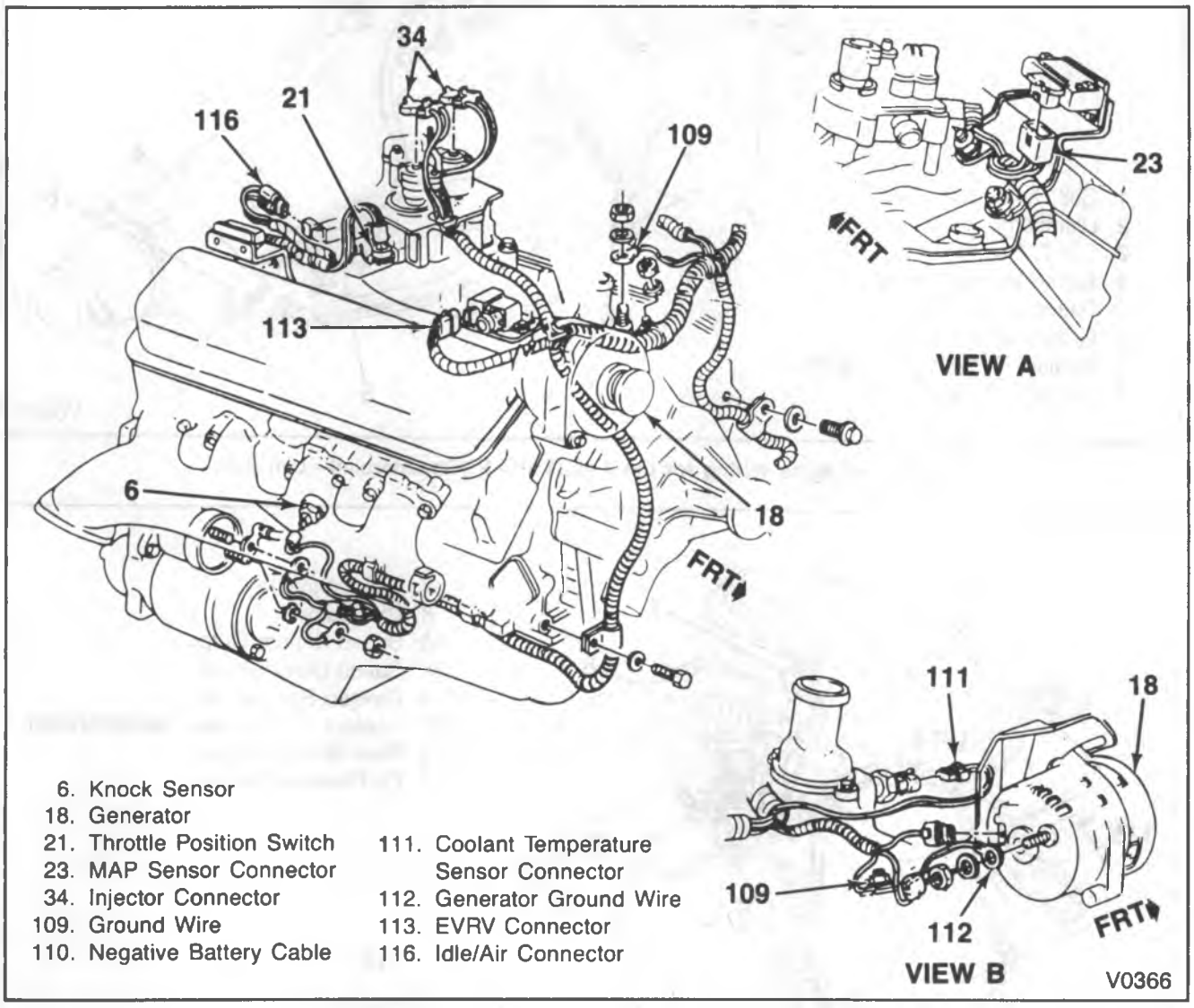

6. Knock Sensor
18. Generator
21. Throttle Position Switch
23. MAP Sensor Connector
34. Injector Connector
109. Ground Wire
110. Negative Battery Cable
111. Coolant Temperature Sensor Connector
112. Generator Ground Wire
113. EVRV Connector
116. Idle/Air Connector

Figure 1—Engine Wiring for the 7.4L (TBI)—P (Commercial)—Right Side

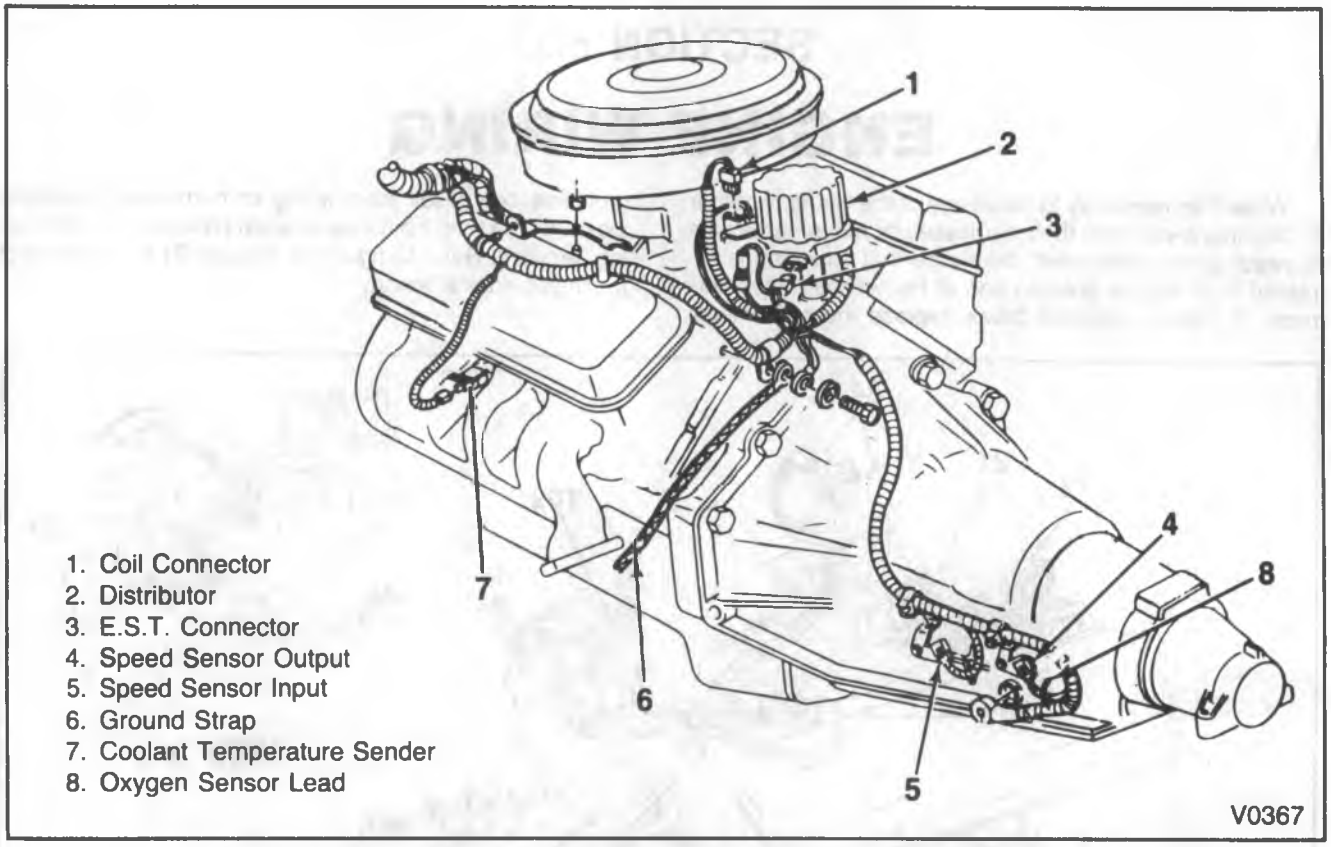

Figure 2—Engine Wiring for the 7.4L (TBI)—P (Commercial)—Left Side

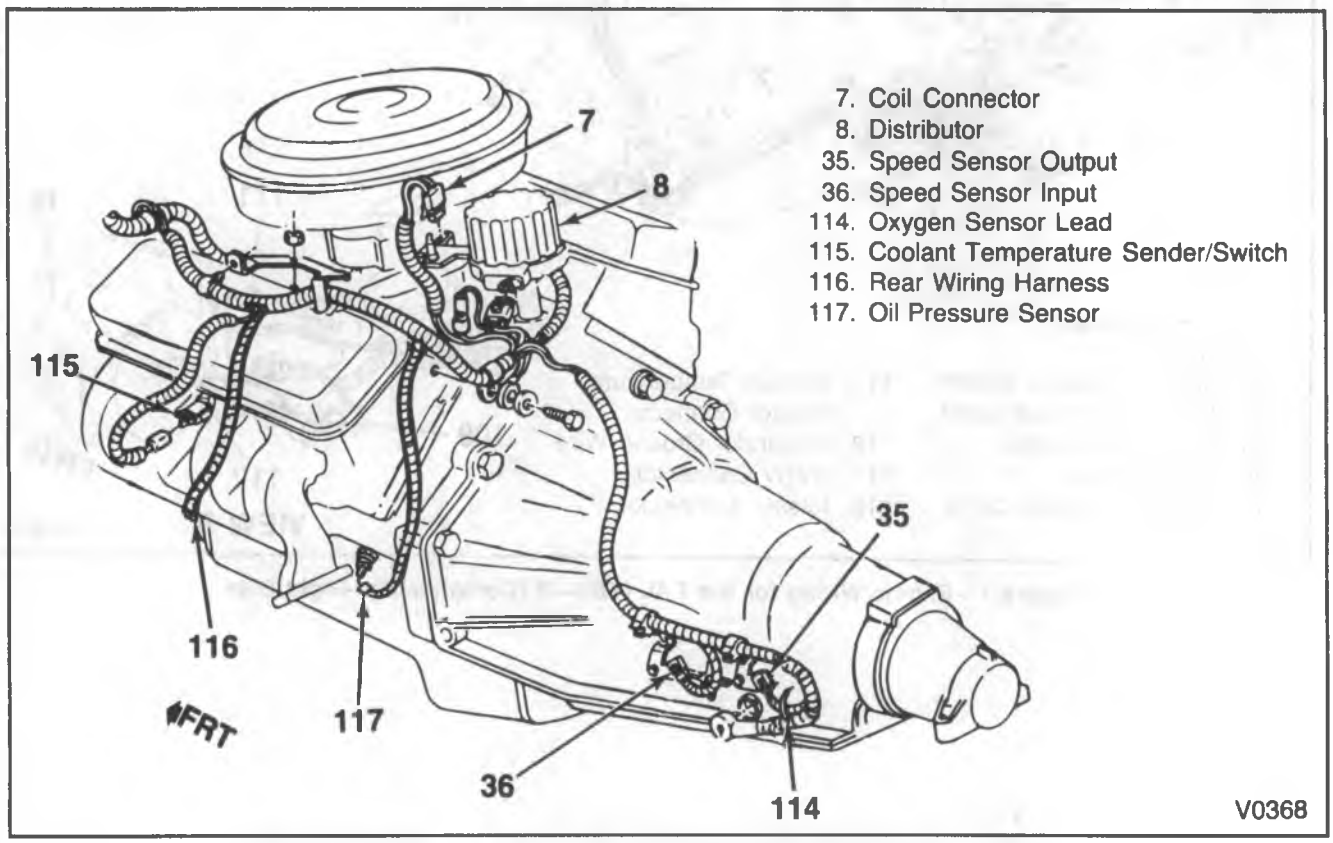

Figure 3—Engine Wiring for the 7.4L (TBI)—P (Motorhome)—Left Side

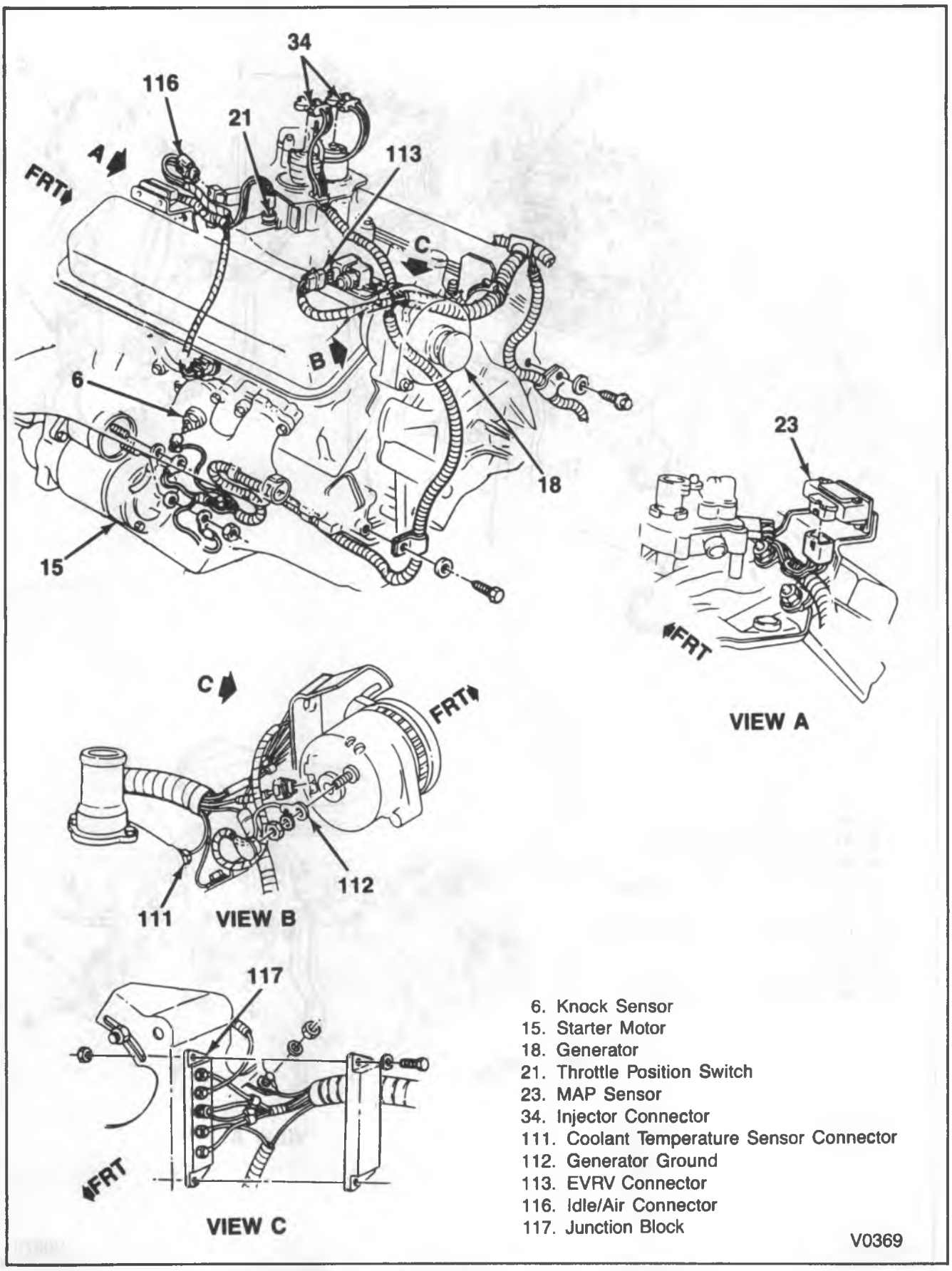

Figure 4—Engine Wiring for the 7.4L (TBI)—P (Motorhome)—Right Side

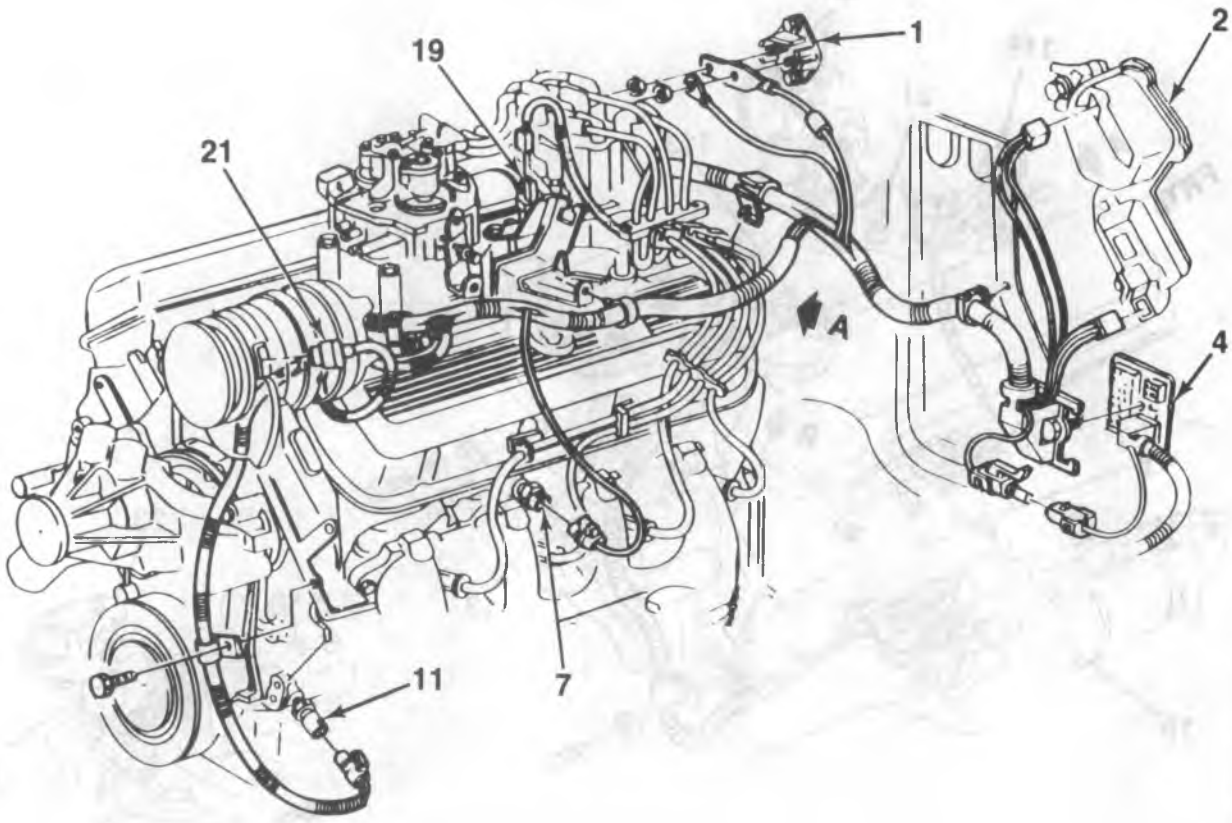

1. Junction Box
2. Windshield Wiper Motor
4. Bulkhead Connector
7. Coolant Temperature Sensor
9. Ground
11. Fuel Pump/Oil Pressure Switch
19. Coil
20. Distributor
21. Air Conditioning Connector

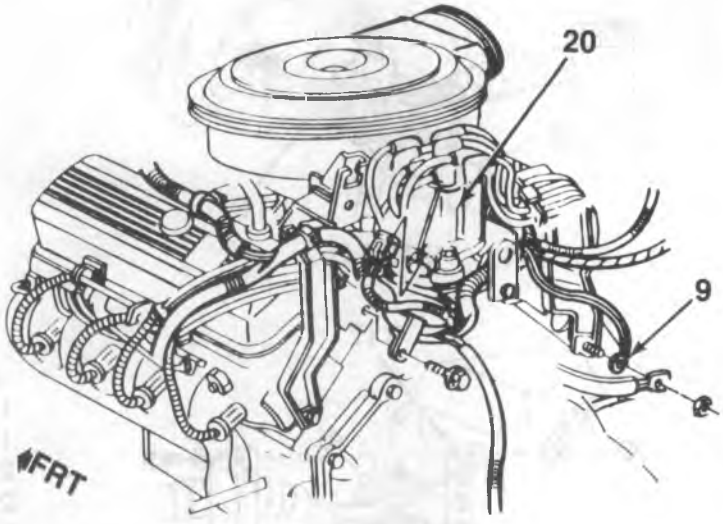

VIEW A

V0370

Figure 5—Engine Wiring for the 7.4L (TBI)—V—Left Side

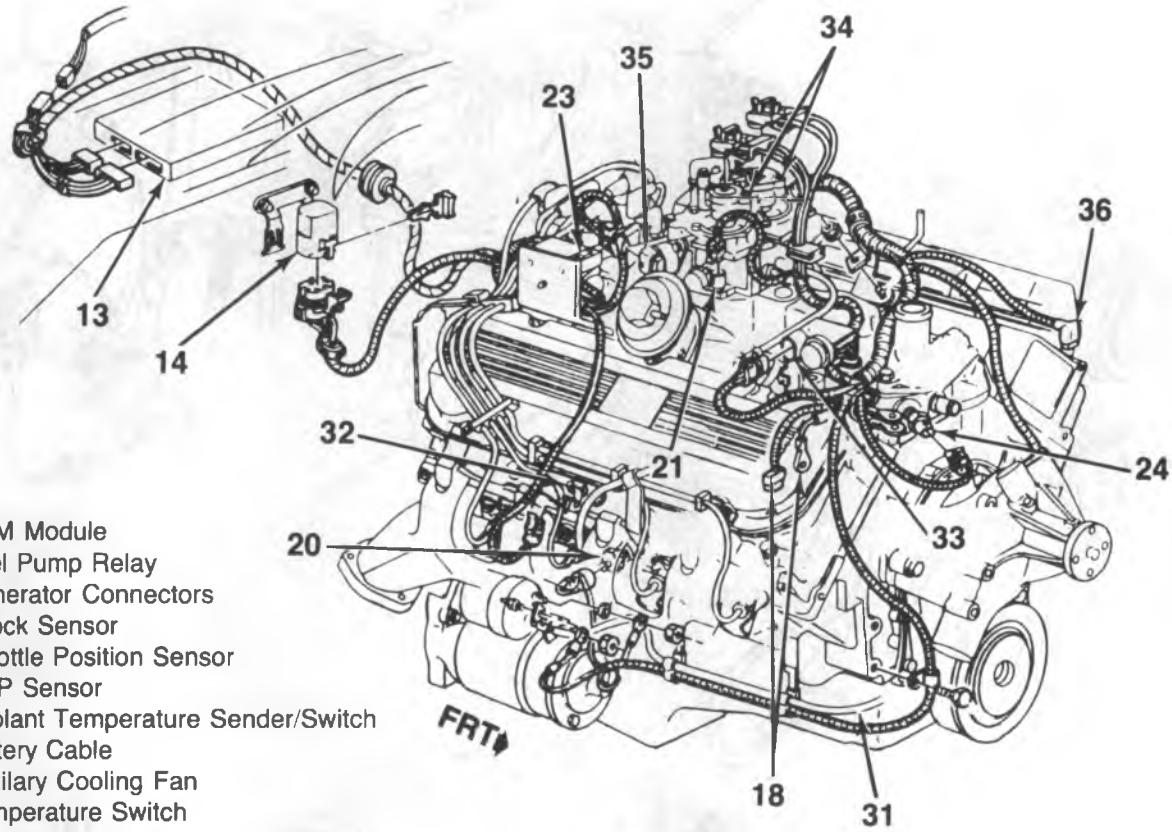

13. ECM Module
14. Fuel Pump Relay
18. Generator Connectors
20. Knock Sensor
21. Throttle Position Sensor
23. MAP Sensor
24. Coolant Temperature Sender/Switch
31. Battery Cable
32. Auxilary Cooling Fan Temperature Switch
33. E.V.R.V. Solenoid
34. Injector
35. I.A.C. Actuator
36. Air Conditioning Connector

V0371

Figure 6—Engine Wiring for the 7.4L (TBI)—V—Right Side

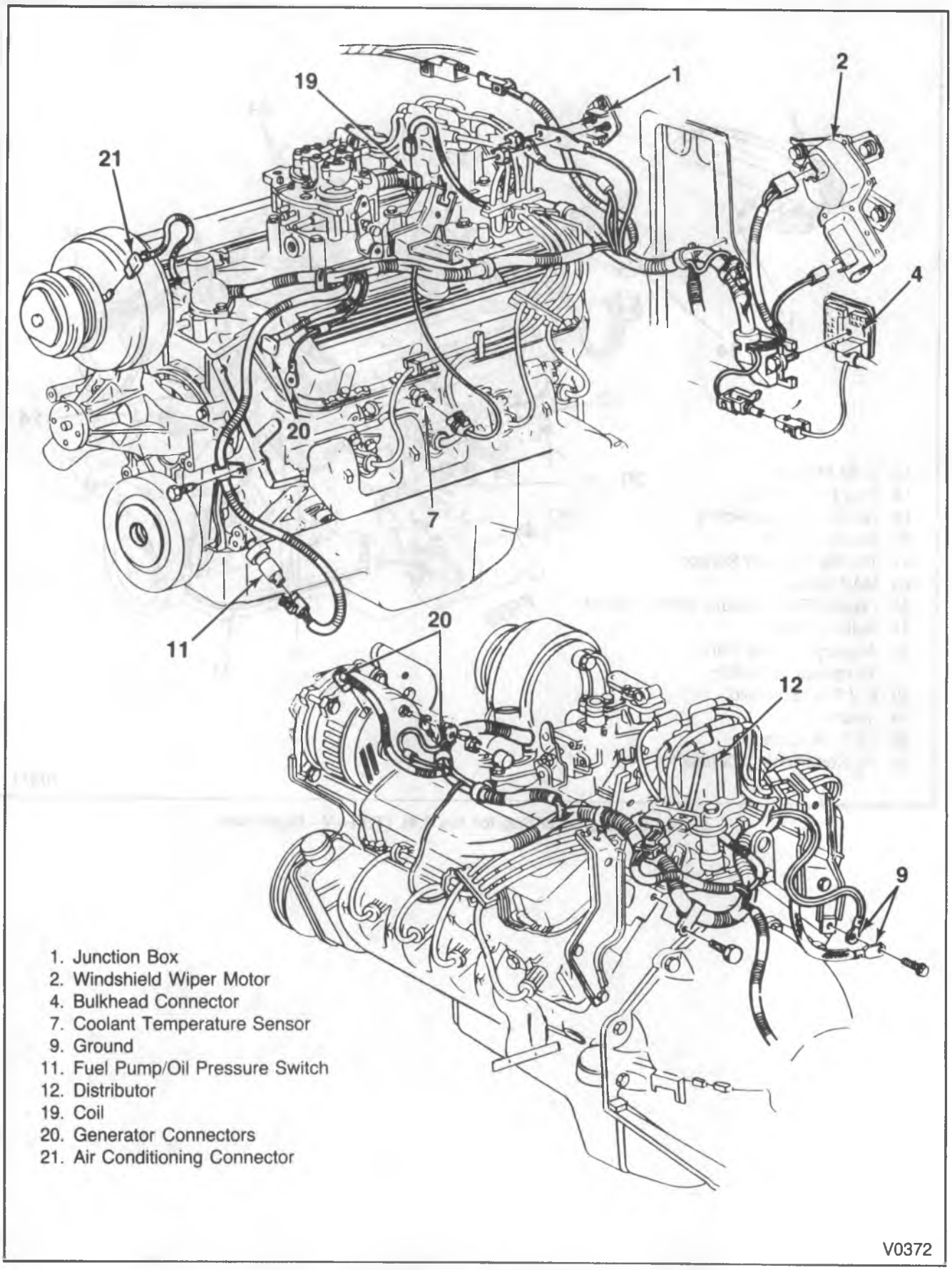

Figure 7—Engine Wiring for the 7.4L (TBI)—R—Left Side

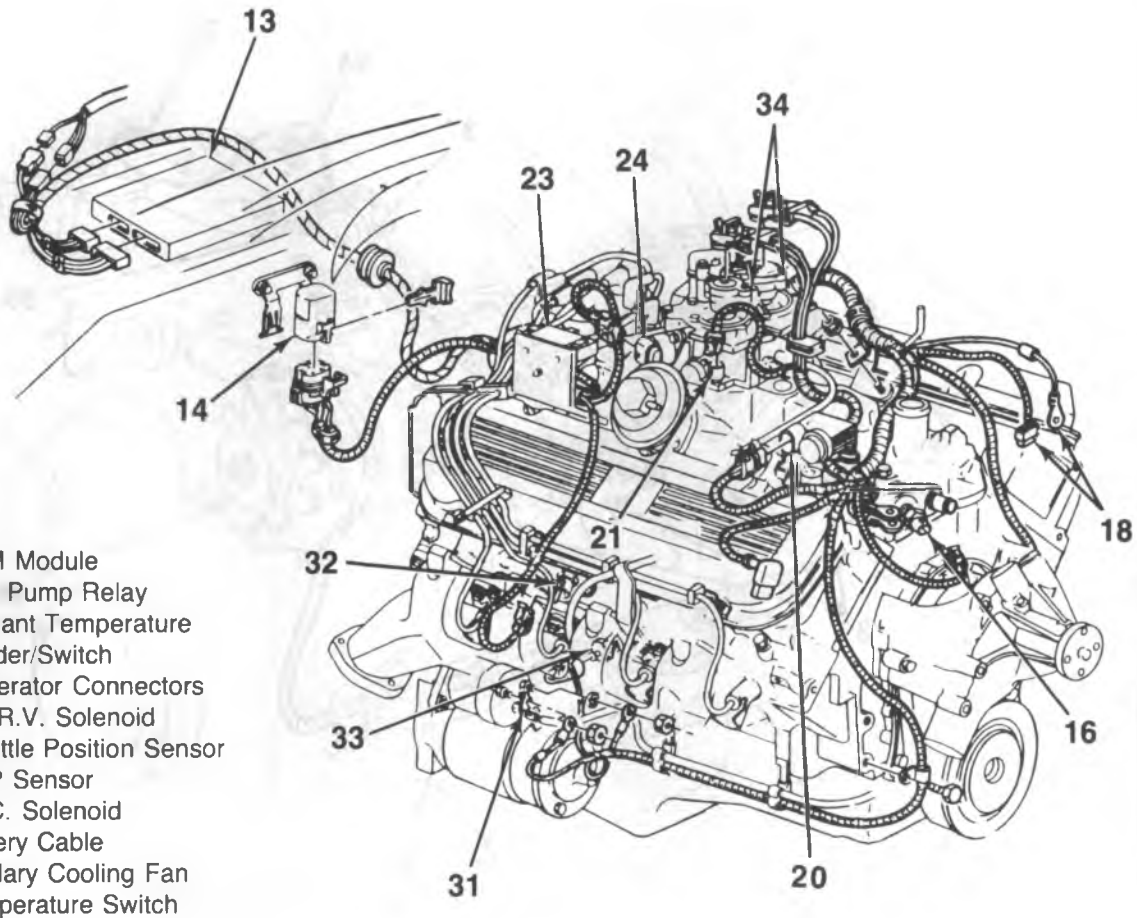

13. ECM Module
14. Fuel Pump Relay
16. Coolant Temperature Sender/Switch
18. Generator Connectors
20. E.V.R.V. Solenoid
21. Throttle Position Sensor
23. MAP Sensor
24. I.A.C. Solenoid
31. Battery Cable
32. Auxilary Cooling Fan Temperature Switch
33. Knock Sensor
34. Injector

V0373

Figure 8—Engine Wiring for the 7.4L (TBI)—R—Right Side

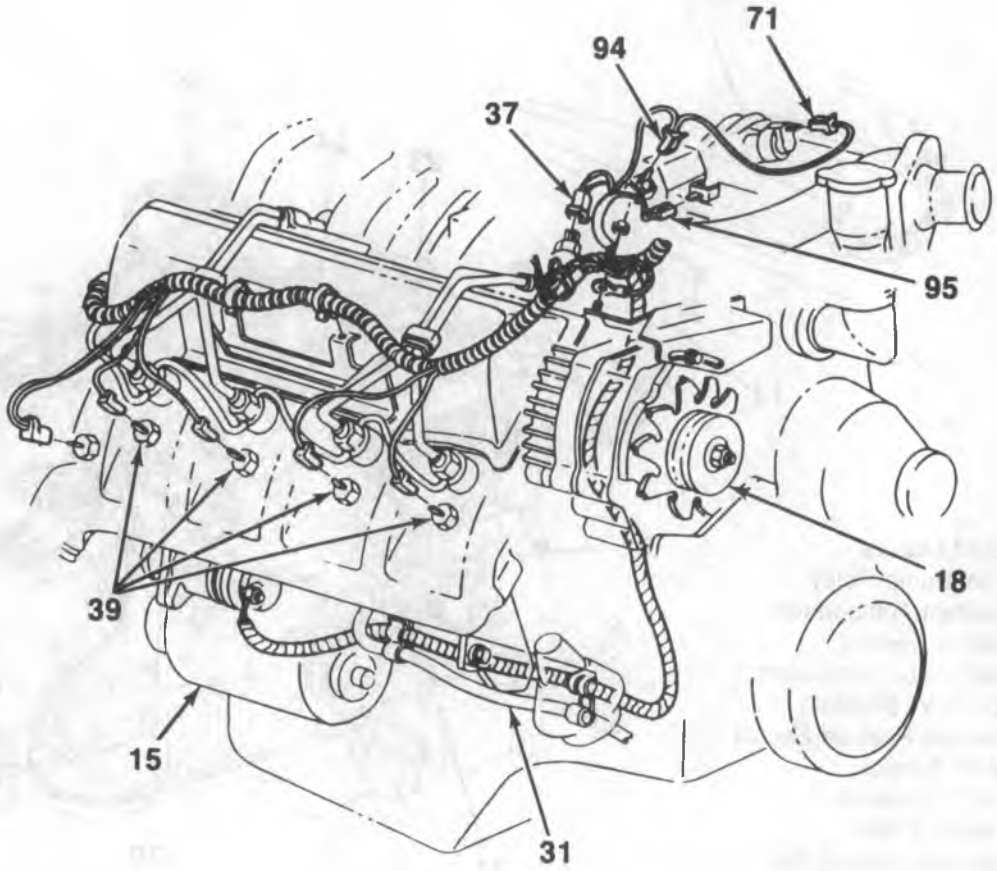

15. Starter
18. Generator
31. Battery Cable
37. Glow Plug Inhibit Switch Connector
39. Glow Plug
71. Fast Idle Solenoid Connector
94. Cold Advance Connector
95. Fuel Shutoff Valve Connector

F7152

Figure 9—Engine Wiring for the 6.2L Diesel—P—Right Side

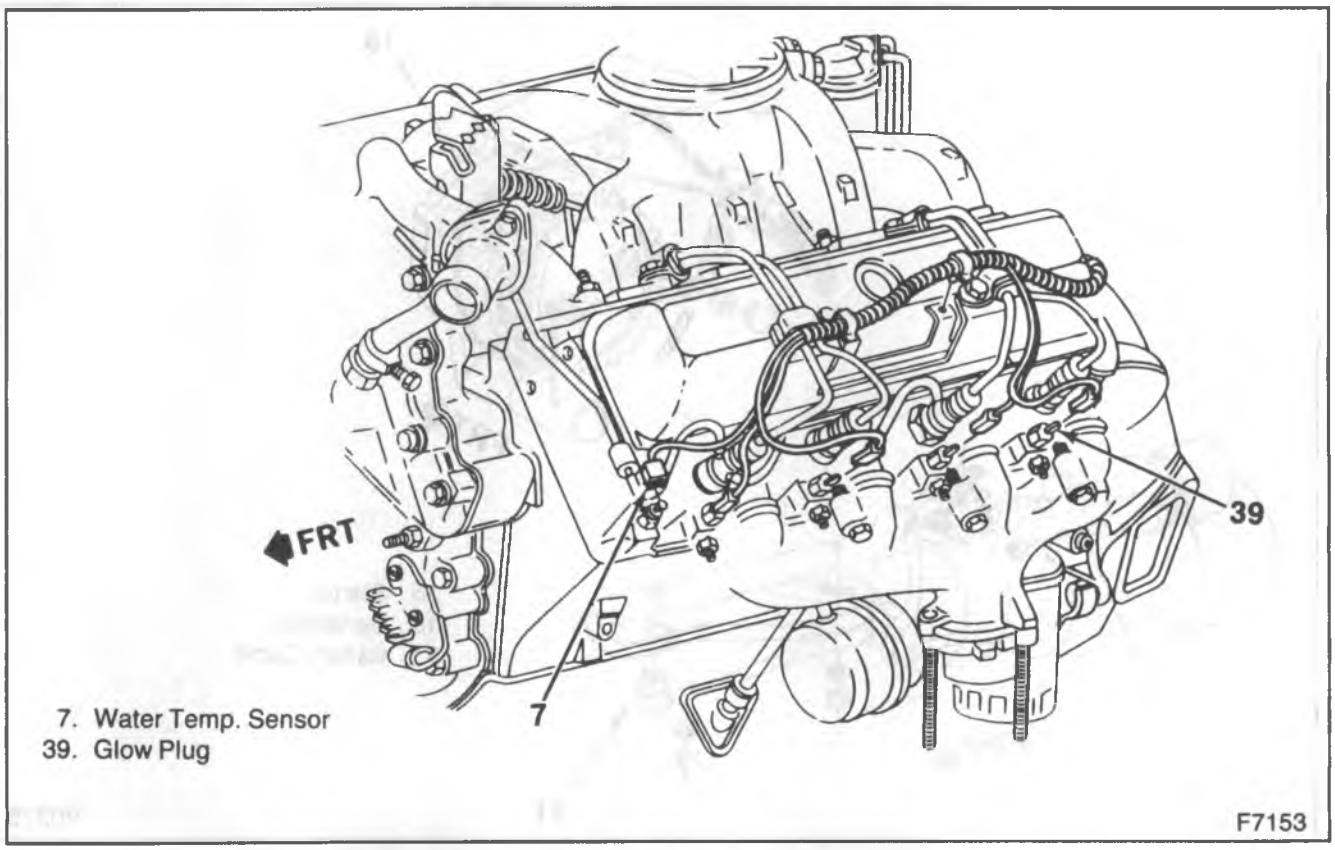

Figure 10—Engine Wiring for the 6.2L Diesel—P—Left Side

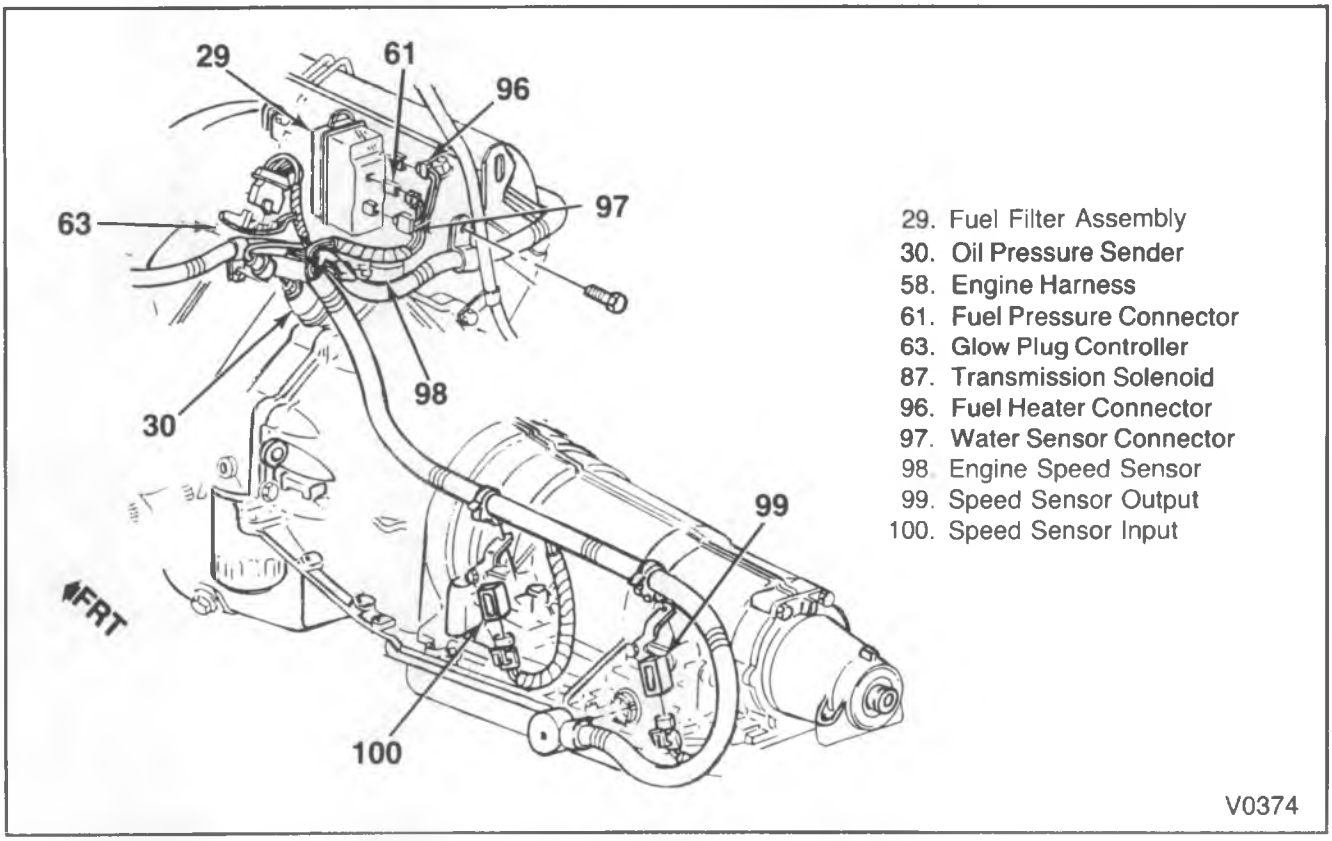

Figure 11—Engine Wiring for the 6.2L Diesel—P—Back of Engine

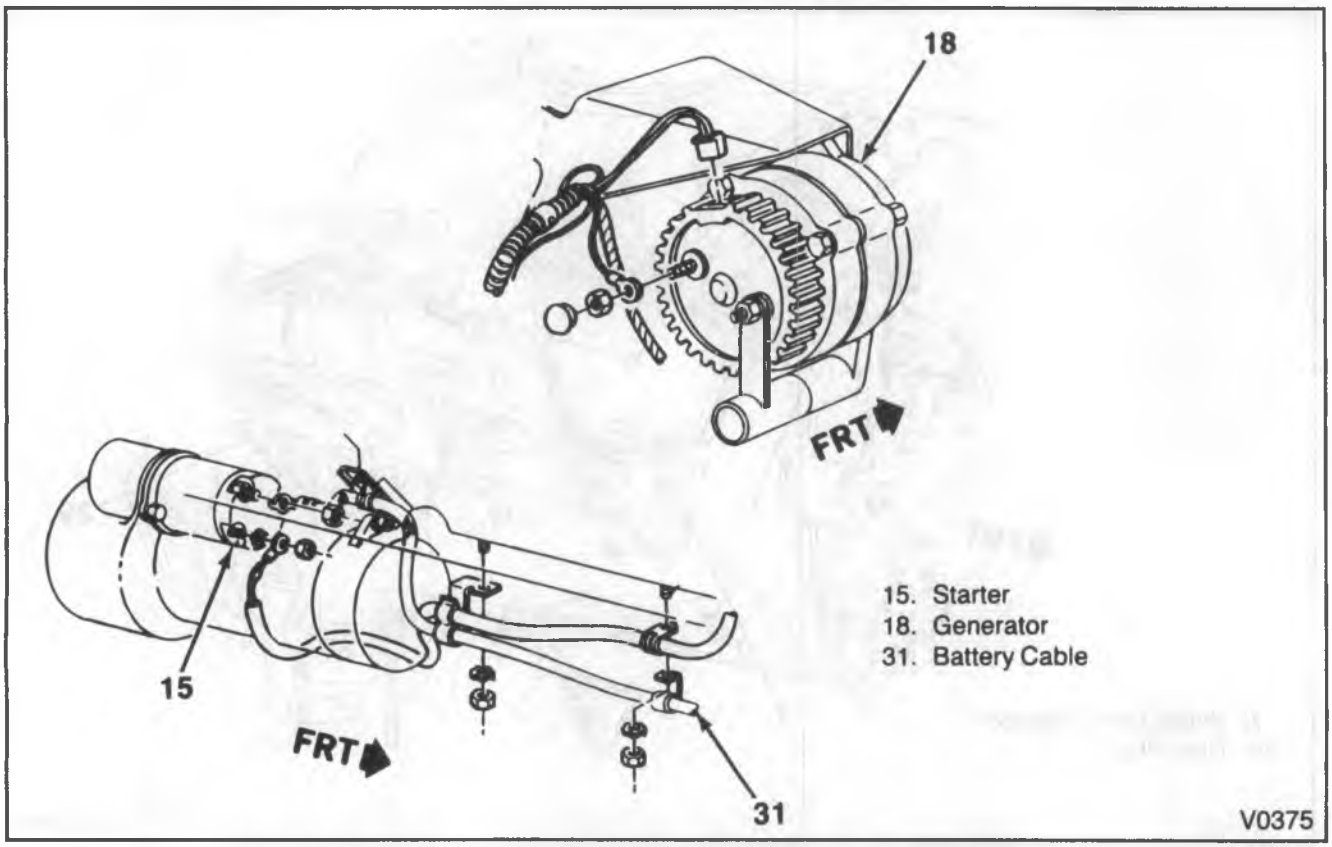

Figure 12—Engine Wiring to the Starter and Generator—6.2L Diesel—P

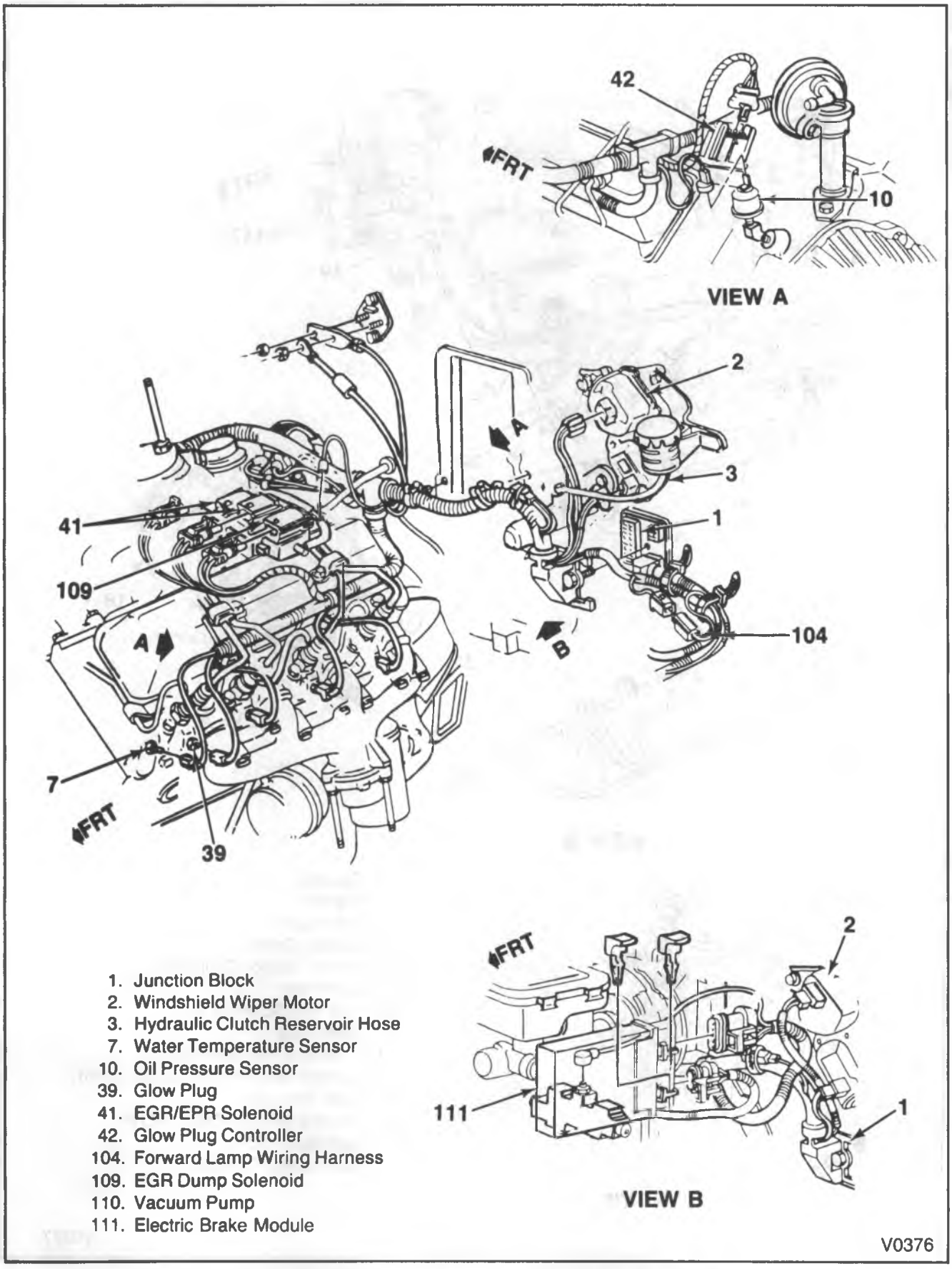

1. Junction Block
2. Windshield Wiper Motor
3. Hydraulic Clutch Reservoir Hose
7. Water Temperature Sensor
10. Oil Pressure Sensor
39. Glow Plug
41. EGR/EPR Solenoid
42. Glow Plug Controller
104. Forward Lamp Wiring Harness
109. EGR Dump Solenoid
110. Vacuum Pump
111. Electric Brake Module

Figure 13—Engine Wiring for the 6.2L Diesel—R/V—Left Side

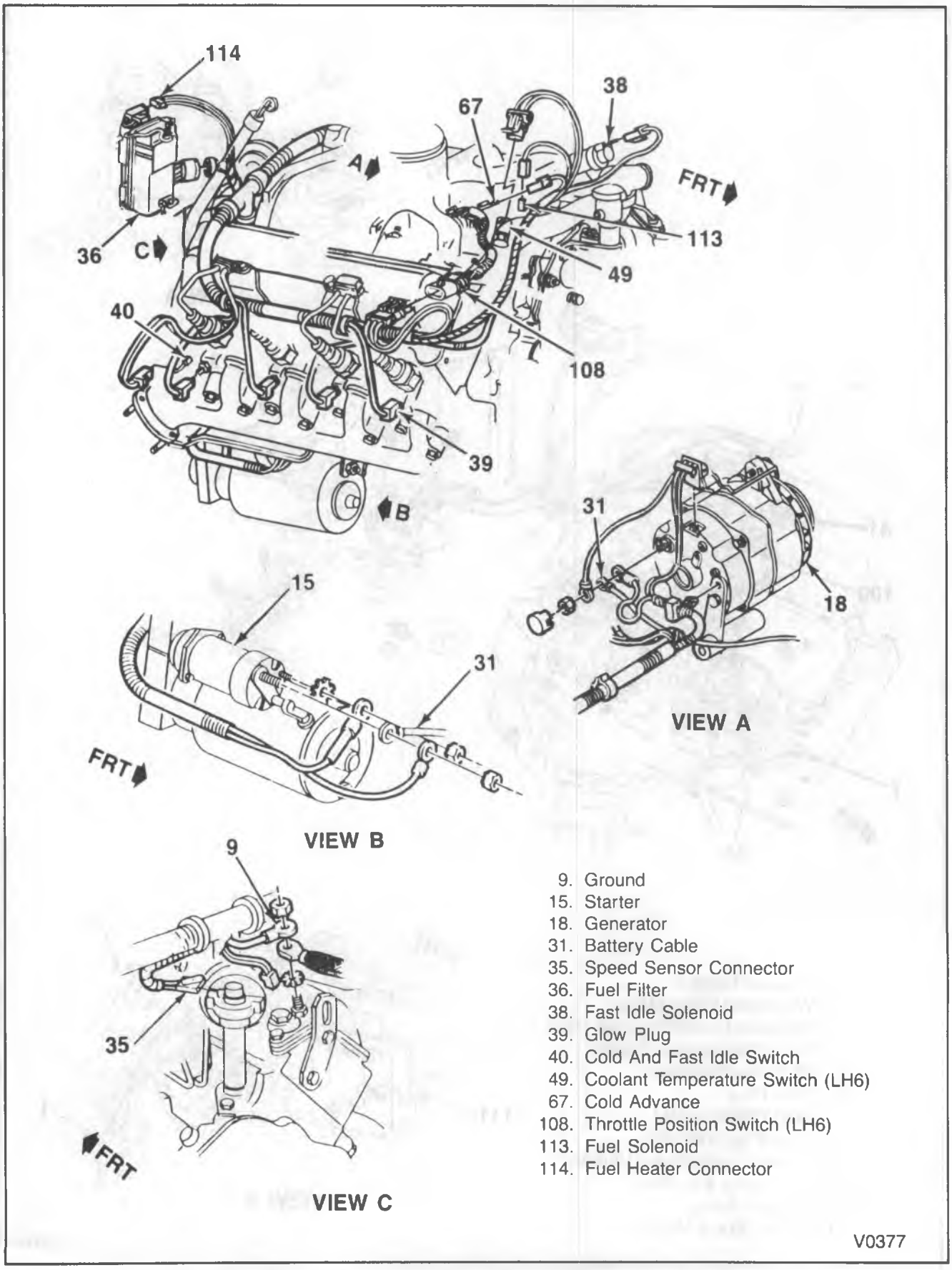

Figure 14—Engine Wiring for the 6.2L Diesel—R/V—Right Side

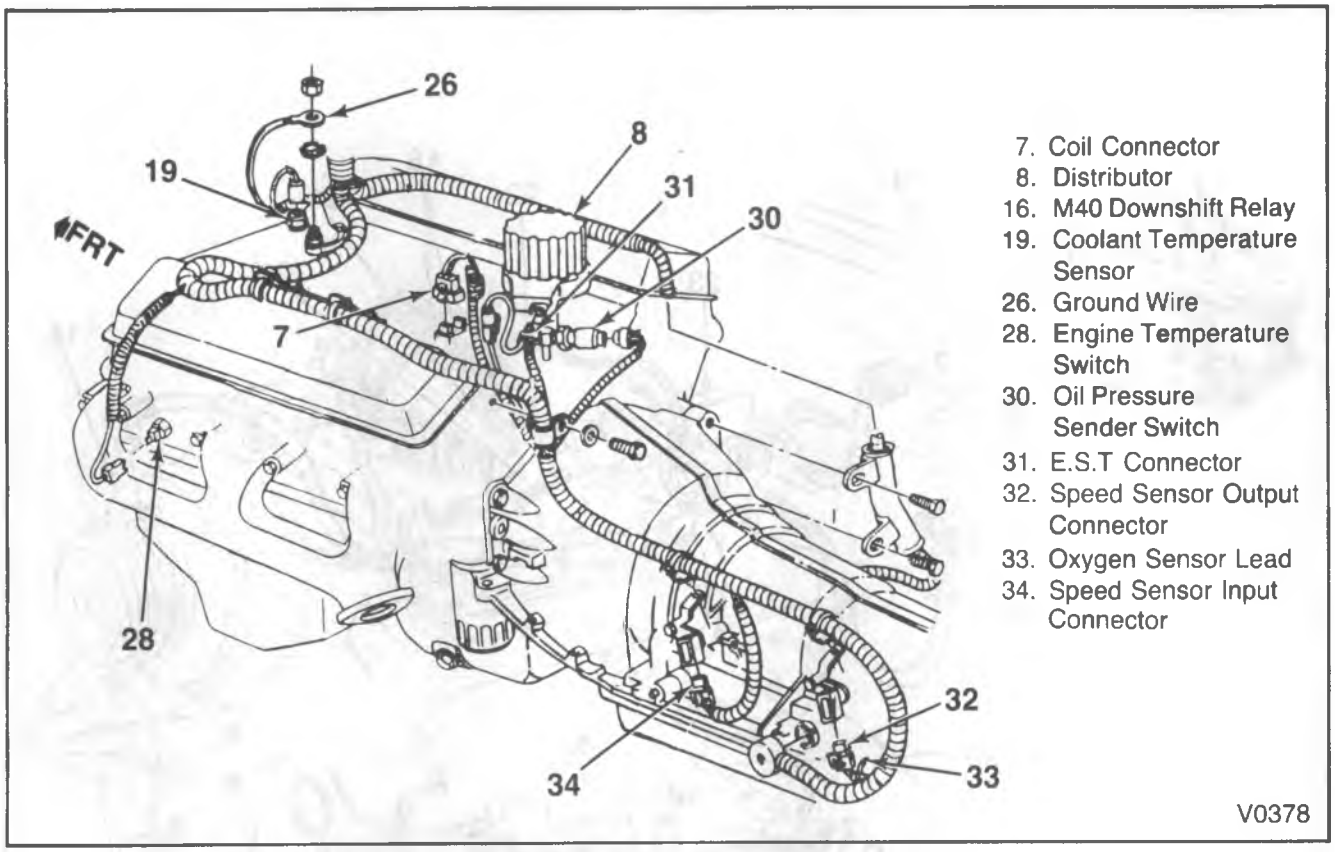

7. Coil Connector
8. Distributor
16. M40 Downshift Relay
19. Coolant Temperature Sensor
26. Ground Wire
28. Engine Temperature Switch
30. Oil Pressure Sender Switch
31. E.S.T Connector
32. Speed Sensor Output Connector
33. Oxygen Sensor Lead
34. Speed Sensor Input Connector

Figure 15—Engine Wiring for the 5.7L (TBI)—P—Left Side

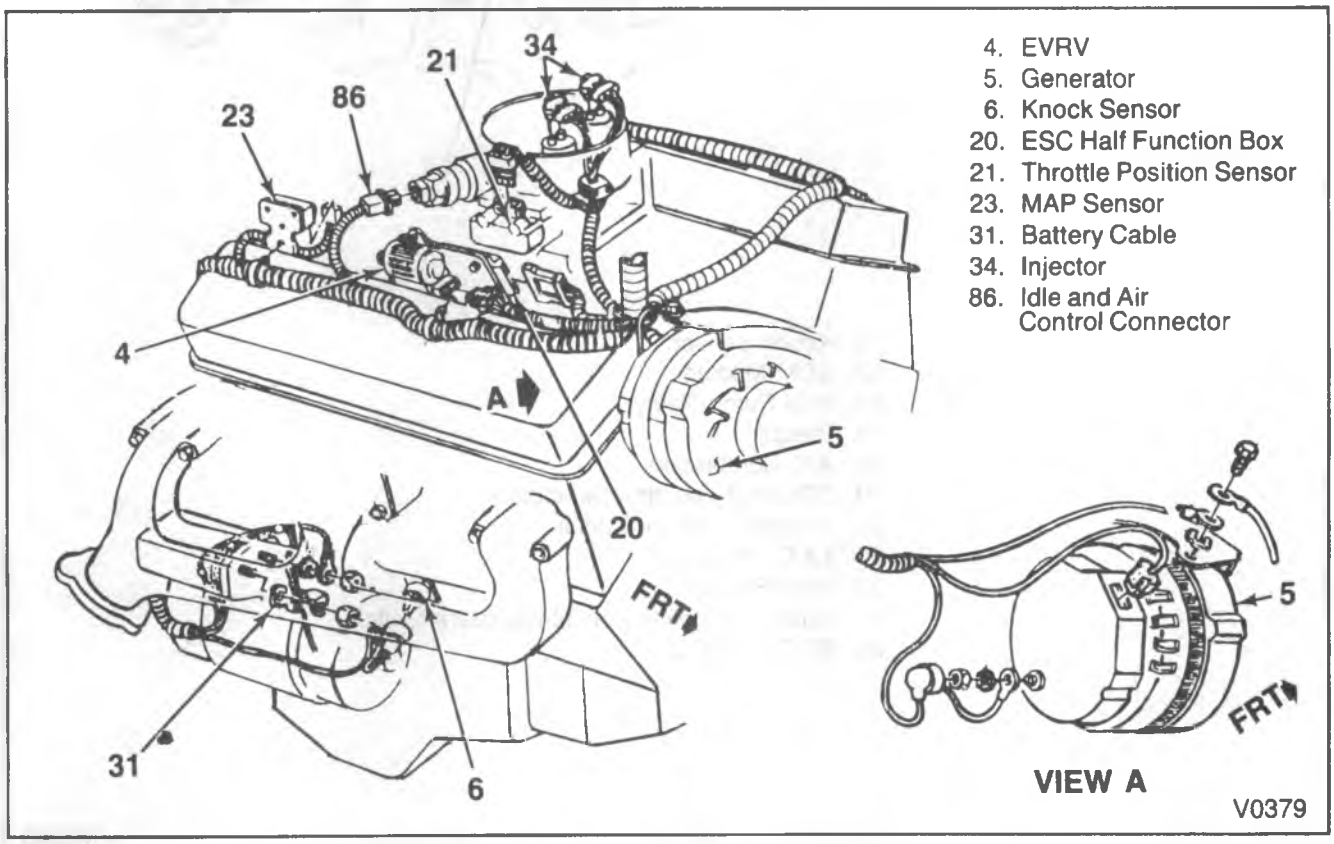

4. EVRV
5. Generator
6. Knock Sensor
20. ESC Half Function Box
21. Throttle Position Sensor
23. MAP Sensor
31. Battery Cable
34. Injector
86. Idle and Air Control Connector

Figure 16—Engine Wiring for the 5.7L (TBI)—P—Right Side

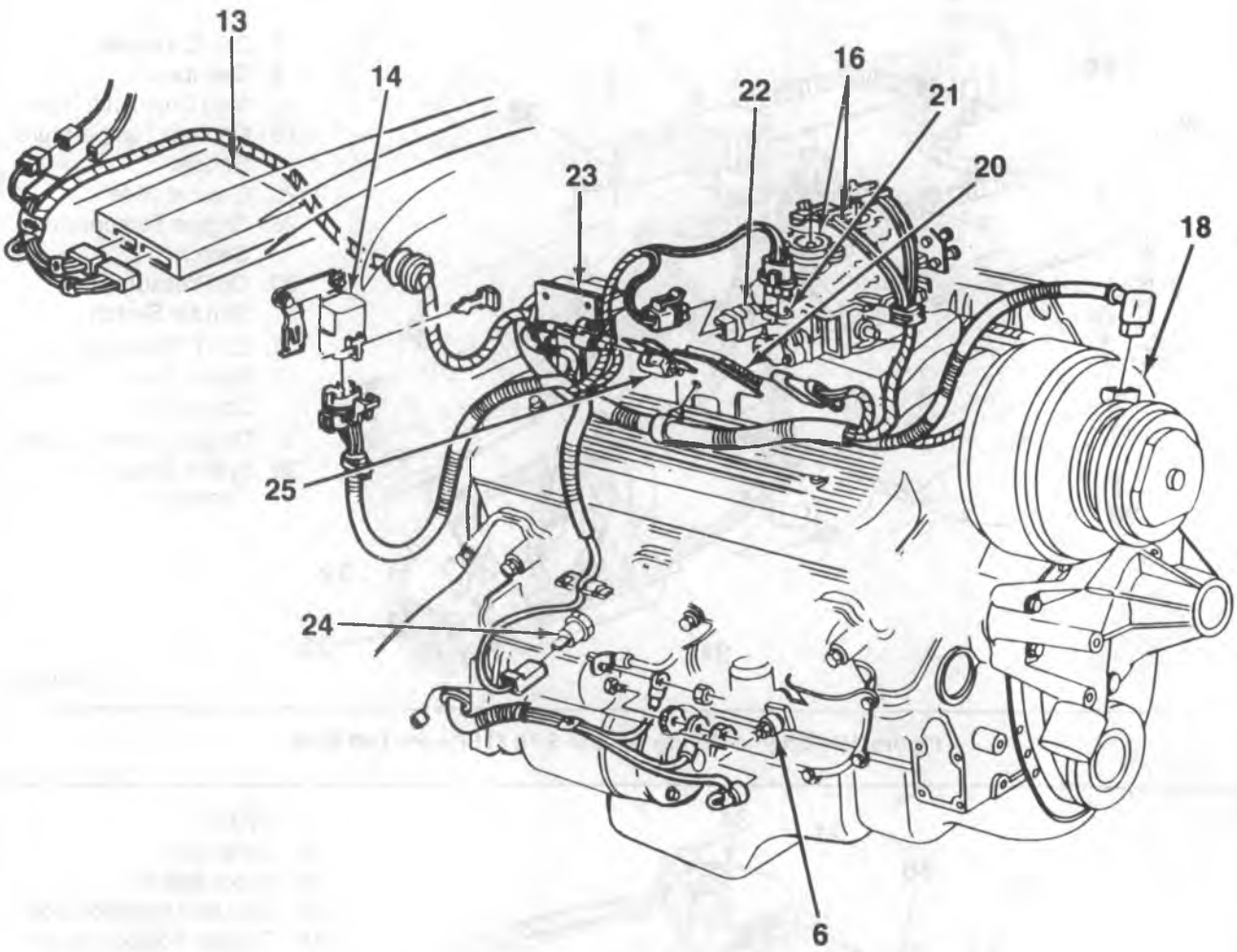

6. Knock Sensor
13. ECM Module
14. Fuel Pump Relay
16. Injector
18. A/C Compressor
20. ESC Half Function Solenoid
21. Throttle Position Sensor
22. I.A.C. Activator
23. MAP Sensor
24. Auxiliary Cooling Fan Temperature Switch
25. EGR Solenoid

V0380

Figure 17—Engine Wiring for the 5.7L (TBI)—R/V—Right Side

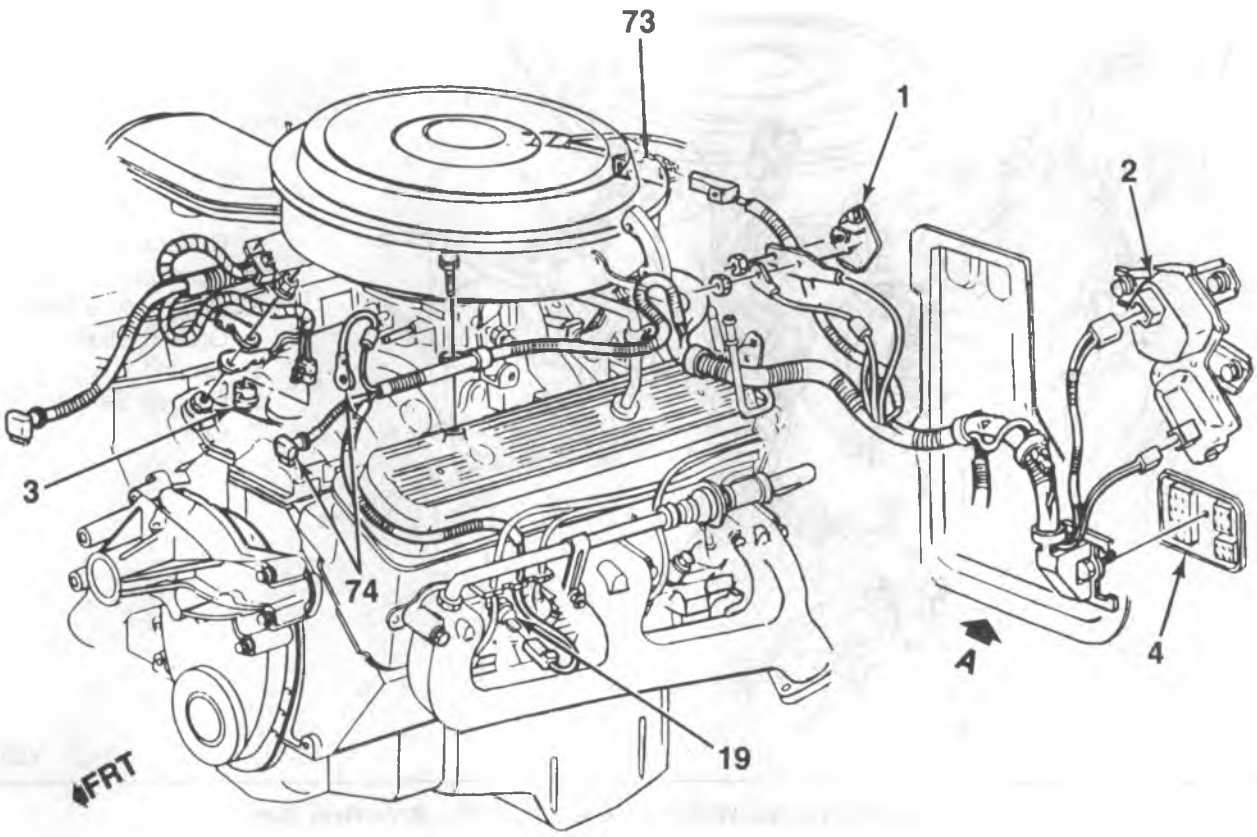

1. Junction Block
2. Windshield Wiper Motor
3. Coolant Temperature Sensor
4. Bulkhead Connector
19. Engine Coolant Sensor
73. A/C Wiring Harness
74. Generator Connectors
75. Electric Brake Module

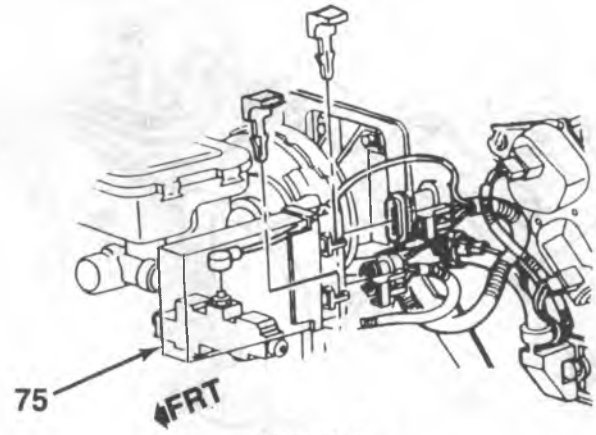

VIEW A

V0381

Figure 18—Engine Wiring for the 5.7L (TBI)—R/V—Left Side

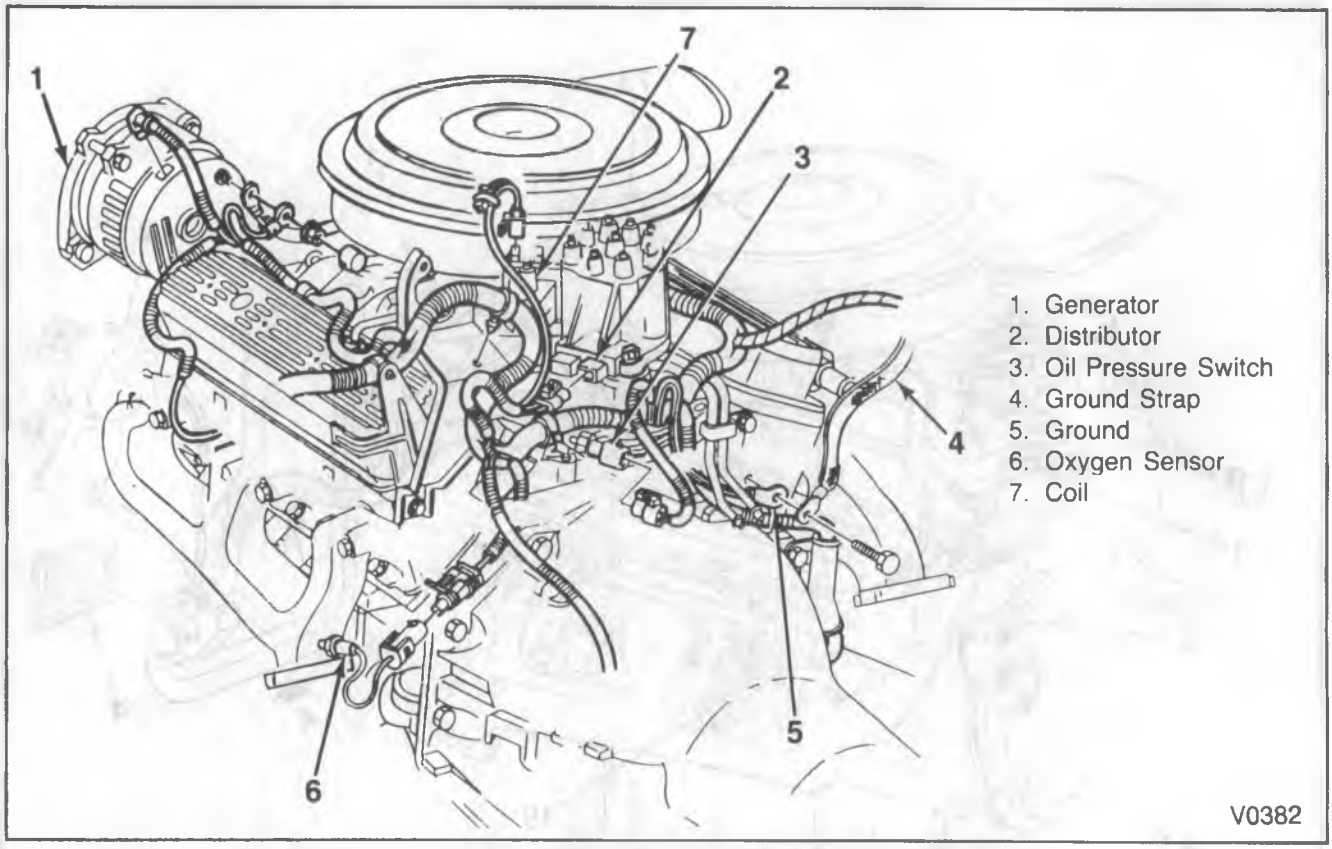

Figure 19—Engine Wiring for the 5.7L (TBI)—R/V—Rear Side

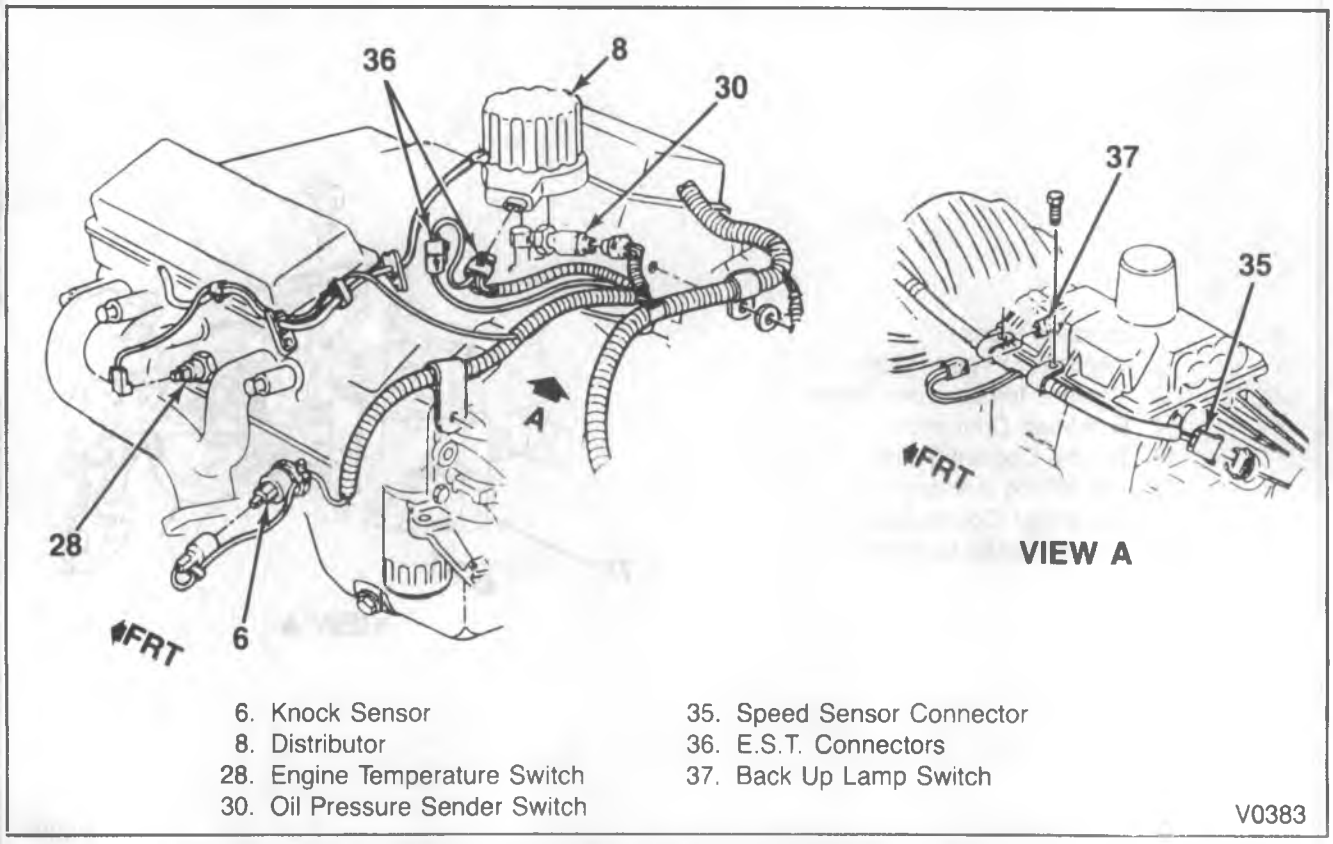

Figure 20—Engine Wiring for the 4.3L (TBI)—P Truck

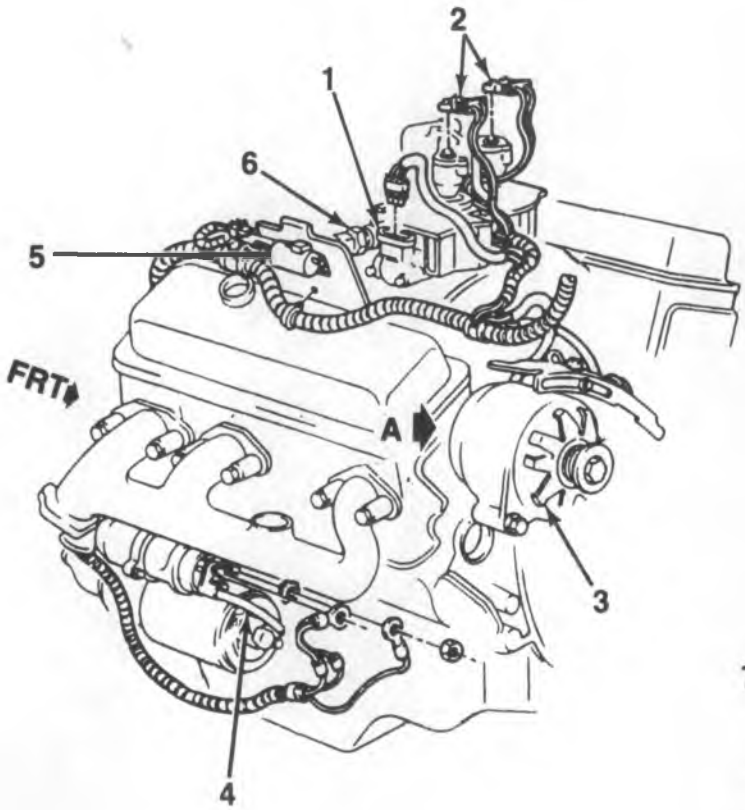

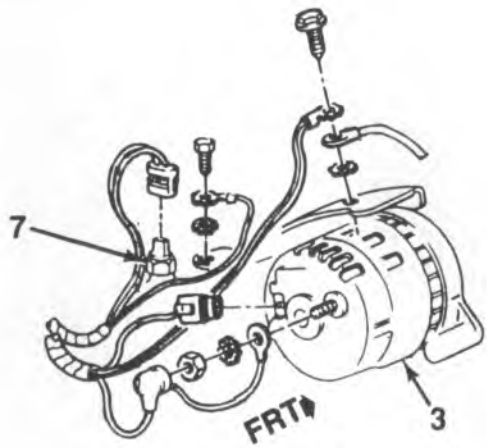

VIEW A

1. Throttle Position Sensor
2. Injector
3. Generator
4. Battery Cable
5. E.G.R. Solenoid
6. I.A.C.
7. Coolant Temperature Sensor
8. Coil
9. M.A.P. Sensor

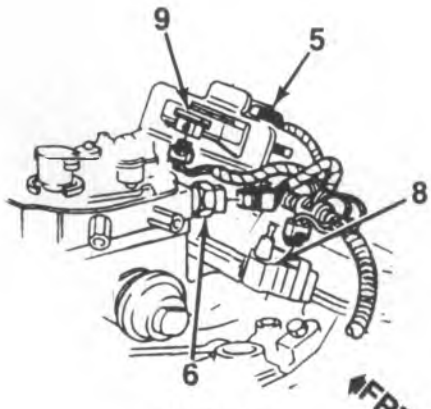

VIEW B

V0384

Figure 21—Engine Wiring for the 4.3L (TBI)—P Truck

SECTION 6E

EMISSIONS

CONTENTS

SUBJECT **PAGE**

Diesel Emissions.....6E2-1

For information on vehicles with Throttle Body Injection (TBI), refer to the Fuel and Emissions Service Manual if you are using X-9132. Refer to the rear of this manual if you are using ST-330-91.

SECTION 6E2
DIESEL EMISSIONS - 6.2L DIESEL ENGINE
CONTENTS

GENERAL DESCRIPTION 6E2-2
VACUUM PUMP 6E2-2
CRANKCASE VENTILATION SYSTEM 6E2-2
CDR VALVE TEST 6E2-2
CDR Valve Specification 6E2-4
On-Vehicle Service/ CDR Valve 6E2-4
DIESEL ELECTRONIC CONTROL SYSTEM 6E2-4
PURPOSE 6E2-4
ELECTRONIC CONTROL MODULE 6E2-5
ALDL CONNECTOR 6E2-6
"SERVICE ENGINE SOON" LAMP 6E2-6
WIRE HARNESS & CONNECTORS 6E2-6
INPUT INFORMATION 6E2-6
Sensors 6E2-6
DIAGNOSIS/GENERAL INFORMATION . . . 6E2-7
"Scan" Tool 6E2-8
Diagnostic Mode 6E2-8
Clearing Codes 6E2-8
Electrostatic Discharge Damage . . . 6E2-8
ELECTRONIC CONTROL MODULE 6E2-8
PROM 6E2-9
SENSORS 6E2-9
CHARTS:
Code Identification 6E2-10
Diesel Diagnostic Circuit Check 6E2-12
"SES" Light Inoperative 6E2-14
ECM Check 6E2-16
EPR Solenoid Electrical Check 6E2-18
EPR Vacuum Circuit Check 6E2-20
Code 12-No Reference Pulse 6E2-22
Code 14-Coolant Temp. Sen. Ckt (Lo) . . 6E2-24
Code 15-Coolant Temp. Sen. Ckt (Hi) . . 6E2-26
Code 21-TPS Circuit (Voltage High) . . . 6E2-28
Code 22-TPS Circuit (Voltage Low) . . . 6E2-30
Code 23-TPS Circuit (Misadjusted) . . . 6E2-32
Code 24-VSS Circuit 6E2-34
Code 31-MAP Voltage Low 6E2-36
Code 32-EGR Circuit Loop Error 6E2-38
Code 33-MAP Voltage High 6E2-40
Code 51-PROM Problem 6E2-43
Code 52-ECM Fault 6E2-43
Code 53-Voltage Reference Overload 6E2-42
ON-VEHICLE SERVICE 6E2-44
WIRE HARNESS 6E2-44
CONNECTORS AND TERMINALS 6E2-44
ELECTRONIC CONTROL MODULE 6E2-48
PROM 6E2-48
SENSORS 6E2-48
ECM CONNECTOR IDENTIFICATION AND VOLTAGES 6E2-49
EXHAUST GAS RECIRCULATION (EGR) SYSTEM 6E2-53
EGR/EPR SOLENOID 6E2-53
DIAGNOSIS 6E2-54
ON-VEHICLE SERVICE 6E2-54
EGR VALVE 6E2-54
EPR VALVE, EGR/EPR SOLENOID 6E2-54
TORQUE CONVERTER CLUTCH 6E2-55
DIAGNOSIS - ELECTRICAL 6E2-56
GLOW PLUG CONTROL SYSTEM 6E2-58
GLOW PLUG CIRCUIT 6E2-58
INSTRUMENTATION 6E2-58
ELECTRONIC CONTROLLER/GLOW PLUG RELAY ASSY 6E2-58
CIRCUIT OPERATION 6E2-58
DIAGNOSIS 6E2-59
CIRCUIT CHECK 6E2-59
COLD ADVANCE CONTROL SYSTEM 6E2-63
PURPOSE 6E2-63
DIAGNOSIS 6E2-63
ON-VEHICLE SERVICE 6E2-63
COLD ADVANCE CONTROL RELAY . . . 6E2-63
COLD ADVANCE SOLENOID 6E2-63
PARTS INFORMATION 6E2-66
SPECIAL TOOLS CHART 6E2-67

ALL NEW GENERAL MOTORS VEHICLES ARE CERTIFIED BY THE UNITED STATES ENVIRONMENTAL PROTECTION AGENCY AS CONFORMING TO THE REQUIREMENTS OF THE REGULATIONS FOR THE CONTROL OF AIR POLLUTION FROM NEW MOTOR VEHICLES. THIS CERTIFICATION IS CONTINGENT ON CERTAIN ADJUSTMENTS BEING SET TO FACTORY STANDARDS. IN MOST CASES, THESE ADJUSTMENT POINTS EITHER HAVE BEEN PERMANENTLY SEALED AND/OR MADE INACCESSIBLE TO PREVENT INDISCRIMINATE OR ROUTINE ADJUSTMENT IN THE FIELD. FOR THIS REASON, THE FACTORY PROCEDURE FOR TEMPORARILY REMOVING PLUGS, CAPS, ETC., FOR PURPOSES OF SERVICING THE PRODUCT, MUST BE STRICTLY FOLLOWED AND, WHEREVER PRACTICABLE, RETURNED TO THE ORIGINAL INTENT OF THE DESIGN.

GENERAL DESCRIPTION

This 6.2L diesel engine has controls to reduce exhaust emissions, while maintaining good driveability and fuel economy.

The 6.2L (RPO LH6) diesel engine (Figure 6E2-2) with light duty emission regulations has the following controls:

- Crankcase Ventilation.
- Diesel Electronic Control.
  - Exhaust Gas Recirculation
  - Torque Converter Clutch
  - Cold Advance and Glow Plug Control

The 6.2L (RPO LL4) diesel engine (Figure 6E2-3) with heavy duty emission regulations has the following controls:

- Crankcase Ventilation.
- Vacuum Regulator Valve.

For further information on VRV, refer to SECTION 6C2 of this manual.

VACUUM PUMP (Figure 6E2-1)

A vacuum pump, located on the back of the engine, provides a vacuum source to operate the EGR system (LH6), the vacuum regulator valve (LL4), air conditioning servos (if used), and cruise control servo (if used).

For diagnosis and on-vehicle service, refer to Section 6H of this service manual.

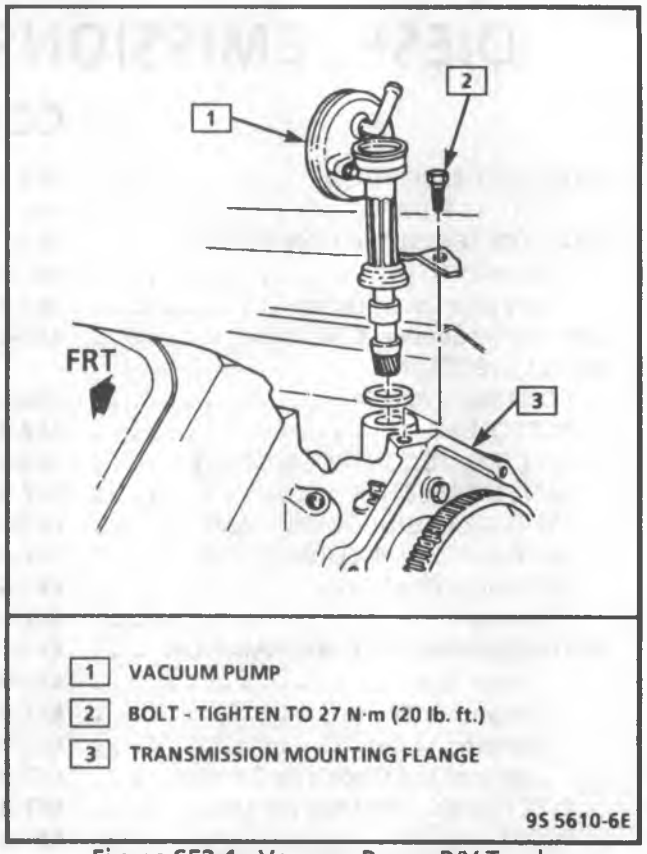

Figure 6E2-1 - Vacuum Pump-R/V Truck

CRANKCASE VENTILATION SYSTEM

GENERAL DESCRIPTION

PURPOSE

The crankcase ventilation system (Figures 6E2-4 and 6E2-5) is used on all 6.2L (LH6 and LL4) diesel engines and is designed to reduce the crankcase pressure at idle. This lower pressure reduces engine oil leaks. The system consists of a crankcase depression regulator valve, located on the right valve cover.

The crankcase depression regulator (CDR) valve is used to regulate (meter) the flow of crankcase gases back into the engine. The valve is designed to limit vacuum in the crankcase as the gases are drawn from the right valve cover, through the valve, and into the intake manifold (air cross-over).

The intake manifold vacuum acts against a spring loaded diaphragm to control the flow of crankcase gases (Figures 6E2-4 and 6E2-5). Higher intake vacuum levels pull the diaphragm closer to the top of the outlet tube. This reduces the amount of gases being drawn from the crankcase and decreases the vacuum level in the crankcase. As the intake vacuum decreases, the spring pushes the diaphragm away from the top of the outlet tube allowing more gases to flow to the intake manifold.

Refer to SECTION 0B, for diesel crankcase ventilation system maintenance requirements.

NOTICE: Do Not allow any solvent to come in contact with the diaphragm of the crankcase depression regulator valve, because the diaphragm will fail.

DIAGNOSIS

CDR VALVE TEST

The purpose of the CDR valve is to maintain 0.75-1.0 kPa (3-4 inches of water) vacuum in the crankcase. Too little vacuum will tend to force oil leaks. Too much vacuum will pull oil into the air cross over.

The CDR valve is checked with a water manometer. The U-tube manometer (Figure 6E2-7) indicates pressure or vacuum by the difference in the height of two columns of fluid.

Connect one end of the manometer to the engine oil dipstick hole. The other end of the manometer is vented to atmosphere.

Install air cleaner and run engine at idle.

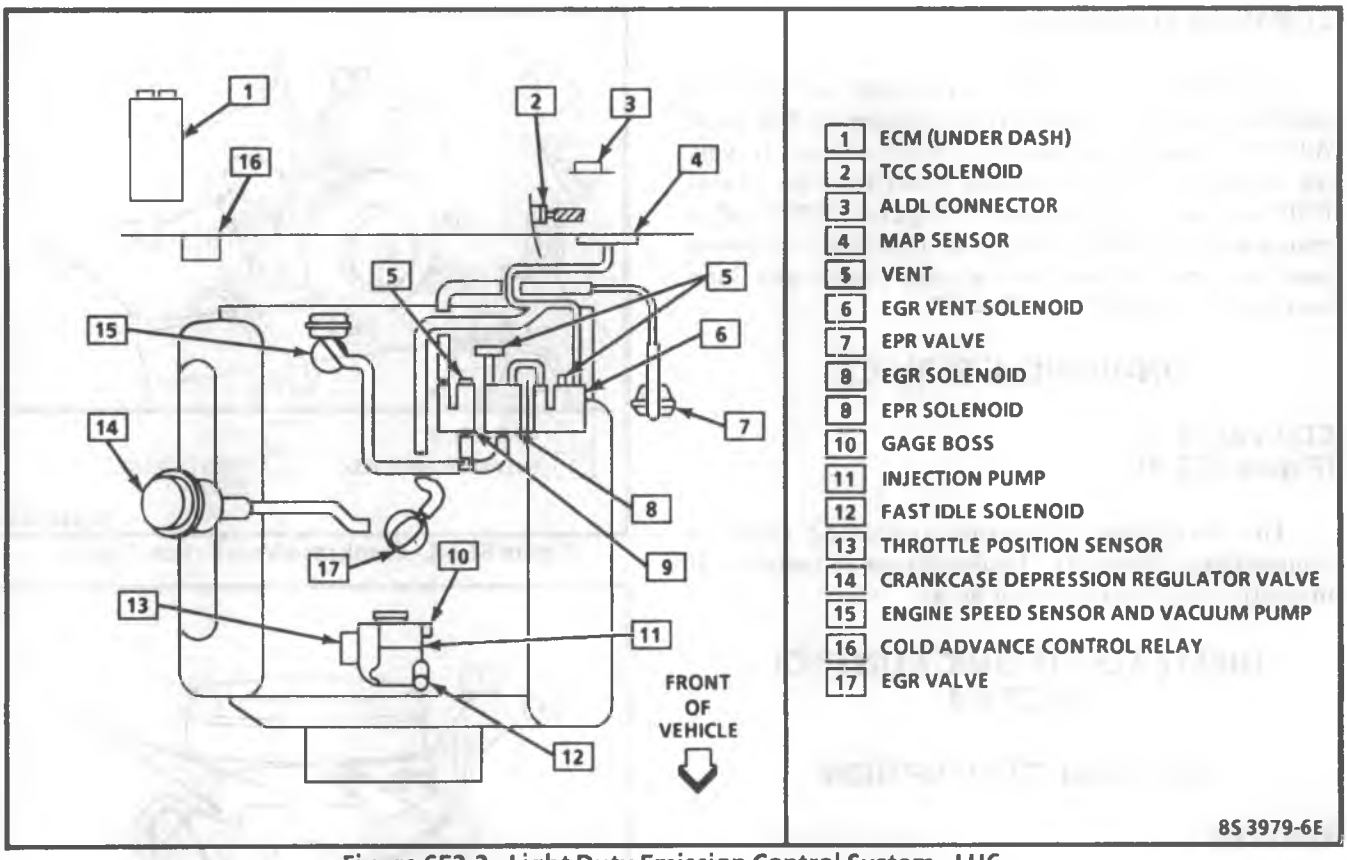

Figure 6E2-2 - Light Duty Emission Control System - LH6

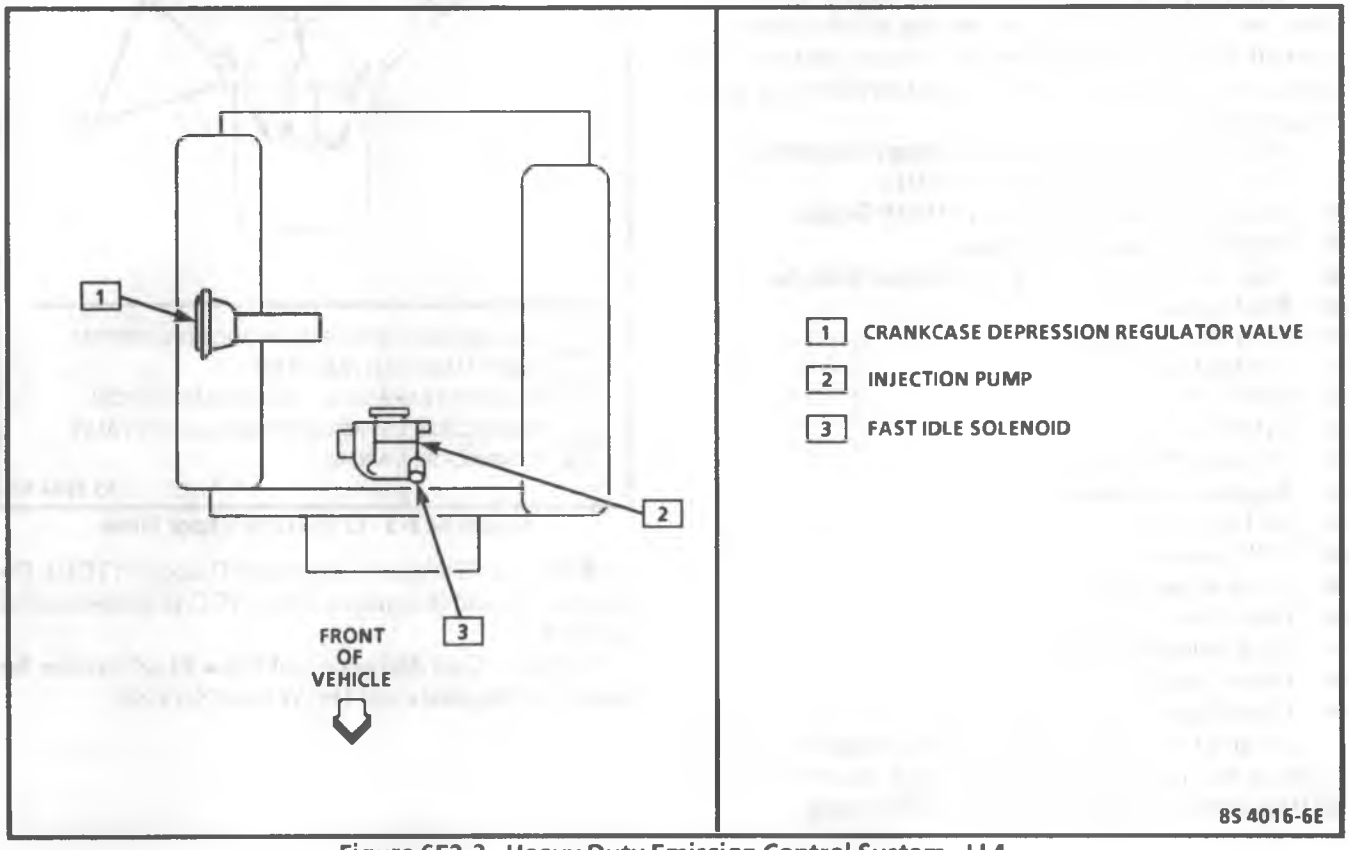

Figure 6E2-3 - Heavy Duty Emission Control System - LL4

CDR Valve Specification

One inch (1") water pressure at idle to approximately 3-4 inches water vacuum at full load. Add the amount that the manometer column travels up, to amount column travels down to obtain total PSI/Vacuum. An example (Figure 6E2-7) of a manometer reading is as follows: One-half inch above zero plus one-half inch below zero equals one inch vacuum reading (1/2" + 1/2" = 1").

ON-VEHICLE SERVICE

CDR VALVE (Figure 6E2-4)

The crankcase depression regulator valve is replaced as an assembly. Replace hoses as required, if inspection indicates cracks or decay.

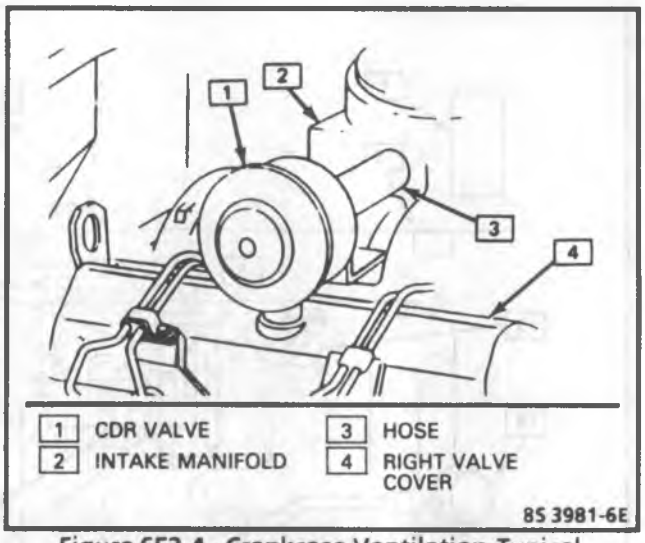

Figure 6E2-4 - Crankcase Ventilation-Typical

DIESEL ELECTRONIC CONTROL SYSTEM

GENERAL DESCRIPTION

PURPOSE

The Diesel Electronic Control (DEC) system is used on a 6.2L (LH6) diesel engine to electronically control the exhaust gas recirculation system, the torque converter clutch, and the cold advance and glow plug system.

The DEC system has the following components:

- Electronic Control Module (ECM).
- Manifold Absolute Pressure (MAP) Sensor.
- Coolant Temperature Sensor.
- "Service Engine Soon" Lamp Driver Module.
- EGR Valve.
- EGR Vent Solenoid.
- EGR Solenoid.
- EPR Valve.
- EPR Solenoid.
- Throttle Position Sensor.
- Engine Speed Sensor.
- ALDL Connector.
- TCC Solenoid.
- Vehicle Speed Sensor.
- Cold Advance Relay.
- Cold Advance Solenoid.
- Glow Plug Relay and Control.
- Glow Plugs.

Refer to the "Exhaust Gas Recirculation" (EGR) system for operational information explaining the ECM control of the EGR valve and EPR valve.

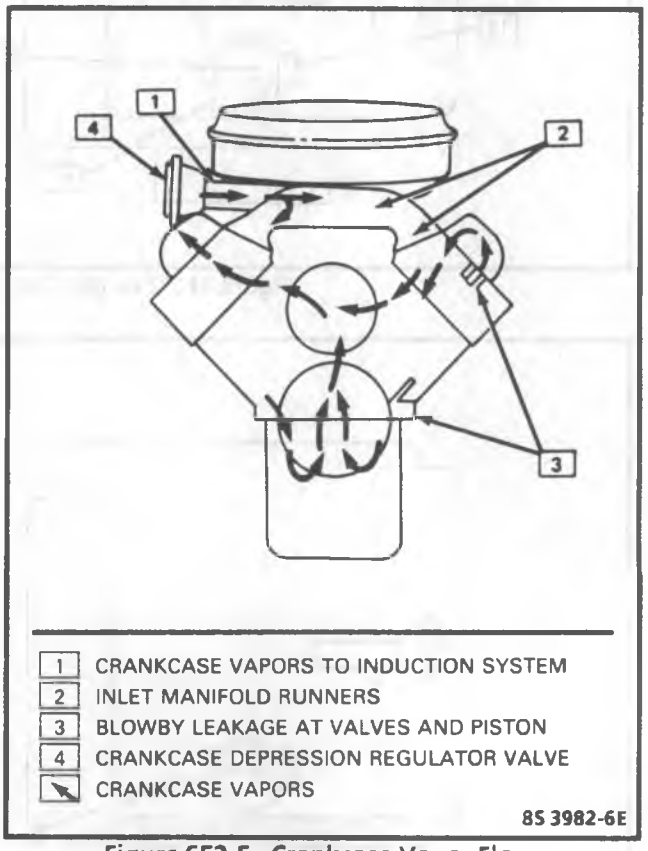

Figure 6E2-5 - Crankcase Vapor Flow

Refer to "Torque Converter Clutch" (TCC) for information and diagnosis, when TCC is controlled by the ECM.

Refer to "Cold Advance and Glow Plug" system for operation, diagnosis and On-Vehicle Service.

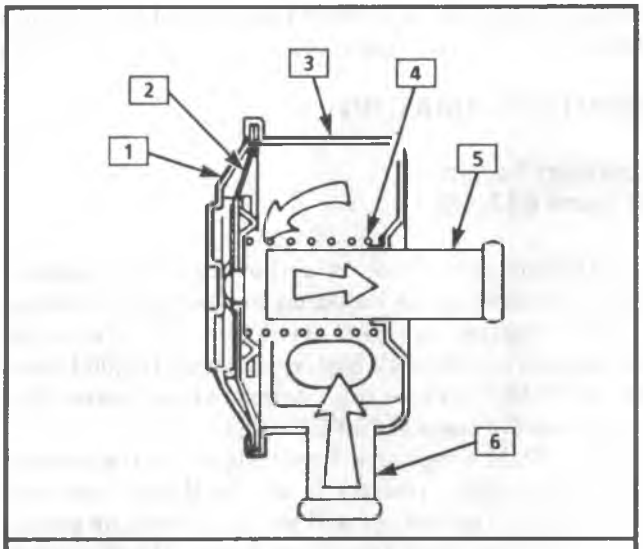

1 COVER
2 DIAPHRAGM
3 BODY
4 SPRING
5 OUTLET TUBE (GASES TO INTAKE MANIFOLD)
6 INLET PORT (GASES FROM CRANKCASE)

9S 5609-6E

Figure 6E2-6 - CDR Valve Operation

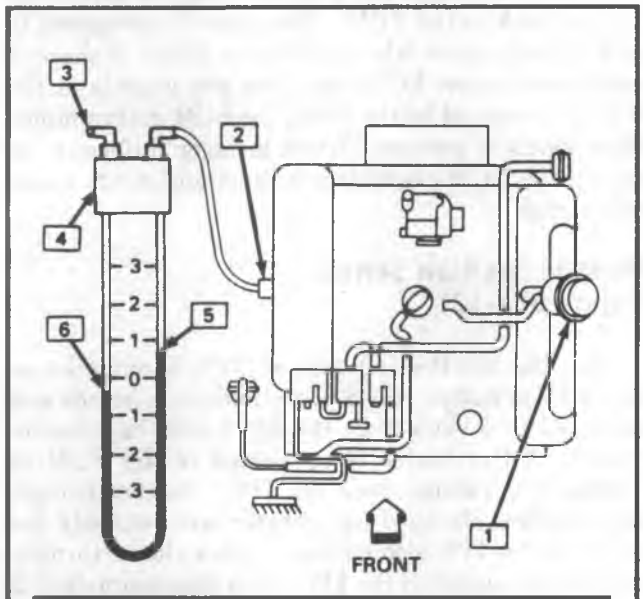

1 CRANKCASE DEPRESSION REGULATOR VALVE
2 ENGINE OIL DIPSTICK TUBE
3 VENT TO ATMOSPHERE
4 MANOMETER — J23951
5 1/2" ABOVE ZERO (SEE EXAMPLE)
6 1/2" BELOW ZERO (SEE EXAMPLE)

8S 3980-6E

Figure 6E2-7 - CDR Valve Test

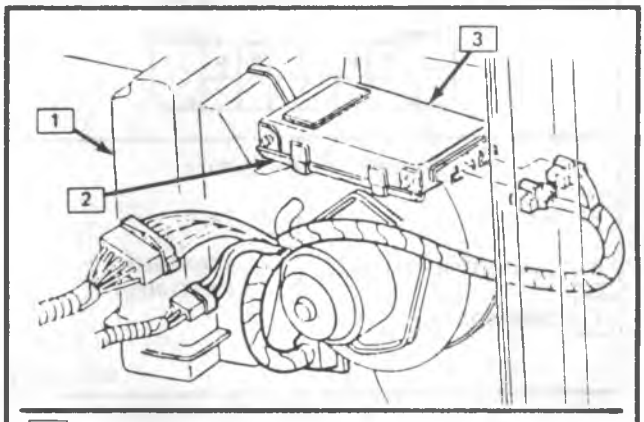

1 HEATER AND A C MODULE
2 RETAINER
3 ELECTRONIC CONTROL MODULE

7S 3763-6E

Figure 6E2-8 - Electronic Control Module (R/V Series)

ELECTRONIC CONTROL MODULE (Figure 6E2-8)

The Electronic Control Module (ECM) is located in the passenger compartment and is the control center of the diesel electronic control system.

The ECM constantly looks at the information from various sensors, and controls the EGR, TCC, and cold advance/glow plug systems.

The ECM performs the diagnostic function of the DEC system. It can recognize operational problems, alert the driver through the "Service Engine Soon" light, and store a code or codes, which identify the problem areas to aid the technician in making repairs. See "Diagnosis" section for more information.

The ECM is designed to process the various input information, and then sends the necessary electrical responses to control the above systems.

NOTICE: The ECM must be maintained at a temperature below 85°C (185°F) at all times. This is most essential if the vehicles put through a paint baking process. The ECM will become inoperative if its temperature exceeds 85°C (185°F). Therefore, it is recommended that temporary insulation be placed around the ECM during the time the vehicle is in a paint oven or other high temperature process.

The ECM is serviced in two parts. Inside the ECM is a replaceable component called a PROM (Programmable Read Only Memory), because information can be programmed into the unit for specific calibrations required for a specific vehicle/engine combination.

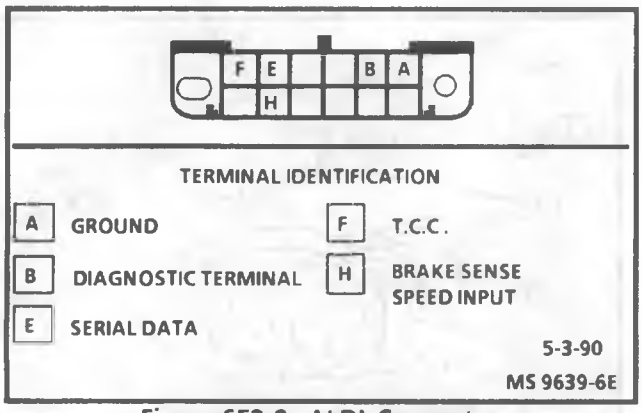

Figure 6E2-9 - ALDL Connector

The ECM is supplied without a PROM for service and is called a controller. This allows one controller to be used with several different PROMs.

ALDL CONNECTOR (Figure 6E2-9)

The twelve terminal connector Assembly Line Diagnostic Link (ALDL) is wired to the ECM, and is located under the instrument panel.

This connector has terminals that are used to diagnose the system. The following terminals are used:

A - This terminal provides a ground circuit to other terminals.

B - This terminal is the "diagnostic terminal" for the ECM. When grounded to "A" terminal, the "Service Engine Soon" light will flash codes.

E - This terminal is used to diagnose the "Service Engine Soon" light. This terminal also is the Serial Data Line.

F - This terminal is used to diagnose the TCC system and is wired to the ground side of the TCC Solenoid.

H - This terminal is used to diagnose the brake system. Refer to Section 5 for additional information.

"SERVICE ENGINE SOON" LAMP

The ECM performs the diagnostic function of the EGR and TCC Systems. It can recognize operational problems, and alert the driver through the "Service Engine Soon" lamp on the instrument panel. The ECM stores a code, which will identify the problem area to aid the technician in making a repair. See the "Diagnosis" section for more information on how the "Service Engine Soon" light is used to identify a code.

WIRE HARNESS AND CONNECTORS

A wiring harness electrically connects the ECM to various sensors, solenoids, and relays within the system. Many connectors in the engine compartment are environmentally protected, because of the system's low voltages and current levels.

INPUT INFORMATION

Coolant Sensor (Figure 6E2-10)

The coolant sensor is a thermistor (a resistor, which changes value based on temperature mounted in the engine coolant stream). Low coolant temperature produces a high resistance (100,000 ohms at -40°C/-40°F), while high temperature causes low resistance (70 ohms at 130°C/266°F).

The ECM supplies a 5 volt signal to the coolant sensor, through a resistor in the ECM and measures the voltage. The voltage will be high, when the engine is cold, and low when the engine is hot. By measuring the voltage, the ECM knows the engine coolant temperature. Engine coolant temperature affects the cold advance and glow plug system.

MAP Sensor (Figure 6E2-11)

A Manifold Absolute Pressure (MAP) sensor, mounted on the left side of the cowl, is used to monitor the amount of vacuum in the EGR circuit. It senses the actual vacuum in the EGR vacuum line and sends a signal back to the ECM. The signal is compared to the EGR duty cycle calculated by the ECM. If there is a difference in the ECM command and what is at the EGR valve sensed by the MAP, the ECM makes minor adjustments to correct. When a major difference is sensed, the ECM recognizes a fault and sends a full EGR signal.

Throttle Position Sensor (Figure 6E2-12)

The Throttle Position Sensor (TPS) is mounted on the injection pump. It is a potentiometer with one end connected to 5 volts from the ECM and the other to ground. A third wire is connected to the ECM to measure the voltage from the TPS. As the throttle valve angle is changed (accelerator pedal moved), the output of the TPS also changes. At a closed throttle position, the output of the TPS is low (approximately .5 volt). As the throttle valve opens, the output increases so that, at wide open throttle, the output voltage should be approximately 5 volts.

Engine Speed Sensor

The engine speed sensor is a camshaft driven pick-up, mounted at the center rear of the engine.

It is sourced by 5 volt reference and allows the ECM to measure engine rpm by the number of times

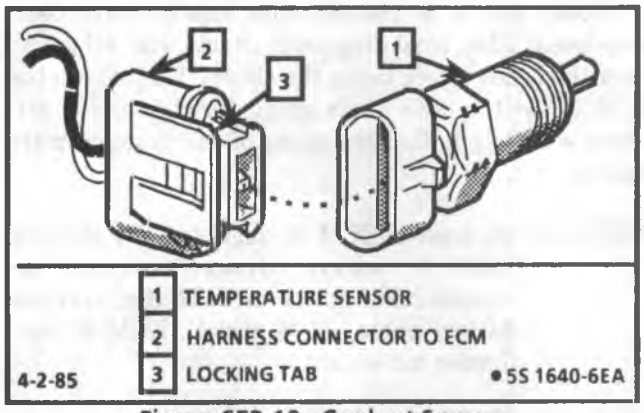

Figure 6E2-10 - Coolant Sensor

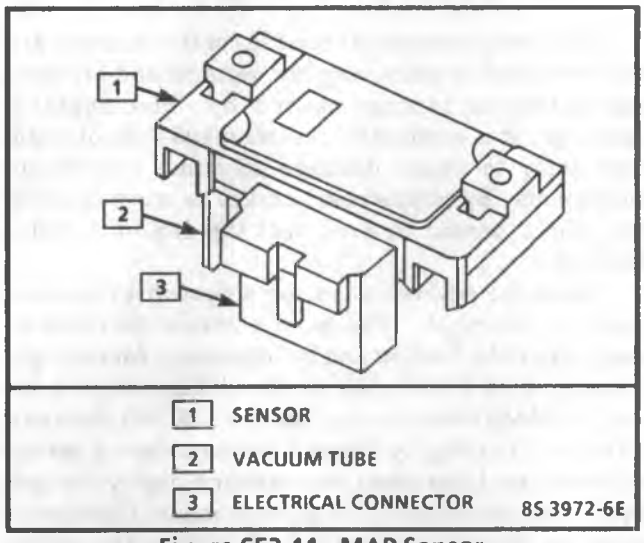

Figure 6E2-11 - MAP Sensor

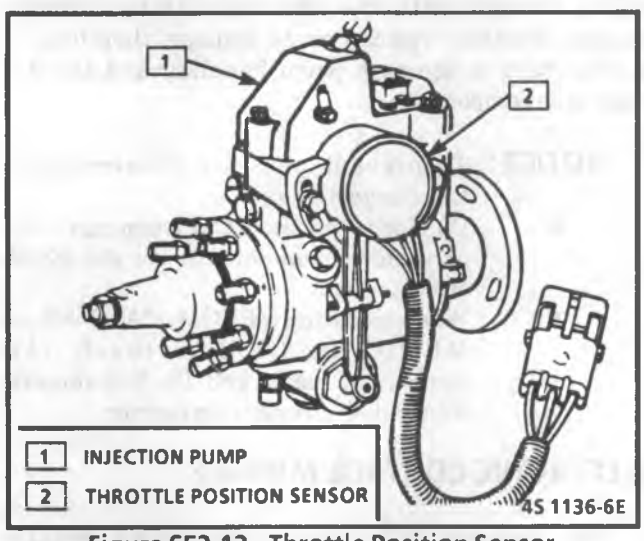

Figure 6E2-12 - Throttle Position Sensor

the voltage is pulsed. The engine speed sensor pulses 4 times per revolution.

Vehicle Speed Sensor

The Vehicle Speed Sensor (VSS) is mounted on the transmission. The ECM will calculate vehicle speed based on a series of pulses provided by the vehicle speed sensor through the Digital Ratio Adapter Controller (DRAC). This calculation is used to apply the transmission converter clutch.

DIAGNOSIS

GENERAL INFORMATION

The diesel electronic control system has a diagnostic system built into the ECM to indicate a failed circuit. An amber "Service Engine Soon" light, on the instrument panel, will illuminate if a problem has been detected when the engine and vehicle are running. This light is also used for a bulb and system check.

The system requires a "Scan" tool, test light, ohmmeter, digital voltmeter with 10 megohms impedance (J 29125A), vacuum gage, and jumper wires for diagnosis.

The diagnosis of the diesel electronic control system should always start with the diesel diagnostic circuit check. This will determine if the DEC system and ECM are working properly.

One of the most important checks that must be done, before any diagnostic procedure, is a careful visual underhood inspection. This can often lead to fixing a problem without further steps. Inspect all vacuum hoses for correct routing, pinches, cuts, or disconnects. Be sure to inspect hoses that are difficult to see beneath the air cleaner, compressor, generator, etc. Inspect all the wires in the engine compartment for correct and good connections, burned, or chaffed spots, pinched wires, or contact with sharp edges or hot exhaust manifolds. This visual inspection is very important. It must be done carefully and thoroughly

Before diagnosing the DEC system, there should be the following basic knowledge:

Basic Electrical Circuits

You should understand the basic theory of electricity, and know the meaning of voltage, amps, and ohms. You should understand what happens in a circuit with an open or a shorted wire. You should be able to read and understand a wiring diagram.

Use of Circuit Testing Tools

You should know how to use a test light, how to connect and use a "Scan" tool, and how to use jumper wires to bypass components to test circuits.

Use of Digital Volt-Ohms Meter (DVM)

You should be familiar with a digital volt-ohm meter. You should be able to measure voltage,

resistance, and current. You should be familiar with the controls of the meter and how to use it correctly.

"Scan" Tool

The tool manufacturers have developed "Scan" tools to interface with the diesel electronic control system, through the ALDL. It supplies a visual reading of most inputs to the ECM and some outputs. Review the tool instruction manual to understand its operation and limitations.

When the tool is connected to the ALDL and cigarette/cigar lighter connector or 12 volts, there should be a visual instruction displayed. If there is no display, or tool reads "No DATA" or "No ALDL," refer to "ECM Check" diagnosis and tool instructions to be sure that 6.2L diesel engine is available in the tool.

With the tool in the code position, the display window will indicate any code stored in the ECM memory. Referring to the applicable code chart, the tool will "Scan" an input to determine if a specific circuit is operating properly.

Diagnostic Mode

With the key "ON" and engine "OFF," jumper ALDL terminal "B" (diagnostic terminal) to "A" (ground). The diesel electronic control system will enter the diagnostic mode code system (Figure 6E2-9). In this mode, the ECM will display a Code 12, by flashing the "Service Engine Soon" light (indicating the system is operating). A Code 12 consists of one flash, followed by a short pause, then two flashes in quick succession. This code will be flashed three times. If no other codes are stored, Code 12 will continue to flash until the diagnostic terminal is ungrounded.

If Code 12 does not display, refer to "ECM Check" chart.

A "hard" code is one which is present when you are working on the vehicle and the condition still exists while working on the vehicle. The chart with the stored code number will lead you to the cause of the problem.

An "intermittent" code is one which does not reset itself, and is not present while you are working on the vehicle. This is often caused by a loose connection.

Clearing Codes

When the ECM sets a code, the "Service Engine Soon" light will come "ON" and a code will be stored in memory. If the problem is intermittent, the light will go out after 10 seconds, when the fault goes away. However, the code will stay in the ECM memory for 50 starts, or until the battery voltage to the ECM is removed. Removing battery voltage for 30 seconds will clear all stored codes.

Codes should be cleared after repairs have been completed. Also, most diagnostic charts will tell you to clear the codes before using the chart. This allows the ECM to set the code while going through the chart, which will help to find the cause of the problem more quickly.

NOTICE: To prevent ECM damage, the key must be "OFF," when disconnecting or reconnecting power to ECM (for example battery cable, ECM pigtail, ECM B fuse, jumper cables, etc.).

Electrostatic Discharge Damage

Electronic components used in control systems are often designed to carry very low voltage, and are very susceptible to damage caused by electrostatic discharge. It is possible for less than 100 volts of static electricity to cause damage to some electronic components. By comparison, it takes as much as 4,000 volts for a person to even feel the zap of a static discharge.

There are several ways for a person to become statically charged. The most common methods of charging are by friction and by induction. An example of charging by friction is a person sliding across a car seat, in which a charge of as much as 25,000 volts can build up. Charging by induction occurs when a person with well insulated shoes stands near a highly charged object and momentarily touches ground. Charges of the same polarity are drained off, leaving the person highly charged with the opposite polarity. Static charges of either type can cause damage, therefore, it is important to use care when handling and testing electronic components.

NOTICE: To prevent possible Electrostatic Discharge damage:

- Do Not touch the ECM connector pins or soldered components on the ECM circuit board.
- When handling a PROM, CAL-PAK or MEM-CAL, Do Not touch the component leads, and Do Not remove integrated circuit from carrier.

ELECTRONIC CONTROL MODULE

The diagnosis of the Electronic Control Module (ECM) starts with the Diesel Diagnostic Circuit Check. The code system indicates a failure of a specific circuit and diagnosis may indicate replacement of the ECM. A Code 52 indicates that the ECM has failed and must be replaced.

If the ECM has been replaced and the condition was not corrected, the following information may be the cause:

- An incorrect ECM or PROM application may cause a malfunction and may, or may not, set a code.
- If the connector at the ECM is the possible problem, the terminal may have to be removed from the connectors in order to properly check them.
- Although the PROM rarely fails, it operates as part of the ECM, therefore, it could be the cause of the problem.
- Although a rare condition, the replacement ECM may be faulty.
- In the case of an intermittent problem, make a careful physical inspection of the system involved.
- A shorted solenoid, relay coil, or harness may cause an ECM to fail and a replacement ECM to fail when it is installed. Use a short tester J 34636, BT-8405, or equivalent, as a fast, accurate means of checking for a short circuit.

PROM

A PROM that has failed or was installed improperly will generally set a Code 51.

COOLANT SENSOR

Code 14 or Code 15 indicates a failure in the coolant sensor circuit.

MAP SENSOR

Code 31 or Code 33 indicates a failure in the MAP sensor circuit.

THROTTLE POSITION SENSOR

Code 21 indicates that there is a shorted TPS circuit. Code 22 indicates that there is an open in the TPS circuit. Code 23 indicates that the throttle position sensor is not calibrated.

VEHICLE SPEED SENSOR

The vehicle speed sensor circuit diagnosis is in the Code 24 chart.

CODE IDENTIFICATION

The "Service Engine Soon" light will only be "ON" if the malfunction exists under the conditions listed below. If the malfunction clears, the light will go out and the code will be stored in the ECM. Any Codes stored will be erased if no problem reoccurs within 50 engine starts.

CODE AND CIRCUIT	PROBABLE CAUSE
Code 12 - No engine speed reference pulse.	No engine speed sensor reference pulses to the ECM. This code is not stored in memory and will only flash while the fault is present. Normal code with ignition "ON," engine not running.
Code 14 - Coolant Sensor High Temperature Indication	Sets if the sensor or signal line becomes grounded for 5 minutes.
Code 15 - Coolant Sensor Low Temperature Indication	Sets if the sensor, connections, or wires open for 5 minutes.
Code 21 - TPS Signal Voltage High	Throttle Position Sensor (TPS) circuit voltage high (open circuit or misadjusted TPS). Engine must run 30 seconds, at curb idle speed, before this code will set.
Code 22 - TPS Signal Voltage Low	Throttle Position Sensor (TPS) circuit voltage low (grounded circuit). Engine must run 2 minutes at 1250 rpm or above before this code will set.
Code 23 - TPS Not Calibrated	Throttle Position Sensor (TPS) circuit. Voltage not between .25 and 1.3 volts at curb idle speed. Engine must run for 30 seconds, at curb idle, before this code will set.
Code 24 - VSS No Vehicle Speed Indication	Vehicle speed sensor (VSS) circuit (open or grounded circuit). Vehicle must operate at road speed for 10 seconds before this code will set.
Code 31 - MAP Sensor Too Low	Absolute Pressure (MAP) circuit signal voltage too low. Engine must run at curb idle for 10 seconds before this code will set.
Code 32 - EGR Loop Error	Exhaust Gas Recirculation (EGR) vacuum circuit has seen improper EGR vacuum. Vehicle must be running at road speed approximately 30 mph (48 Km/h) for 10 seconds before this code will set.
Code 33 - MAP Sensor Too High	Absolute Pressure (MAP) circuit signal voltage too high. Engine must run at curb idle for 10 seconds before this code will set.
Code 51 - PROM	Faulty or improperly installed PROM. It takes approximately 10 seconds before this code will set.
Code 52 - ECM	Fault in ECM circuit. It takes 10 seconds before this code will set.
Code 53 - Five volt Reference Overload	5 volt reference (Vref) circuit overloaded (grounded circuit). It takes 10 seconds before this Code will set.

2-7-90
8S 3990-6E

Figure 6E2 - 13 - ECM Code System

BLANK

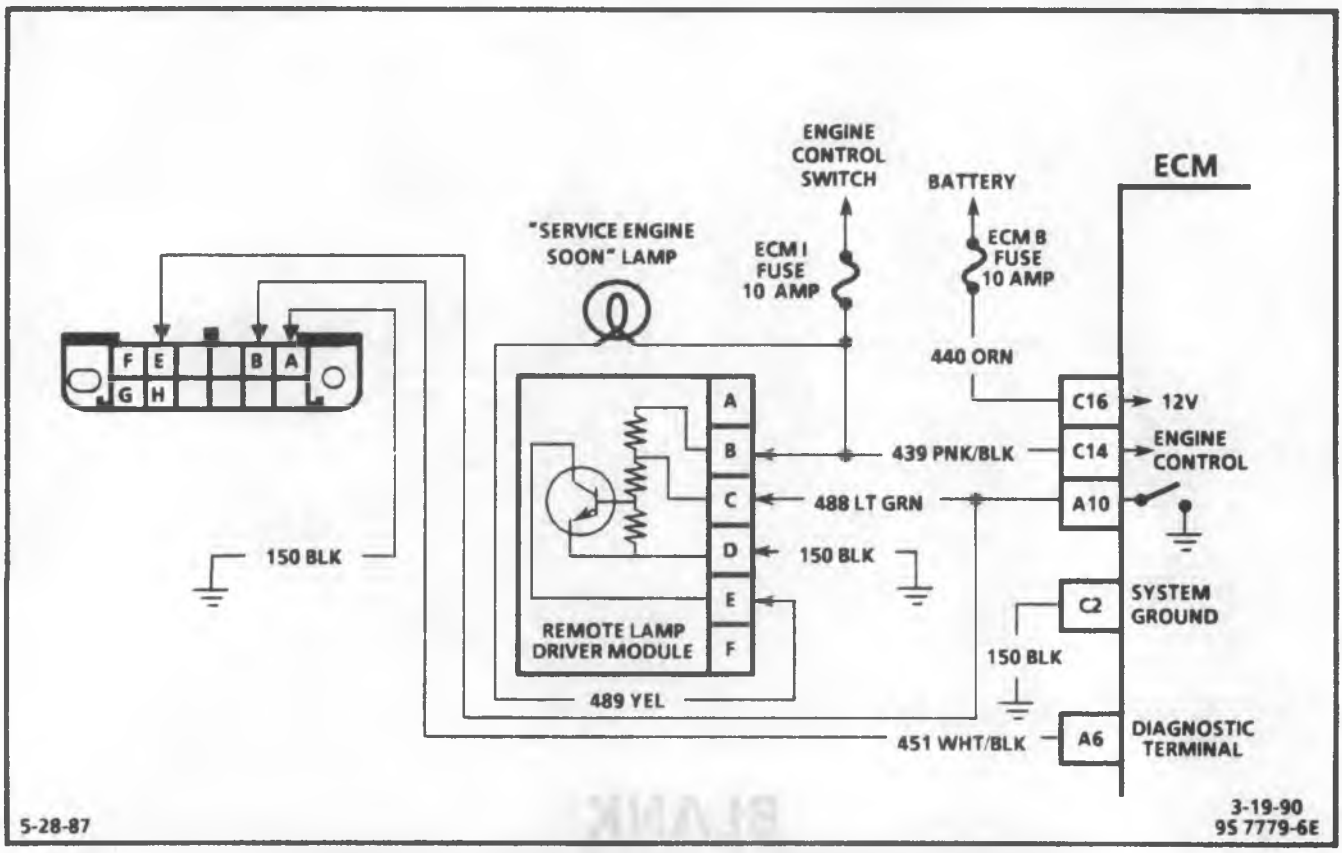

DIESEL DIAGNOSTIC CIRCUIT CHECK

6.2L (LH6) DIESEL

Circuit Description:

The ECM provides the diagnostic logic to detect faults in the systems that the ECM monitors or controls. The ECM, when it recognizes a fault, has the capability of turning a "Service Engine Soon" (SES) light "ON" and storing a code. Furthermore, if the condition corrects itself, the "Service Engine Soon" signal will be turned "OFF" immediately following the correction.

The ECM recognizes errors in engine speed, vehicle speed vacuum errors in the EGR vacuum loop, via the MAP sensor, and electrical faults involving the 5 volt reference circuit.

The ECM is a multifunction engine controller that controls the following:

1. Exhaust Gas Recirculation (EGR)
2. Exhaust Pressure Regulation (EPR)
3. Torque Converter Clutch Control (TCC)
4. System Diagnosis
5. Cold Advance and Glow Plug

The ECM monitors the following inputs, to allow proper engine control of the above:

1. Engine rpm
2. Manifold Absolute Pressure (MAP) used to monitor EGR vacuum
3. Throttle Position Sensor (TPS)
4. Vehicle Speed Sensor (VSS)
5. Coolant Temperature

All diagnosis should start with the Diesel Diagnostic Circuit Check on the facing page.

After any repair to the diesel electronic control system, the diesel diagnostic circuit check must be repeated.

A brief description of operation is included with each system check or code chart.

Test Description: Number(s) below refer to the circled number(s) on the diagnostic chart.

1. Checks for proper operation of the "Service Engine Soon" light. With the key "ON," and the engine not running, the light should be "ON" steady.
2. Grounding the diagnostic terminal will flash a Code 12 and any stored codes. The light must go "ON" and "OFF," for a proper code. If the light goes from "bright" to "dim," this is not considered a code

DIESEL DIAGNOSTIC CIRCUIT CHECK

6.2L (LH6) DIESEL

- ENGINE AT NORMAL OPERATING TEMPERATURE.
- MAKE PHYSICAL INSPECTION OF ENGINE COMPARTMENT
- MAKE CERTAIN ALL ELECTRICAL COMPONENTS ARE CORRECTLY CONNECTED.
- CHECK ALL VACUUM HOSES THAT MAY BE DISCONNECTED, PINCHED OR BURNED.
- CHECK EGR VALVE FOR VACUUM LEAK AND FREE MOVEMENT.
- CHECK FOR PLUGGED EGR VENT FILTER AND REPLACE IF REQUIRED.

(1)
- KEY "ON," ENGINE STOPPED, DIAGNOSTIC TERMINAL NOT GROUNDED.
- NOTE "SERVICE ENGINE SOON" LIGHT.

LIGHT "ON" STEADY

LIGHT FLASHES INTERMITTENTLY OR A CODE

LIGHT "OFF"

SEE "SERVICE ENGINE SOON" LIGHT INOPERATIVE CHART

(2) GROUND DIAGNOSTIC TERMINAL AND NOTE "SERVICE ENGINE SOON" LIGHT

CHECK FOR GROUNDED CKT 451 TO ECM TERMINAL "A6". IF CKT OK, IT'S A FAULTY ECM.

- FLASHES CODE 12 AND ANY OTHER CODE.
- REMOVE DIAGNOSTIC TERMINAL GROUND.
- START ENGINE, AND RUN FOR 2 MINUTES OR UNTIL THE "SERVICE ENGINE SOON" LIGHT COMES "ON."

DOES NOT FLASH CODE 12

GO TO "ECM CHECK" CHART

NO LIGHT

- CODE SYSTEM OK.
- KEY "OFF."
- INSTALL VACUUM GAGE IN PLACE OF EGR VALVE.
- START AND RUN ENGINE AT 850 RPM IN PARK OR NEUTRAL.
- NOTE VACUUM GAGE.

"SERVICE ENGINE SOON" LIGHT "ON"

- CHECK CODE.
- IF THERE IS CODE 51, 52, OR 53, GO TO THAT CODE CHART FIRST.
- FOR ANY OTHER CODE, START WITH LOWEST NUMBER CODE CHART.

VACUUM ABOVE 41 kPa (12").

- VEHICLE IN PARK OR NEUTRAL
- QUICKLY FLASH THROTTLE
- OBSERVE VACUUM GAGE MOVEMENT

VACUUM PULSES OR NO VACUUM

CHECK VACUUM HOSE ROUTINGS FOR LEAKS OR RESTRICTIONS

VACUUM GAGE DROPS FROM ABOVE 41 kPa (12") TO NEAR ZERO.

- KEY "OFF."
- RECONNECT EGR VACUUM HOSE
- CONNECT VACUUM GAGE IN PLACE OF EPR VALVE
- START ENGINE.
- OBSERVE VACUUM GAGE MOVEMENT.
- VACUUM SHOULD BE ABOVE 50 kPa (15"), WITH THE SOLENOID ELECTRICAL CONNECTOR IN PLACE, 0 kPa (0") WITH IT DISCONNECTED.
  IS IT?

VACUUM GAGE DROPS ONLY ABOUT 1/2 DISTANCE FROM FULL VACUUM

CHECK VACUUM HOSE ROUTINGS FOR LEAKS OR RESTRICTIONS. IF OK, REPLACE THE EGR VENT SOLENOID FILTER.

YES

ECM CONTROLS SYSTEM IS OK. SEE "DIESEL ENGINE DIAGNOSIS" IF DRIVEABILITY PROBLEM EXISTS.

NO

GO TO "EPR SOLENOID ELECTRICAL CHECK" CHART

2-2-90
8S 3955-6E

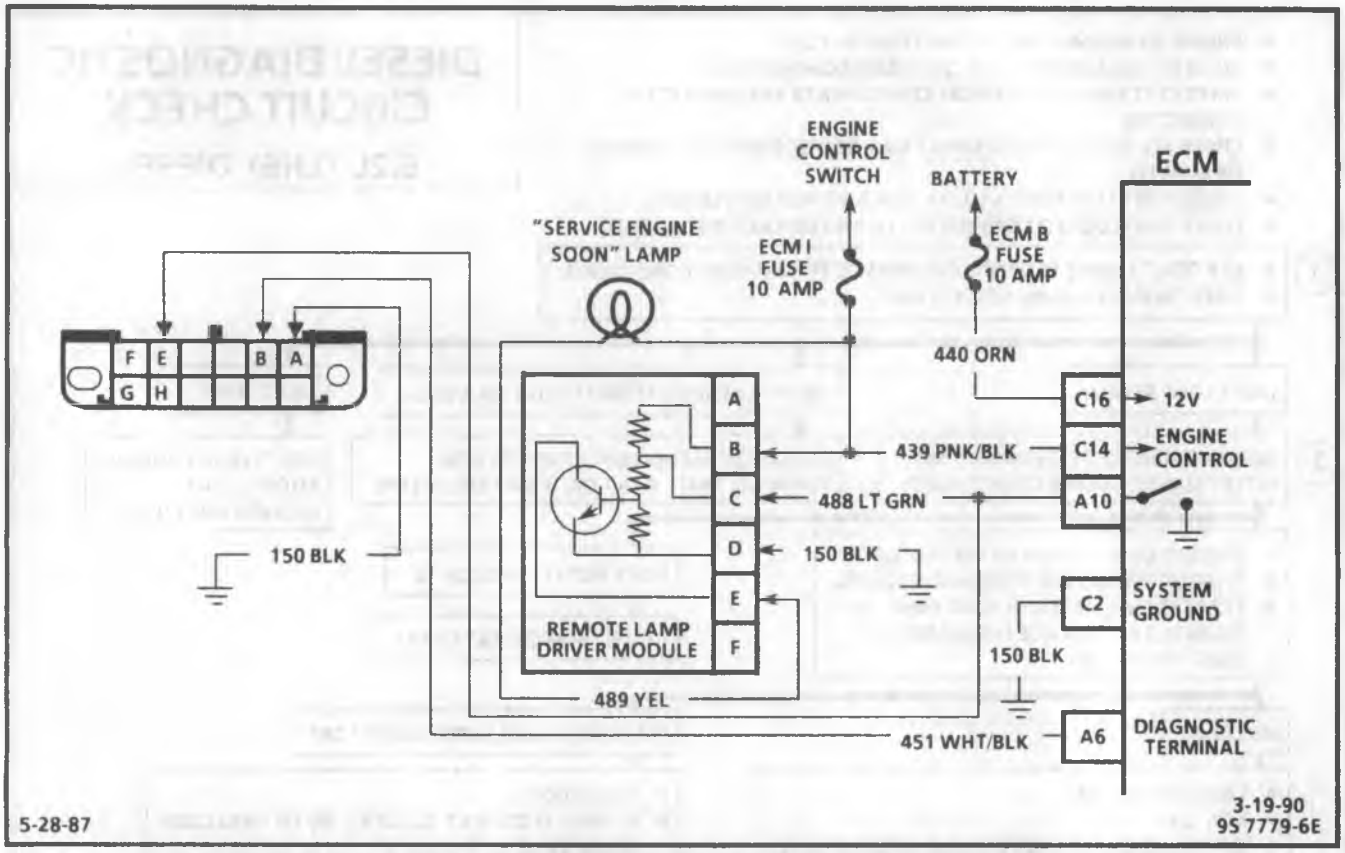

"SERVICE ENGINE SOON" LIGHT INOPERATIVE

6.2L (LH6) DIESEL

Circuit Description:

When the engine is started, the ECM grounds terminal "A10" to turn "OFF" the "Service Engine Soon" light. When ALDL terminal "B" is grounded it alternately grounds and opens "A10" to flash a code.

Test Description: Number(s) below refer to the circled number(s) on the diagnostic chart.

1. This checks for open ECM fuse or open in "Service Engine Soon" light circuit, including I/P connector, printed circuit, and "Service Engine Soon" lamp. Normal response is lamp "ON."
2. This checks for a shorted ECM. Grounded ECM terminal "A10" will turn the "Service Engine Soon" light "OFF." If disconnecting ECM turns light "ON," ECM is shorted. Normal response is lamp "ON."
3. This checks for grounded CKT 487 from terminal "C" of lamp driver, to ECM terminal "A10", an open CKT 439 to terminal "B" of lamp driver, a bad ground, or faulty lamp driver. A normal reading is about 9 to 11 volts, because of the drop through the upper resistor in the lamp driver. Over 11 volts indicates there is no drop in the lamp driver. This indicates a bad ground or faulty lamp driver.
4. This step checks for an open in the wire to terminal "B". Normal voltage is approximately battery voltage.
5. This checks for a grounded CKT 487 from driver terminal "C" to ECM terminal "A10". Normal response is light "ON."

"SERVICE ENGINE SOON" LIGHT INOPERATIVE
6.2L (LH6) DIESEL

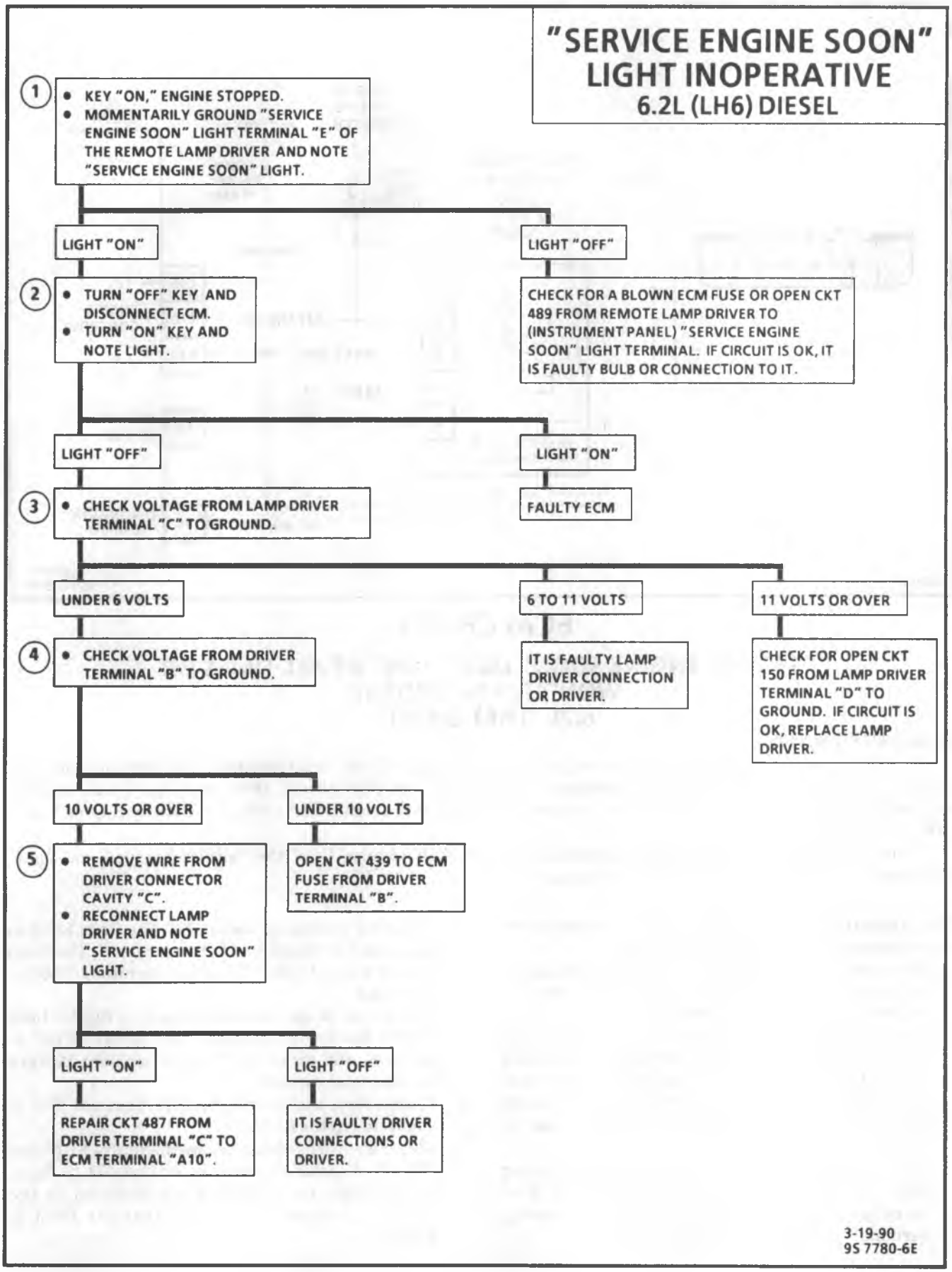

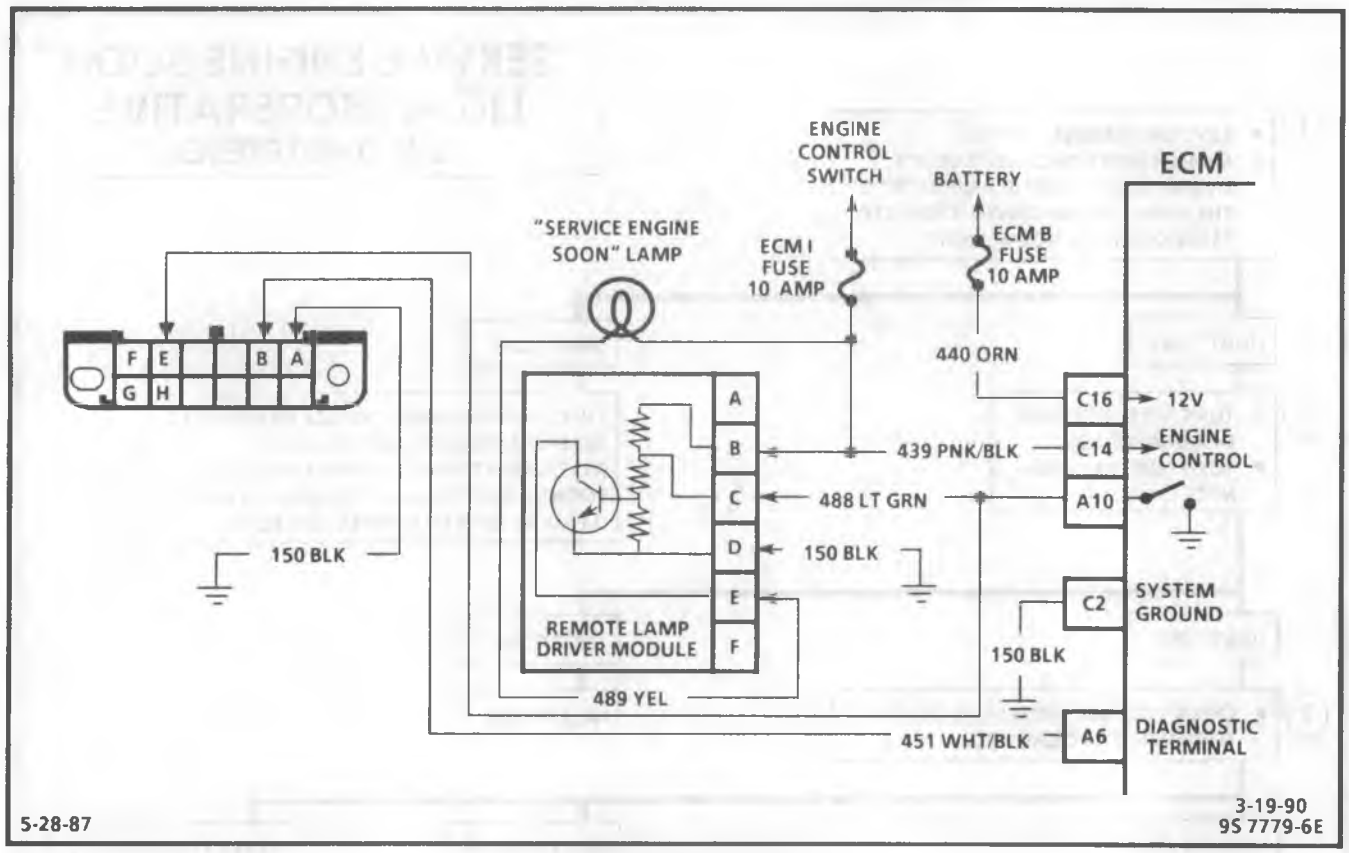

ECM CHECK

"SERVICE ENGINE SOON" LIGHT "ON" AT ALL TIMES OR WON'T FLASH CODE 12 6.2L (LH6) DIESEL

Circuit Description:

The ECM check is made to determine why the "Service Engine Soon" light remains "ON" or does not flash Code 12. Normally, the ECM will not recognize a fault for at least 10 seconds after start-up. If the "Service Engine Soon" remains "ON," the ECM has lost power, ground, or the signal that turns the "Service Engine Soon" "OFF" has been lost.

When the engine is started, the ECM grounds terminal "A10" to turn "OFF" the "Service Engine Soon" light. It, alternately, grounds and opens it to flash a code.

Test Description: Number(s) below refer to the circled number(s) on the diagnostic chart.

1. This step checks for short to battery voltage in wire to terminal "C" or faulty lamp driver. Normal voltage reading is 9-11 volts.
2. This step checks to see if problem is related to the ECM or the lamp driver. Normally, grounding terminal "C" should turn lamp "OFF." If it does, the problem is related to the ECM and its wiring. If not, it is related to the lamp driver and its wiring.
3. Grounding terminal "A10" at ECM and finding light "ON," indicates an open in CKT 487 to terminal "C" of lamp driver. Normally, grounding terminal "A10" should turn lamp "OFF."
4. This step checks for open CKT 451 from ECM to diagnostic terminal in ALDL connector. The lamp should flash Code 122, when terminal "A6" is grounded.
5. Checks for proper voltage supply to ECM. Both should read over 9 volts. Terminal "C14" is ignition, and terminal "C16" is constant battery for long term memory.
6. Checks for a bad ground to ECM; terminal "C2" is connected in the ECM.
7. This step distinguishes between a faulty ECM and PROM. Normal response is for Code 51 to flash, even though the PROM is not installed in the ECM. If it doesn't, it means that the ECM is faulty.

ECM CHECK

"SERVICE ENGINE SOON" LIGHT "ON" AT ALL TIMES OR WON'T FLASH CODE 12 6.2L (LH6) DIESEL

1
- PERFORM "DIESEL DIAGNOSTIC CIRCUIT CHECK" FIRST.
- CHECK ECM "I" FUSE AND ECM "B" FUSE.
- BATTERY VOLTAGE MUST BE ABOVE 11 VOLTS.
- REMOVE GROUND FROM "DIAGNOSTIC" TERMINAL.
- KEY "ON," ENGINE STOPPED.
- CHECK VOLTAGE FROM LAMP DRIVER TERMINAL "C" TO GROUND.

UNDER 11 VOLTS → **2**

11 VOLTS OR MORE → CHECK FOR SHORTED CKT. 487 TO B+. IF CKT IS OK, REPLACE LAMP DRIVER.

2
- GROUND LAMP DRIVER TERMINAL "C" AND NOTE "SERVICE ENGINE SOON" LIGHT.

LIGHT "OFF" → **3**

LIGHT "ON" →
- DISCONNECT DRIVER AND NOTE "SERVICE ENGINE SOON" LIGHT.

LIGHT "OFF" → FAULTY CONNECTION AT DRIVER TERMINAL "C" OR DRIVER.

LIGHT "ON" → REPAIR GROUNDED CKT 489 FROM DRIVER TERMINAL "E."

3
- GROUND ECM TERMINAL "A10" AND NOTE "SERVICE ENGINE SOON" LIGHT.

LIGHT "OFF" → **4**

LIGHT "ON" → REPAIR OPEN CKT 487.

4
- GROUND ECM TERMINAL "A6" AND NOTE "SERVICE ENGINE SOON" LIGHT.

NO CODE 12 → **5**

FLASHES CODE 12 → REPAIR OPEN CKT 150 BETWEEN ECM TERMINAL "A6" AND "DIAGNOSTIC" TERMINAL.

5
- DISCONNECT GROUND FROM ECM TERMINAL "A6"
- CHECK VOLTAGE FROM ECM TERMINALS "C14" & "C16" TO GROUND.

BOTH 9 VOLTS OR OVER → **6**

EITHER UNDER 9 VOLTS → REPAIR POOR CONNECTION OR OPEN IN CKT TO TERMINAL THAT READS LOW.

6
- CHECK VOLTAGE FROM ECM TERMINAL "C2" TO GROUND.

UNDER 1 VOLT → **7**

1 VOLT OR OVER → REPAIR OPEN OR POOR CONNECTIONS FROM TERMINAL "C2" TO GROUND.

7
- KEY "OFF."
- REMOVE PROM.
- TURN KEY "ON."
- AFTER 30 SECONDS CHECK FOR CODE 51.

NO CODE 51 → FAULTY ECM.

CODE 51 → CHECK FOR PROPER PROM INSTALLATION. IF OK, INSTALL NEW PROM AND CHECK FOR CODE 12. IF CODE 12 DOES NOT FLASH, REPLACE ECM.

PERFORM "DIESEL DIAGNOSTIC CIRCUIT CHECK" AFTER ANY REPAIR

3-19-90
9S 7781-6E

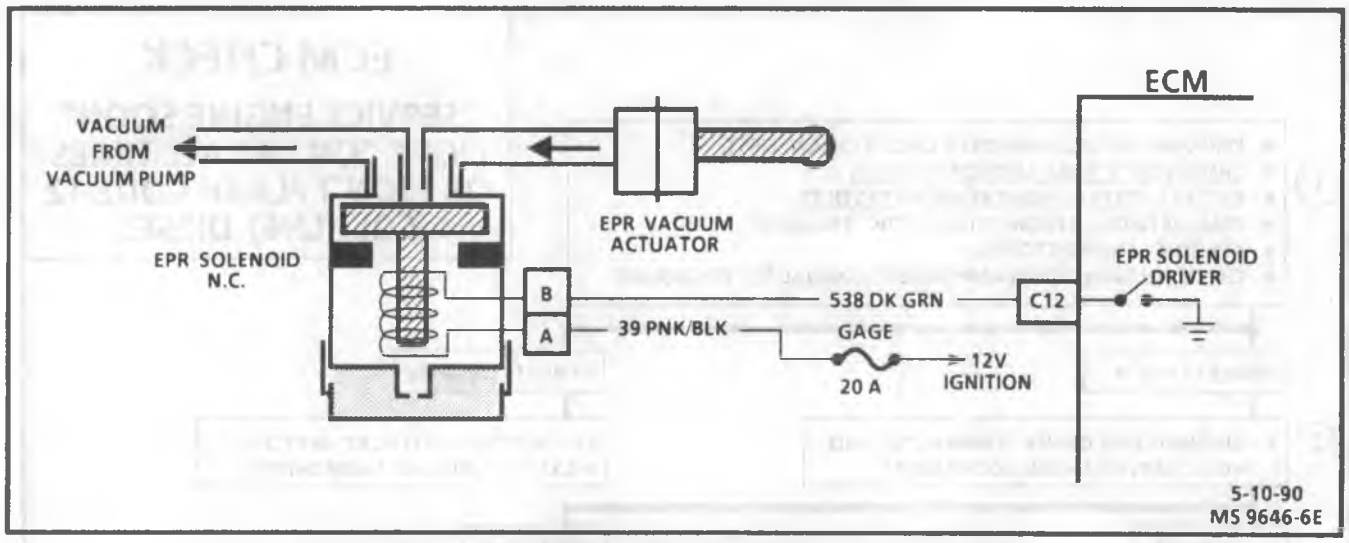

EPR SOLENOID ELECTRICAL CHECK

6.2L (LH6) DIESEL

Circuit Description:

The EPR solenoid controls vacuum to the EPR valve. The EPR solenoid, when energized, allows vacuum pump vacuum to close the EPR valve and increase exhaust back pressure for proper EGR operation. The solenoid is supplied 12 volts by the key switch and the ECM completes the ground to energize the solenoid and turn EPR "ON."

Test Description: Number(s) below refer to circled number(s) on diagnostic chart.

1. Checks for short to ground or a faulty ECM signal to EPR solenoid. Test light should normally be "OFF."
2. Checks for signal to energize EPR solenoid with engine at idle. If the test light is "ON," electrical circuits to the solenoid are OK.
3. Checks for voltage or an open circuit from terminal "B" to the ECM, terminal "C12".

EPR SOLENOID ELECTRICAL CHECK
6.2L (LH6) DIESEL

- PERFORM DIESEL DIAGNOSTIC CHECK FIRST.
- CHECK FOR PLUGGED EGR VENT FILTER.

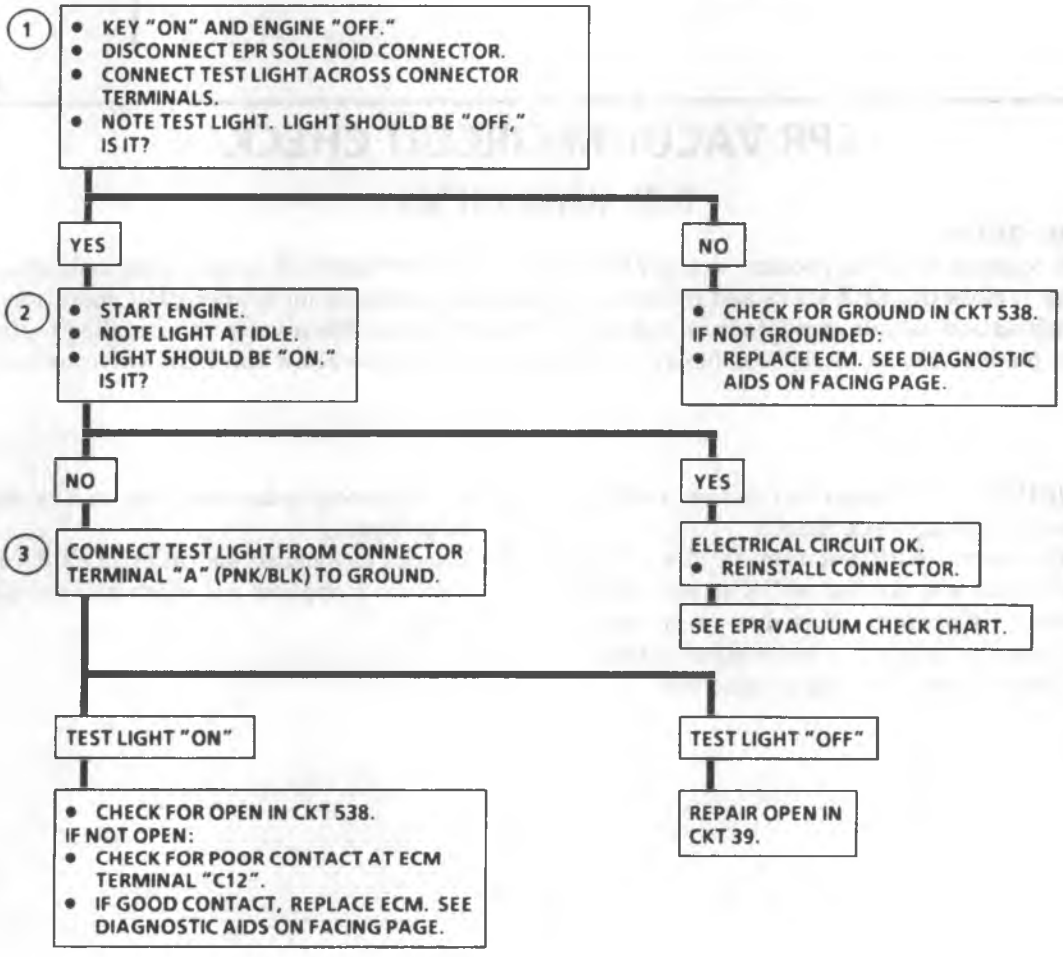

5-3-90
MS 9649-6E

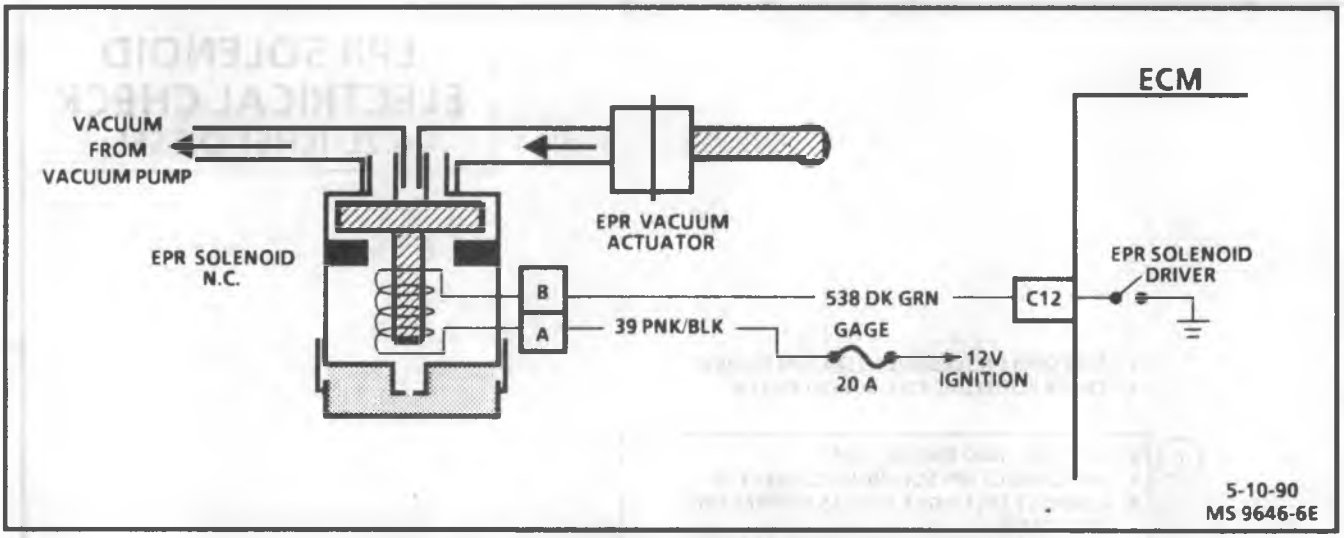

EPR VACUUM CIRCUIT CHECK

6.2L (LH6) DIESEL

Circuit Description:

The EPR solenoid controls vacuum to the EPR valve. The EPR solenoid, when energized, allows vacuum pump vacuum to close the EPR valve and increase exhaust back pressure for proper EGR operation. The EPR valve is a combination vacuum actuator and exhaust restrictor plate. When vacuum is applied to the actuator, the restrictor plate closes to increase exhaust system back pressure to allow the EGR valve to function more efficiently.

Test Description: Number(s) below refer to circled number(s) on diagnostic chart.

1. Checks for normal EPR vacuum at idle. Since electrical circuit was verified as OK on prior chart, if no vacuum is present, it is due to no source vacuum (vacuum pump) or a restriction or leak in vacuum lines to valve, including the solenoid.
2. EPR solenoid is de-energized, so no vacuum should be present.
3. Checks for normal operation of EPR valve. When vacuum is applied, valve actuator should move and hold.

EPR VACUUM CIRCUIT CHECK

6.2L (LH6) DIESEL

- PERFORM EPR SOLENOID ELECTRICAL CHECK FIRST.
- CHECK FOR PLUGGED EGR VENT FILTERS.

(1)
- INSTALL VACUUM GAGE IN PLACE OF EPR VACUUM ACTUATOR.
- START ENGINE.
- AT IDLE, OBSERVE VACUUM
- VACUUM SHOULD BE ABOVE 50 KPA (15").
  IS IT?

YES

(2)
- DISCONNECT ELECTRICAL CONNECTOR.
- OBSERVE VACUUM GAGE AT IDLE.
- THERE SHOULD BE NO VACUUM.

VACUUM PRESENT

REPLACE SOLENOID ASSEMBLY.

NO VACUUM

(3)
- KEY "OFF"
- INSTALL VACUUM PUMP ON EPR VACUUM ACTUATOR.
- PUMP UP TO 50 KPA (15") VACUUM AND OBSERVE EPR VACUUM ACTUATOR MOVEMENT.

NO ACTUATOR MOVEMENT.

REPLACE EPR VALVE.

VACUUM ACTUATOR MOVES.

NO TROUBLE FOUND; SYSTEM OK.

NO

CHECK VACUUM SOURCE AT SOLENOID ASSEMBLY.

ABOUT 50 KPA (15") VACUUM.

- CHECK FOR PLUGGED OR LEAKY VACUUM HOSE TO EPR VALVE.
- IF OK, REPLACE SOLENOID ASSEMBLY.

BELOW 50 KPA (15") VACUUM.

- CHECK FOR PLUGGED OR LEAKY VACUUM HOSE TO THE VACUUM PUMP. IF OK,
- CHECK VACUUM PUMP OUTPUT AND REPAIR.

2-2-90
BS 3961-6E

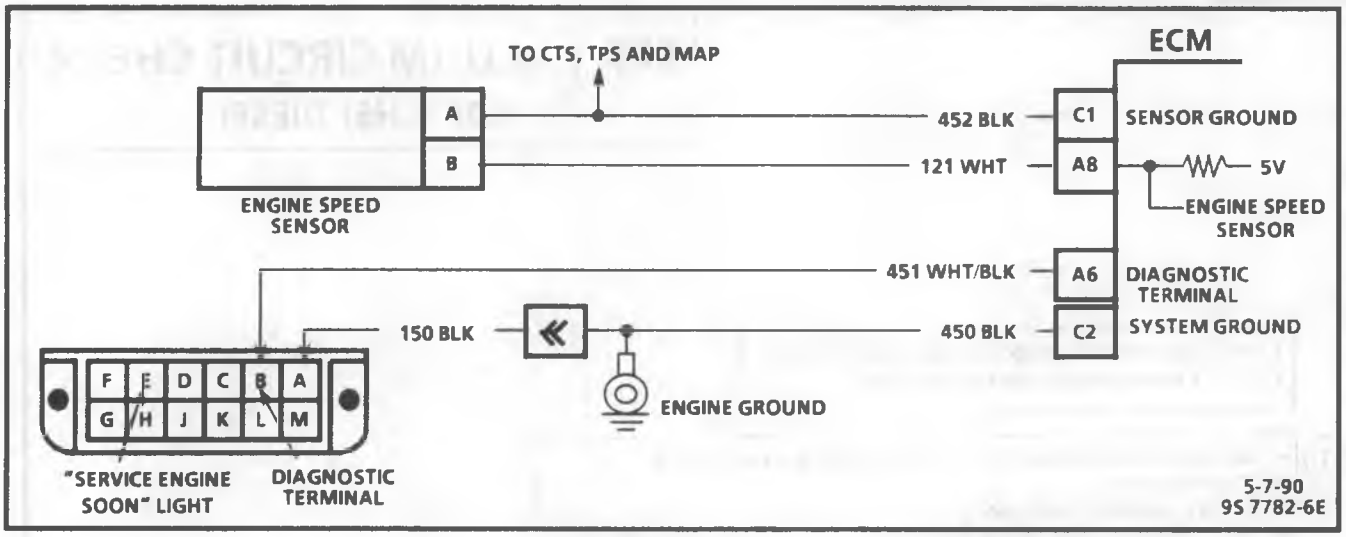

CODE 12

NO REFERENCE PULSE
6.2L (LH6) DIESEL

Circuit Description:

Code 12 means the ECM is "ON" and sees no reference pulse from the engine speed sensor. This is normal code with the key "ON" and engine not running. Code 12 is not stored and will only flash when the fault is present. With the engine running, Code 12 could mean an open or ground in the engine speed sensor reference circuit.

The engine speed sensor is a camshaft driven pick-up, mounted at the center rear of the engine.

It is sourced by 5 volt reference and allows the ECM to measure engine rpm by the number of times the voltage is pulsed. The engine speed sensor pulses 4 times per revolution.

Test Description: Number(s) below refer to the circled number(s) on the diagnostic chart.

1. Check for a good 5 volt reference. Normally, the ECM should be at about 5 volts for fully charged batteries.
2. Checks for proper ECM voltage to the engine speed sensor. If the circuit to the ECM is complete, normal voltage will be about 5 volts with the harness disconnected from the sensor.
3. Checks for good sensor ground circuit (CKT 452) from sensor to ECM. Since Step 2 indicated an open, the results of this step indicates whether the open is in the wire or at the ECM.

CODE 12

NO REFERENCE PULSE 6.2L (LH6) DIESEL

1. KEY "ON" AND ENGINE "OFF".
   - CHECK VOLTAGE WITH DVM FROM ALDL TERMINAL "B" TO GROUND.

ABOUT 5 VOLTS

2. DISCONNECT ENGINE SPEED SENSOR CONNECTOR.
   - WITH KEY "ON", CHECK VOLTAGE FROM CONNECTOR TERMINAL "B" TO "A" (ECM SIDE OF HARNESS).

LESS THAN 4 VOLTS

3. CHECK VOLTAGE FROM CONNECTOR TERMINAL "B" TO GROUND.

ABOUT 5 VOLTS

- RECONNECT ENGINE SPEED SENSOR.
- CHECK VOLTAGE FROM ECM CONNECTOR TERMINAL "C1" TO GROUND.

UNDER 4 VOLTS

REPAIR OPEN IN CKT 452 BETWEEN ENGINE SPEED SENSOR CONNECTOR AND SPLICE IN CIRCUIT.

ABOUT 5 VOLTS

- CHECK FOR GOOD CONTACT BETWEEN ECM AND TERMINAL "C1".
- IF GOOD TERMINAL CONTACT, REPLACE ECM.

UNDER 4 VOLTS

- CHECK FOR OPEN OR GROUND IN CKT 121.
- IF NOT GROUNDED OR OPEN, CHECK FOR GOOD TERMINAL CONTACT BETWEEN ECM AND TERMINAL "A8".
- IF GOOD TERMINAL CONTACT, REPLACE ECM.

IT IS FAULTY ENGINE SPEED SENSOR CONNECTOR OR SENSOR.

UNDER 4 VOLTS

- CHECK FOR GROUNDED CKT 451.
- IF NOT GROUNDED, REPLACE ECM.

2-2-90
8S 3964-6E

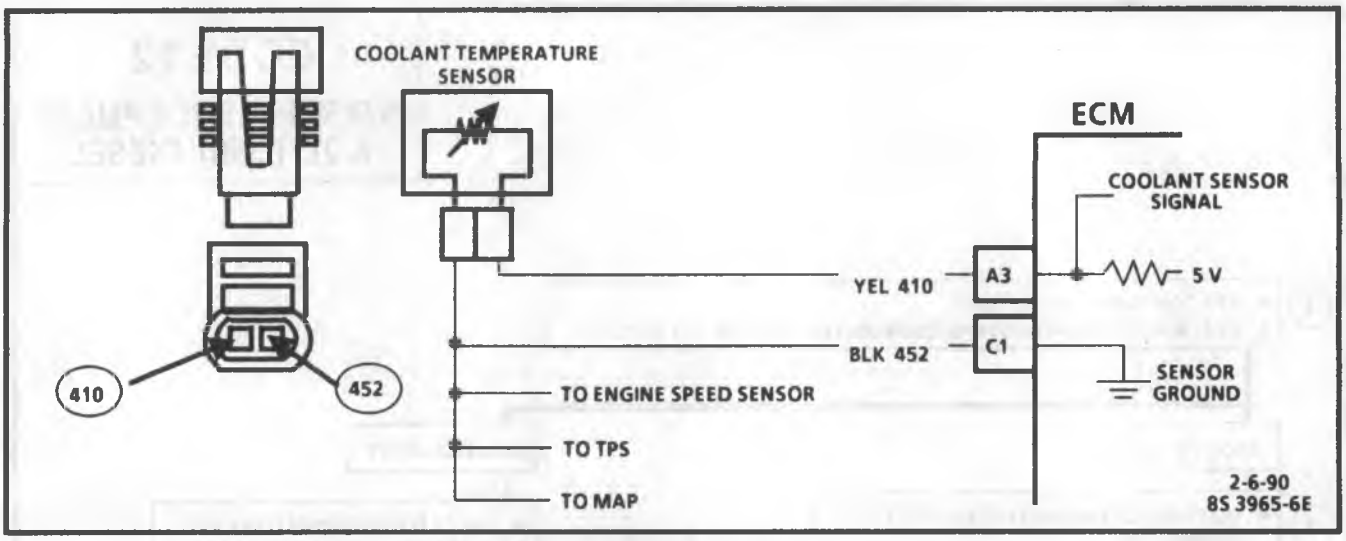

CODE 14

COOLANT TEMPERATURE SENSOR CIRCUIT
(SIGNAL VOLTAGE LOW)
6.2L (LH6) DIESEL

Circuit Description:

The coolant temperature sensor uses a thermistor to control the signal voltage to the ECM. The ECM applies a voltage on CKT 410 to the sensor. When the engine is cold, the sensor (thermistor) resistance is high, therefore, the ECM will see high signal voltage.

As the engine warms, the sensor resistance becomes less, and the voltage drops. At normal engine operating temperature (85°C to 95°C) the voltage will measure about 1.5 to 2.0 volts.

Test Description:

Number(s) below refer to the circled number(s) on the diagnostic chart.

1. Code 14 will set if:
   - Signal voltage indicates a coolant temperature above 135°C (275°F) for 3 minutes.
2. This test will determine if CKT 410 is shorted to ground, which will cause the conditions for Code 14.

Diagnostic Aids:

Check CKT 410 routing for a potential short to CKT 452 or ground.

"Scan" tool displays engine temperature in degrees centigrade. After engine is started, the temperature should rise steadily to about 90°C then stabilize, when thermostat opens.

The "Temperature to Resistance Value" scale, at the right, may be used to test the coolant sensor at various temperature levels to evaluate the possibility of a "slewed" (mis-scaled) sensor. A "slewed" sensor could result in poor driveability complaints.

"SCAN" STEP ONLY ■

CODE 14

COOLANT TEMPERATURE SENSOR CIRCUIT (SIGNAL VOLTAGE LOW) 6.2L (LH6) DIESEL

START NON-SCAN

ENGINE AT NORMAL OPERATING TEMPERATURE
- KEY "OFF," CLEAR CODES.
- DIAGNOSTIC TERMINAL NOT GROUNDED.
- START ENGINE AND RUN FOR 5 MINUTES OR UNTIL "SERVICE ENGINE SOON" LIGHT COMES "ON."
- KEY "ON," ENGINE STOPPED. GROUND DIAGNOSTIC TERMINAL AND NOTE CODE.

CODE 14

NO CODE 14 STORED. PROBLEM IS INTERMITTENT. SEE "DIAGNOSTIC AIDS" ON FACING PAGE.

START SCAN

(1)
- DISCONNECT COOLANT SENSOR.
- KEY "ON" ENGINE STOPPED.
- CHECK VOLTAGE BETWEEN HARNESS CONNECTOR TERMINALS, CKT 410 AND 452.

■ *IF COOLANT IS FIXED ABOVE 135°C DISCONNECT SENSOR*

BELOW 4 VOLTS

■ *ABOVE 135°C*

OVER 4 VOLTS

■ *BELOW -30°C*

REPLACE SENSOR

(2)
- KEY "OFF"
- DISCONNECT ECM CONNECTORS.
- CHECK SIGNAL CKT 410 FOR SHORT TO CKT 452 OR CHASSIS GROUND.

IF CKT 410 IS OK, IT IS A FAULTY ECM.

COOLANT SENSOR TEMPERATURE TO RESISTANCE VALUES (APPROXIMATE)

°F	°C	OHMS
210	100	185
160	70	450
100	38	1,800
70	20	3,400
40	4	7,500
20	-7	13,500
0	-18	25,000
-40	-40	100,700

CLEAR CODES AND CONFIRM NO "SERVICE ENGINE SOON" LIGHT.

2-6-90
8S 3966-6E

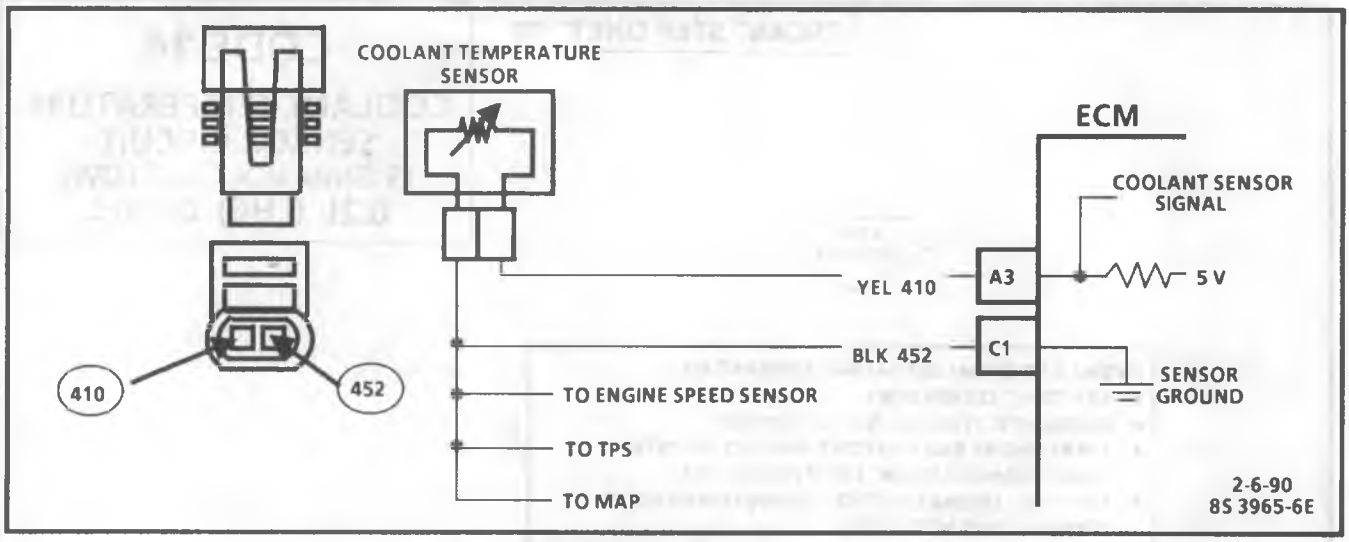

CODE 15

COOLANT TEMPERATURE SENSOR CIRCUIT
(SIGNAL VOLTAGE HIGH)
6.2L (LH6) DIESEL

Circuit Description:

The coolant temperature sensor uses a thermistor to control the signal voltage to the ECM. The ECM applies a voltage on CKT 410 to the sensor. When the engine is cold, the sensor (thermistor) resistance is high, therefore, the ECM will see high signal voltage.

As the engine warms, the sensor resistance becomes less, and the voltage drops. At normal engine operating temperature (85°C to 95°C), the voltage will measure about 1.5 to 2.0 volts.

Test Description: Number(s) below refer to the circled number(s) on the diagnostic chart.

1. Code 15 will set if:
   - Engine running longer than 5 minutes.
   - Coolant temp. less than -30°C (-22°F), for 5 minutes.
2. This test simulates a Code 14. If the ECM recognizes the low signal voltage, (high temperature), and the "Scan" reads 130°C or above, the ECM and wiring are OK.
3. This test will determine if CKT 410 is open. There should be 5 volts present at sensor connector, if measured with a DVOM.

Diagnostic Aids:

A "Scan" tool reads engine temperature in degrees centigrade. After engine is started the temperature should rise steadily to about 90°C then stabilize, when thermostat opens.

If Code 12 or 21 is also set, check CKT 452 for faulty wiring or connections. Check terminals at sensor for good contact.

The "Temperature to Resistance Value" scale at the right may be used to test the coolant sensor at various temperature levels to evaluate the possibility of a "slewed" (mis-scaled) sensor. A "slewed" sensor could result in poor driveability complaints.

CODE 15

COOLANT TEMPERATURE SENSOR CIRCUIT (SIGNAL VOLTAGE HIGH) 6.2L (LH6) DIESEL

"*SCAN*" STEP ONLY ■

START NON-SCAN

(1) ENGINE AT NORMAL OPERATING TEMPERATURE
- KEY "OFF," CLEAR CODES.
- DIAGNOSTIC TERMINAL NOT GROUNDED.
- START ENGINE AND RUN FOR 5 MINUTES. OR UNTIL "SERVICE ENGINE SOON" LIGHT COMES ON.
- KEY "ON," ENGINE STOPPED.
- GROUND DIAGNOSTIC TERMINAL AND NOTE CODE.

CODE 15

NO CODE 15. PROBLEM IS INTERMITTENT. SEE "DIAGNOSTIC AIDS" ON FACING PAGE.

(2)
- KEY "OFF," CLEAR CODES.
- DISCONNECT COOLANT SENSOR CONNECTOR
- JUMPER HARNESS TERMINALS TOGETHER.
- START ENGINE AND RUN FOR 5 MINUTES OR UNTIL "SERVICE ENGINE SOON" LIGHT COMES "ON."
- KEY "ON," ENGINE STOPPED.
- GROUND DIAGNOSTIC TERMINAL AND NOTE CODE.

START SCAN

■ IF COOLANT TEMP. IS FIXED BELOW -30°C
■ DISCONNECT SENSOR
JUMPER HARNESS TERMINALS TOGETHER

CODE 15
■ BELOW -30°C

CODE 14
■ ABOVE 135°C

FAULTY COOLANT SENSOR CONNECTION OR FAULTY SENSOR.

(3)
- KEY "ON," ENGINE STOPPED.
- PROBE COOLANT SENSOR HARNESS CKT 410 (YELLOW WIRE) WITH A VOLTMETER TO GROUND.
- SHOULD BE 4-6 VOLTS.

■ JUMPER CKT 410 TO CHASSIS GROUND

4-6 VOLTS
■ ABOVE 135°C

- KEY "OFF."
- DISCONNECT ECM C-D CONNECTOR.
- CHECK CKT 452 FOR OPEN CIRCUIT. IF CKT 452 IS NOT OPEN, IT IS A FAULTY ECM CONNECTION OR ECM.

BELOW 4 VOLTS
■ BELOW -30°C

- KEY "OFF."
- DISCONNECT ECM A-B CONNECTOR.
- CHECK CKT 410 FOR OPEN OR SHORT TO GROUND. IF CKT 410 IS NOT OPEN OR SHORTED TO GROUND, IT IS A FAULTY ECM CONNECTION OR ECM.

COOLANT SENSOR
TEMPERATURE TO RESISTANCE VALUES (APPROXIMATE)

°F	°C	OHMS
210	100	185
160	70	450
100	38	1,800
70	20	3,400
40	4	7,500
20	-7	13,500
0	-18	25,000
-40	-40	100,700

CLEAR CODES AND CONFIRM NO "SERVICE ENGINE SOON" LIGHT.

2-6-90
8S 3968-6E

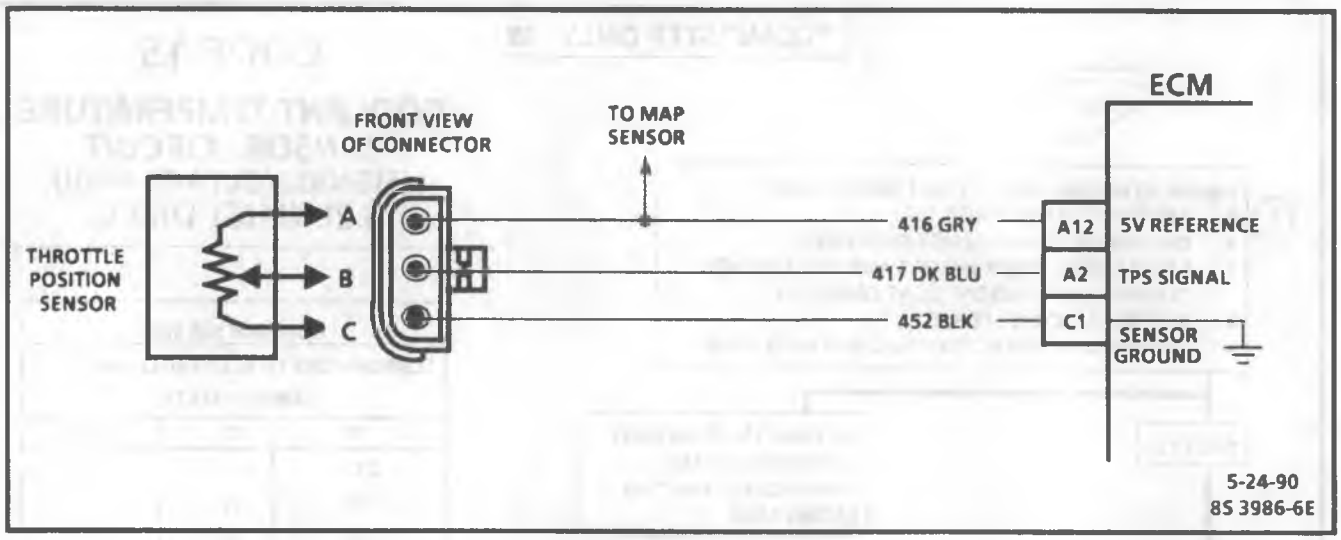

CODE 21

THROTTLE POSITION SENSOR (TPS) CIRCUIT
(SIGNAL VOLTAGE HIGH)
6.2L (LH6) DIESEL

Circuit Description:

The Throttle Position Sensor (TPS) provides a voltage signal that changes relative to the throttle opening. Signal voltage will vary from about .5 volt (0%) at idle to about 5 volts (100%) at wide open throttle.

Code 21 means that the ECM has seen the following:

- High voltage at ECM terminal "A2".
- For a time in excess of 2 minutes.
- Engine speed less than 1120 rpm.

Test Description: Number(s) below refer to the circled number(s) on the diagnostic chart.

1. Confirms Code 21 and that fault is present.
2. Checks for 5 volt reference at TPS harness connector and separates an electrical circuit problem from a faulty TPS. If the circuit is OK, normal voltage reading will be about 5 volts.
3. Check to see if low reference voltage is due to an open wire or the ECM.

CODE 21

THROTTLE POSITION SENSOR (TPS) CIRCUIT
(SIGNAL VOLTAGE HIGH)
6.2L (LH6) DIESEL

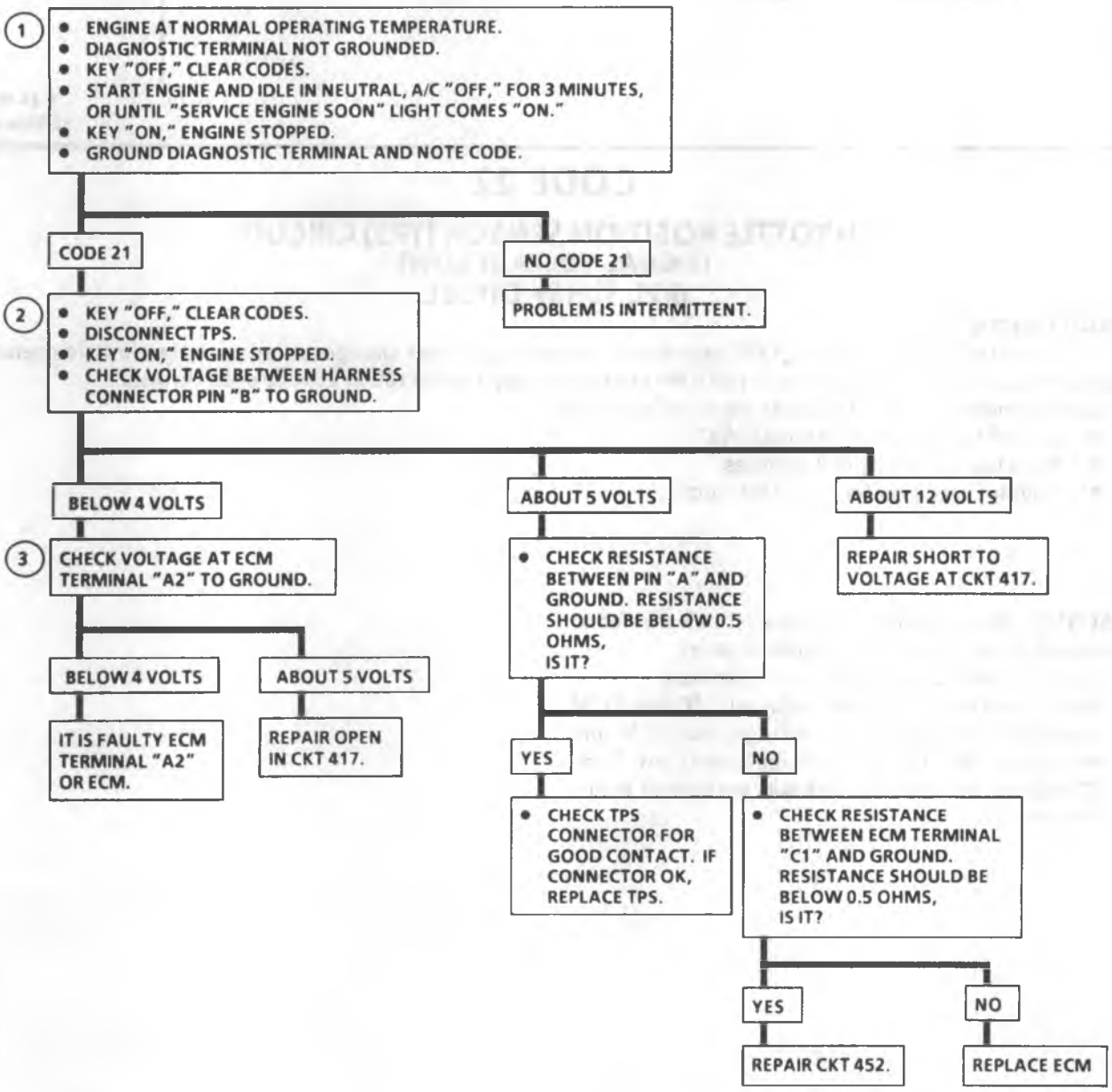

CLEAR CODES AND CONFIRM NO "SES" LIGHT, WITH ENGINE RUNNING.

2-7-90
8S 3987-6E

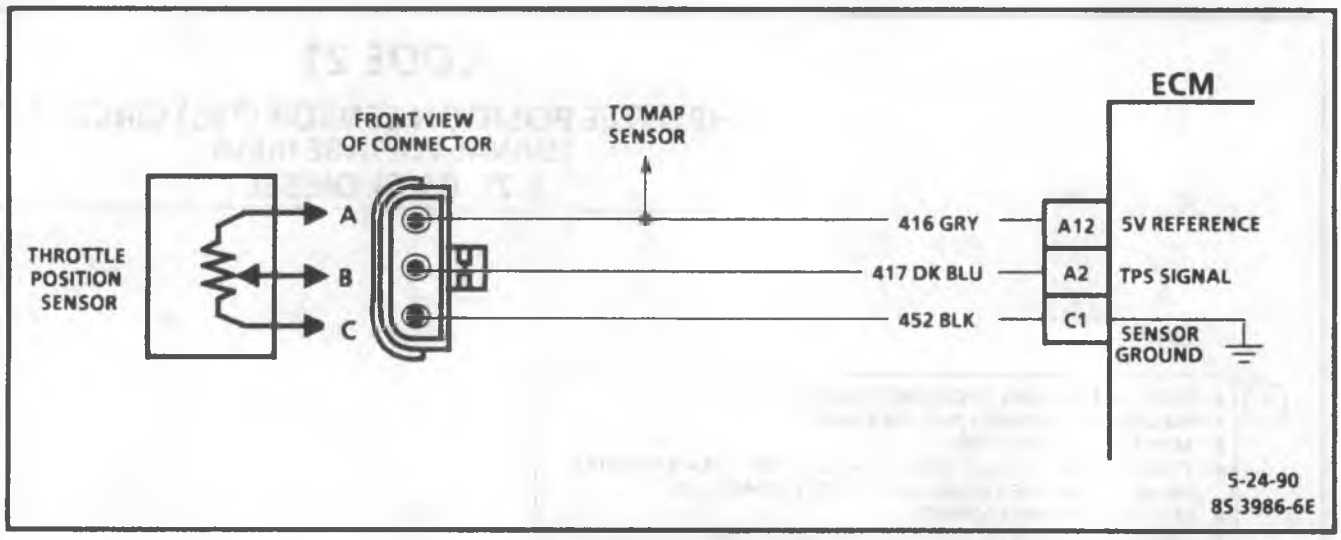

CODE 22

THROTTLE POSITION SENSOR (TPS) CIRCUIT (SIGNAL VOLTAGE LOW) 6.2L (LH6) DIESEL

Circuit Description:

The Throttle Position Sensor (TPS) provides a voltage signal that changes relative to the throttle opening. Signal voltage will vary from about .5 volt (0%) at idle to about 5 volts (100%) at wide open throttle.

Code 22 means that the ECM has seen the following:

- Low voltage at ECM terminal "A2".
- For a time in excess of 2 minutes.
- Engine speed greater than 1250 rpm.

Test Step Description: Number(s) below refer to the circled number(s) on the diagnostic chart.

1. Confirms Code 22 and that fault is present.
2. Simulates Code 21, (high voltage). If the ECM recognizes the high signal voltage, the ECM and wiring are OK. If signal voltage is still low, Code 23 will set, because the test was performed below 1250 rpm.

CODE 22

THROTTLE POSITION SENSOR (TPS) CIRCUIT (SIGNAL VOLTAGE LOW) 6.2L (LH6) DIESEL

1
- DIAGNOSTIC TERMINAL NOT GROUNDED.
- KEY "OFF".
- CLEAR CODES.
- START ENGINE AND OPERATE ABOVE 1250 RPM IN NEUTRAL, A/C OFF, FOR 2 MINUTES, OR UNTIL "SERVICE ENGINE SOON" LIGHT COMES "ON".
- KEY "ON", ENGINE STOPPED.
- GROUND DIAGNOSTIC TERMINAL AND NOTE CODE.

CODE 22

NO CODE 22

PROBLEM IS INTERMITTENT.

2
- DIAGNOSTIC TERMINAL NOT GROUNDED.
- KEY "OFF", CLEAR CODES.
- DISCONNECT TPS AND JUMPER CKT 416 TO 417.
- START ENGINE AND IDLE IN NEUTRAL, A/C OFF, FOR 2 MINUTES, OR UNTIL "SERVICE ENGINE SOON" LIGHT COMES ON.
- KEY "ON" , ENGINE STOPPED.
- GROUND DIAGNOSTIC TERMINAL AND NOTE CODE.

CODE 23

CODE 21

- REMOVE JUMPER FROM 416 AND 417.
- CHECK VOLTAGE BETWEEN CKT 452 AND 416 USING DIGITAL VOLTMETER (J-29125).

CHECK TPS ADJUSTMENT

OK

REPLACE TPS

4-6 VOLTS

BELOW 4 VOLTS

DISCONNECT ECM CONNECTOR AND CHECK FOR OPEN OR SHORT TO GROUND IN CKT 417. IF CKT 417 OK, IT IS FAULTY ECM CONNECTOR TERMINAL OR ECM.

DISCONNECT ECM CONNECTOR. CHECK FOR OPEN OR SHORT TO GROUND IN CKT 416. IF CKT 416 OK, CHECK FOR OPEN IN CKT 452. IF CKT 452 OK, IT IS FAULTY ECM CONNECTOR TERMINAL OR ECM.

6-22-90
8S 3988-6E

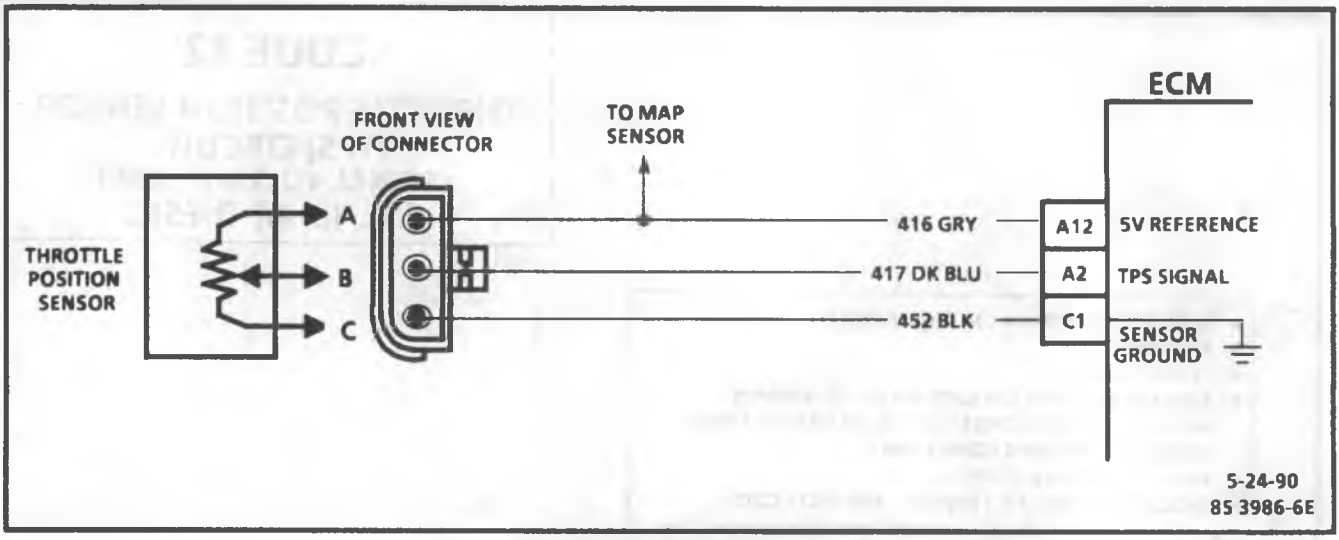

CODE 23

THROTTLE POSITION SENSOR (TPS) CIRCUIT
(SENSOR MISADJUSTED)
6.2L (LH6) DIESEL

Circuit Description:

The Throttle Position Sensor (TPS) provides a voltage signal that changes relative to the throttle opening. Signal voltage will vary from about .5 volt (0%) at idle to about 5 volts (100%) at wide open throttle.

Code 23 means that the ECM has seen the following:

- Voltage not between .25 and 1.35 volts at ECM terminal "A2".
- For a time in excess of 30 seconds.
- Engine speed between 550 and 650 rpm.

Test Description:

Number(s) below refer to circled number(s) on the diagnostic chart.

1. Confirms Code 23 and that fault is present.
2. Will determine if sensor signal line is shorted to ground.
3. The procedure for adjusting the throttle position sensor is listed in the "Throttle Position Sensor On-Vehicle Service" portion of this service manual section.

Diagnostic Aids:

- Disregard a Code 23, if "Service Engine Soon" light goes out as soon as the throttle is returned to idle.

CODE 23

THROTTLE POSITION SENSOR (TPS) CIRCUIT
(SENSOR MISADJUSTED)
6.2L (LH6) DIESEL

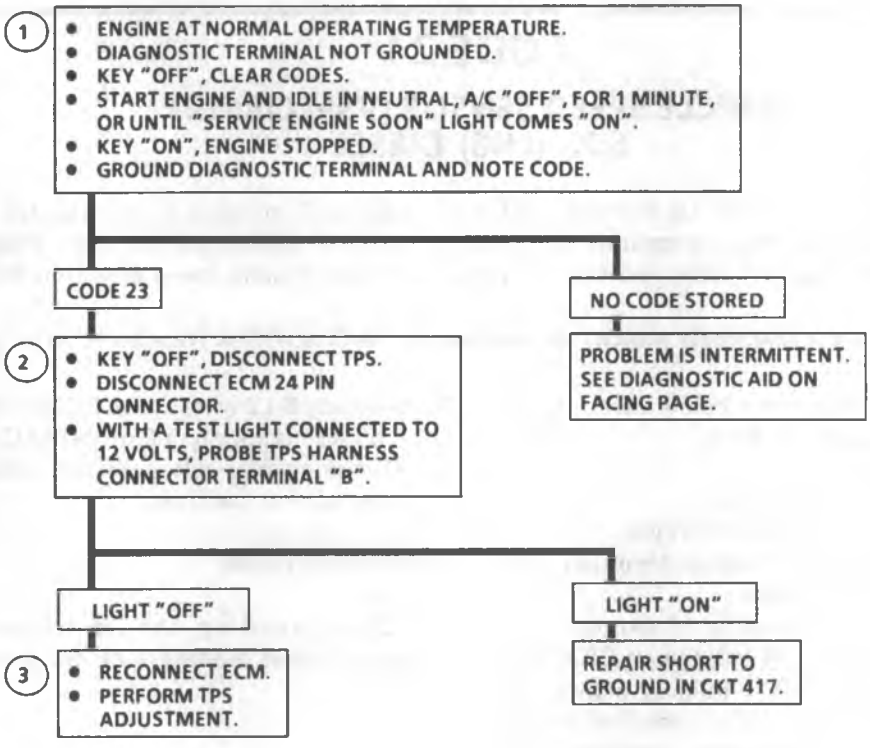

CLEAR CODES AND CONFIRM NO "SES" LIGHT, WITH ENGINE RUNNING.

2-7-90
* 8S 3989-6E

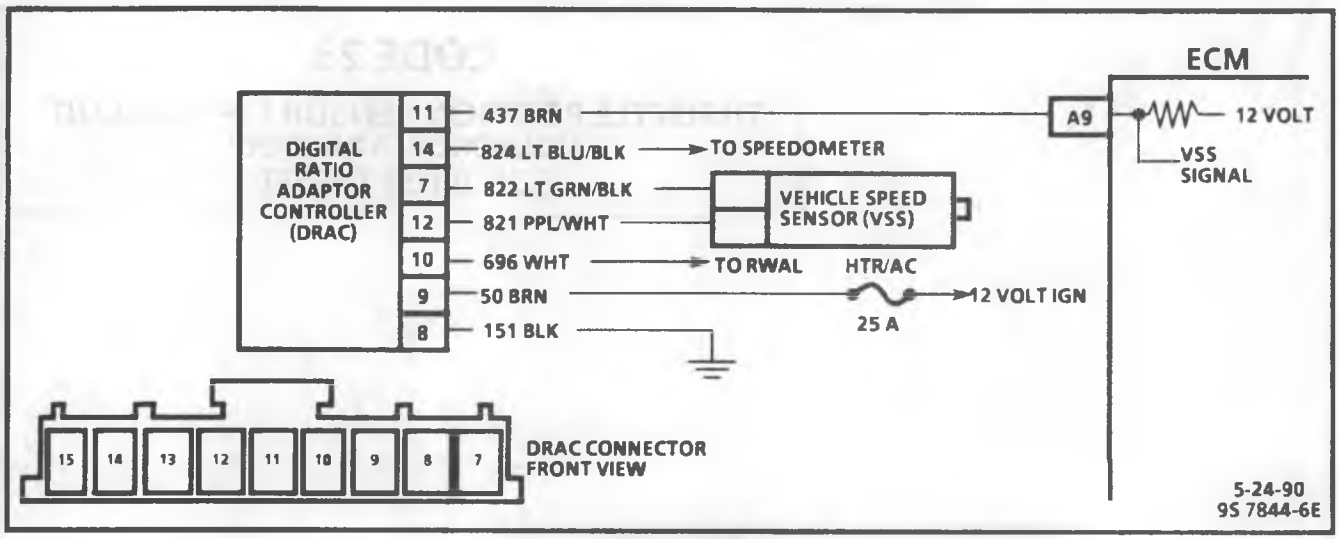

CODE 24

VEHICLE SPEED SENSOR (VSS) CIRCUIT 6.2L (LH6) DIESEL

Circuit Description:

The ECM applies and monitors 12 volts on CKT 437. CKT 437 connects to the Digital Ratio Adapter Controller (DRAC), which alternately grounds CKT 437 when drive wheels are turning. This pulsing action takes place about 2000 times per mile and the ECM will calculate vehicle speed based on the time between "pulses."

A "Scan" tool reading should closely match the speedometer reading with drive wheels turning.

Test Description:

Number(s) below refer to the circled number(s) on diagnostic chart.

Code 24 will set if:

- CKT 437 voltage is constant.
- Engine speed is more than 2000 rpm.
- Vehicle speed signal (voltage on terminal "A9" is less than 5 mph (8 km/h).
- All conditions must be met for 10 seconds.

1. This test monitors the ECM voltage on CKT 437. With the wheels turning, the pulsing action will result in a varying voltage. The variation will be greater at low wheel speeds to an average of 4-6 volts at about 20 mph (32 km/h).
2. A voltage of less than 1 volt at the ECM connector indicates that the CKT 437 wire is shorted to ground. Disconnect CKT 437 at the DRAC. If voltage now reads above 10 volts, the DRAC is faulty. If voltage remains less than 10 volt, then CKT 437 wire is grounded. If 437 is not grounded, check for a faulty ECM connector or ECM.
3. A steady 8-12 volts at the ECM connector indicates CKT 437 is open or a faulty DRAC.
4. This is normal voltage which indicates a possible intermittent condition.

Diagnostic Aids:

- "Scan" reading should closely match with speedometer reading, with drive wheels turning.

"*SCAN*" STEP ONLY ■

CODE 24

VEHICLE SPEED SENSOR (VSS) CIRCUIT 6.2L (LH6) DIESEL

START NON-SCAN

START SCAN

- CODE 24 COULD BE SET ON 4WD WHEN THE TRANSFER CASE IS IN NEUTRAL AND RUNNING A LOAD WITH THE PTO PAD.
- DISREGARD CODE 24 IF SET WHEN DRIVE WHEELS ARE NOT TURNING.
- SPEEDOMETER WORKING OK.
- CRUISE CONTROL "OFF."
- LIFT DRIVE WHEELS, IDLE ENGINE IN DRIVE (A.T.) OR FIRST GEAR (M.T.).

■ **"SCAN" MPH WITH DRIVE WHEELS TURNING.**

■ **0 MPH**

■ **READS MPH**

(1) BACK PROBE ECM CONNECTOR, CKT 437, WITH VOLTMETER TO GROUND AND DRIVE WHEELS STILL TURNING.

(2) LESS THAN 1 VOLT

DISCONNECT CONNECTOR AT DRAC. RECHECK VOLTAGE AT ECM.

LESS THAN 1 VOLT

DISCONNECT A-B ECM CONNECTOR. WITH A TEST LIGHT TO 12 VOLTS, PROBE CKT 437.

LIGHT "ON"

CHECK CKT 437 FOR SHORT TO GROUND, INCLUDING WIRE TO CRUISE CONTROL.

LIGHT "OFF"

ECM CONNECTIONS OR ECM.

8 TO 12 VOLTS

FAULTY DRAC

(3) 8 TO 12 VOLTS, NOT VARYING

- CHECK CONNECTIONS AT DRAC.
- CHECK FOR OPEN CKT 437.
- CHECK FOR 12V. AND GROUND AT DRAC.
- FAULTY DRAC.

(4) 1 TO 6 VOLTS AND VARYING

CHECK:
- TPS ADJUSTMENT.
- IF ADJUSTMENT IS OK, CODE 24 IS INTERMITTENT.

CLEAR CODES AND CONFIRM NO "SERVICE ENGINE SOON" LIGHT.

5-7-90
MS 9789-6E

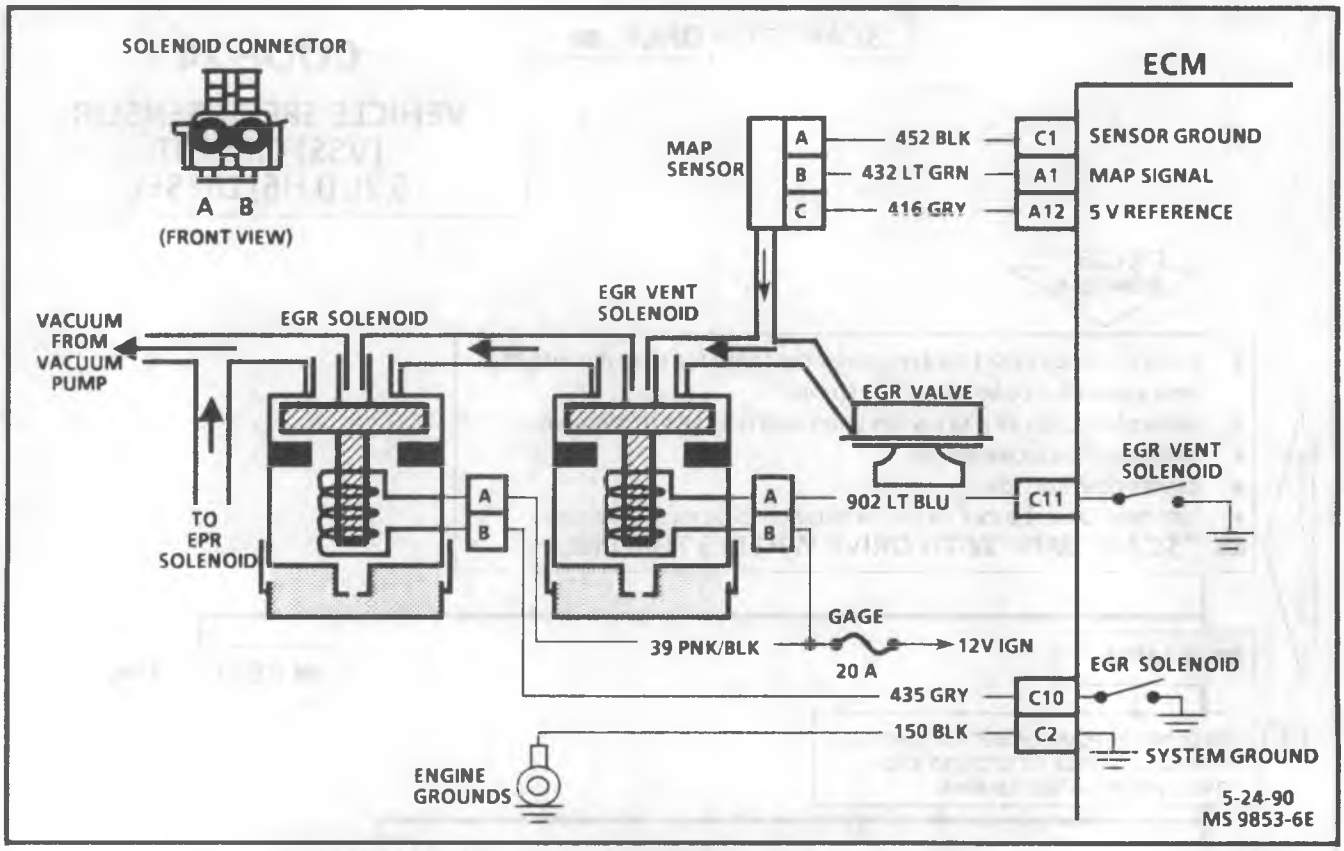

CODE 31

MAP SENSOR CIRCUIT
(SIGNAL VOLTAGE LOW)
6.2L (LH6) DIESEL

Circuit Description:

A Manifold Absolute Pressure (MAP) sensor is used to monitor the amount of vacuum in the EGR circuit. It senses the actual vacuum in the EGR vacuum line and sends a signal back to the ECM. The signal is compared to the EGR duty cycle calculated by the ECM. If there is a difference in the ECM command and what is at the EGR valve sensed by the MAP, the ECM makes minor adjustments to correct. When a major difference is sensed, the ECM recognizes a fault and sends a full EGR signal.

Test Description: Number(s) below refer to circled number(s) on the diagnostic chart.

1. Confirms Code 31 and that fault is present.
2. If the ECM recognizes and sets Code 33, high MAP signal, the ECM, MAP Sensor and wiring are OK.
3. If the ECM recognizes and sets Code 33, high MAP signal, the ECM and wiring are OK.
4. Checks for 5 volt reference signal to MAP sensor. Normally, about 5 volts should be present, with the key "ON" at terminal "C".
5. Checks for an open in the EGR solenoid circuit.

CODE 31

MAP SENSOR CIRCUIT (SIGNAL VOLTAGE LOW) 6.2L (LH6) DIESEL

"SCAN" STEP ONLY ■

START NON-SCAN

(1)
- KEY "OFF," CLEAR CODES.
- DIAGNOSTIC TERMINAL NOT GROUNDED.
- START ENGINE AND RUN FOR 1 MINUTE OR UNTIL "SERVICE ENGINE SOON" LIGHT COMES "ON."
- KEY "ON," ENGINE STOPPED.
- GROUND DIAGNOSTIC TERMINAL AND NOTE CODE.

CODE 31

- NO CODE 31. PROBLEM IS INTERMITTENT.
- CHECK CONNECTION AT MAP SENSOR

START SCAN

(2)
- KEY "OFF," CLEAR CODES.
- DISCONNECT MAP SENSOR VACUUM LINE.
- DIAGNOSTIC TERMINAL NOT GROUNDED.
- START ENGINE AND RUN FOR 1 MINUTE OR UNTIL "SERVICE ENGINE SOON" LIGHT COMES "ON."
- KEY "ON," ENGINE STOPPED.
- GROUND DIAGNOSTIC TERMINAL AND NOTE CODE.

■ IF MAP VOLTAGE IS .2 VOLTS (200 mV) OR BELOW WITH ENGINE RUNNING, DISCONNECT SENSOR VACUUM LINE.

CODE 31
■ .2 VOLTS (200 mV) OR BELOW

(3)
- KEY "OFF," CLEAR CODES.
- DISCONNECT MAP SENSOR AND JUMPER HARNESS CONNECTOR TERMINAL "B" TO "C".
- DIAGNOSTIC TERMINAL NOT GROUNDED.
- START ENGINE AND RUN FOR 1 MINUTE OR UNTIL "SERVICE ENGINE SOON" LIGHT COMES "ON."
- KEY "ON," ENGINE STOPPED.
- GROUND DIAGNOSTIC TERMINAL AND NOTE CODE.

■ DISCONNECT SENSOR AND JUMPER HARNESS TERMINAL "B" TO "C"

CODE 31
■ .2 VOLTS (200 mV) OR BELOW

(4)
- REMOVE JUMPER FROM TERMINAL "B" TO "C".
- CHECK VOLTAGE BETWEEN HARNESS CONNECTOR TERMINAL "A" AND "C" USING VOLTMETER.

4 TO 6 VOLTS

CHECK FOR OPEN OR SHORT TO GROUND IN CKT 432.

CKT 432 OK, FAULTY ECM CONNECTOR TERMINAL OR ECM.

BELOW 4 VOLTS

CHECK FOR OPEN OR SHORT TO GROUND IN CKT 416.

CKT 416 OK, FAULTY ECM CONNECTOR TERMINAL OR ECM.

CODE 33
■ ABOVE .2 VOLTS (200 mV)

REPLACE SENSOR

CODE 33
■ ABOVE .2 VOLTS (200 mV)

(5)
- KEY "ON," ENGINE NOT RUNNING.
- DISCONNECT EGR SOLENOID CONNECTOR.
- INSTALL A TEST LIGHT ACROSS HARNESS CONNECTOR AND NOTE LIGHT.

LIGHT "OFF"

- CONNECT TEST LIGHT FROM TERM. "A" TO GROUND.
- NOTE LIGHT

LIGHT "ON"

- CHECK FOR POOR SOLENOID CONNECTOR TERMS.
- IF GOOD CONTACTS, REPLACE SOLENOID ASSEMBLY.

LIGHT "ON"

- CHECK FOR OPEN IN CKT 435.
- CKT 435 OK, FAULTY ECM CONNECTOR OR FAULTY ECM.

LIGHT "OFF"

- CHECK FOR OPEN IN CKT 39.

5-3-90
MS 9702-6E

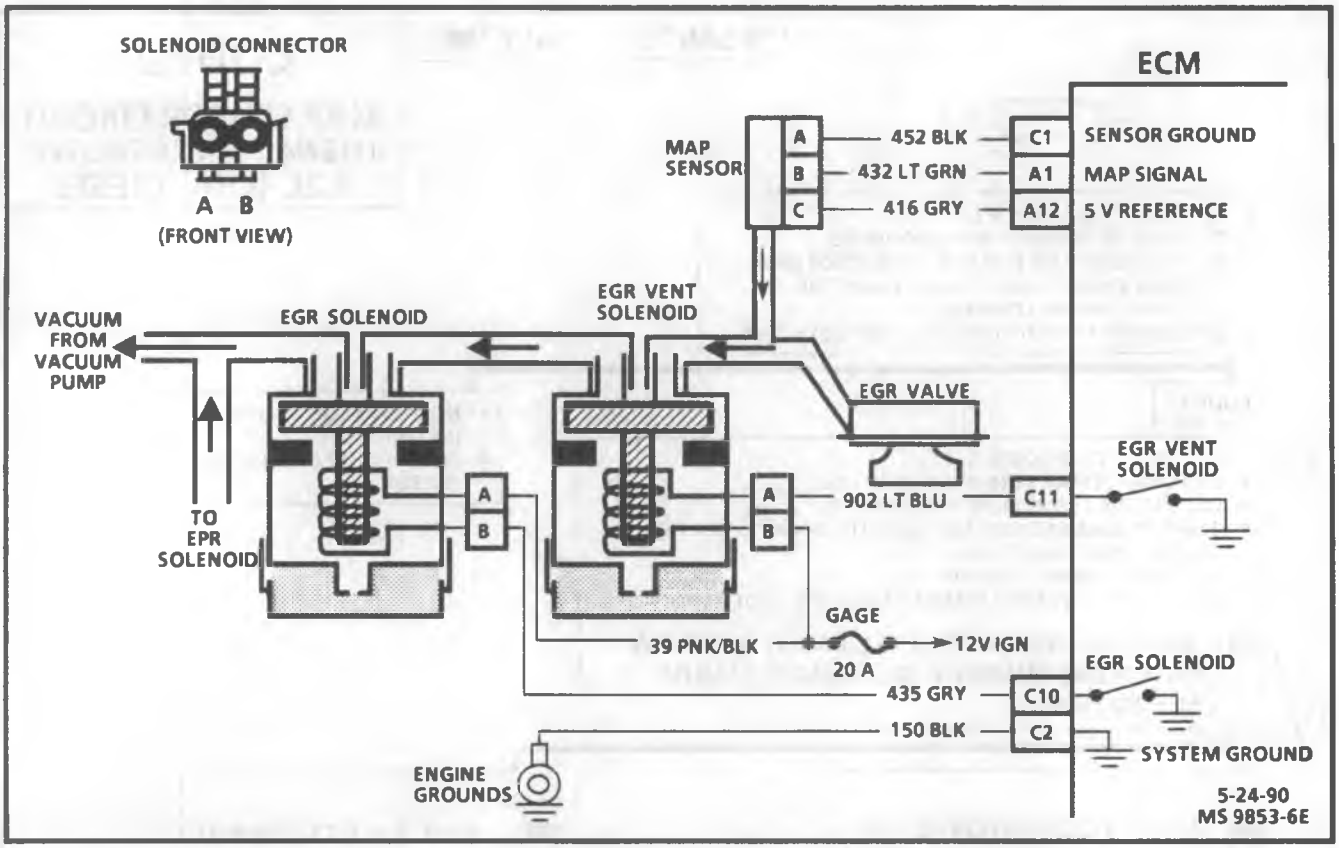

CODE 32

EGR CIRCUIT LOOP ERROR
6.2L (LH6) DIESEL

Circuit Description:

During normal operation, the ECM compares its EGR duty cycle signal with the MAP absolute pressure signal and makes corrections in the duty cycle accordingly. If the actual EGR control pressure (line vacuum) varies from what the ECM has previously determined the pressure should be, and this variance continues for 10 seconds or more, a Code 32 will set and the ECM will shut down the EGR.

Test Description:

Number(s) below refer to circled number(s) on the diagnostic chart.

1. Checks to determine if Code 32 can reset.
2. Checks EGR solenoid electrical control circuit. The test light should "flicker faintly," if the ECM harness and connections are OK. "Flicker faintly" refers to a slightly pulsing glow as opposed to a "bright steady" glow from a continuous ground path.

Diagnostic Aids:

A vacuum leak may cause a Code 32. Check all vacuum hoses and components connected to the hoses for leaks. This check includes cruise control and air conditioning, if installed.

CODE 32

EGR CIRCUIT LOOP ERROR 6.2L (LH6) DIESEL

(1)
- KEY "OFF," CLEAR CODES.
- DIAGNOSTIC TERMINAL NOT GROUNDED.
- START ENGINE AND RUN FOR 30 SECONDS, OR UNTIL "SERVICE ENGINE SOON" LIGHT COMES "ON."
- GROUND DIAGNOSTIC TERMINAL AND NOTE CODE.

CODE 32 → (2)

NO CODE 32 → CODE 32 IS INTERMITTENT. IF NO ADDITIONAL CODES WERE STORED, SEE "DIAGNOSTIC AIDS" ON FACING PAGE.

(2)
- DISCONNECT EGR SOLENOID CONNECTOR.
- KEY "ON," ENGINE "OFF."
- GROUND DIAGNOSTIC TERMINAL.
- CONNECT TEST LIGHT BETWEEN EGR SOLENOID CONNECTOR TERMINALS. TEST LIGHT SHOULD FLICKER FAINTLY. DOES IT?

YES →
- CHECK EGR SOLENOID FOR OPEN WINDING. IS IT OPEN?

NO → REPAIR OPEN IN CKT 39 OR 435.

NO →
- RECONNECT EGR SOLENOID CONNECTOR.
- KEY "OFF." CLEAR CODES.
- REMOVE EGR VENT FILTER.
- DIAGNOSTIC TERMINAL NOT GROUNDED.
- START ENGINE AND RUN FOR 30 SECONDS OR UNTIL "SERVICE ENGINE SOON" LIGHT COMES ON.
- GROUND DIAGNOSTIC TERMINAL AND NOTE CODE.

YES → REPLACE EGR/EPR SOLENOID ASSEMBLY.

CODE 32 →
- KEY "ON," ENGINE "OFF."
- REMOVE HOSES FROM EGR SOLENOID.
- USING A VACUUM PUMP, APPLY VACUUM TO THE VACUUM SOURCE SIDE OF THE EGR SOLENOID. THE SOLENOID SHOULD HOLD VACUUM, DOES IT?

NO CODE 32 → REPLACE EGR VENT FILTER

YES →
- DISCONNECT EGR SOLENOID CONNECTOR. THE VACUUM SHOULD DROP OFF, DOES IT?

NO → REPLACE EGR/EPR SOLENOID ASSEMBLY.

YES → ELECTRICAL CIRCUITS ARE OK SEE "DIAGNOSTIC AIDS" ON FACING PAGE.

NO → REPLACE EGR/EPR SOLENOID ASSEMBLY.

5-3-90
MS 9703-6E

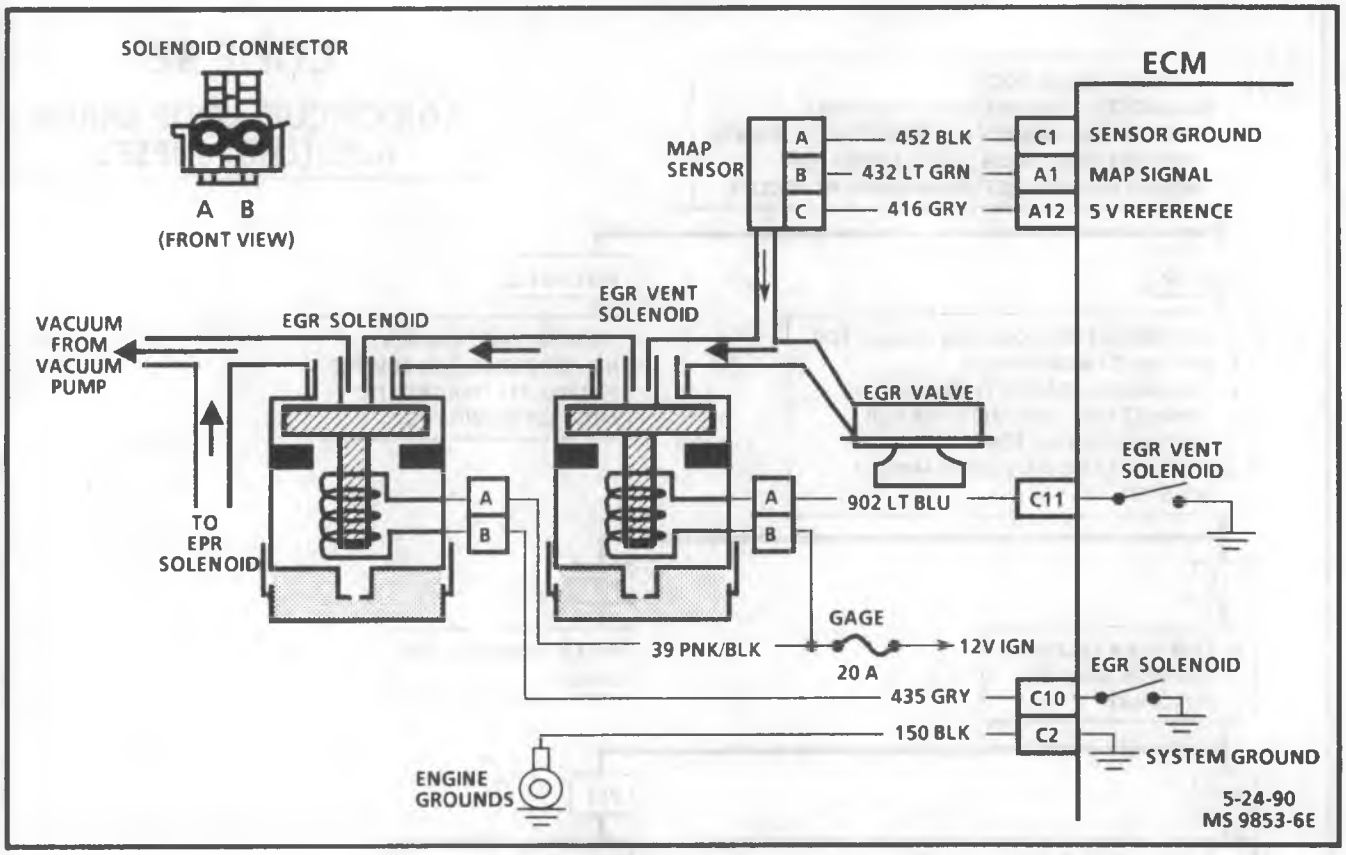

CODE 33

MAP SENSOR CIRCUIT
(SIGNAL VOLTAGE HIGH)
6.2L (LH6) DIESEL

Circuit Description:

A Manifold Absolute Pressure (MAP) sensor is used to monitor the amount of vacuum in the EGR circuit. It senses the actual vacuum in the EGR vacuum line and sends a signal back to the ECM. The signal is compared to the EGR duty cycle calculated by the ECM. If there is a difference in the ECM command and what is at the EGR valve sensed by the MAP, the ECM makes minor adjustments to correct. When a major difference is sensed, the ECM recognizes a fault and sends a maximum EGR signal.

Test Description: Number(s) below refer to circled number(s) on the diagnostic chart.

1. Confirms Code 33 and that fault is present.
2. If the ECM recognizes and sets Code 33, low MAP signal, the ECM and wiring are OK.
3. Checks to determine if solenoids are stuck closed.
4. Checks to determine if there is a short to ground in either solenoid circuit, or if there is a fault in the ECM.

CODE 33

MAP SENSOR CIRCUIT (SIGNAL VOLTAGE HIGH) 6.2L (LH6) DIESEL

"SCAN" STEP ONLY ■

CHECK FOR POOR CONNECTION, PLUGGED, DISCONNECTED, OR LEAKING MAP SENSOR VACUUM HOSE. REPAIR AS REQUIRED.

START NON-SCAN

(1)
- KEY "OFF", CLEAR CODES.
- DIAGNOSTIC TERMINAL NOT GROUNDED.
- START ENGINE AND RUN FOR 1 MINUTE OR UNTIL "SERVICE ENGINE SOON" LIGHT COMES ON.
- KEY "ON", ENGINE STOPPED. GROUND DIAGNOSTIC TERMINAL AND NOTE CODE.

CODE 33

NO CODE 33. PROBLEM IS INTERMITTENT. CHECK FOR POOR CONNECTION AT MAP SENSOR.

START SCAN

(2)
- KEY "OFF", CLEAR CODES.
- DISCONNECT MAP SENSOR ELECTRICAL CONNECTOR.
- DIAGNOSTIC TERMINAL NOT GROUNDED.
- START ENGINE AND RUN FOR 1 MINUTE OR UNTIL "SERVICE ENGINE SOON" LIGHT COMES ON.
- KEY "ON", ENGINE STOPPED.
- GROUND DIAGNOSTIC TERMINAL AND NOTE CODE.

■ IF MAP VOLTAGE IS ABOVE 2.5 VOLTS WITH ENGINE RUNNING, DISCONNECT SENSOR.

CODE 31
■ BELOW 2.5 VOLTS

CODE 33
■ 2.5 VOLTS OR OVER

CHECK FOR SHORT TO VOLTAGE IN CKT 432. IF CKT 432 IS OK, REPLACE ECM.

(3)
- DISCONNECT EGR SOLENOID CONNECTOR AND EGR VENT SOLENOID CONNECTOR.
- INSTALL VACUUM GAGE IN PLACE OF EGR VALVE.
- START ENGINE AND NOTE VACUUM.

VACUUM

NO VACUUM

- CHECK FOR POOR OR LOW VACUUM SOURCE.
- EGR SOLENOID VALVE OR EGR VENT SOLENOID VALVE CLOSED.
- REPLACE SOLENOID IF REQUIRED.

(4)
- CONNECT 12 V TEST LIGHT ACROSS EGR SOLENOID TERMINALS "A" AND "B", THEN EGR VENT SOLENOID TERMINALS "A" AND "B".

LIGHT "ON" EITHER SOLENOID

CHECK FOR SHORT TO GROUND IN CKT 435, OR SHORT TO GROUND IN CKT 902. IF OK, REPLACE ECM.

LIGHT "OFF" BOTH SOLENOIDS

CHECK FOR OPEN IN GROUND CKT 452. IF CKT 452 IS OK, REPLACE SENSOR.

CLEAR CODES AND CONFIRM NO "SERVICE ENGINE SOON" LIGHT WITH ENGINE RUNNING.

* 8S 3984-6E
2-7-90

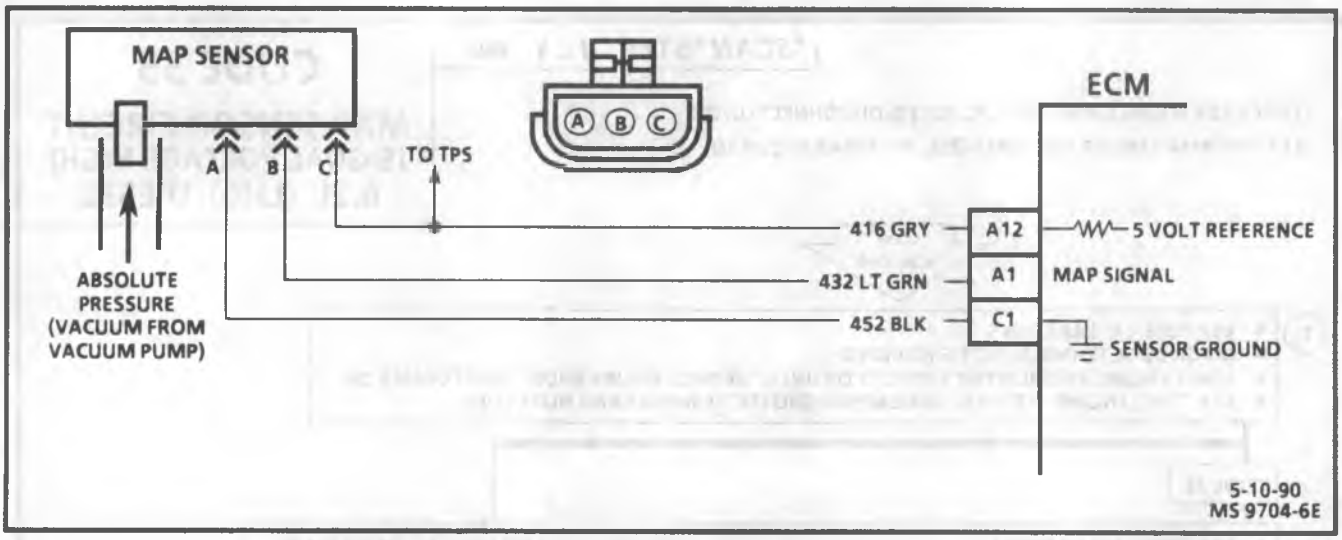

CODE 53

VOLTAGE REFERENCE OVERLOAD
6.2L (LH6) DIESEL

Test Description: Number(s) below refer to circled number(s) on the diagnostic chart.

1. Checks to confirm that a code is still present.
2. Checks to determine if there is a 5 volt reference from the ECM.
3. Checks to determine if there is a short to ground in CKT A12, or a short to ground in the ECM.

CODE 51
PROM PROBLEM
6.2L (LH6) DIESEL

- CHECK THAT ALL PINS ARE FULLY INSERTED IN THE SOCKET.
- IF OK, REPLACE PROM AND RECHECK.
- IF PROBLEM NOT CORRECTED, REPLACE ECM.

CODE 52
ECM FAULT
6.2L (LH6) DIESEL

- CHECK THAT ECM CONNECTORS ARE FULLY INSERTED.
- CLEAR MEMORY.
- START ENGINE AND CHECK FOR "SERVICE ENGINE SOON" LIGHT.
- IF LIGHT REAPPEARS, AND CODE 52, REPLACE ECM.

CODE 53
VOLTAGE REFERENCE OVERLOAD
6.2L (LH6) DIESEL

1
- KEY "OFF," CLEAR CODES.
- START ENGINE AND RUN FOR 1 MINUTE, OR UNTIL "SES" COMES ON.
- GROUND DIAGNOSTIC TERMINAL AND NOTE CODE.

CODE 53

NO CODE 53

CODE 53 IS INTERMITTENT. IF ANY OTHER CODES ARE NOTED, SEE APPLICABLE CHART.

2
- DIAGNOSTIC TERMINAL NOT GROUNDED.
- KEY "ON" AND ENGINE NOT RUNNING.
- DISCONNECT MAP SENSOR AND CHECK VOLTAGE BETWEEN HARNESS CONNECTOR PIN "C" AND GROUND, USING DVM.

BELOW 4 VOLTS

ABOVE 4 VOLTS

REPLACE MAP SENSOR.

3
- DISCONNECT ECM 24 PIN CONNECTOR ONLY. CHECK FOR VOLTAGE AT ECM TERMINAL A12 TO GROUND, USING A DVM.

ABOUT 5 VOLTS

REPAIR SHORT TO GROUND IN CKT A12.

BELOW 4 VOLTS

REPLACE ECM.

2-7-90
8S 3994-6E

ON-VEHICLE SERVICE

WIRE HARNESS

The ECM harness electrically connects the ECM to the EGR system, TCC system, and Cold Advance and Glow Plug system in the vehicle engine and passenger compartment.

Wire harnesses should be replaced with proper part number harnesses. When signal wires are spliced into a harness, use wire with high temperature insulation only.

With the low current and voltage levels found in the system, it is important that the best possible bond at all wire splices be made by soldering the splices, as shown in Figure 6E2-14.

Molded on connectors require complete replacement of the connector. This means splicing a new connector assembly into the harness.

Refer to Figures 6E2-17 and 6E2-18, for wiring diagrams.

Replacement connectors and terminals are listed in Group 8.965 of the Standard Parts Catalog.

CONNECTORS AND TERMINALS

Use care, when probing a connector or replacing terminals in them. It is possible to short between opposite terminals. If this happens to the wrong terminal pair, it is possible to damage certain components. Always use jumper wires between connectors for circuit checking. NEVER probe through the Weather-Pack seals. Use tachometer adapter J 35812, or equivalent, which provides an easy hook up of the tachometer lead. The connector test adapter kit J 35616, or equivalent, contains an assortment of flexible connectors used to probe terminals during diagnosis. Fuse remover and test tool BT-8616, or equivalent, is used for removing a fuse and to adapt fuse holder, with a DVM meter, for diagnosis.

When diagnosing, open circuits are often difficult to locate by sight, because oxidation or terminal misalignment are hidden by the connectors. Merely wiggling a connector on a sensor, or in the wiring harness, may correct the open circuit condition. This should always be considered when an open circuit or failed sensor is indicated. Intermittent problems may also be caused by oxidized or loose connections.

Before making a connector repair, be certain of the type of connector. Weather-Pack and Compact Three connectors look similar, but are serviced differently.

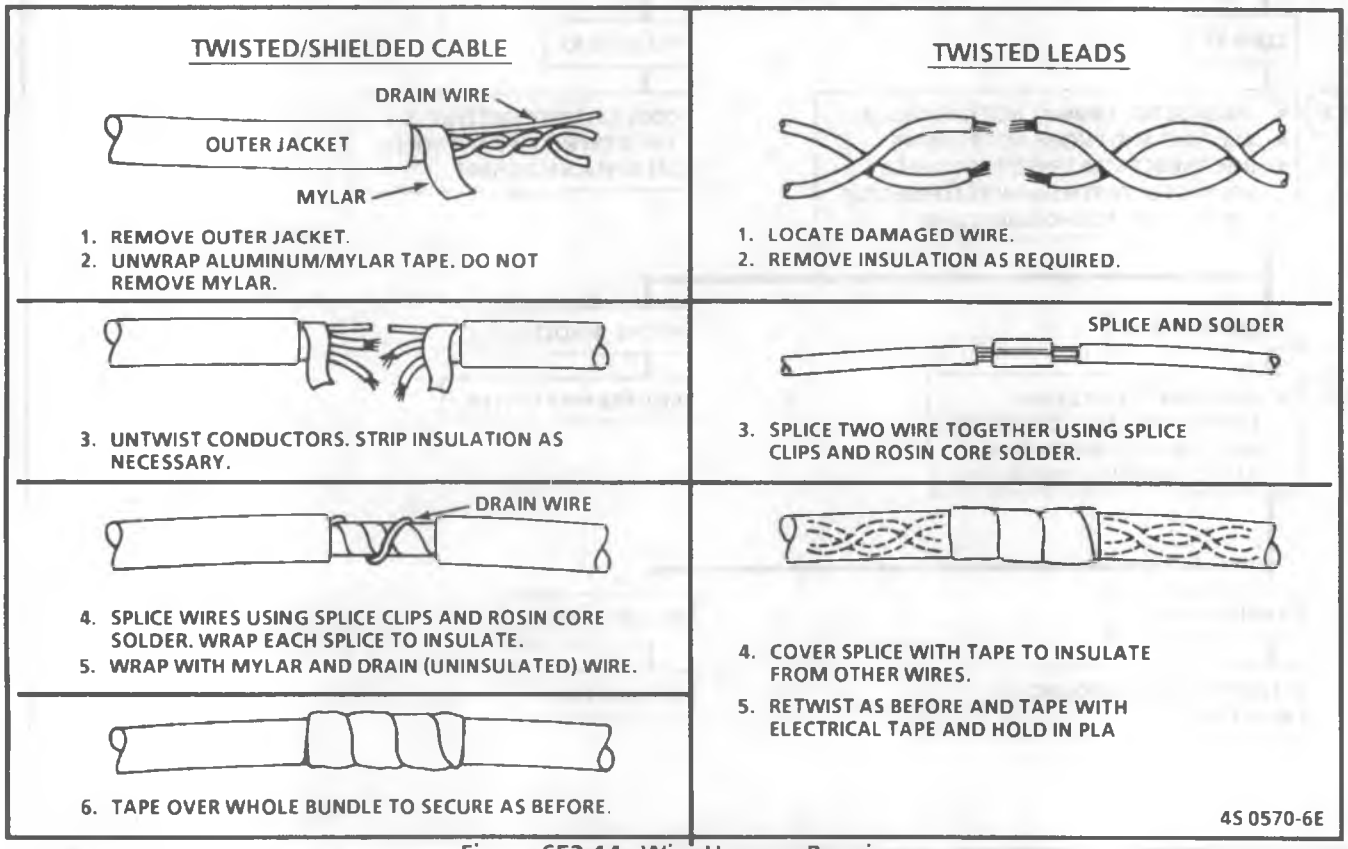

Figure 6E2-14 - Wire Harness Repair

Micro-Pack

Refer to Figure 6E2-15 on repair procedure for replacement of a Micro-Pack terminal.

Metri-Pack

Some connectors, such as the Coolant Sensor, use terminals called Metri-Pack Series 150, (Figure 6E2-16).

They are also called "Pull-to-Seat" terminals, because to install a terminal on a wire, the wire is first inserted through the seal (5) and connector (4). Then, the terminal is crimped on the wire and the terminal pulled back into the connector to seat it in place.

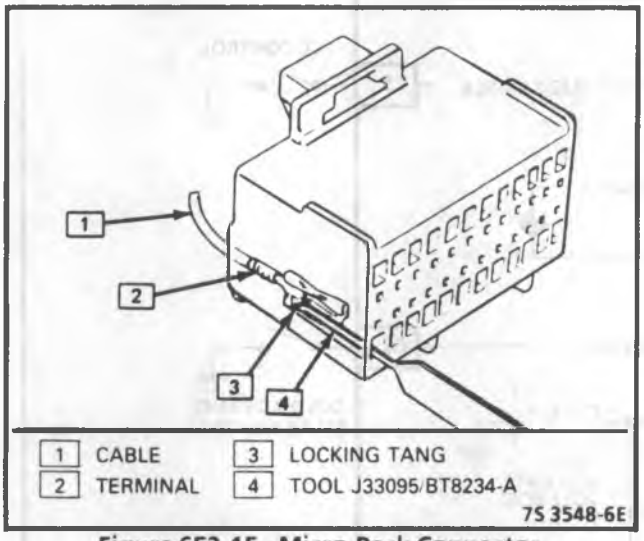

Figure 6E2-15 - Micro-Pack Connector

To remove a terminal:

1. Slide the seal back on the wire.
2. Insert tool (3) BT-8518, or J 35689, or equivalent, as shown in insert "A" and "B", to release the terminal locking tab (2).
3. Push the wire and terminal out through the connector.

If re-using the terminal, reshape the locking tang (2).

Weather-Pack

A Weather-Pack connector can be identified by a rubber seal at the rear of the connector. This connector, which is used in the engine compartment, protects against moisture and dirt which could create oxidation and deposits on the terminals. This protection is important because of the very low voltage and current levels found in the electronic system.

Repair of a Weather-Pack terminal is shown in Figure 6E2-19. Use tool J 28742, or BT-8234-A, to remove the pin and sleeve terminals.

If removal is attempted with an ordinary pick, there is a good chance that the terminal will be bent or deformed. And, unlike standard blade type terminals, these terminals cannot be straightened once they are bent.

Make certain that the connectors are properly seated and all of the sealing rings in place when connecting leads. The hinge type flap provides a backup, or secondary locking feature for the connector. They are used to improve the connector reliability, by retaining the terminals, if the small terminal lock tangs are not positioned properly.

Weather-Pack connections cannot be replaced with standard connections. Instructions are provided with Weather-Pack connector and terminal packages.

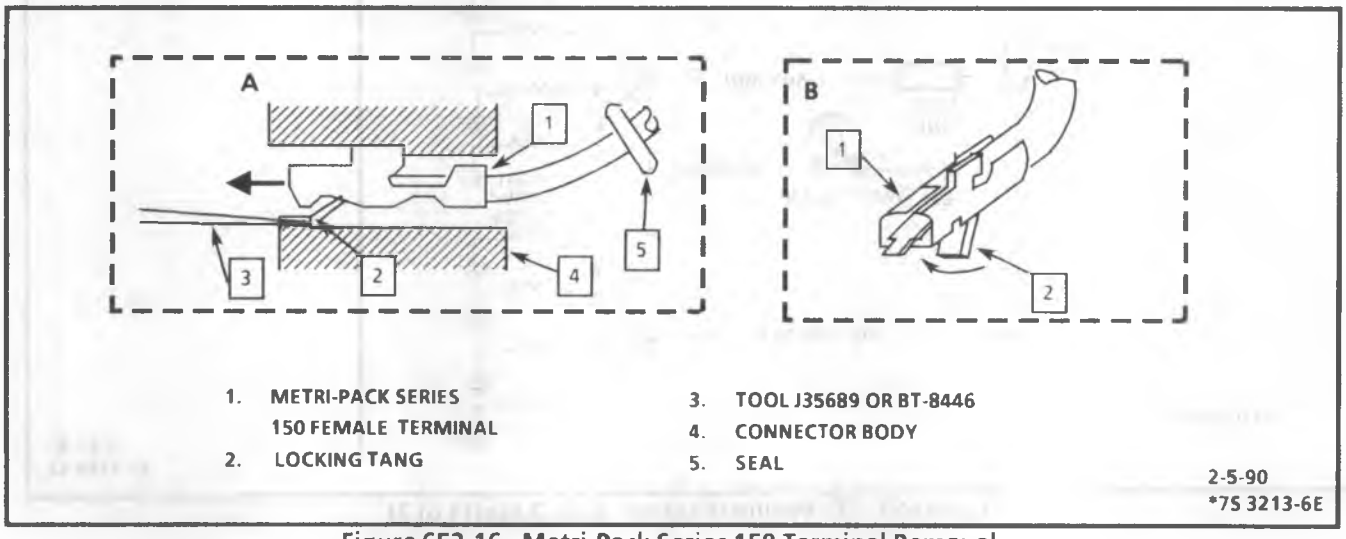

Figure 6E2-16 - Metri-Pack Series 150 Terminal Removal

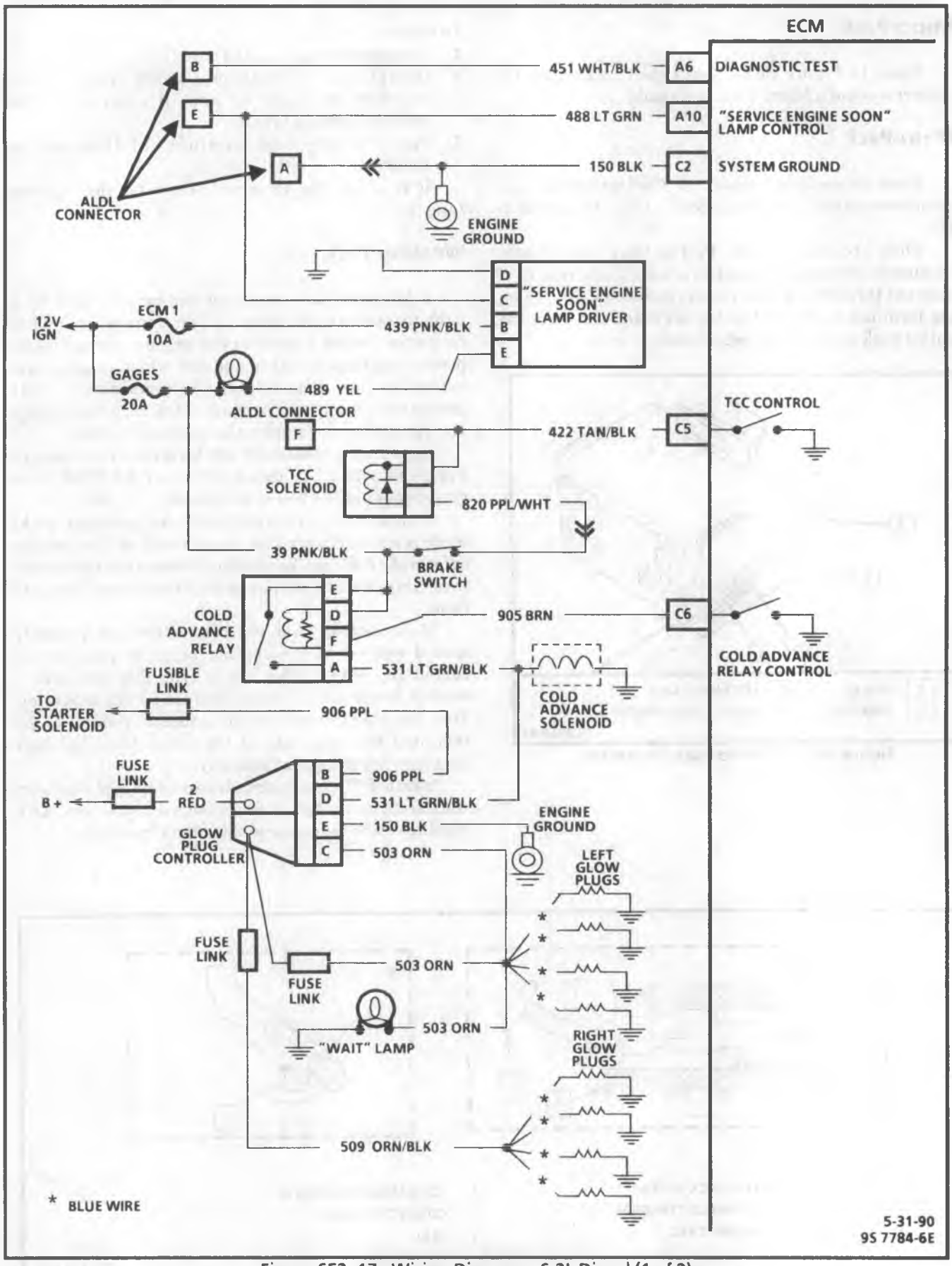

Figure 6E2- 17 - Wiring Diagram - 6.2L Diesel (1 of 2)

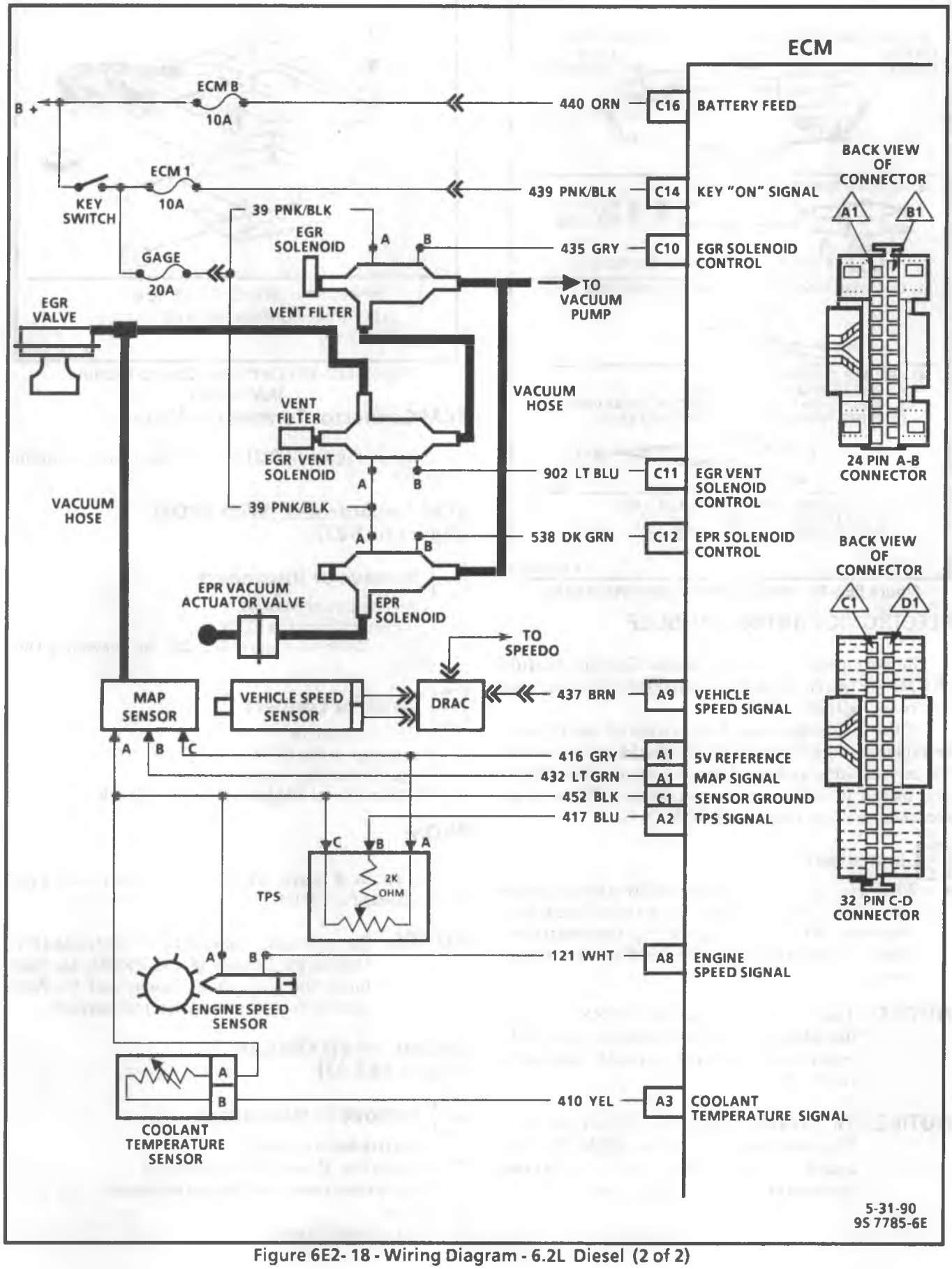

Figure 6E2- 18 - Wiring Diagram - 6.2L Diesel (2 of 2)

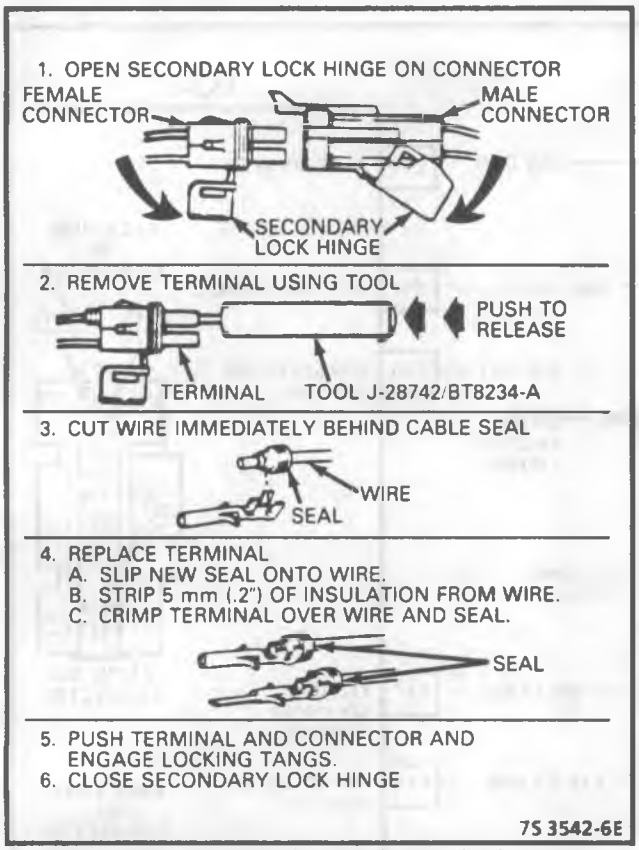

Figure 6E2-19 - Weather-Pack Terminal Repair

ELECTRONIC CONTROL MODULE

Replacement of the Electronic Control Module (ECM), (Figure 6E2-20), consists of a service controller, without a PROM.

If the diagnostic procedures required the ECM to be replaced, the ECM and PROM should be checked for the correct part number. If they are remove the PROM and install it in the service controller. The service controller will not contain a PROM.

Important

- When replacing a production ECM with a service controller, transfer the broadcast code and production ECM part number to the controller label. Do not record information on the access cover.

NOTICE: The ignition must be "OFF," when disconnecting or reconnecting the ECM connector, to prevent internal damage to the ECM.

NOTICE: To prevent possible Electrostatic Discharge damage to the ECM, Do Not touch the connector pins or soldered components on the circuit board.

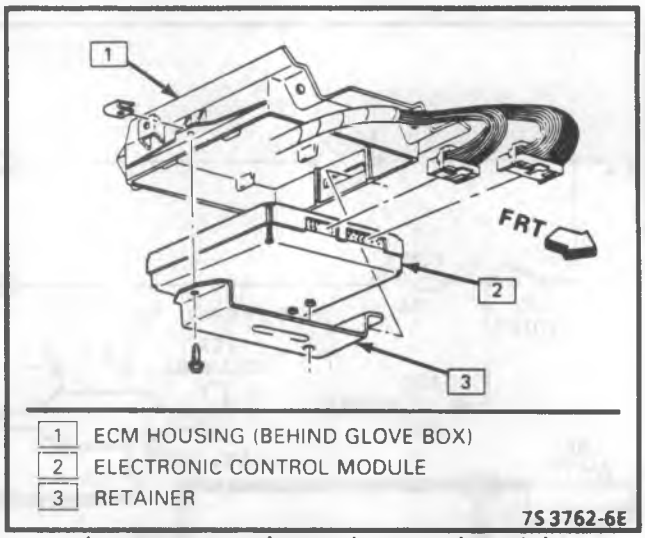

Figure 6E2-20 - Electronic Control Module (R/V Series)

ECM Connector Terminal Voltages

Refer to Figure 6E2-21, for voltage chart, to aid in diagnosis.

ECM Replacement - With PROM (Figure 6E2-22)

Remove or Disconnect

1. Negative battery cable.
2. Connectors from the ECM.
3. ECM. Refer to Figure 6E2-22, for servicing the ECM.

Install or Connect

1. ECM into vehicle.
2. Connector to the ECM.
3. Negative battery cable.
4. Perform Diesel Diagnostic Circuit Check.

PROM

Refer to Figure 6E2-22, for removal and installation of a PROM.

NOTICE: To prevent possible Electrostatic Discharge damage to the PROM, Do Not touch the component leads, and Do Not remove integrated circuit from carrier.

ENGINE SPEED SENSOR (Figure 6E2-23)

Remove or Disconnect

1. Negative battery cables.
2. Air cleaner. Cover intake manifold.
3. Engine speed sensor electrical connector.
4. Clamp.
5. Engine speed sensor.

ECM CONNECTOR IDENTIFICATION

This ECM voltage chart is for use with a digital voltmeter to further aid in diagnosis. The voltages you get may vary due to low battery charge or other reasons, but they should be very close.
B + indicates system voltage.

THE FOLLOWING CONDITIONS MUST BE MET BEFORE TESTING:

- Engine at operating temperature
- Batteries fully charges and glow plugs not cycling
- Test terminal not grounded
- ALDL tool not installed

VOLTAGE

	KEY "ON"	ENG. RUN	CIRCUIT	PIN	WIRE COLOR
	4.76	1.66	MAP SIGNAL	A1	LT GRN
	.2 - 2.2	.2 - 2.2	TPS SIGNAL	A2	DK BLU
(2)	1.9	1.7	COOLANT SENSOR	A3	YEL
			NOT USED	A4	
			NOT USED	A5	
	5.0	5.0	DIAGNOSTIC TERMINAL	A6	WHT/BLK
			NOT USED	A7	
	0 *	0 *	ENGINE SPEED SENSOR	A8	WHT
(1)	10.72	12.32	VEHICLE SPEED SENSOR	A9	BRN
	B +	.46	ECM TO LAMP DRIVER	A10	LT GRN
			NOT USED	A11	
	5.0	5.0	5 VOLT REFERENCE	A12	GRY

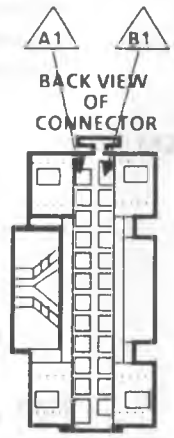

VOLTAGE

WIRE COLOR	PIN	CIRCUIT	KEY "ON"	ENG. RUN
	B1	NOT USED		
	B2	NOT USED		
	B1	NOT USED		
	B1	NOT USED		
	B1	NOT USED		
	B1	NOT USED		
	B1	NOT USED		
	B1	NOT USED		
	B1	NOT USED		
	B1	NOT USED		
	B1	NOT USED		
	B1	NOT USED		

0 *	0 *	SENSOR GROUND	C1	BLK
0 *	0 *	GROUND	C2	BLK/WHT
		NOT USED	C3	
		NOT USED	C4	
B +	B +	TCC SOLENOID	C5	TAN/BLK
10.8	7.7	COLD ADVANCE	C6	BRN
		NOT USED	C7	
		NOT USED	C8	
		NOT USED	C9	
(2) .90	B +	EGR SOLENOID	C10	GRY
(2) .89	B +	EGR VENT SOLENOID	C11	LT BLU
B +	.87	EPR SOLENOID	C12	DK GRN
B +	B +	NOT USED	C13	
		ECM FUSE KEY/ SWITCH	C14	PNK/BLK
		NOT USED	C15	
B +	B +	BATTERY/12 VOLTS	C16	ORN

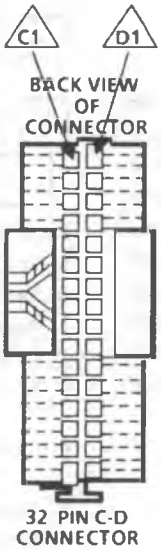

	D1	NOT USED		
	D2	NOT USED		
	D3	NOT USED		
	D4	NOT USED		
	D5	NOT USED		
	D6	NOT USED		
	D7	NOT USED		
	D8	NOT USED		
	D9	NOT USED		
	D10	NOT USED		
	D11	NOT USED		
	D12	NOT USED		
	D13	NOT USED		
	D14	NOT USED		
	D15	NOT USED		
	D16	NOT USED		

1 Varies from 60 to battery voltage depending on position of drive wheels
2 Varies with temperature
* Less than .5 volts

ENGINE 6.2L DIESEL
VEHICLE R,V TRUCK

5-24-90
9S 5390-6E

Figure 6E2-21 - ECM Connector Terminal End View

CODE 51
PROM PROBLEM

- CHECK THAT ALL PINS ARE FULLY INSERTED IN SOCKET.
- IF OK, REPLACE PROM AND RECHECK.
- IF PROBLEM NOT CORRECTED, REPLACE ECM.

THE IGNITION SHOULD ALWAYS BE OFF WHEN INSTALLING OR REMOVING THE ECM

Remove or Disconnect (Figures 1 and 2)

1. Connectors from ECM.
2. ECM mounting hardware.

Important

- ELECTRONIC CONTROL MODULE (ECM) MOUNTING HARDWARE NOT ILLUSTRATED.

3. ECM from passenger compartment.
4. ECM access cover.

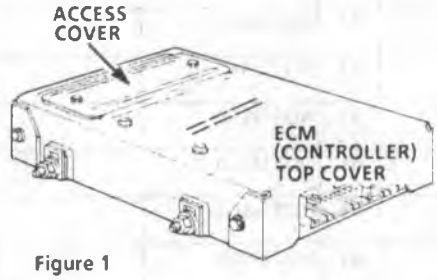

Figure 1

5. PROM removal.

Important

- Using the rocker-type PROM removal tool, engage one end of the PROM carrier with the hook end of the tool. Press on the vertical bar end of the tool and rock the engaged end of the PROM carrier up as far as possible. Engage the opposite end of the PROM carrier in the same manner and rock this end up as far as possible. Repeat this process until the PROM carrier and PROM are free of the PROM socket. The PROM carrier with PROM in it should lift off of the PROM socket easily. PROM carrier should only be removed by using the pictured PROM removal tool (Figure 2). Other methods could cause damage to the PROM or PROM socket.

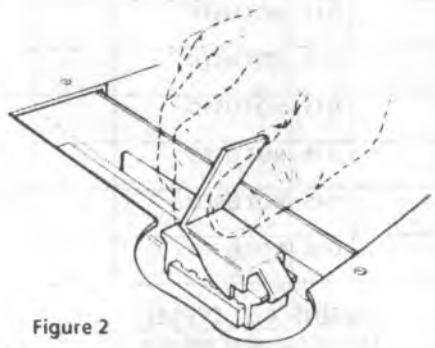

Figure 2

Inspect (Figure 3)

- For correct indexing of reference end of the PROM carrier and carefully set aside. Do not remove PROM from carrier to confirm PROM correctness.

Figure 3 NOTCH IN PROM REFERENCED TO SMALLER NOTCH IN CARRIER AND THE PIN (1) END.

Important (Before installing new PROM)

ANYTIME THE PROM IS INSTALLED BACKWARDS AND THE IGNITION SWITCH IS TURNED ON, THE PROM IS DESTROYED.

Install or Connect (Figures 1 and 3)

1. PROM in PROM socket.

Important

DO NOT press on PROM - ONLY CARRIER.

Small notch of carrier should be aligned with small notch in socket. Press on PROM carrier until it is firmly seated in the socket. Do not press on PROM; only the carrier.

2. Access cover on ECM.
3. ECM in passenger compartment.
4. Connectors to ECM.

Functional Check

1. Turn ignition "ON."
2. Enter diagnostics.
   A. Code 12 should flash four times. (No other codes present.) This indicates the PROM is installed properly.
   B. If trouble Code 51 occurs or if the check engine light is "ON" constantly with not codes, the PROM is not fully seated, installed backwards, has bent pins or is faulty.

7-6-90
5S 1416-6E

Figure 6E2-22 - ECM or PROM Replacement

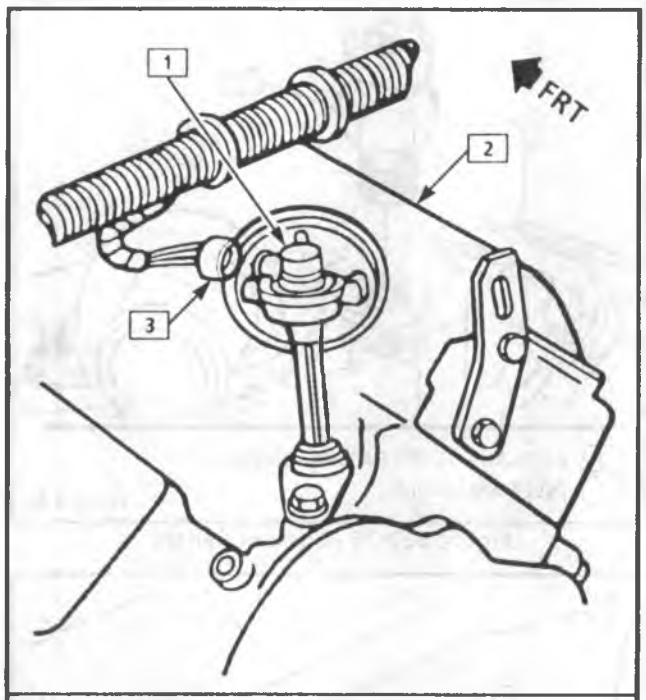

1 ENGINE SPEED SENSOR
2 RIGHT VALVE COVER
3 HARNESS CONNECTOR
MS 9935-6E

Figure 6E2-23 - Engine Speed Sensor

Install or Connect

1. Engine speed sensor assembly and gasket.
2. Clamp.
3. Electrical connector.
4. Air cleaner.
5. Negative battery cables.

THROTTLE POSITION SENSOR

Adjustment

1. Remove air cleaner assembly and related hoses.
2. Disconnect TPS connector. Install jumper wires between TPS and harness using connector test adapter kit J 35616. Three jumpers will be necessary (Figure 6E2-24).
3. Key "ON," engine not running.
4. Install TPS/VRV gage block to J 33043-2, or equivalent, using the .646 side of the block. Position tool between gage boss on injection pump and the wide open stop screw on throttle shaft (Figure 6E2-24).
5. Rotate the throttle lever and hold the wide open stop screw against the gage block.
6. Using a DVM, measure voltage from TPS connector terminals "A" to "C". This is voltage reference. Record the voltage reading.

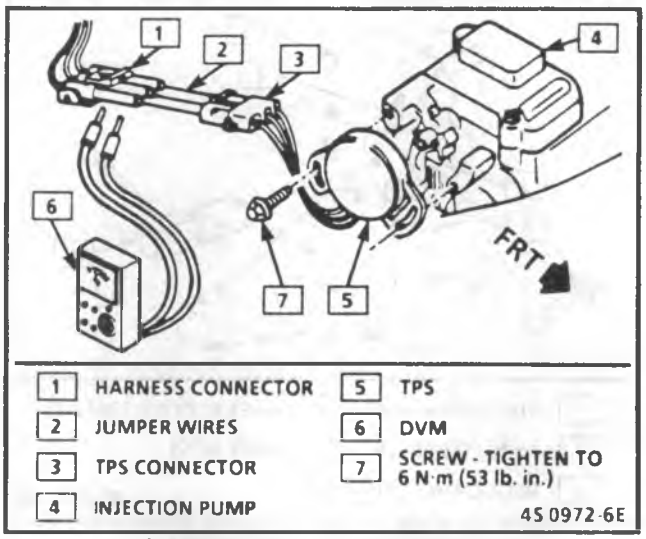

1 HARNESS CONNECTOR
2 JUMPER WIRES
3 TPS CONNECTOR
4 INJECTION PUMP
5 TPS
6 DVM
7 SCREW - TIGHTEN TO 6 N·m (53 lb. in.)
4S 0972-6E

Figure 6E2-24 - TPS Adjustment

7. Now, measure and record voltage between terminals "B" to "C". This is the TPS voltage.
8. Compare the voltage recorded in step 7 under the corresponding voltage reference recorded in step 6 against the data on the Vehicle Emission Control Information label. The TPS voltage should be within ± .03 volts of voltage shown. Example:

$$\frac{3.50 \text{ volts (Step 7)}}{5.01 \text{ volts (Step 6)}} = .70 \text{ voltage ratio from label}$$

9. If no adjustment is necessary, proceed to step 12.
10. To adjust TPS, loosen the two attaching screws and rotate TPS, until the correct TPS voltage is obtained.
11. When the correct TPS value is obtained, tighten the TPS attaching screws to 6 N·m (53 lb. in.).
12. Check TPS voltage by releasing the throttle lever allowing it to return the idle stop position measuring voltage from terminals "B" to "C". Return lever against gage block. Voltage should be less than 2.2 volts at closed throttle and return to TPS voltage within ± .03 volts of the adjusted voltage, when throttle is again opened against gage block If voltage does not return to TPS voltage, repeat steps 10, 11 and 12. If at closed throttle, voltage is not less than 2.2 volts or adjustment cannot be made, replace TPS.
13. Remove gage block tool.
14. Turn ignition "OFF."
15. Remove jumper wires and reconnect TPS harness connector.
16. Reinstall Air Cleaner Assembly and related hoses.

Remove or Disconnect

1. Air cleaner and related hoses.
2. TPS connector.
3. TPS attaching screws.
4. TPS.

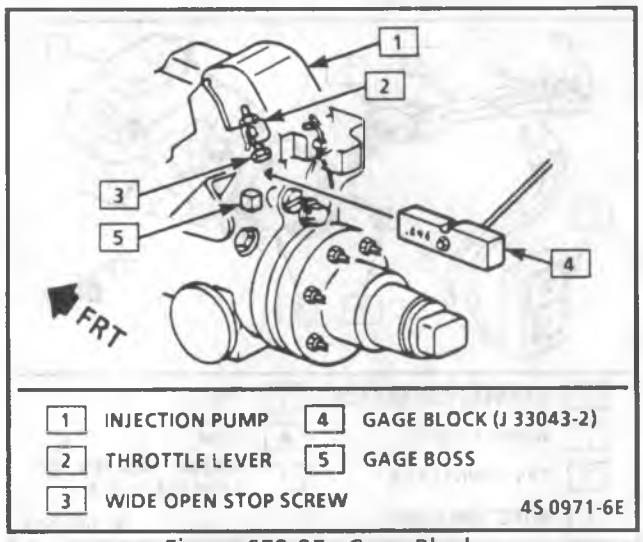

Figure 6E2-25 - Gage Block

Install or Connect

1. TPS and attaching screws.
2. Adjust TPS voltage following procedure above.
3. TPS connector.
4. Air cleaner and related hoses.

COOLANT SENSOR (Figure 6E2-26)

NOTICE: Care must be taken, when handling coolant sensor. Damage to coolant sensor will affect proper operation of the Cold Advance and Glow Plug system.

Remove or Disconnect

1. Negative battery cables.
2. Drain cooling system below level of sensor.
3. Electrical connector.
4. Coolant sensor.

Install or Connect

1. Sensor in engine.
2. Electrical connector.
3. Refill coolant system.
4. Negative battery cables.

MAP SENSOR (Figure 6E2-27)

Other than checking for loose hoses and electrical connections, the only service possible is unit replacement.

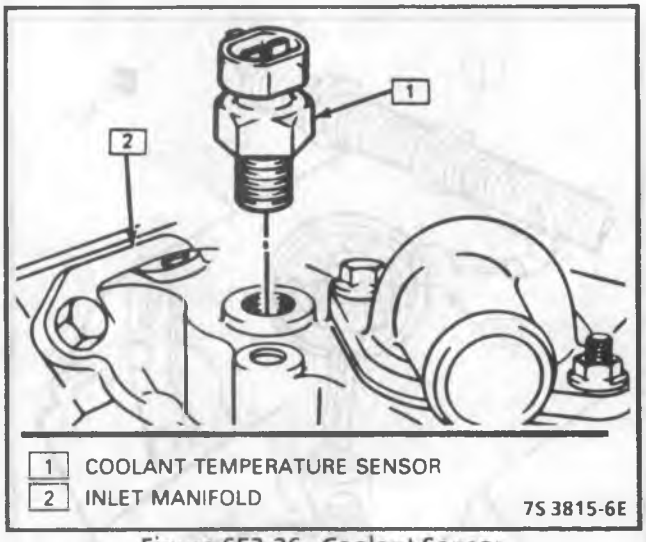

Figure 6E2-26 - Coolant Sensor

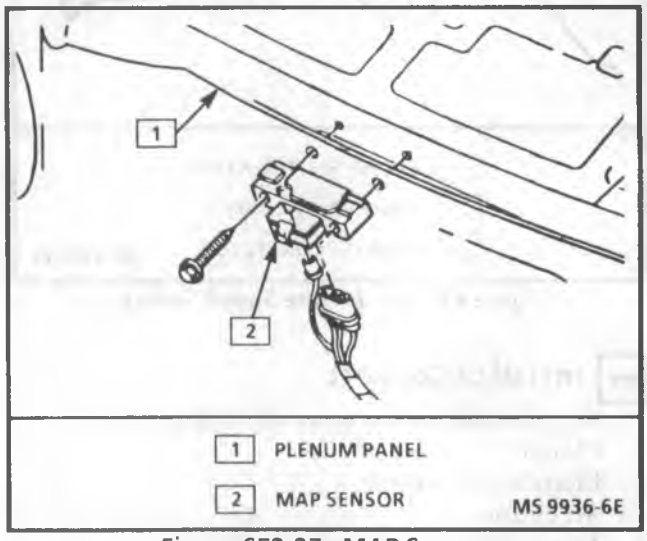

Figure 6E2-27 - MAP Sensor

Refer diagnosis that checks MAP sensor circuit and replace sensor as required.

Remove or Disconnect

1. Electrical connector.
2. Vacuum hose.
3. MAP sensor.

Install or Connect

1. MAP sensor.
2. Vacuum hose.
3. Electrical connector.

EXHAUST GAS RECIRCULATION (EGR) SYSTEM

GENERAL DESCRIPTION

The EGR system lowers the formation of nitrogen oxides by reducing combustion temperature. This is done by introducing exhaust gases into the cylinders through an EGR valve. The ECM, in the Diesel Electronic Control system, controls the amount of EGR to meet emission control requirements and maintains good driveability through an EGR solenoid, which regulates the vacuum to the EGR valve. Two main sensor inputs to the ECM are used to calculate the amount of EGR.

The EGR valve (Figure 6E2-28), installed on the intake manifold, introduces the exhaust gases to the incoming fresh air at the engine crossover. The EPR valve (Figure 6E2-29), installed between the exhaust manifold and the exhaust pipe, is used to increase exhaust back pressure during idle, which increases the exhaust flow through the EGR system. The EPR valve is normally open.

A vacuum pump is required to provide a vacuum source to operate the EGR system.

Engine Speed Sensor (Figure 6E2-23), mounted at the rear of the engine is used as an input to the ECM to measure the rpm of the engine.

Throttle Position Sensor (Figure 6E2-24), mounted to the injection pump throttle valve, is used as an input to the ECM to measure the degree of throttle angle.

MAP Sensor (Figure 6E2-27), mounted on the left side of the cowl is used to measure the amount of absolute pressure in the EGR vacuum line.

EGR/EPR Solenoid Assembly

The EGR/EPR Solenoid Assembly (Figure 6E2-30) is mounted on top rear of the engine. The ECM controls the EGR solenoid to regulate the vacuum to the EGR valve. By controlling the time the EGR solenoid is "ON" or "OFF" regulates the amount of EGR. The ECM calculates the amount of EGR based on inputs from the engine speed sensor and the throttle position sensor. The ECM is programmed to vary the "ON" and "OFF" time of the EGR solenoid, based on these two sensor inputs. To monitor the ECM control of EGR, a MAP sensor is used to measure the amount of absolute pressure in the EGR vacuum line. If a minor variation is calculated EGR and actual EGR as monitored by the MAP sensor exists, the ECM makes a correction. If the variation exceeds an amount in excess of what the ECM can correct for, an error is detected by the ECM and the system will go into default.

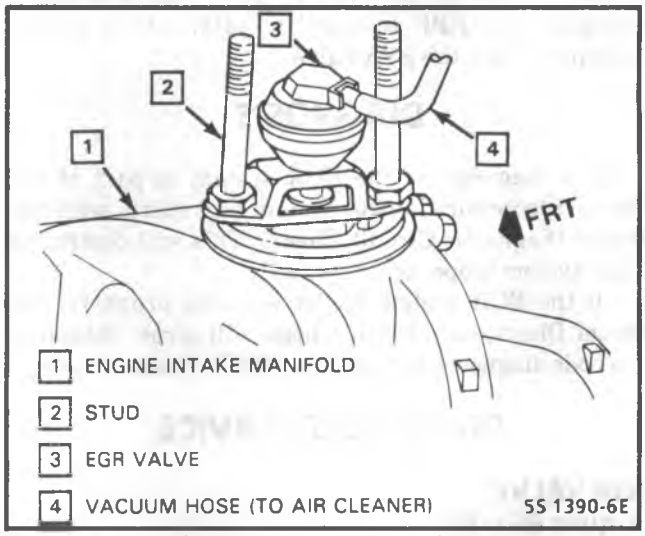

Figure 6E2-28 - EGR Valve

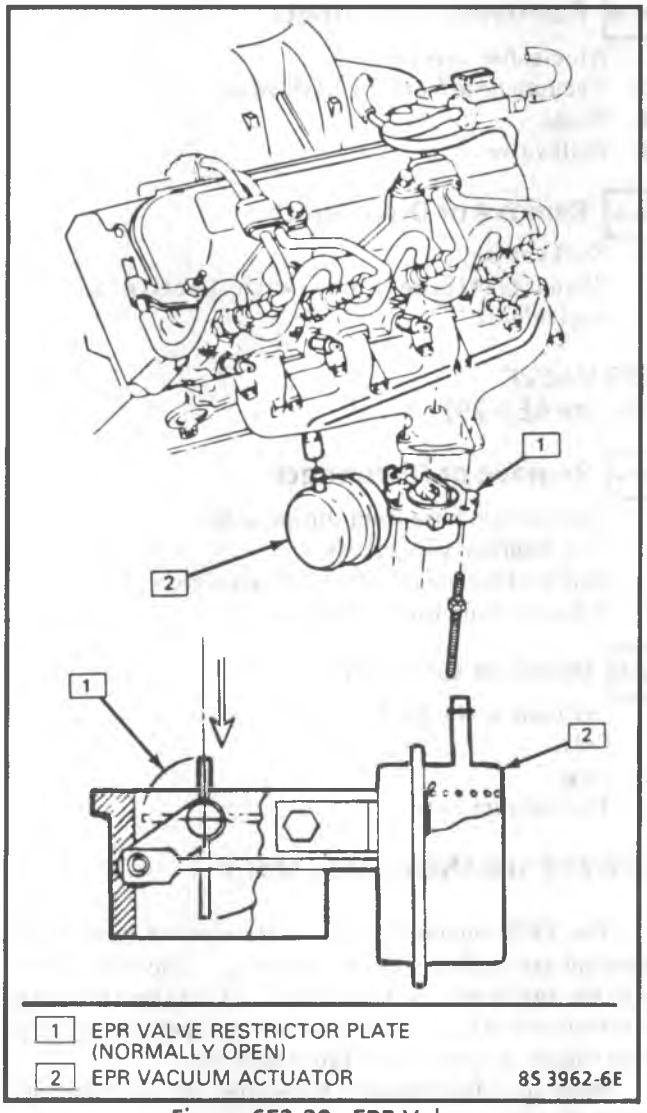

Figure 6E2-29 - EPR Valve

When the ECM recognizes the operating range for no EGR, the EGR vent solenoid operates to allow rapid venting of vacuum to the EGR valve. The ECM signal energizes the EPR solenoid at idle, which allows vacuum to close the EPR valve.

DIAGNOSIS

The diagnosis of the EGR system is part of the Diesel Electronic Control system and starts with the Diesel Diagnostic Circuit Check. This will determine if the system is operating correctly.

If the EGR system is not working properly, the Diesel Diagnostic Circuit Check will direct diagnosis to a code diagnosis or to another DEC system circuit.

ON-VEHICLE SERVICE

EGR VALVE (Figure 6E2-28)

Remove or Disconnect

1. Air cleaner cover.
2. Vacuum hose from the EGR valve.
3. Studs.
4. EGR valve.

Remove or Disconnect

1. EGR valve.
2. Studs (seal the studs with Loctite 272 or equivalent).

EPR VALVE (Figure 6E2-29)

Remove or Disconnect

1. The vacuum hose from the actuator.
2. Clip from the valve lever.
3. Bolt holding the actuator to the valve.
4. Actuator from the EPR valve.

Install or Connect

1. Actuator to the EPR valve.
2. Bolt.
3. Clip.
4. The vacuum hose.

EGR/EPR SOLENOID ASSEMBLY

The EGR solenoid, EGR vent solenoid, and EPR solenoid are replaced as an assembly. The vent filter can be replaced as required. If diagnosis has determined that any solenoid does not operate, replace with complete assembly (Figure 6E2-30).

Refer to "Maintenance Schedule" for information about vent filters.

Remove or Disconnect

1. Negative battery cables.
2. Electrical connectors from the solenoids.
3. Vacuum hoses from assembly.
4. EGR/EPR solenoid assembly.

Install or Connect

1. EGR/EPR solenoid assembly.
2. Vacuum hoses to assembly.
3. Electrical connectors to the solenoids.
4. Negative battery cables.
5. Perform Diesel Diagnostic Circuit Check.

GENERAL DESCRIPTION

AUTOMATIC TRANSMISSION TCC System

The Torque Converter Clutch (TCC) system uses a solenoid operated valve, in the automatic transmission, to couple the engine flywheel to the output shaft of the transmission through the torque converter, which increases fuel economy.

Operation

For the converter clutch to apply, two conditions must be met;

- Internal transmission fluid pressure must be correct. For information on internal transmission operation, see SECTION 7A. This section will cover only the electrical operation of TCC system.
- The ECM completes a ground circuit, to energize a TCC apply solenoid in the transmission, which moves a check ball in a fluid line (Figure 6E2-31). This allows the converter clutch to apply, if the hydraulic pressure is correct, as described above.
- Throttle Position Sensor (TPS) - After the converter clutch applies, the ECM uses the information from the TPS to release the clutch, when the vehicle is accelerating, or decelerating, at a certain rate.
- Brake Switch - This switch, in the TCC circuit, opens when the brake pedal is depressed. This de-energizes the TCC solenoid.

DIAGNOSIS

TCC SYSTEM

If the converter clutch is applied at all times, the engine will stall immediately, just as in a manual transmission with the clutch applied.

If the converter clutch does not apply, fuel economy may be lower than expected. If the Vehicle Speed Sensor (VSS) fails, the TCC will not apply.

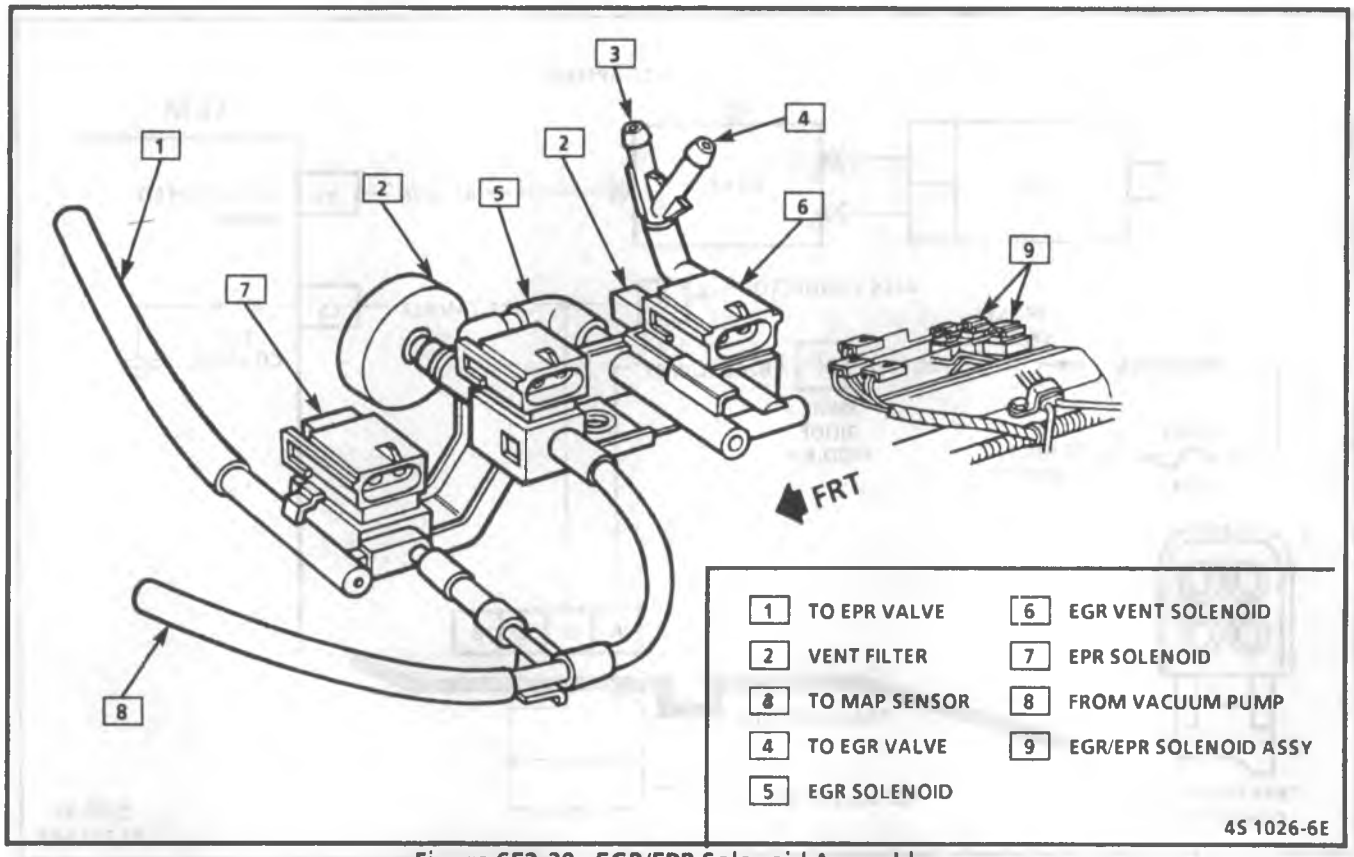

Figure 6E2-30 - EGR/EPR Solenoid Assembly

TORQUE CONVERTER CLUTCH (TCC)

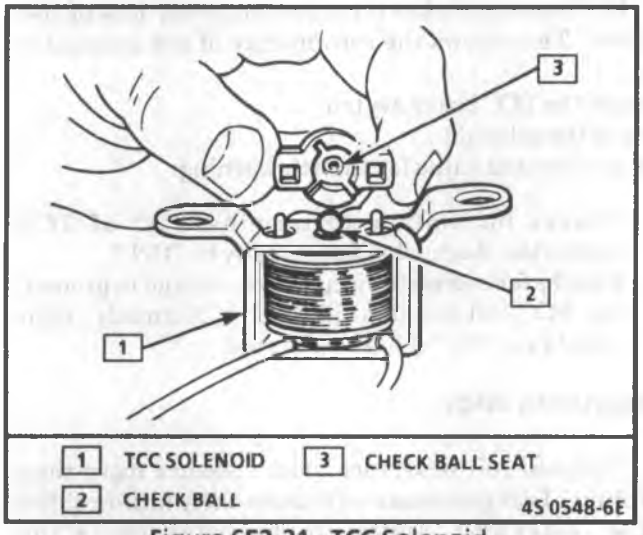

Figure 6E2-31 - TCC Solenoid

The Torque Converter Clutch (TCC) system has different operation characteristics than an automatic transmission without TCC. If the driver complains of a "chuggle" or a "surge" condition, the vehicle should be road tested and compared to a similar vehicle, to see if a real problem exists. The Owner's Manual section on TCC operation should be reviewed with the driver. Another TCC complaint may be a downshift felt, when going up a grade, especially with cruise control. This may not be a downshift, but a clutch disengagement due to the change in TPS to maintain cruising speed.

The electrical diagnosis of the TCC system is covered in the appropriate "Torque Converter Clutch Electrical Diagnosis" chart.

If the ECM detects a problem in the VSS system, a Code 24 should set. In this case, see Code 24 chart.

ON-VEHICLE SERVICE

TCC SYSTEM

- Refer to SECTION 7A for TCC solenoid replacement.
- Refer to SECTION 8C for brake switch replacement.
- Refer to "Diesel Electronic Control System" for repair of wiring and replacement of the ECM.

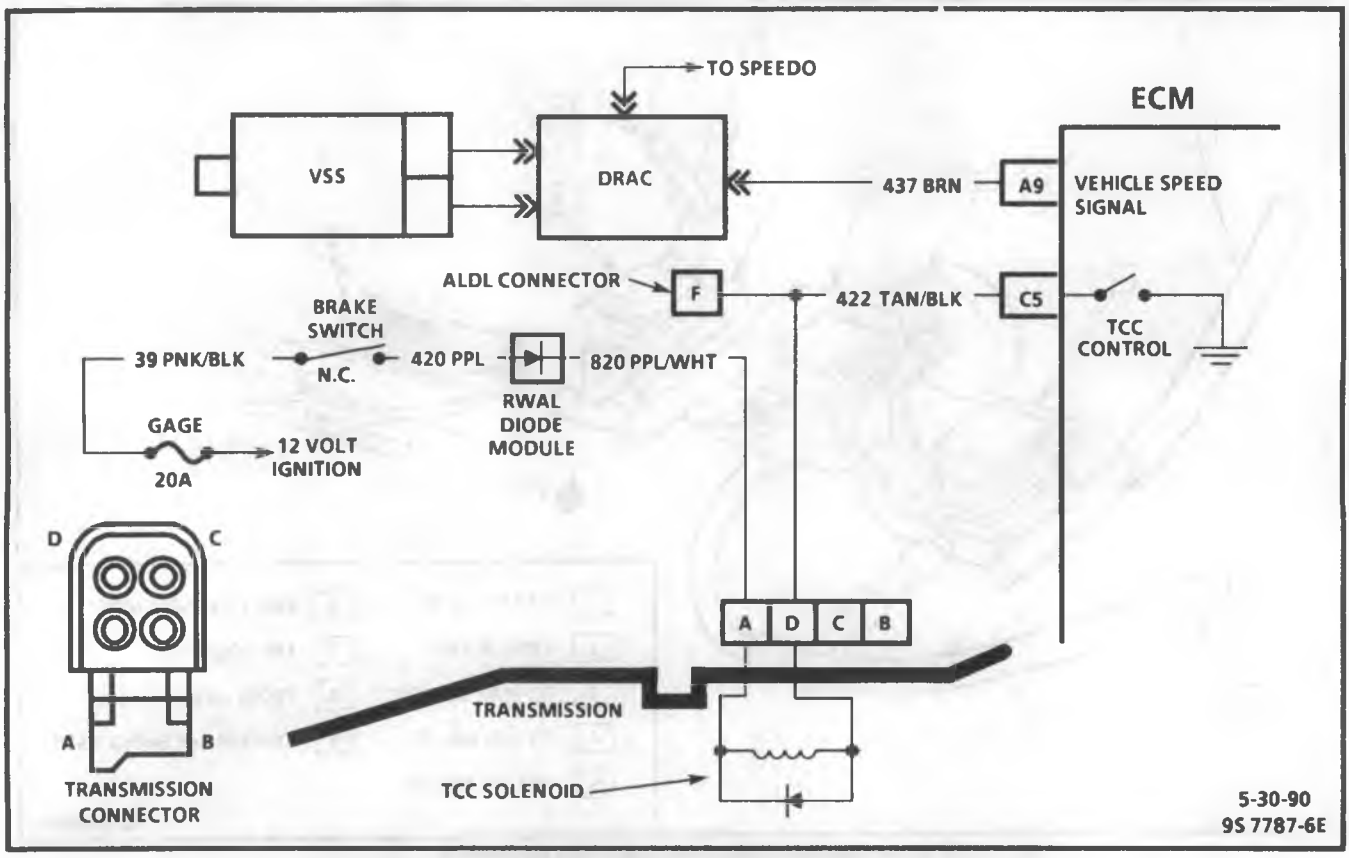

TORQUE CONVERTER CLUTCH (TCC)

ELECTRICAL DIAGNOSIS
6.2L (LH6) DIESEL

Circuit Description:

The purpose of the automatic Torque Converter Clutch (TCC) feature is to eliminate the power loss of the torque converter stage when the vehicle is in a cruise condition. This allows the convenience of the automatic transmission and the fuel economy of a manual transmission.

Fused battery voltage is supplied to the TCC solenoid through the TCC brake switch.

The ECM will engage TCC by grounding CKT 422 to energize the solenoid.

The ECM completes the circuit whenever the TPS exceeds a calibrated value for throttle opening.

Test Description: Number(s) below refer to circled number(s) on the diagnostic chart.

1. Checks for complete circuit, from key switch through solenoid, up to test point. Test light should be "ON" normally, since ECM has not completed circuit yet.
2. Checks continuity through brake switch and TCC solenoid.
3. Checks for ECM to complete circuit to ground to energize TCC solenoid and engage TCC. Test light should normally go out when ECM completes circuit.
4. Checks for TPS signal. If signal to ECM is correct, fault is in ECM connection or ECM. If TPS signal to ECM is incorrect (voltage), proper operation will not occur.
5. Checks for ground in circuit to ECM terminal "C-5". Normally, light should be "OFF."
6. Checks for voltage to terminal "A" of TCC connector. Light should normally be "ON."
7. Checks for complete circuit from voltage to ground, via TCC test terminal in ALDL. Normally, light should go "ON," if harness is good.

Diagnostic Aids:

Solenoid coil resistance must measure more than 20 ohms. Less resistance will cause early failure of the ECM "DRIVER." Using an ohmmeter, check the solenoid coil resistance of all ECM controlled solenoids and relays, before installing a replacement ECM. Replace any solenoid, or relay, that measures less than 20 ohms resistance.

TORQUE CONVERTER CLUTCH (TCC)

ELECTRICAL DIAGNOSIS 6.2L (LH6) DIESEL

- USING A "SCAN" TOOL CHECK THE FOLLOWING AND CORRECT IF NECESSARY.
- TPS - BE SURE TPS SIGNAL IS NOT ERRATIC.
- VSS - BE SURE "SCAN" DISPLAYS VSS WITH DRIVE WHEELS TURNING. IF CODE 24 IS PRESENT, SEE CODE CHART 24.

1
- CHECK TPS ADJUSTMENT.
- MECHANICAL CHECKS, SUCH AS LINKAGE, OIL LEVEL, ETC. SHOULD BE PERFORMED PRIOR TO USING THIS CHART.
- KEY "ON." ENGINE STOPPED.
- CONNECT TEST LIGHT TO ALDL CONNECTOR TERMINAL "F" AND GROUND.
- LAMP SHOULD "LIGHT." DOES IT?

YES

2
- DEPRESS BRAKE PEDAL.
- LIGHT SHOULD GO OUT. DOES IT?

YES

3
- IGNITION "ON," ENGINE "OFF."
- RELEASE BRAKE PEDAL.
- INCREASE THROTTLE POSITION TO ABOUT 25% THROTTLE.
- LIGHT SHOULD GO OUT. DOES IT?

NO

8
- CHECK VOLTAGE AT ECM TERMINAL "A2" AT CLOSED THROTTLE AND WOT POSITIONS.
- SHOULD BE UNDER 1 VOLT AT CLOSED THROTTLE AND ABOUT 5 VOLTS AT WOT. IS IT?

YES

CHECK FOR GOOD CONTACT BETWEEN TERMINAL "C5" AND ECM.
IF GOOD TERMINAL CONTACT, REPLACE ECM.

NO

SEE TPS ADJUSTMENT

NO

BRAKE SWITCH OUT OF ADJUSTMENT OR FAULTY,
OR
CKT 422 SHORTED TO VOLTAGE.

YES

TCC CIRCUIT OK. BE SURE VEHICLE IS EQUIPPED WITH THE CORRECT PROM.

NO

5
- DISCONNECT TCC ELECTRICAL CONNECTOR.
- CONNECT TEST LIGHT BETWEEN TERMINAL "A AND D."
- LAMP SHOULD NOT "LIGHT." DOES IT?

YES

CKT 422 SHORTED TO GROUND
OR
FAULTY ECM.

NO

6
- CONNECT TEST LIGHT FROM TERM. "A" TO GROUND.
- LAMP SHOULD "LIGHT." DOES IT?

YES

7
- GROUND ALDL TERMINAL "F."
- WITH TEST LIGHT CONNECTED BETWEEN TRANSMISSION CONNECTOR TERMINALS "A & D."
- THE LAMP SHOULD "LIGHT" DOES IT?

YES

3

FAULTY TCC CONNECTION,
OR
TCC SOLENOID,
OR
FAULTY INTERNAL WIRING.

NO

REPAIR OPEN CIRCUIT BETWEEN TRANSMISSION & ALDL TERMINAL "F".

NO

OPEN IN CKT 39,
OR
TCC BRAKE SWITCH CIRCUIT
OR
ADJUST SWITCH.

5-8-90
MS 9736-6E

GLOW PLUG CONTROL SYSTEM

GENERAL DESCRIPTION

GLOW PLUG CIRCUIT

In the diesel engine, air alone is compressed in the cylinder; then, after the air has been compressed, a charge of fuel is sprayed into the cylinder and ignition occurs, due to the heat of compression. Eight glow plugs are used to preheat the chamber as an aid to starting (Figure 6E2-32).

The diesel glow plug system consists of an integral-electronic control/glow plug relay assembly, 6-volt glow plugs, Cold advance relay, ECM, and a glow plug lamp.

GLOW PLUGS (Figure 6E2-32)

These are 6-volt heaters (operated at 12 volts) that turn "ON," when the engine control switch is turned to the run position, prior to starting the engine. They remain pulsing a short time after starting, then automatically turn "OFF."

INSTRUMENTATION

Vehicles with the diesel engine have special instrumentation indicators to permit the operator to properly apply the starting procedure. A glow plug "wait" lamp, on the instrument panel, provides this information on engine starting conditions.

Vehicles equipped with diesel engines have a water in fuel lamp and low engine coolant lamp. Refer to the engine fuel and engine cooling sections for information on these systems.

ELECTRONIC CONTROLLER/GLOW PLUG RELAY ASSEMBLY (Figure 6E2-33)

The assembly contains the circuitry, which monitors and controls glow plug relay operation. Information is received at pins "B" and "C", which is used by the controller to determine glow plug operating requirements. Pin "B" senses voltage at the starting motor solenoid. Pin "C" senses glow plug voltage. Pin "D" supplies 12 volts, through the Cold Advance relay, to operate the controller, only when engine coolant temperature is below approximately 27°C (80°F). Pin "E" is the controller ground. The controller is mounted at the rear of the left cylinder head on two studs.

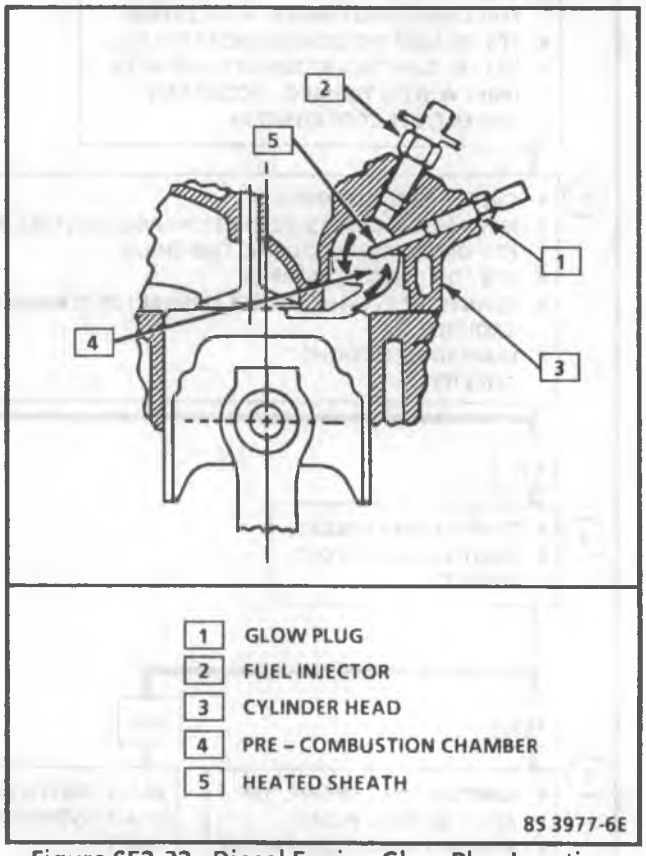

Figure 6E2-32 - Diesel Engine Glow Plug Location

CIRCUIT OPERATION

A normal functioning system operates as follows:

A. Key "ON," engine not running and at room temperature.
   1. Glow plugs "ON" for 4 to 6 seconds, then "OFF" for about 4.5 seconds.
   2. Then cycle; "ON" for about 1.5 seconds, "OFF" for about 4.5 seconds, and continue to cycle 1.5 "ON," 4.5 "OFF," for a total duration (including the initial 4 to 6 seconds) of about 20 seconds.

B. If the engine is cranked during or after the above sequence, the glow plugs will cycle "ON"/"OFF" for a total duration of 25 seconds after the engine control switch is returned from the crank position, whether the engine starts or not. The engine does not have to be running to terminate the glow plug cycling.

All the times shown above are approximate, because they vary with initial engine temperature. The initial "ON" time and cycling "ON"/"OFF" times vary also, with system voltage and/or temperature. Lower temperatures cause longer duration of cycling.

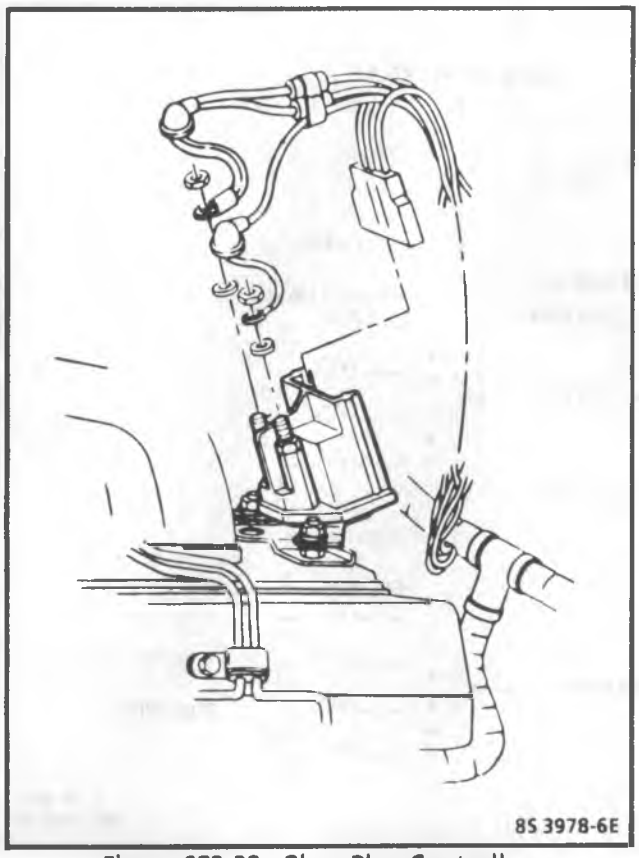

Figure 6E2-33 - Glow Plug Controller

GLOW PLUG AFTER START

The glow plug controller provides glow plug operation after starting a cold engine. This after start operation is initiated when the engine control switch is returned to RUN, from the START position. While loss of this function may not cause a cold start complaint, it may result in excessive white smoking and/or poor idle quality after start. To check for proper operation of this circuit, proceed as follows:

1. With the engine cold, 27°C (80°F), turn the engine control switch to the RUN position and let the glow plugs cycle.
2. After 2 minutes, crank the engine for 1 second. (It is not important that the engine starts.) Return the engine control switch to RUN. Glow plugs should cycle at least once after cranking.
3. If the glow plugs do not turn "ON," disconnect the controller connector, and probe harness connector terminal "B" with a test light connected to ground. The light should be "OFF," with the engine control switch in RUN and "ON," when the engine is cranked.
4. If the light does not operate as just described, repair a short or open in the engine harness purple wire.
5. If the light works right, but the after start glow plug feature does not, replace the controller.

DIAGNOSIS

CIRCUIT CHECK

If the system does not operate as described in Circuit Operation, check the following:

Inspect

1. All connectors.
2. Engine harness ground connection to engine.

Tighten

- Nut to 11 N·m (8 lb. ft.).

3. Four-wire connector at controller. It must be fully seated and latched.
4. Both controller copper stud upper nuts.

Tighten

- Nuts to 5 N·m (48 lb. in.).
- Do not tighten lower nuts.

5. Glow plug lamp on instrument panel for tight connection and operation.

If all connections are intact, but the glow plug system does not operate as stated, perform the Glow Plug Circuit Electrical Check. It provides a fast way to determine if the glow plug system is working properly. Use this procedure, whenever there is doubt about correct system operation.

NOTICE: Do not manually bypass the relay in the glow plug controller. Do not jump start with more than a 12 volt system. The glow plugs could be damaged.

ON-VEHICLE SERVICE

Check the system and its components on the vehicle.

None of the components are serviceable. When installing new components and making connections, be sure that connections are tight and torque values are used. Torque the glow plugs to 17 N·m (12 lb. ft.), when installed.

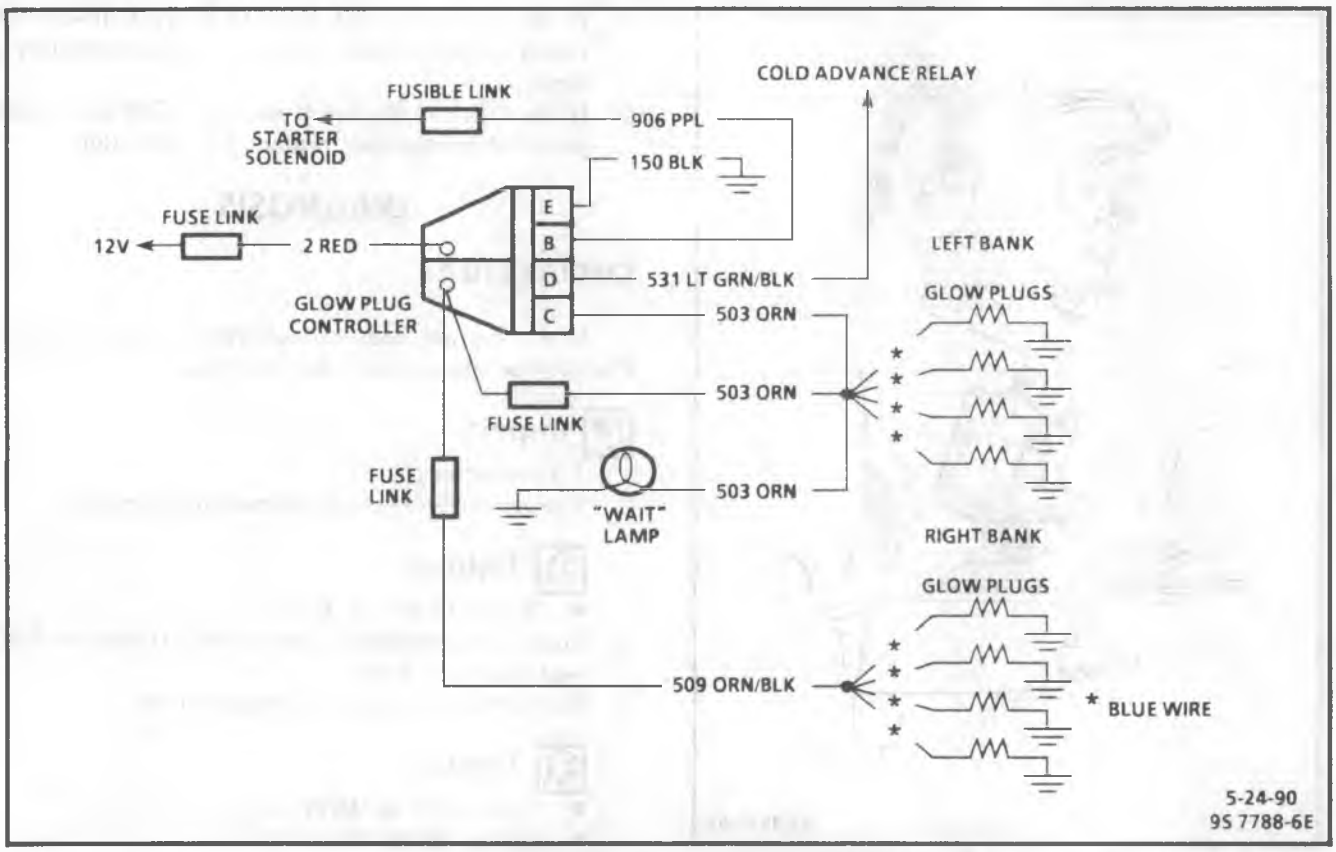

GLOW PLUG CIRCUIT

(ELECTRICAL CHECK)
6.2L (LH6) DIESEL

Circuit Description:

With the key "ON," and coolant temperature below approximately 65°C (150°F), the ECM turns "ON" the cold advance relay to supply 12 volts to the glow plug controller and the cold advance solenoid. The controller, in turn, will cycle the glow plugs "ON" and "OFF" for a pre-determined amount of time. After the engine is cranked, the glow plugs will again cycle "ON" and "OFF," for a short period of time.

Test Description: Number(s) below refer to circled number(s) on the diagnostic chart.

1. Disconnecting the coolant sensor sends a low temperature signal to the ECM. The ECM turns "ON" the cold advance relay which sends 12 volts to Pin "D" of the glow plug controller. If the test light comes "ON" during this test, the cold advance circuit and ECM are "OK."
2. If the relay contacts are shorted together, there will be 12 volts supplied to the glow plugs at all times. Since these are 6 volt glow plugs, they will be damaged by the constant high voltage.
3. This step checks for high resistance in the feedback circuit to the controller. High resistance in this circuit will signal the controller to turn "OFF."
4. This step determines if the controller is cycling its internal relay. The test light should cycle "ON" and "OFF" if the controller is operating.
5. This step checks for a complete circuit between the controller and each glow plug. If the test light fails to light, that glow plug feed circuit is open. It may be necessary to turn the key "OFF" for 10 seconds and "ON" again to keep the controller cycling.

GLOW PLUG CIRCUIT

(ELECTRICAL CHECK) 6.2L (LH6) DIESEL

THIS CHART ASSUMES NO CODE 14 OR 15 IS STORED AND THAT COOLANT SENSOR CIRCUIT IS OPERATING PROPERLY.

- FUEL SYSTEM "OK."
- BATTERY VOLTAGE ABOVE 12.4 VOLTS.
- CRANKING SPEED ABOVE 100 RPM.
- WITH A VOLT METER, CHECK VOLTAGE AT "BATT" TERMINAL OF GLOW PLUG CONTROLLER (CKT 2).

ABOVE 11 VOLTS

- KEY "OFF."
- WITH VOLTMETER, CHECK VOLTAGE AT "GLOW PLUG" TERMINAL OF GLOW PLUG CONTROLLER (CKTs 503 & 509).

BELOW 11 VOLTS

REPAIR HIGH RESISTANCE OR OPEN IN CKT 2 TO THE CONTROLLER.

BELOW 1 VOLT

(1)
- DISCONNECT ALL GLOW PLUGS.
- USE AN OHM METER TO MEASURE CONTINUITY BETWEEN EACH GLOW PLUG TERMINAL AND GROUND. REPLACE ANY GLOW PLUG THAT MEASURES MORE THAN 2 OHMS.
- RECONNECT ALL GLOW PLUGS.
- DISCONNECT COOLANT SENSOR.
- DISCONNECT GLOW PLUG CONTROLLER HARNESS CONNECTOR.
- KEY "ON," PROBE CONTROLLER HARNESS CONNECTOR TERMINAL "D" WITH A TEST LIGHT CONNECTED TO GROUND.

ABOVE 1 VOLT

(2) RELAY CONTACTS SHORTED IN CONTROLLER. REPLACE GLOW PLUG CONTROLLER AND ALL GLOW PLUGS.

LIGHT "ON"

- KEY "OFF".
- USING AN OHM METER, MEASURE CONTINUITY BETWEEN HARNESS CONNECTOR TERMINAL "E" AND GROUND.

LIGHT "OFF"

- CHECK FOR OPEN CKT 531. IF OK, SEE COLD ADVANCE SYSTEM ELECTRICAL CHECK CHART.

1 OHM OR LESS

(3)
- USING OHM METER, MEASURE CONTINUITY BETWEEN HARNESS CONNECTOR TERMINALS "C" AND "E".

GREATER THAN 1 OHM

CHECK FOR POOR CONNECTION
OR
OPEN IN CKT 150.

2 OHMS OR LESS

(4)
- RECONNECT CONTROLLER HARNESS CONNECTOR.
- KEY "ON," TOUCH "GLOW PLUG" TERMINAL OF GLOW PLUG CONTROLLER WITH A TEST LIGHT CONNECTED TO GROUND.

GREATER THAN 2 OHM

CHECK FOR POOR CONNECTION OR OPEN IN ORN SIGNAL WIRE BETWEEN CONNECTOR AND GLOW PLUG HARNESS SPLICE.

LIGHT "ON"

(5)
- KEY "OFF" FOR 10 SECONDS.
- KEY "ON."
- WITH A TEST LIGHT CONNECTED TO GROUND, PROBE EACH GLOW PLUG CONNECTOR. LIGHT SHOULD BE "ON" WHEN GLOW PLUG CONTROLLER CYCLES "ON."

LIGHT "OFF"

REPLACE GLOW PLUG CONTROLLER.

LIGHT "ON" ALL GLOW PLUGS

NO TROUBLE FOUND.

LIGHT "OFF" ONE OR MORE

REPAIR OPEN IN GLOW PLUG FEED CIRCUIT(S).

RECONNECT COOLANT SENSOR AND CLEAR CODES.

5-25-90
MS 9728-6E

BLANK

COLD ADVANCE CONTROL SYSTEM

GENERAL DESCRIPTION

PURPOSE

The Cold Advance Control Circuit is designed to advance the injection timing about 4° during cold operation. This circuit is activated by the ECM, through a Cold Advance Control relay to a cold advance solenoid (Figure 6E2-34). The ECM opens the circuit above coolant temperature of 35°C (95°F). Below the switching point, and with key switch "ON," the cold advance solenoid is continuously energized without the engine running. Below the switching point and engine running, the ECM closes the circuit to the Cold Advance solenoid. When the Cold Advance solenoid is energized and the engine is running, the housing pressure is decreased from 69 kPa (10 psi) to zero, which advances the timing 4°.

After the engine begins to warm-up, the Cold Advance solenoid is de-energized and the housing pressure is returned to 69 kPa (10 psi).

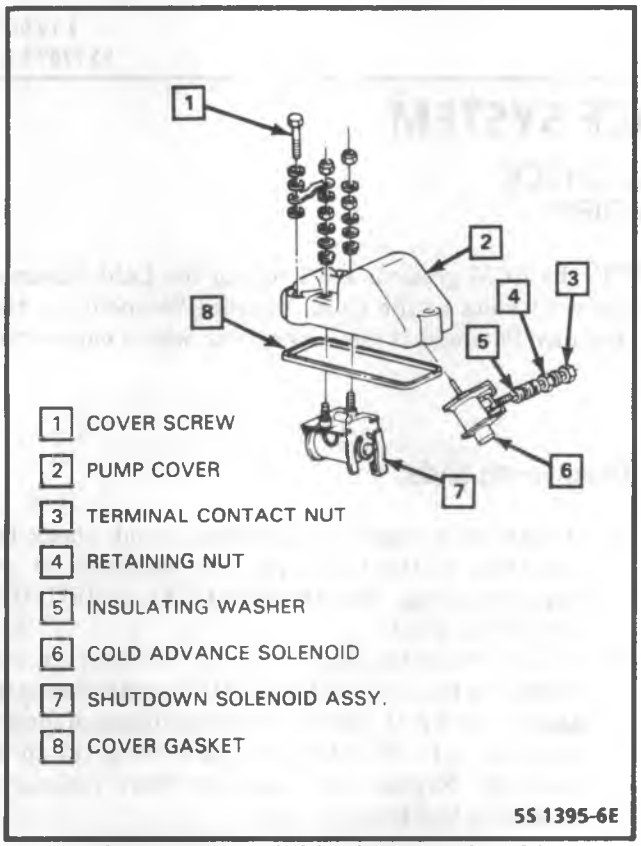

Figure 6E2-34 - Cold Advance Solenoid

DIAGNOSIS

Refer to Cold Advance System Electrical check for checking procedures to diagnose the Cold Advance Control circuit.

ON-VEHICLE SERVICE

COLD ADVANCE CONTROL RELAY

Refer to Figure "6E2-2" for location of the Cold Advance Control relay.

COLD ADVANCE SOLENOID (Figure 6E2-34)

Remove or Disconnect

1. Pump cover - refer to DIESEL FUEL INJECTION (SECTION 6C-2) for removal procedure.
2. Terminal contact nut and retaining nut.
3. Cold Advance Solenoid.

Install or Connect

1. Cold Advance Solenoid, making certain that the plunger is centered, so that it will contact the fitting check ball.
2. Insulating washer, plain washer, and lock washer.
3. Retaining nut - tighten to 1.2 N·m (11 lb. in.).
4. Terminal contact nut and lock washer.
5. Check operation of solenoid, using 12 volt source.
6. Pump cover - follow procedure in DIESEL FUEL INJECTION (SECTION 6C2).

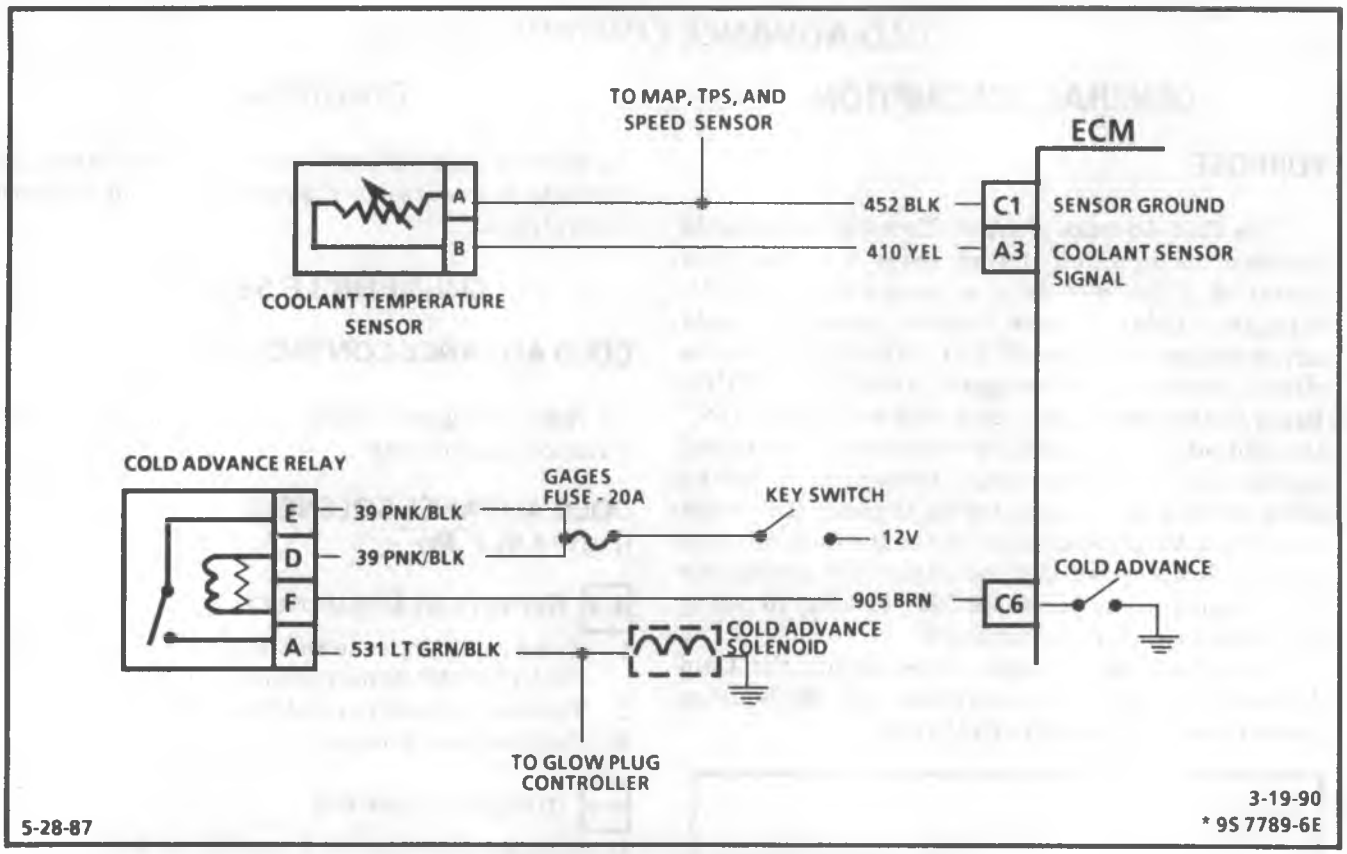

COLD ADVANCE SYSTEM

ELECTRICAL CHECK
6.2L (LH6) DIESEL

Circuit Description:

With the key "ON," and coolant temperature below 80°F, the ECM grounds CKT 905 to the Cold Advance Relay. Grounding CKT 905 turns "ON" the relay, to supply 12 volts to the Cold Advance Solenoid, in the injection pump, and the Glow Plug Controller. The Cold Advance Solenoid is now energized, which causes the injection timing to be advanced approximately 4°.

Test Description: Number(s) below refer to circled number(s) on the diagnostic chart.

1. This step will determine if the problem is electrical or a malfunction inside the injection pump.
2. This step will determine if the ECM is able to turn "ON" the Cold Advance Relay.
3. This step will determine if all factors are available for the cold advance relay to operate.

Diagnostic Aids:

- If there is no electrical problem found, check the operation of the Cold Advance Solenoid in the injection pump. See DIESEL FUEL INJECTION (SECTION 6C2).
- Before replacing ECM, use an ohmmeter and check the resistance of each ECM controlled relay and solenoid coil. See ECM wiring diagram for coil terminal I.D. of solenoid(s) and relay(s) to be checked. Replace any solenoid where resistance measures less than 20 ohms.

COLD ADVANCE SYSTEM

ELECTRICAL CHECK
6.2L (LH6) DIESEL

THIS CHART ASSUMES NO CODE 14 OR 15 IS STORED AND THAT COOLANT SENSOR CIRCUIT IS OPERATING PROPERLY.

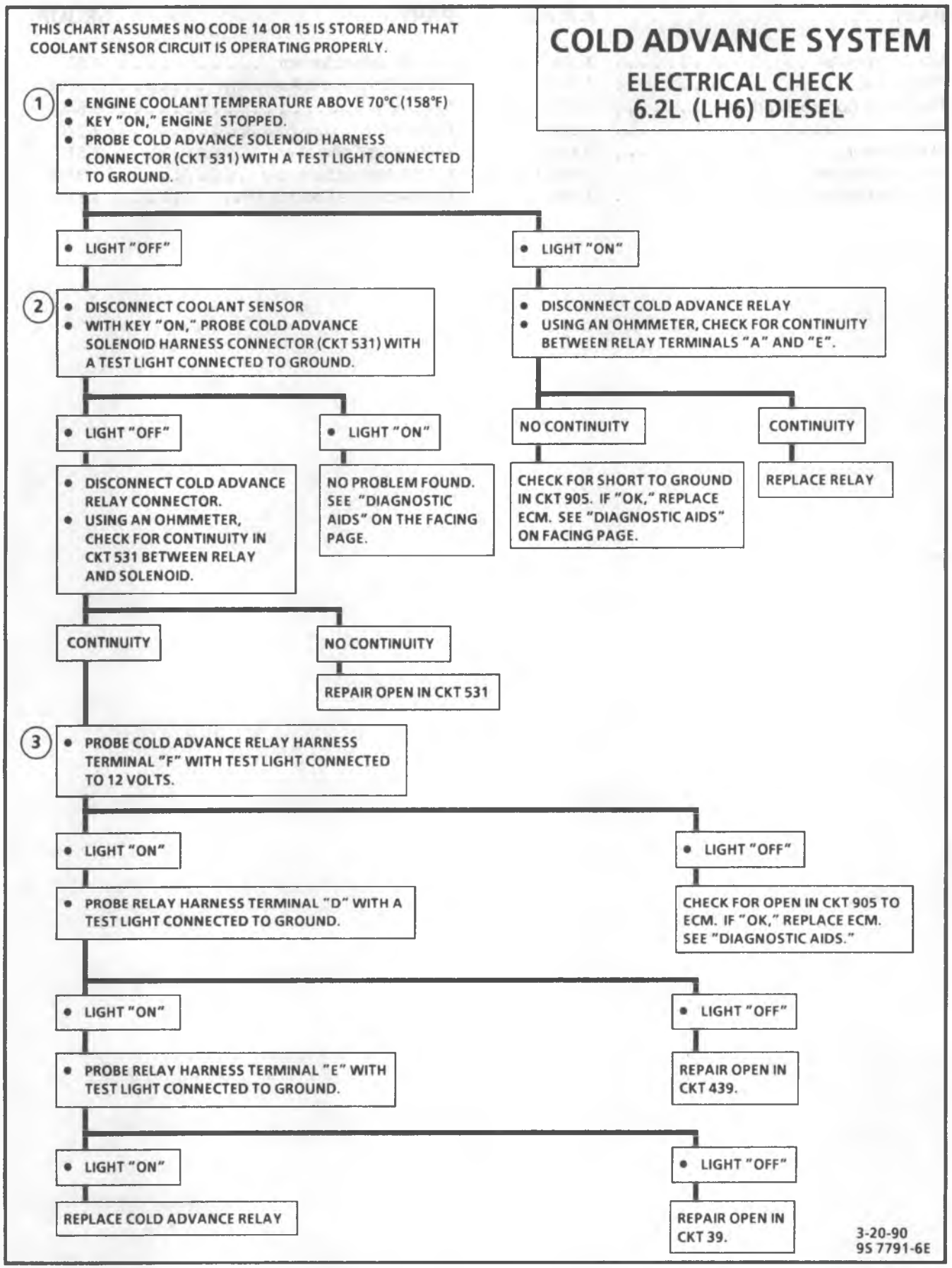

3-20-90
9S 7791-6E

PART	GROUP
Vacuum pump	3.280
CDR Valve	1.745
Electronic Control Module	3.670A
PROM	3.670A
MAP Sensor	3.682B
Coolant Sensor	3.682D
Throttle Position Sensor	3.440

PART	GROUP
Vehicle Speed Sensor	4.337
EGR/EPR Solenoid Assembly	3.670C
EPR Valve	3.640
Glow Plug	2.270
Glow Plug Controller	2.510
Cold Advance Solenoid	3.314
Cold Advance Control Relay	3.314

 HIGH IMPEDANCE MULTIMETER (DIGITAL VOLTMETER-DVM) J 34029-A	**VOLTMETER** - Voltage Position Measures amount of voltage. When connected in parallel to an existing circuit. A digital voltmeter with 10 megohm input impedance is used because some circuits require accurate low voltage readings, and some circuits in the ECM have a very high resistance. **AMMETER** - When used as ammeter, this meter also accurately measures extremely low current flow. Refer to meter instructions for more information. • Selector must be set properly for both function and range. DC is used for most automotive measurements. **OHMMETER** - Measures resistance of circuit directly in ohms. Refer to meter for more information. • OL Display in all ranges indicates open circuit. • Zero display in all ranges indicates a short circuit. • Intermittent connection in circuit may be indicated by digital reading that will not stabilize on circuit. • Range Switch. 200Ω – Reads ohms directly 2K,20K,200KΩ – Reads ohms in thousands 2M and 20MΩ – Reads ohms in millions
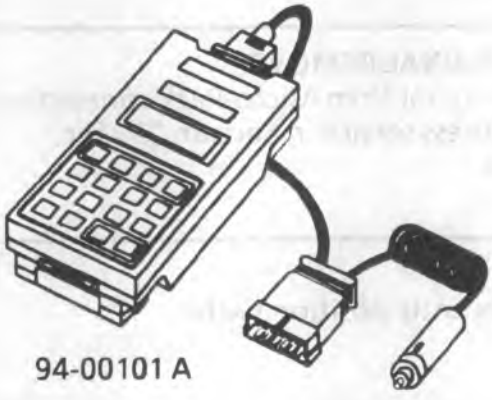 94-00101 A	**TECH 1 DIAGNOSTIC COMPUTER** A hand-held "SCAN" tool used to analyze and diagnose fuel and emission system. Also can be used to analyze other computer system.
 J 34636/BT8405	**CIRCUIT TESTER** Used to check all relays and solenoids before connecting them to a new ECM. Measures the circuit resistance and indicates pass or fail via green or red LED. Amber LED indicates current polarity. Can also be used as a non-powered continuity checker.
 J 35616	**CONNECTOR TEST ADAPTER KIT** Used to make electrical test connections in current Weather Pack, Metri - Pack and Micro-Pack style terminals. 5-24-90 MS 9847-6E

Figure 6E2-35 - Special Tools (1 of 2)

J 23738-A	**VACUUM PUMP (20 IN. HG. MINIMUM)** Use gage to monitor manifold engine vacuum and check vacuum sensors, solenoids and valves.
J 34142-B	**UNPOWERED TEST LIGHT** Used to check wiring for complete circuit and short to ground or voltage.
J 35689-A	**METRI-PACK TERMINAL REMOVER** Used to remove 150 series Metri-Pack "pull-to-seat" terminals from connectors.
J28742-A/BT8234-A	**WEATHER PACK TERMINAL REMOVER** Used to remove terminals from Weather Pack connectors.
J33095/BT8234-A	**ECM CONNECTOR TERMINAL REMOVER** Used to remove terminal from Micro-Pack connectors. Refer to wiring harness service in Section "3" for removal procedure.
J 33043-A	**GAGE BLOCK** Used to calibrate throttle position switch.
J 23951	**MANOMETER** Used to check the crankcase depression regulation (CDR) valve. 5-25-90 9S 5628-6E

Figure 6E2-36 - Special Tools (2 of 2)

SECTION 6F

EXHAUST

NOTICE: When fasteners are removed, always reinstall them at the same location from which they were removed. If a fastener needs to be replaced, use the correct part number fastener for that application. If the correct part number fastener is not available, a fastener of equal size and strength (or stronger) may be used. Fasteners that are not reused, and those requiring thread locking compound will be called out. The correct torque value must be used when installing fasteners that require it. If the above conditions are not followed, parts or system damage could result.

CONTENTS

SUBJECT	PAGE
Description	6F- 1
Diagnosis	6F- 2
On-Vehicle Service	6F- 3
Inspection	6F- 3
Removing Exhaust Parts	6F- 3
Installing Exhaust Parts	6F- 3
Catalytic Converter Replacement	6F-13
Specifications	6F-15

DESCRIPTION

Exhaust system designs will vary according to model designation and intended use of the vehicle. All vehicles include exhaust systems as standard equipment.

The exhaust system uses a ball joint coupling to secure the exhaust pipe to the engine manifold. The ball joint will allow angular movement for alignment purposes. The other connections use a slip joint coupling design with a clamp and U-bolt.

The exhaust system is suspended by hangers attached to the frame members. This will permit some movement of the exhaust system, but should not permit the transfer of noise and vibration into the vehicle.

Heat shields are used to protect both the vehicle and the environment from the high temperatures developed from the exhaust system, especially the catalytic converter.

The catalytic converter is an emission control device added to the gasoline engine exhaust system to reduce hydrocarbon and carbon monoxide pollutants from the exhaust gas stream. The converter contains beads which are coated with a catalytic material containing platinum and palladium. The catalytic converter for the computer command control emission system will also contain rhodium to reduce the level of nitrogen oxides. The catalyst in the converter is not servicable.

THE CATALYTIC CONVERTER REQUIRES THE USE OF UNLEADED FUEL ONLY

The diesel engine does not use a catalyic converter and uses only diesel fuel.

Refer to figures 1 through 14 for component replacement of the engine exhaust system.

DIAGNOSIS

Exhaust system performance complaints, such as excessive back pressure, are noticeable by their effect on engine performance. However, other malfunctioning vehicle components have similar effects on engine performance and are characterized by the same symptoms of complaints. Therefore, it is necessary to refer to the engine diagnosis procedure when attempting to diagnose this type of problem.

PROBLEM	POSSIBLE CAUSE	CORRECTION
Vibrating or Rattling From Exhaust System	Loose and/or misaligned components.	Align, then tighten connections. Check for damaged hanger or mounting brackets and clamps.
Restricted Exhaust System	1. "Kinked" exhaust tubing. 2. Restriction within the muffler. Refer to "Restricted Exhaust System Check" in FUEL, DRIVEABILITY AND EMISSIONS MANUAL, if using X-9132 or the rear of this manual if using ST330-91. 3. End of tail pipe obstruction. 4. Plugged catalytic converter (may result from serious engine malfunction). Refer to "Restricted Exhaust System Check" in the FUEL, DRIVEABILITY AND EMISSIONS MANUAL, if using X-9132 or the rear of this manual if using ST330-91.	1. If possible, repair the damaged condition, otherwise replace the component. 2. If restriction is suspected, remove the muffler and visually check it. Replace muffler if condition is doubtful. 3. Remove the obstruction, or if end is crimped, straighten outlet. 4. Replace the catalytic converter.
Exhaust Leakage and/ or Noise	1. Leakage at exhaust component joints and couplings. 2. Improperly installed or misaligned. 3. Exhaust manifold cracked or broken. 4. Leak between exhaust manifold and cylinder head. 5. Damaged or worn seals or packing. 6. Burned or rusted out exhaust pipe heat tube extension. 7. Burned or rusted out exhaust pipe. 8. Burned or blown out muffler. 9. Broken or loose clamps and/or brackets.	1. Tighten clamps or couplings to specified torque. 2. Align, then tighten connections. 3. Replace the manifold. 4. Tighten the manifold to cylinder head nuts and bolts to specifications. 5. Replace the seals or packing as necessary. 6. Replace the heat tube extensions as required. 7. Replace the exhaust pipe. 8. Replace the muffler assembly. 9. Repair or replace as necessary.

GMTB-3190-2A

ON-VEHICLE SERVICE

INSPECTION

Inspect exhaust pipes, catalytic converters (if equipped), mufflers and tailpipes for cracked joints, broken welds and corrosion damage that would result in a leaking exhaust system. Inspect the clamps, brackets and insulators for cracks and stripped or corroded bolt threads.

The exhaust system, including heat shields, must be free of leaks, binding, grounding and excessive vibration. These conditions are usually caused by damaged or loose flange bolts, heat shields, brackets or pipes. If any of these conditions exist, check the exhaust system components and alignment. Align and replace as necessary.

REMOVING EXHAUST PARTS

CAUTION: Always wear protective goggles and gloves when removing exhaust parts as falling rust and sharp edges from worn exhaust components could result in serious personal injury. When removing exhaust components, an accumulation of dirt and corrosion can make the work difficult. Using a penetrating oil on the threads of U-bolts can assist in the removal of these components.

INSTALLING EXHAUST PARTS

NOTICE: Replacement of exhaust system parts MUST be OEM standard to ensure that the vehicle operates as designed.

When installing a new exhaust pipe or muffler and tailpipe, on any model, check for proper alignment. Rattles and noise vibrations in the exhaust system are usually caused by misalignment of parts. When aligning the system, leave all bolts or nuts loose until all parts are properly aligned, then tighten, working from the front to the rear.

Exhaust system hangers, hanger brackets, and clamps which are damaged should be replaced to maintain exhaust system alignment.

Important

- When jacking or lifting the vehicle from the frame side rails, be certain lift pads do not contact the catalytic converter as damage to the converter will result.
- When servicing of exhaust system requires removing and replacing the oxygen sensor, refer to "Oxygen Sensor Service" in the FUEL, DRIVEABILITY and EMISSIONS MANUAL if using X-9132 or to the rear of this manual if using ST330-91.
- Sealer 9985020 or equivalent is to be applied to all slip joint connections.
- When replacing a muffler, the tailpipe should also be replaced.
- When installing the exhaust pipe to the engine manifold, always use new packings and nuts. Clean the engine manifold stud threads with a wire brush before installing the new nuts.

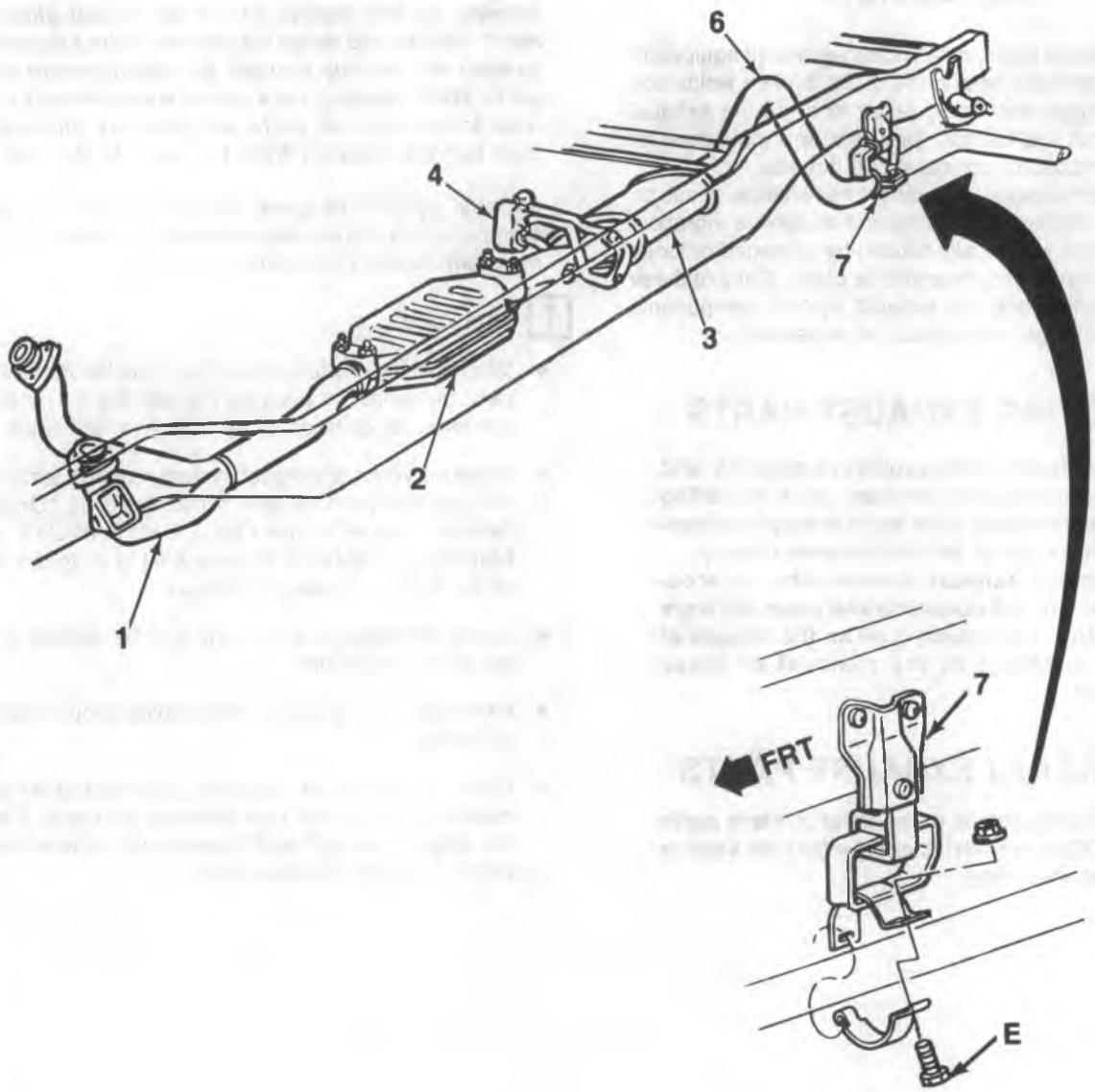

E. 30 N·m (22 ft. Lbs.)
1. Exhaust Pipe
2. Catalytic Converter
3. Muffler
4. Front Hanger
6. Tailpipe
7. Tailpipe Hanger

V0240

Figure 1—Exhaust System and Hangers R/V 1 & 2 Models 5.7L, Single

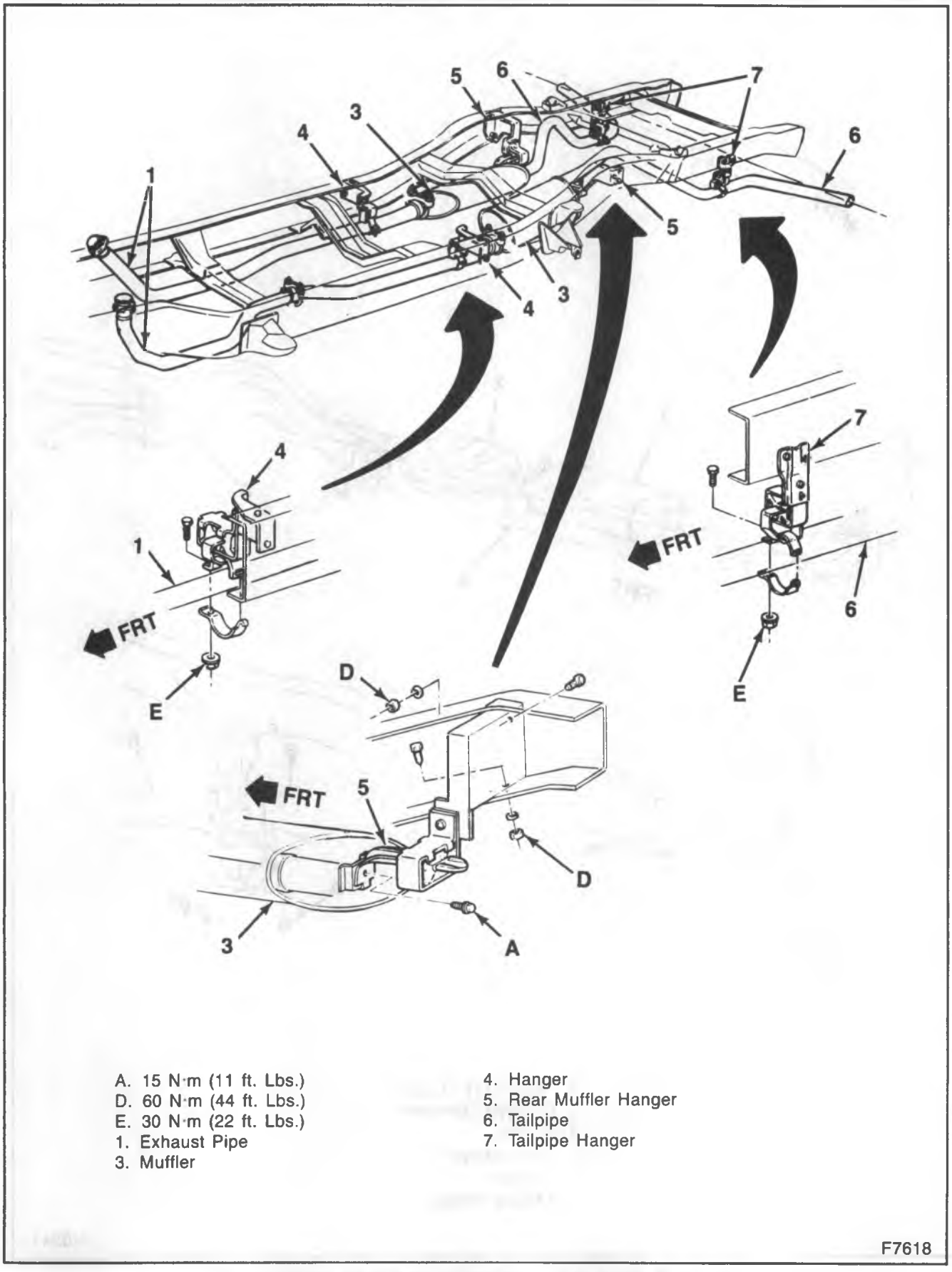

A. 15 N·m (11 ft. Lbs.)
D. 60 N·m (44 ft. Lbs.)
E. 30 N·m (22 ft. Lbs.)
1. Exhaust Pipe
3. Muffler
4. Hanger
5. Rear Muffler Hanger
6. Tailpipe
7. Tailpipe Hanger

Figure 2—Exhaust System and Hangers R/V3 Model 6.2L Diesel, Dual

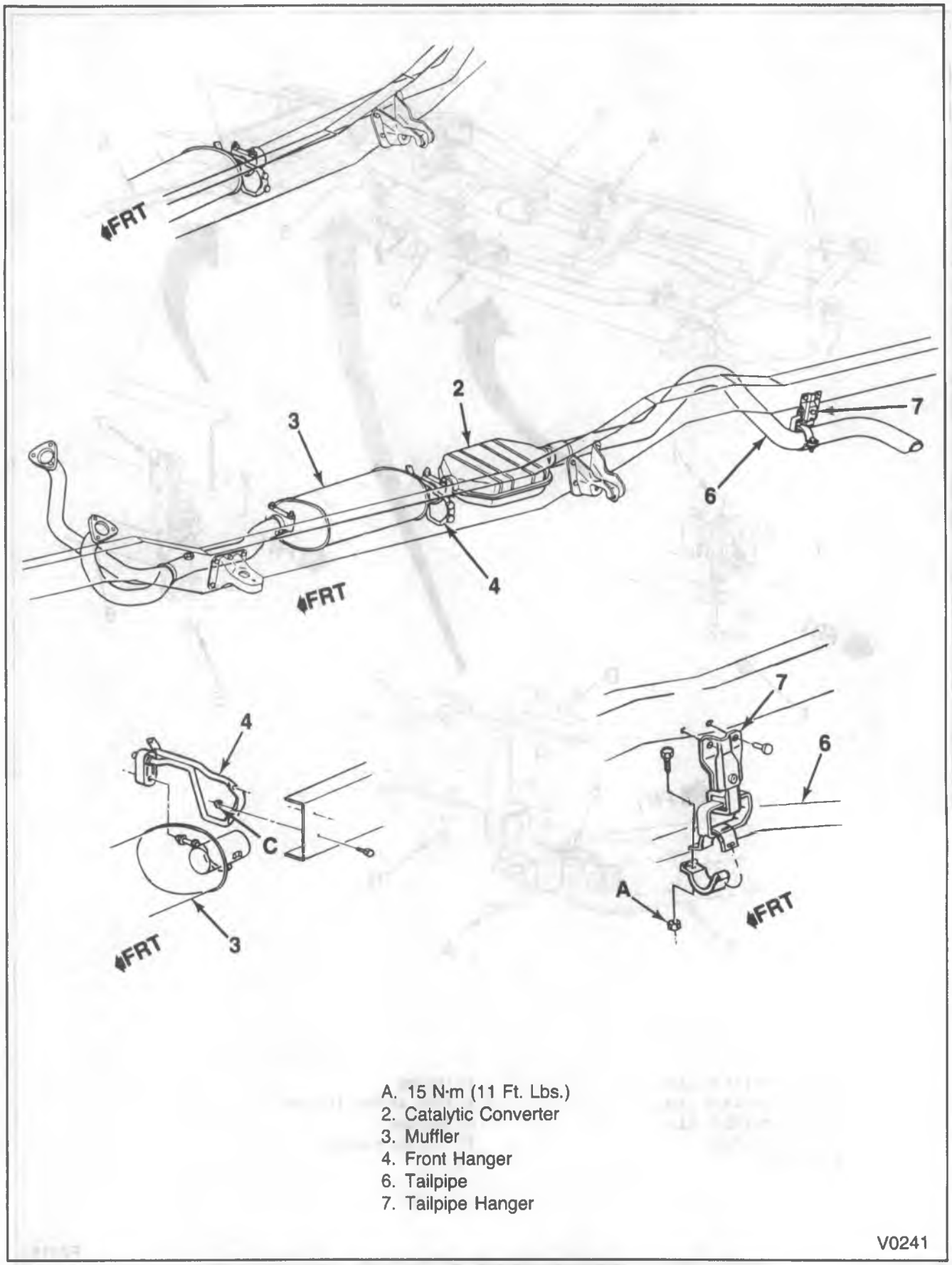

Figure 3—Exhaust System and Hangers R/V2 7.4L, Single

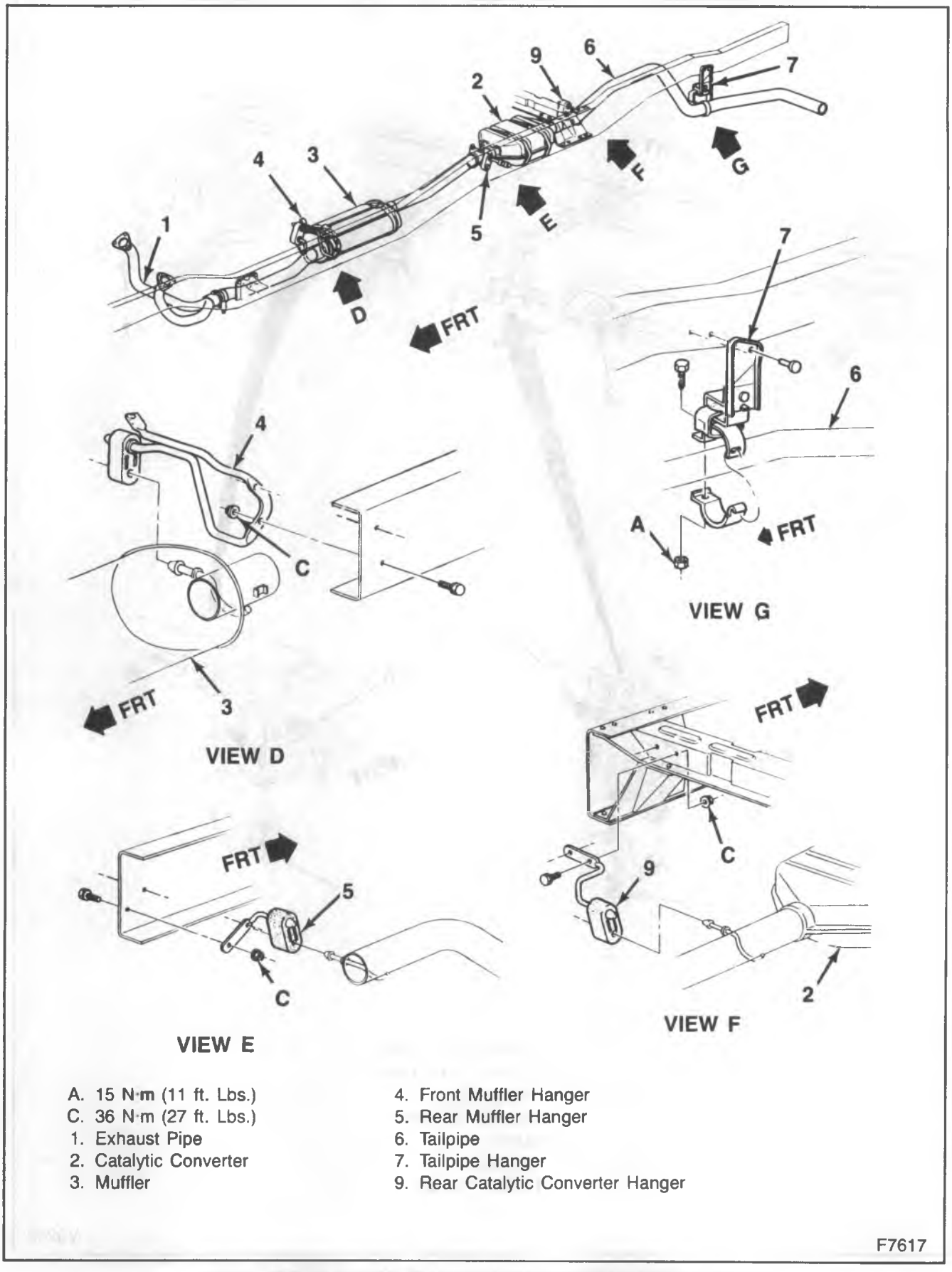

A. 15 N·m (11 ft. Lbs.)
C. 36 N·m (27 ft. Lbs.)
1. Exhaust Pipe
2. Catalytic Converter
3. Muffler
4. Front Muffler Hanger
5. Rear Muffler Hanger
6. Tailpipe
7. Tailpipe Hanger
9. Rear Catalytic Converter Hanger

F7617

Figure 4—Exhaust System and Hangers R/V3 Model 7.4L, Single

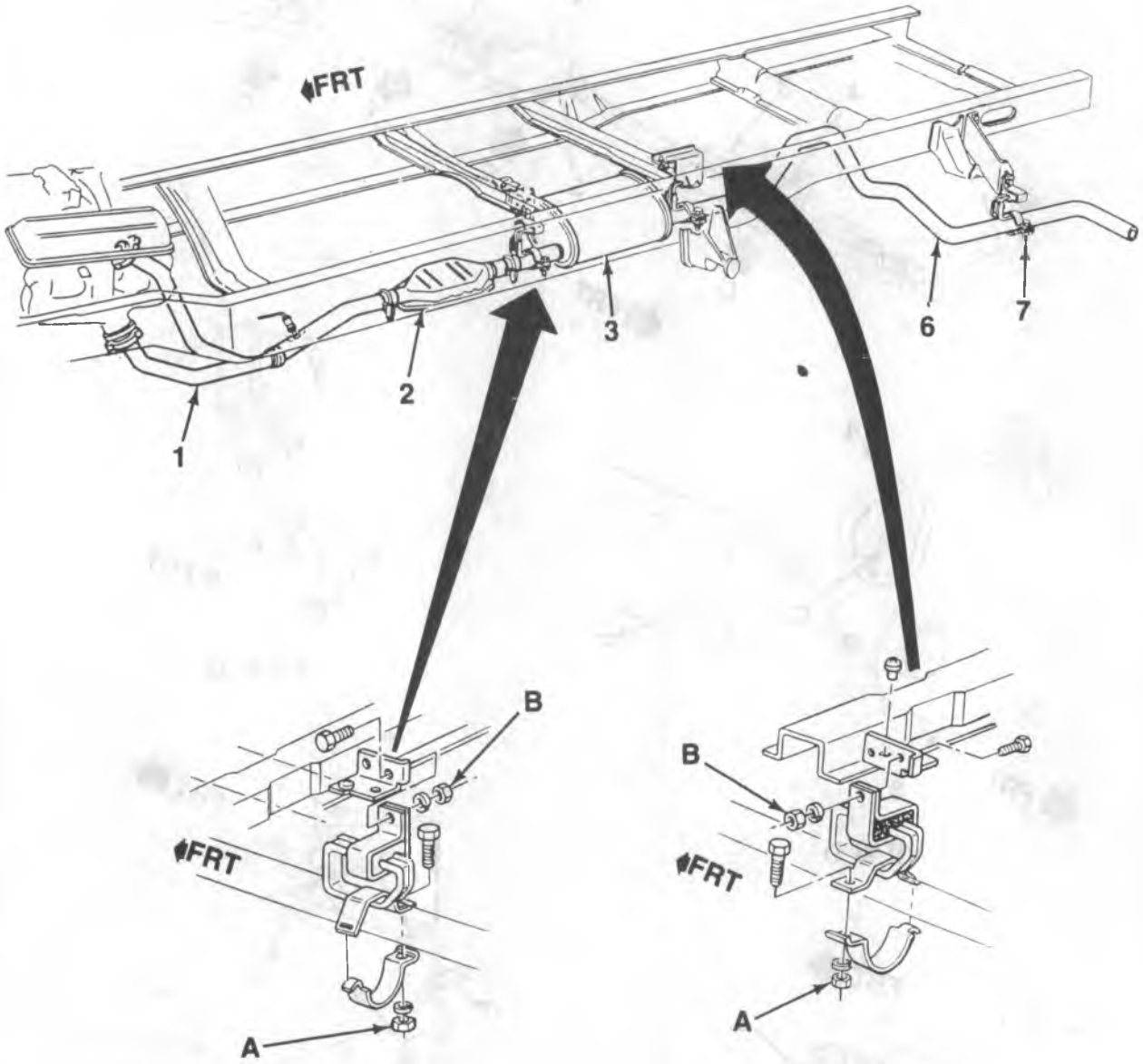

A. 15 N·m (11 Ft. Lbs.)
B. 37 N·m (27 Ft. Lbs.)
1. Exhaust Pipe
2. Catalytic Converter
3. Muffler
6. Tailpipe
7. Tailpipe Hanger

V0242

Figure 5—Exhaust System and Hangers P Model 4.3L, 5.7L, Single

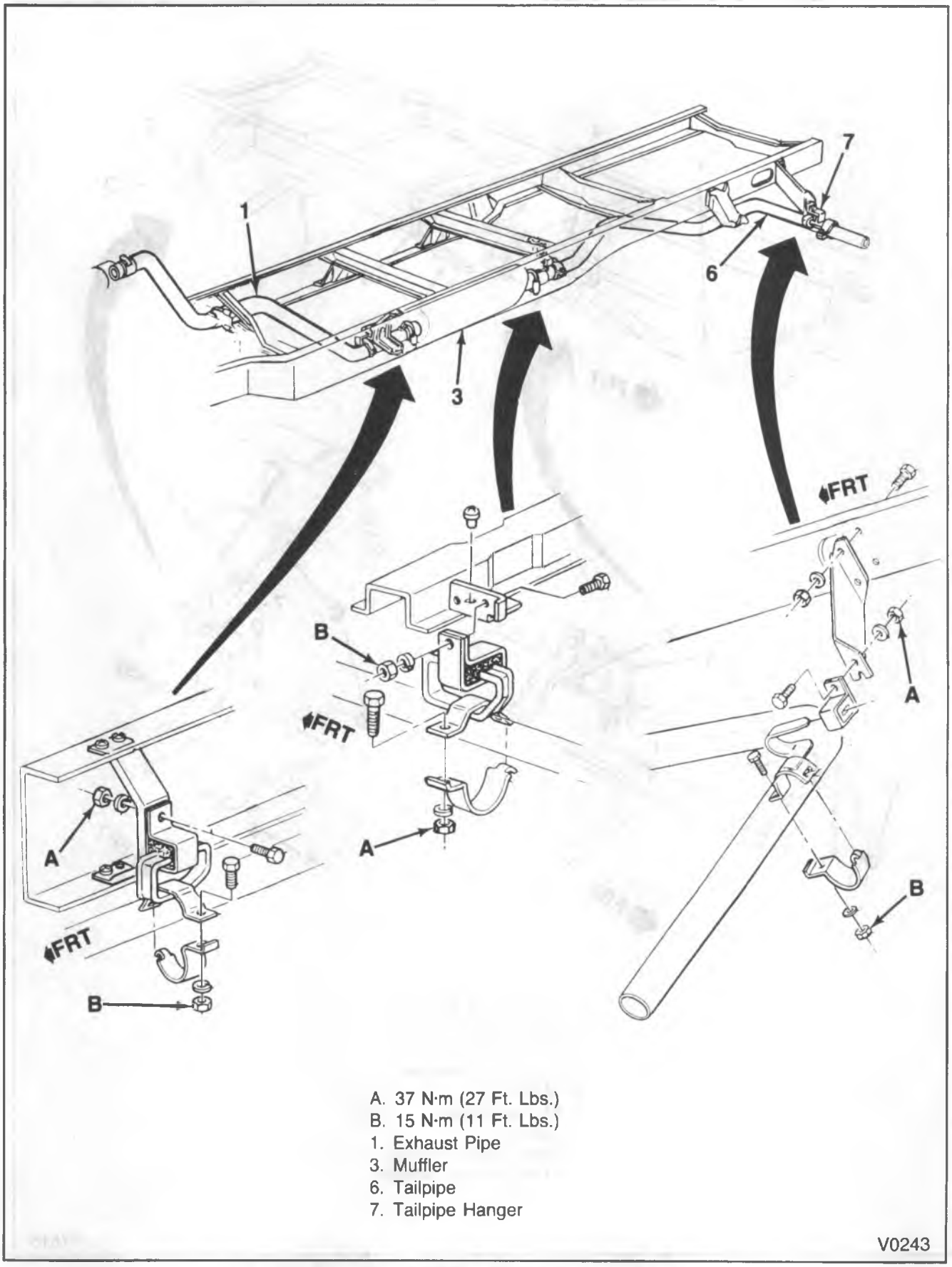

Figure 6—Exhaust System and Hanger P Model 4.3L, Single

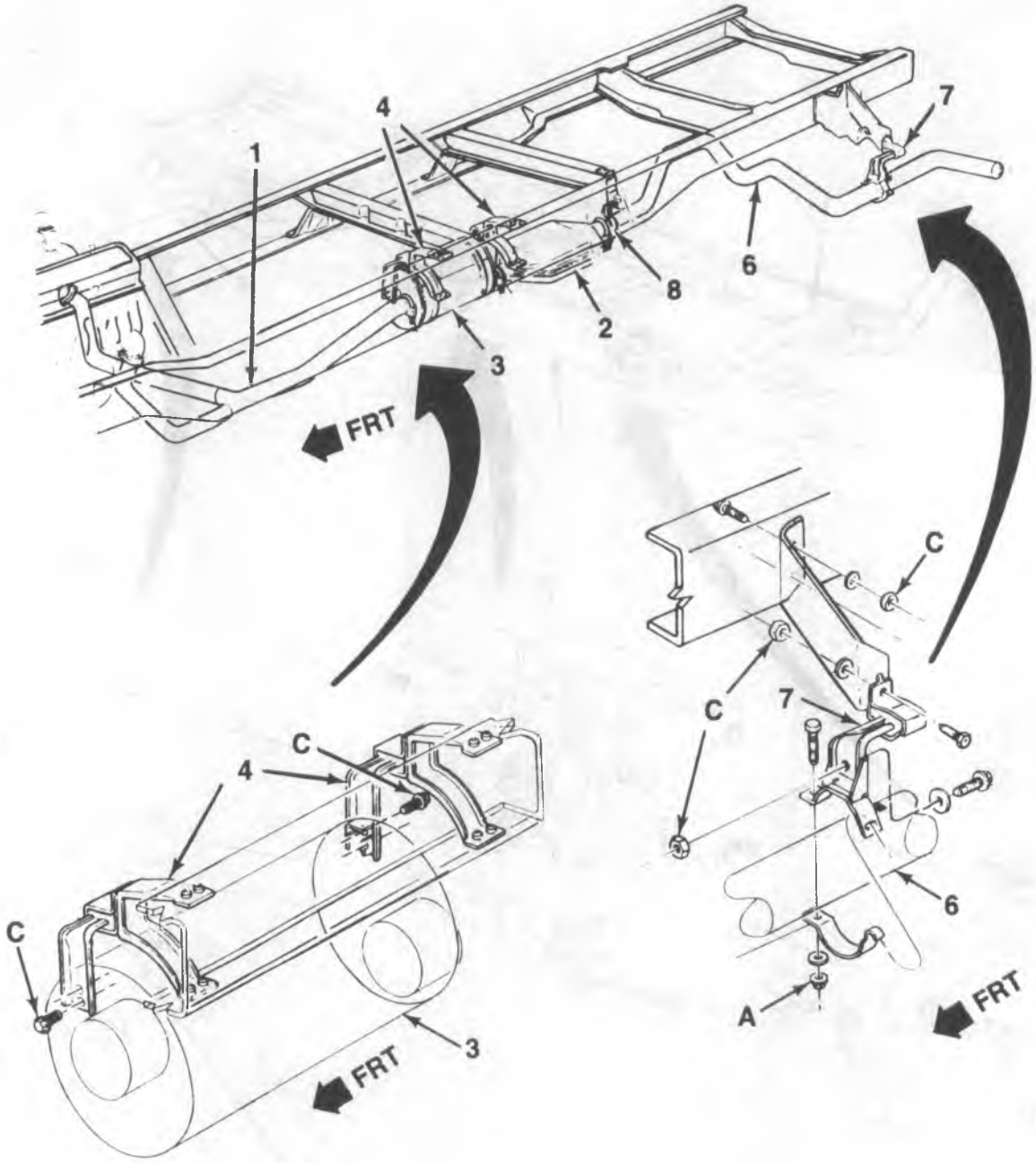

A. 15 N·m (11 ft. Lbs.)
C. 36 N·m (27 ft. Lbs.)
1. Exhaust Pipe
2. Catalytic Converter
3. Muffler
4. Muffler Hanger
6. Tailpipe
7. Rear Tailpipe Hanger
8. Front Tailpipe Hanger

F7615

Figure 7—Exhaust System and Hangers P Model 7.4L, Single

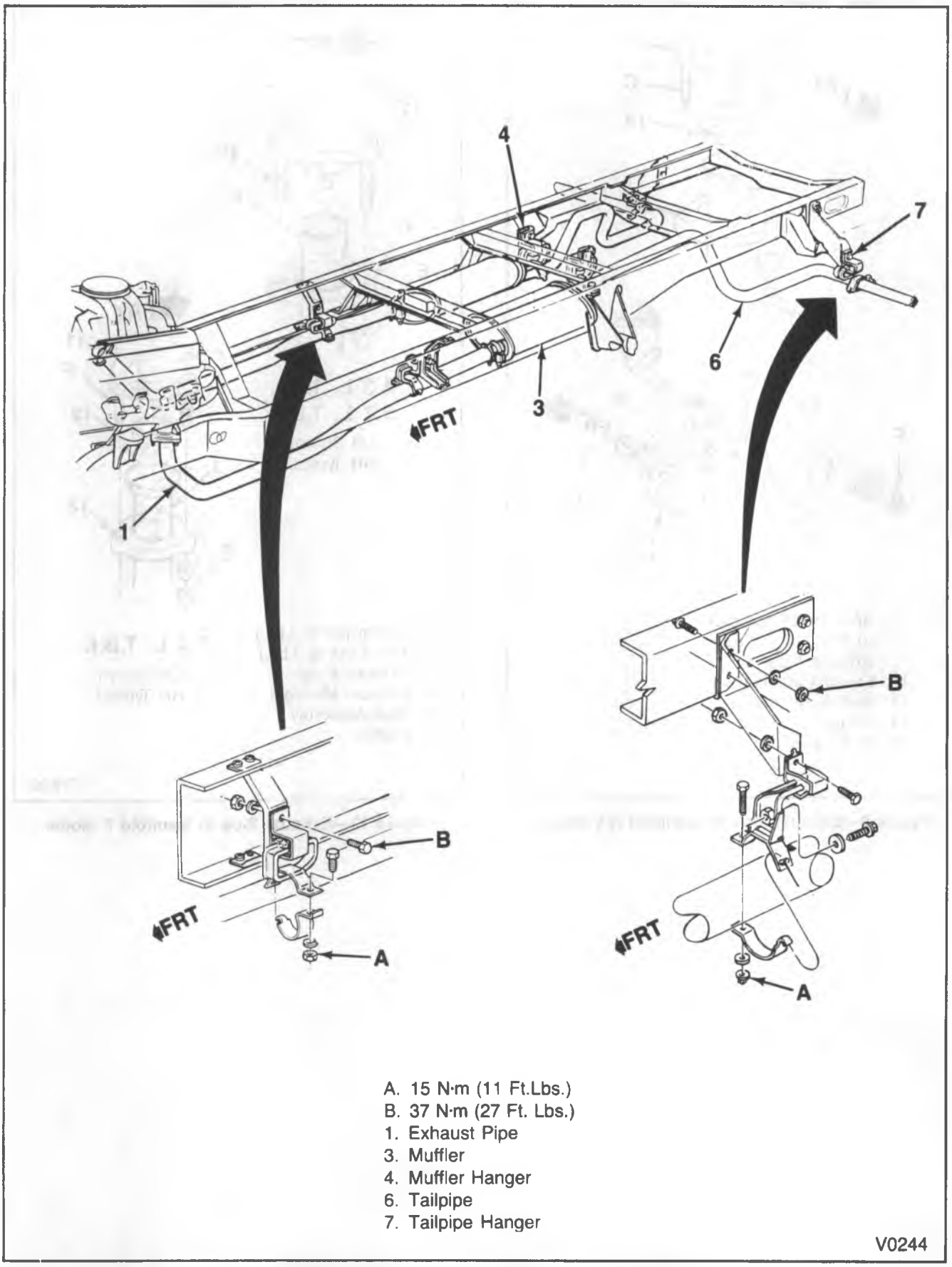

Figure 8—Exhaust System and Hangers P Models 6.2L, Dual

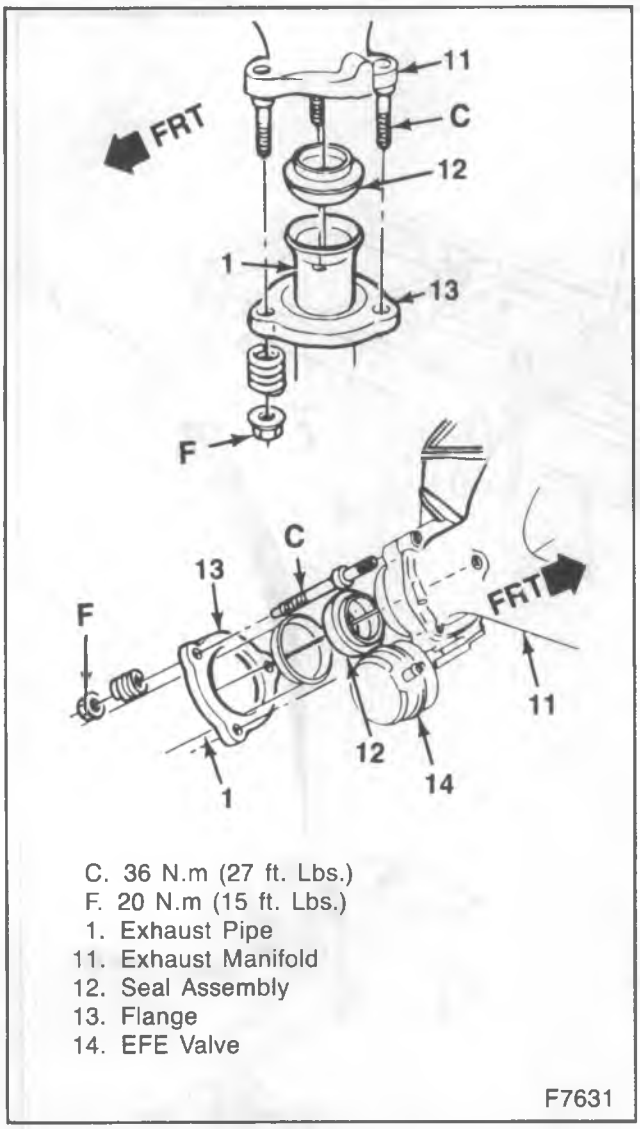

Figure 9—Exhaust Pipe to Manifold R/V Model

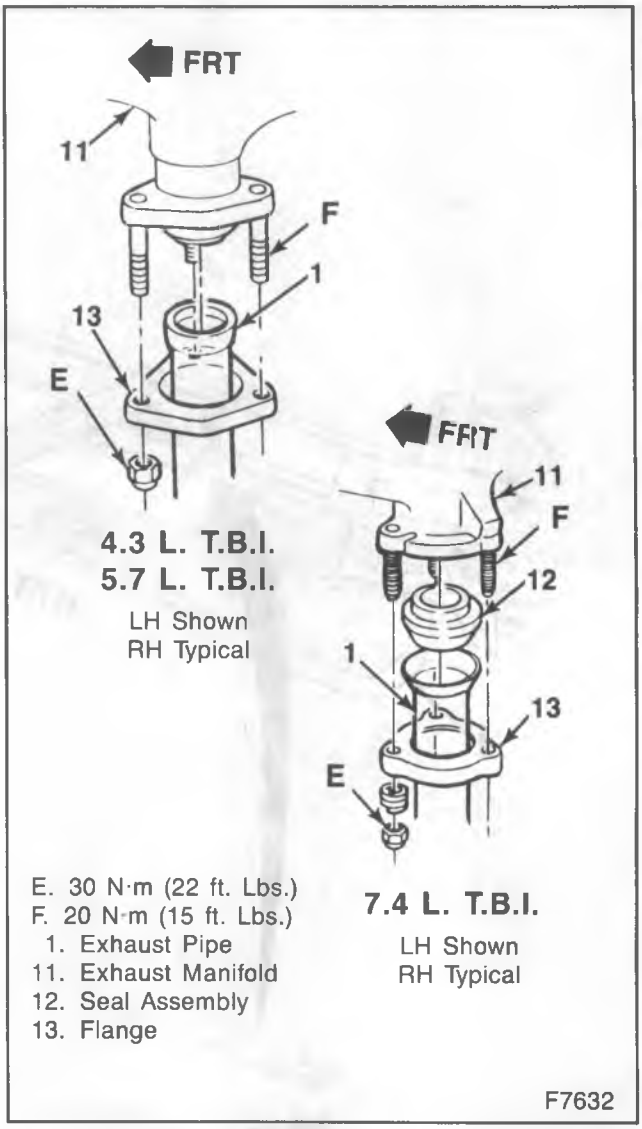

Figure 10—Exhaust Pipe to Manifold P Model

CATALYTIC CONVERTER REPLACEMENT

Remove or Disconnect (Figure 11)

- Raise the vehicle on a hoist.

1. Clamps at the front and rear of the converter.
2. Converter pipe-to-front-exhaust pipe.
3. Converter pipe-to-rear-exhaust pipe.

Install or Connect (Figure 11)

- Apply sealer 9985020 or equivalent at the slip joint connection.

1. New catalytic converter into the front exhaust pipe.
2. Converter pipe to rear exhaust pipe.

NOTICE: See "Notice" on page 6F-1 of this section.

3. New U-bolts and clamps at the front and rear of the converter.

- Check for clearance and alignment.

Tighten

- Clamps and support to 48 N•m (35 ft. lbs.)
- Lower the vehicle.

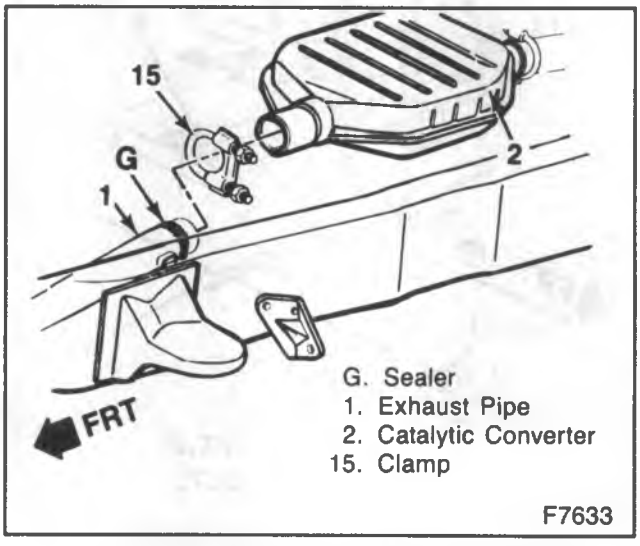

Figure 11—Catalytic Converter Clamping

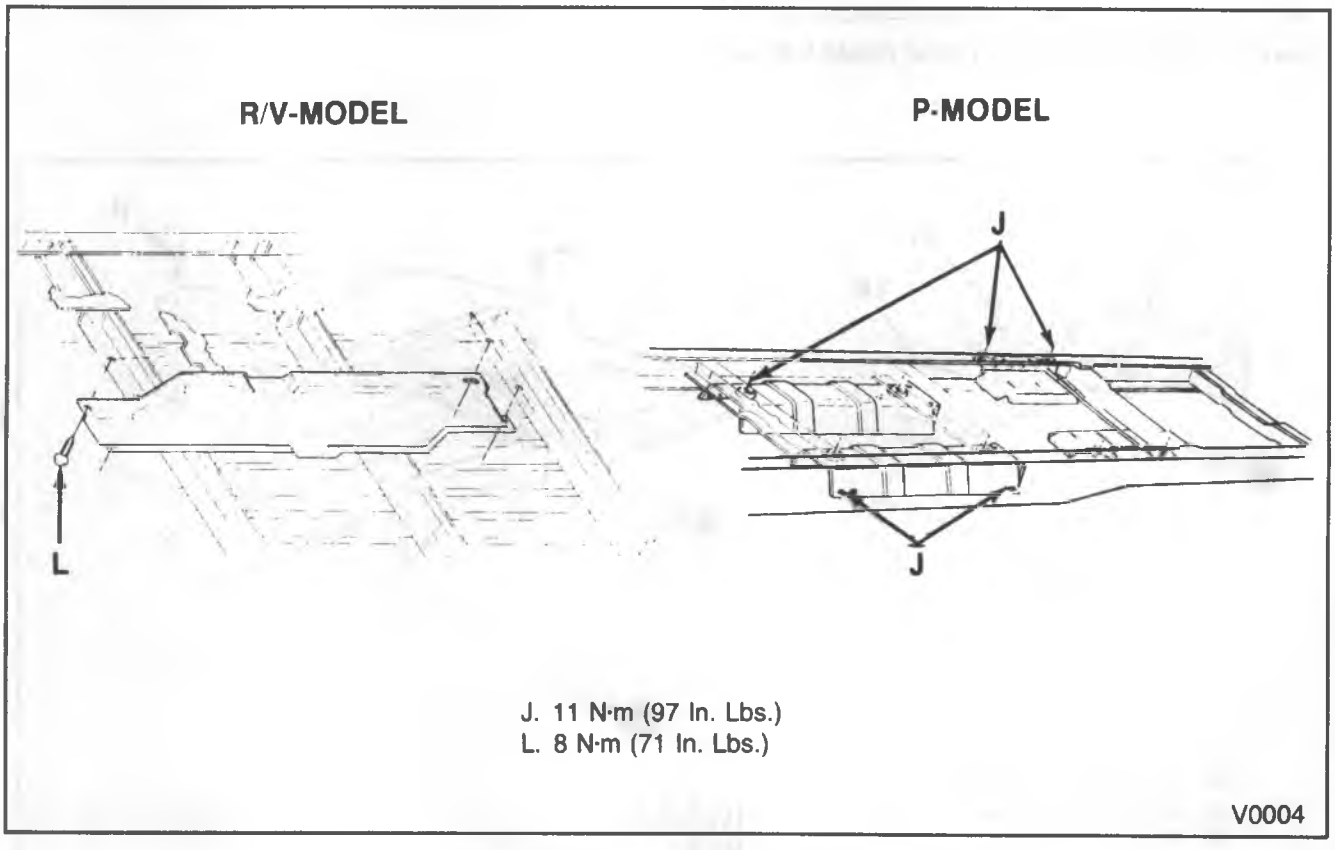

Figure 12—Exhaust Heat Shields

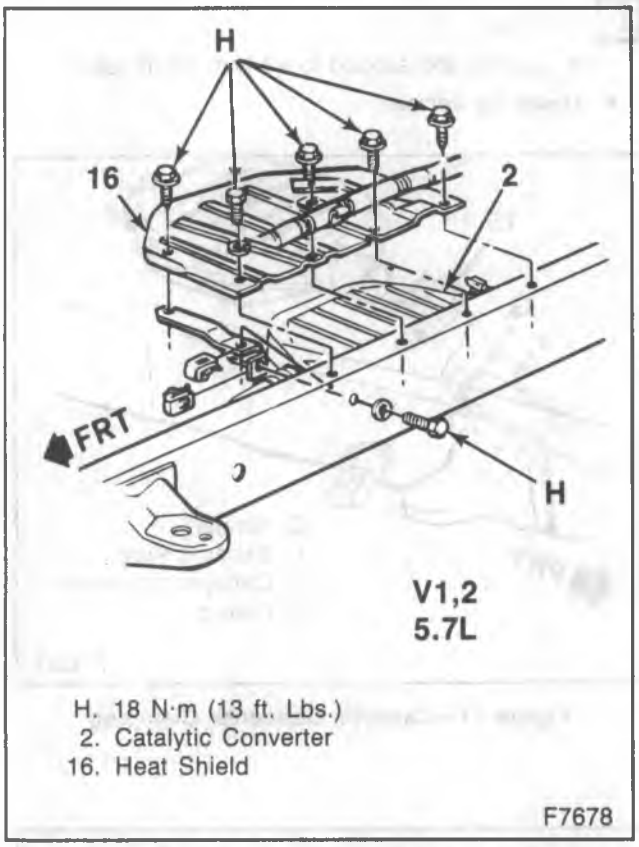

Figure 13—Catalytic Converter Heat Shield V-Model

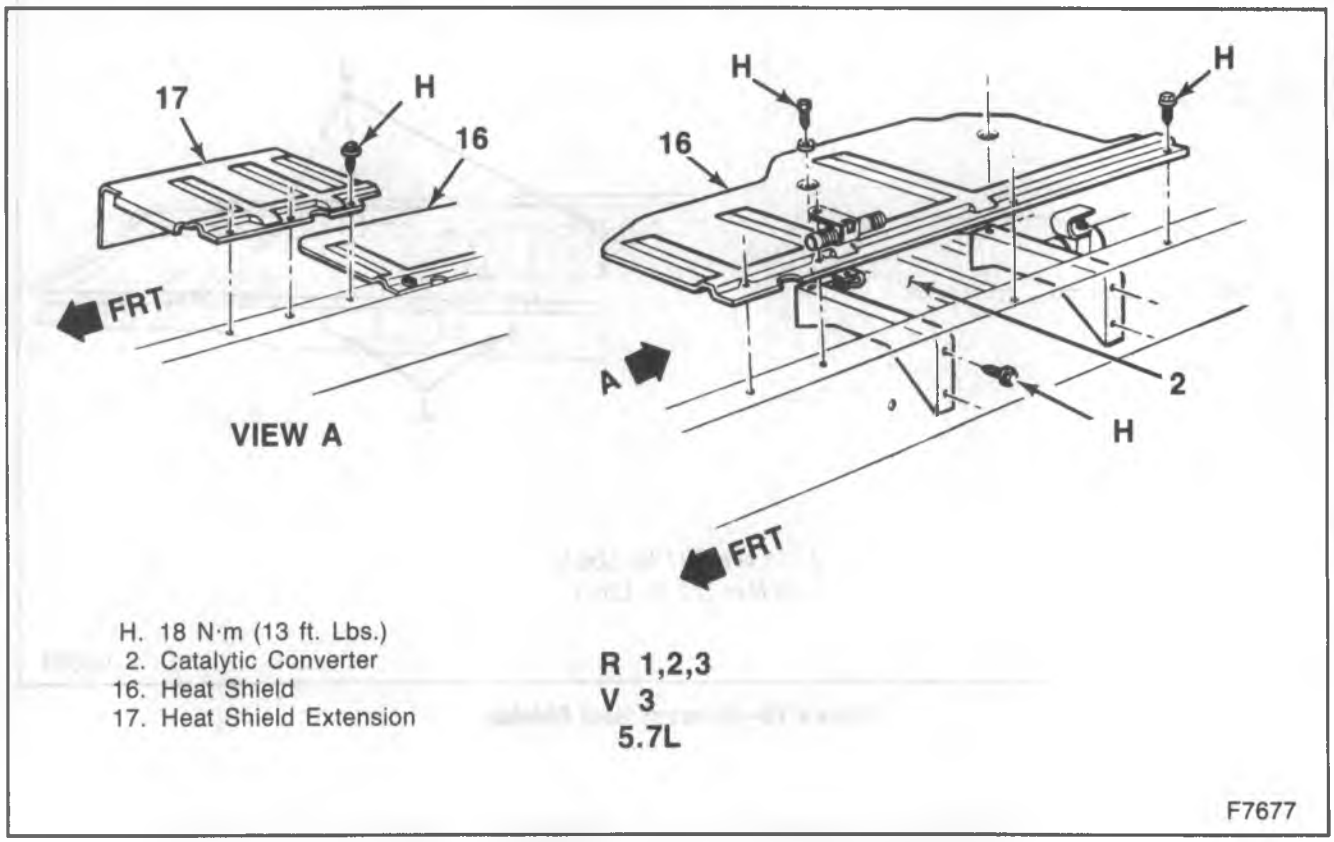

Figure 14—Catalytic Converter Heat Shield R-V Models

SPECIFICATIONS

FASTENER TORQUE

	N•m	Ft. Lbs.
Exhaust Pipe to Manifold (4.3L, 5.7L, 6.2L Diesel)	20	15
Exhaust Pipe to Manifold (7.4L)	34	25
Exhaust Pipe Hanger Clamp (R/V Model)	30	22
Exhaust Pipe Hanger Clamp (P-Model)	15	11
Exhaust Pipe Hanger Bracket to Frame (R/V Model)	60	44
Exhaust Pipe Hanger Bracket to Frame (P-Model)	36	27
Exhaust Pipe Extension Hanger to Bracket (P-Model)	36	27
Exhaust Pipe U-Bolt	48	35
Exhaust Pipe U-Bolt (P-Model, 7.4L)	60	44
Catalytic Converter U-Bolt	48	35
Muffler Hanger Clamp	15	11
Muffler Hanger Clamp (R/V Model, 5.7L)	60	44
Muffler Hanger to Frame (R/V Model)	60	44
Tail Pipe Hanger Clamp (R/V Model)	30	22
Tail Pipe Hanger to Frame (R/V Model)	36	27
Catalytic Converter Hanger to Frame (R/V Model, 7.4L)	36	27
Catalytic Converter Heat Shield	18	13
Exhaust Heat Shields (R/V Model)	8	71*
Exhaust Heat Shields (P-Model)	11	97*

*Inch Lbs.

GMTB-3003-2A

PARTS INFORMATION

PART NAME	GROUP
Catalytic Converter	3.685
Muffler	3.701
Clamp	3.708
Hanger Bracket	3.704
Hanger	3.704/3.706
Exhaust Manifold Stud	3.613
Exhaust Pipe Strap	3.708
Hanger Support Bracket, Tailpipe Bracket	3.706
Exhaust Heat Shield	3.602
Exhaust Manifold Pipe Seal	3.611
Hanger Support	3.706
Exhaust Pipe Spring	3.613
Stud Nut (Manifold)	8.917

GMTB-3187-2A

SECTION 6H

VACUUM PUMPS

NOTICE: When fasteners are removed, always reinstall them at the same location from which they were removed. If a fastener needs to be replaced, use the correct part number fastener for that application. If the correct part number fastener is not available, a fastener of equal size and strength (or stronger) may be used. Fasteners that are not reused, and those requiring thread locking compound will be called out. The correct torque value must be used when installing fasteners that require it. If the above conditions are not followed, parts or system damage could result.

CONTENTS

SUBJECT	PAGE
Description	6H-1
Belt Driven Vacuum Pump	6H-1
Gear Driven Vacuum Pump	6H-1
Diagnosis	6H-1
On-Vehicle Service	6H-4
Belt Driven Pump Replacement	6H-4
Gear Driven Pump Replacement	6H-5
Specifications	6H-6
Special Tools	6H-6

DESCRIPTION

A vacuum pump is mounted on the 6.2L diesel engine and provides vacuum for operating emission controls, transmission modulator (M40 only), cruise control, and heater doors. It may be belt driven or gear driven. The gear driven model has a speed sensor permanently mounted to it. The pump is a diaphragm pump which does not require periodic maintenance.

BELT DRIVEN VACUUM PUMP

The belt driven pump, used on the P model, is bracket mounted at the right front of the engine. It has a pulley attached which is driven by the generator belt. With the exception of the pulley, the vacuum pump is replaced as an assembly.

GEAR DRIVEN VACUUM PUMP

The gear driven pump, used on R/V models, is mounted at the top rear of the engine. It is driven by a cam inside the drive assembly to which it mounts. The drive housing assembly has a drive gear on the lower end which meshes with the camshaft gear in the engine. The drive gear causes the cam in the drive housing to rotate. The drive gear also powers the engine oil lubricating pump.

There is a permanently attached speed sensor mounted on top of the vacuum pump shaft. Should the sensor need replacing, the entire pump must be replaced. For description and diagnosis of the speed sensor, refer to DIESEL EMISSIONS (SEC. 6E2) in this manual.

DIAGNOSIS

Refer to figures 1 and 2 for diagnosis of the vacuum pump.

AUTOMATIC TRANSMISSION (VACUUM MODULATED) WILL NOT SHIFT OUT OF FIRST (LOW) GEAR. BLOCK WHEELS, APPLY PARKING BRAKE AND PLACE TRANSMISSION SELECTOR LEVER IN "PARK" OR "NEUTRAL" BEFORE STARTING ENGINE.

STEP 1

SEE "VACUUM PUMP DIAGNOSIS" ILLUSTRATION BELOW.
CONNECT VACUUM GAGE TO VACUUM PUMP INLET. WHERE APPLICABLE, DISCONNECT OUTLET HOSE FROM OUTLET TUBE ON PUMP AND PLUG END OF HOSE. DO NOT PLUG VACUUM PUMP OUTLET TUBE. WITH ENGINE IDLING, VACUUM SHOULD REACH — 70 kPa (21" Hg) MINIMUM AT SEA LEVEL WITHIN 30 SECONDS (REFER TO GRAPH FOR VACUUM AT OTHER ELEVATIONS).

CHECKS OKAY. LEAK IN SYSTEM OTHER THAN VACUUM PUMP

GO TO STEP 2

LOW VACUUM OR FLUCTUATING GAGE READING

1. CHECK GAGE AND CONNECTIONS FOR LEAKS.
2. IF BELT DRIVEN, CHECK BELT TENSION AND PULLEY FIT TO SHAFT.
3. CHECK IDLE RPM.

RECHECK VACUUM GAGE

VACUUM O K

GO TO STEP 2

LOW VACUUM REPLACE PUMP

GO TO STEP 1

VACUUM PUMP DIAGNOSIS

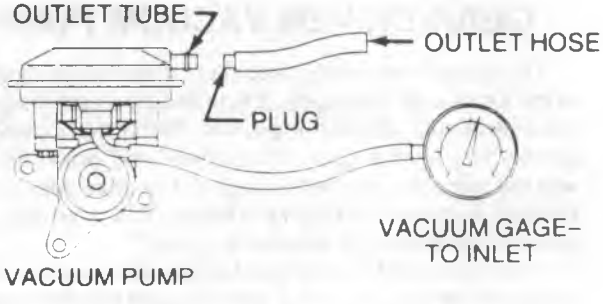

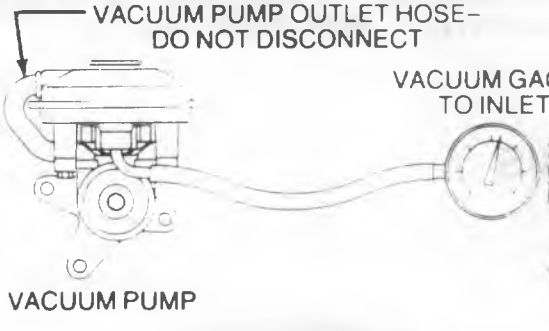

VACUUM PUMP USED ON SOME MODELS

MINIMUM ACCEPTABLE vs ALTITUDE

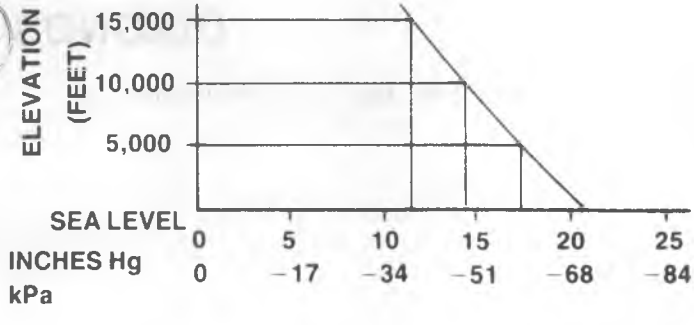

Rev 4/88

F6474

Figure 1—Diagnosis of Vacuum Pump

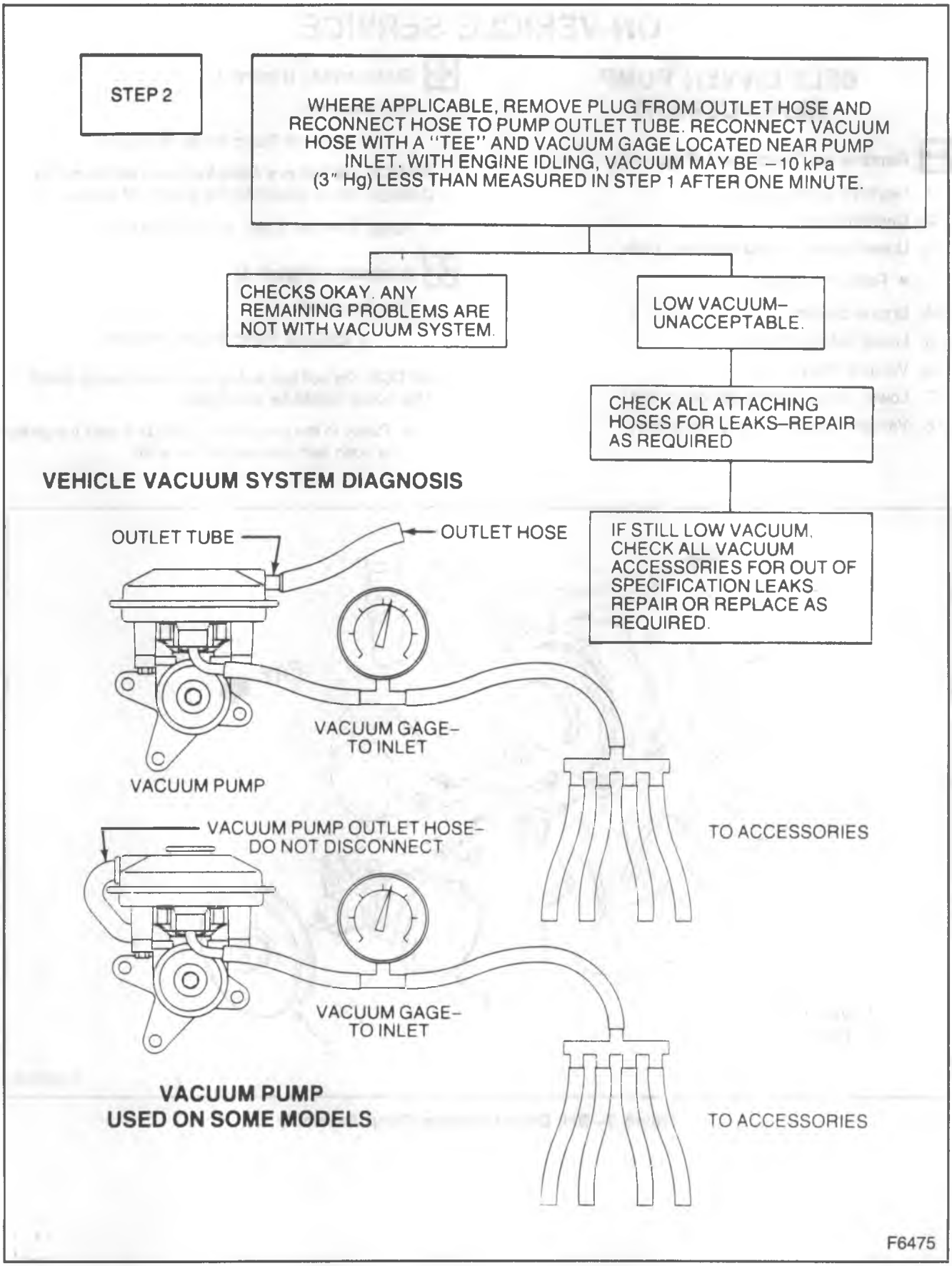

Figure 2—Diagnosis of Vacuum Pump

ON-VEHICLE SERVICE

BELT DRIVEN PUMP REPLACEMENT

Remove or Disconnect (Figure 3)

1. Negative battery cable.
2. Generator belt.
3. Upper vacuum pump attaching bolts.
   - Raise the vehicle.
4. Engine coolant.
5. Lower radiator hose.
6. Vacuum hose.
7. Lower vacuum pump attaching bolt.
8. Vacuum pump including the pulley.

Disassemble (Figure 4)

Tool Required:

J 25034-B Pump Pulley Remover

NOTICE: Do not pry from the back of the pulley. Damage could occur to the pulley or pump.

- Pulley from the pump with J 25034-B.

Assemble (Figure 5)

Tool Required:

J 25033-B Pump Pulley Installer

NOTICE: Do not tap pulley back onto pump shaft. The pump could be damaged.

- Pulley to the pump with J 25033-B until the pulley is flush with the end of the shaft.

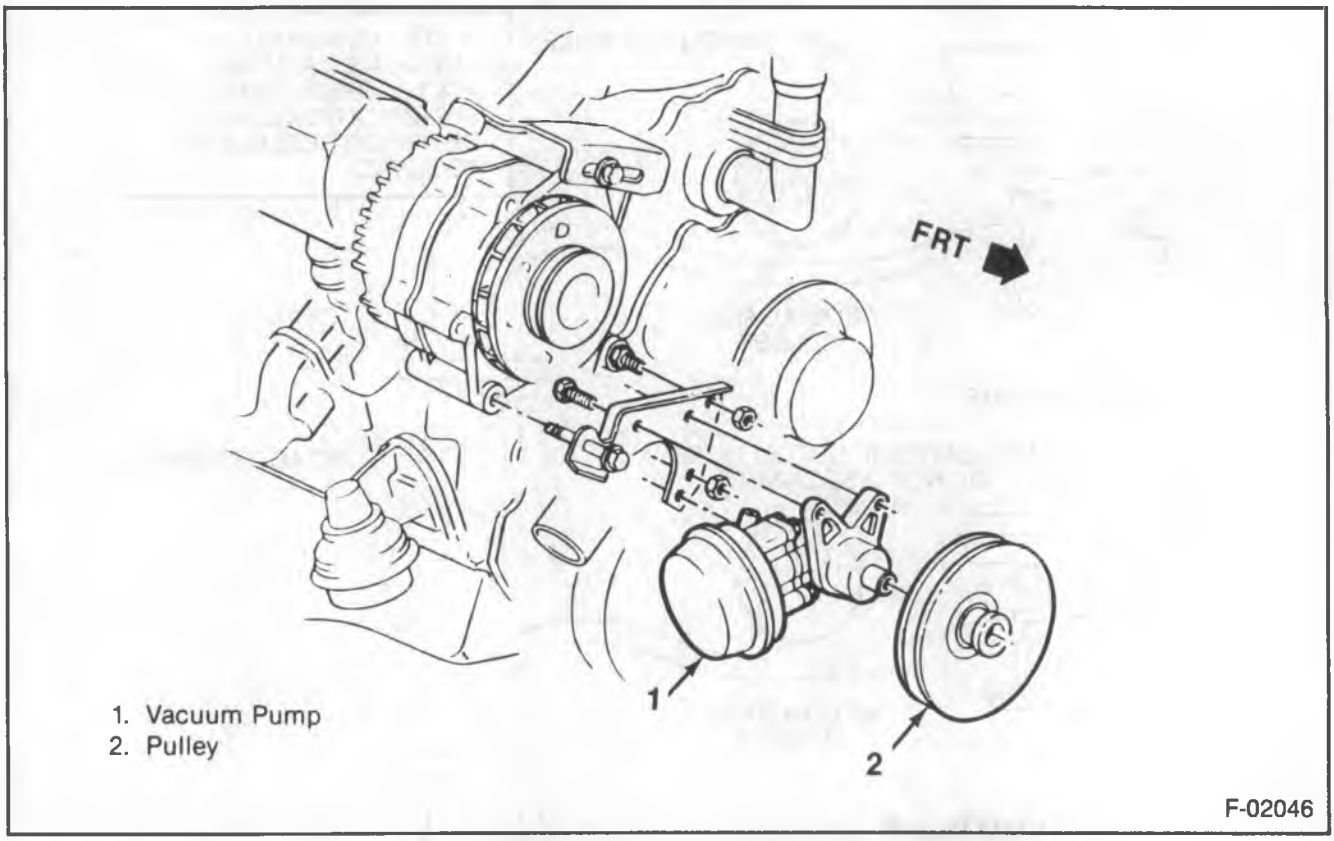

Figure 3—Belt Driven Vacuum Pump Assembly

Install or Connect (Figure 3)

1. Vacuum pump assembly to the engine.
2. Vacuum pump lower attaching bolt.

Tighten

- Bolts to 27 N•m (20 ft. lbs.)

3. Vacuum hose.
4. Bottom radiator hose.
   - Lower the vehicle.
5. Upper vacuum pump attaching bolts.
6. Generator belt and tighten it.
   - Refer to ENGINE COOLING (SEC. 6B1) for belt specifications.
7. Battery cable.
8. Engine coolant.

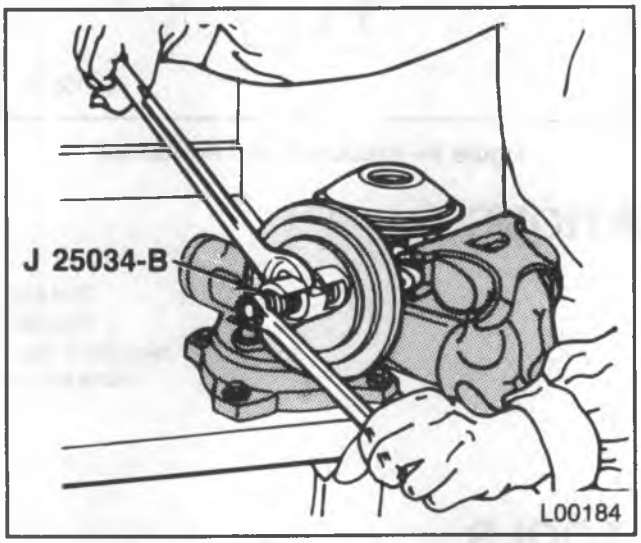

Figure 4—Removing the Pulley

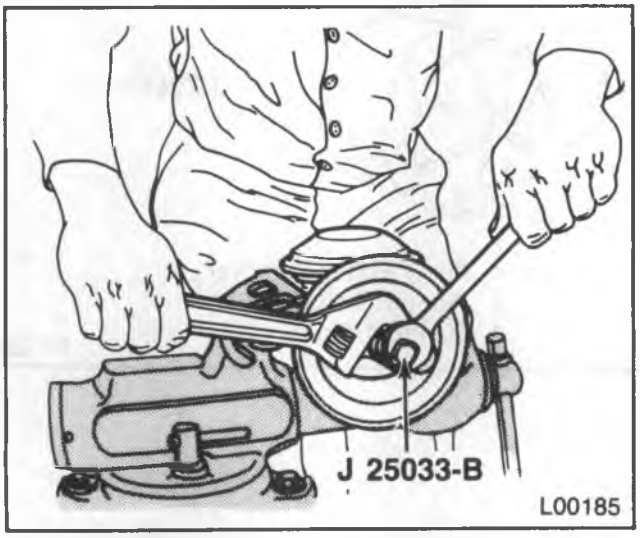

Figure 5—Installing the Pulley

GEAR DRIVEN PUMP REPLACEMENT

Remove or Disconnect (Figure 6)

Tool Required:

J 29664 Manifold Cover Set

1. Air cleaner.

Important

- Cover the air intake with J 29664 to prevent foreign material from falling into the manifold (figure 7).

2. Vacuum hose from the pump inlet.
3. Speed sensor connector.
4. Bolt and bracket holding the drive assembly to the engine block.
5. Pump and drive assembly.

NOTICE: Do not run the engine without the vacuum pump installed. Since the oil pump is powered by the vacuum pump drive gear, no oil would circulate through the engine. The engine could be damaged.

Inspect

- Gasket on the pump assembly. Replace if necessary.

Install or Connect (Figure 6)

1. New pump assembly making sure that the gear on the drive assembly meshes with the gear on the engine camshaft.

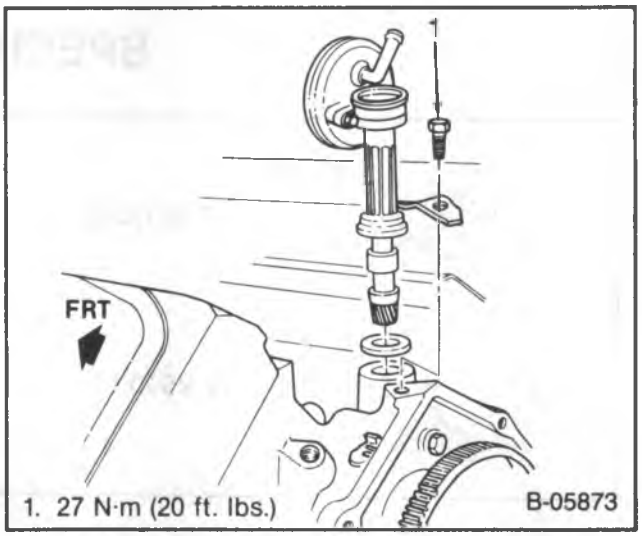

Figure 6—Gear Driven Vacuum Pump Assembly

Adjust (Figure 8)

- Rotate the pump so the inlet tube faces the front of the engine.
- Pump should be on a 20-degree angle.

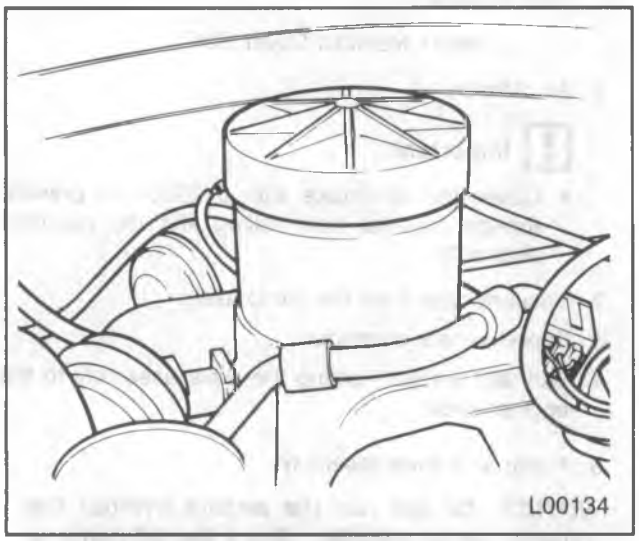

Figure 7—Manifold Cover, Installed

2. Bolt and bracket.

Tighten

- Bolt to 27 N•m (20 ft. lbs.)

3. Vacuum hose to the inlet port.
4. Speed sensor connector.
5. Air cleaner.
   - Remove J 29664 from the air cleaner inlet (figure 7).
   - Install the air cleaner.

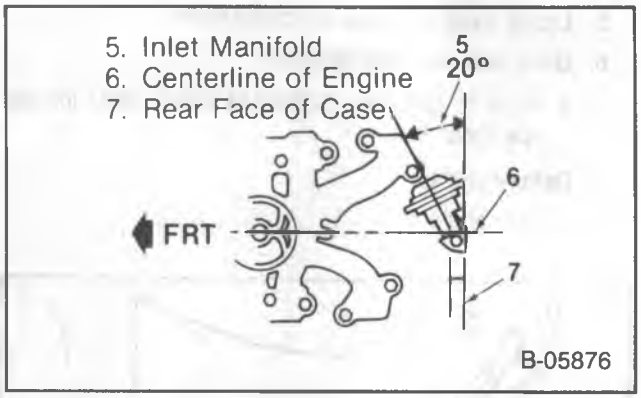

Figure 8—Vacuum Pump Positioned

SPECIFICATIONS

Vacuum Pump (P)	7841746
Vacuum Pump (R/V)	7839581
Pump Mounting Bolts	27 N•m (20 ft. lbs.)

GMTB-3021-2A

SPECIAL TOOLS

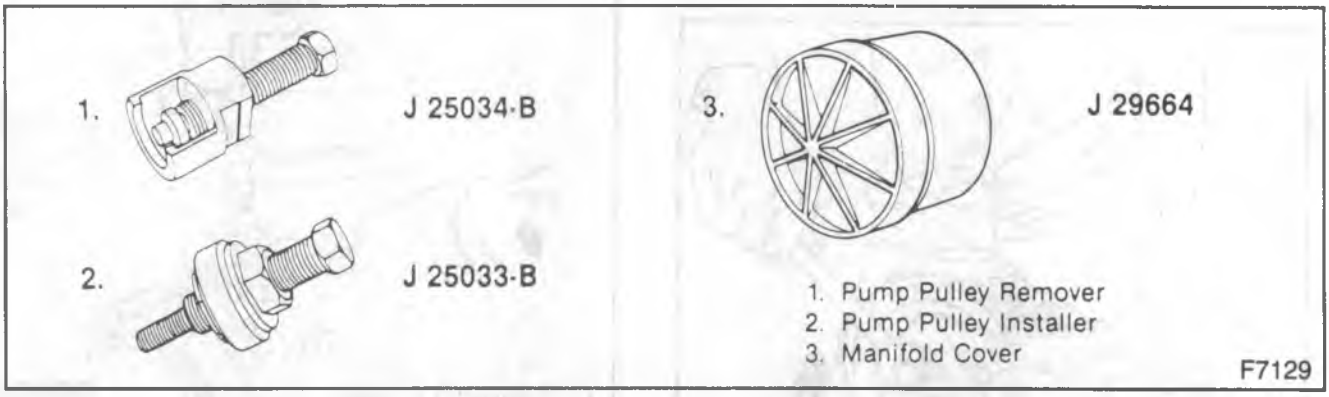

SECTION 7

TRANSMISSION

CONTENTS

SUBJECT	PAGE
Automatic Transmission	7A-1
4L60 Automatic Transmission	7A1-1
4L80E Automatic Transmission	7A2-1
Electronic Transmission Controls	7A4-1
Manual Transmission	7B-1
Clutch	7C-1
Transfer Case	7D-1

SECTION 7A

AUTOMATIC TRANSMISSION

CONTENTS

SUBJECT	PAGE
Transmission Identification Information	7A-1
Transmission Definitions	7A-1
Preliminary Checking Procedure	7A-3
Noise and Vibration Analysis	7A-3
Transmission Fluid Level Information	7A-4
Transmission Fluid Checking Procedure	7A-4

TRANSMISSION IDENTIFICATION INFORMATION

A 4L80E automatic transmission has a metal identification nameplate attached to the case exterior. The 4L60 transmission has the identification information stamped into the case pan rail (figure 1). This information will assist in the servicing and determination of replacement parts when ordered through a GM parts catalog.

Additional transmission identification is provided on the Service Parts Identification label (figure 2). This label contains information on the regular production options (RPO) as well as standard and mandatory options. This label is affixed to the inside of each vehicle at the assembly plant. Refer to GENERAL INFORMATION (SEC. OA) for label location and additional information.

TRANSMISSION DEFINITIONS

The following definitions are being provided to establish a common language and assist the user in describing transmission related conditions. Some of these terms or conditions are used in 4L60 (Sec. 7A1) and 4L80E (Sec. 7A2).

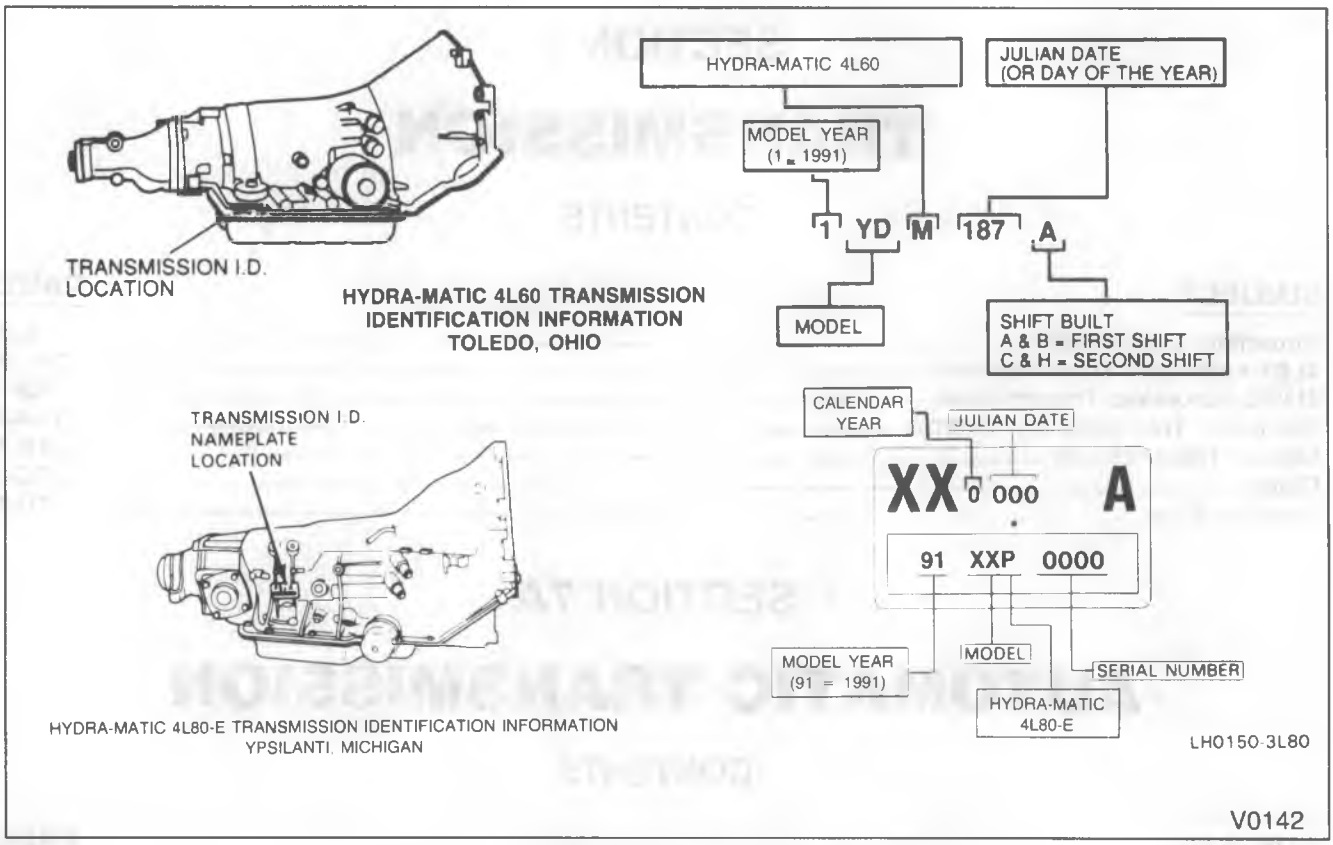

Figure 1 – Transmission Identification Information

THROTTLE POSITIONS

- Minimum Throttle – the least amount of throttle opening required for an upshift.
- Light Throttle – approximately 1/4 of accelerator pedal travel.
- Medium Throttle – approximately 1/2 of the accelerator pedal travel.
- Heavy Throttle – approximately 3/4 of the accelerator pedal travel.
- Wide Open Throttle (WOT) – full travel of the accelerator pedal.
- Full Throttle Detent Downshift – a quick apply of the accelerator pedal to its full travel, forcing a downshift.
- Zero Throttle Coastdown – a full release of the accelerator pedal while the vehicle is in motion and in drive range.
- Engine Braking – a condition where the engine is used to slow the vehicle by manually downshifting during a zero throttle coastdown.

SHIFT CONDITIONS

- Bump – a sudden and forceful apply of a clutch or band.
- Chuggle – a bucking or jerking condition that may be engine related. May be most noticeable when the converter clutch is engaged. Similar to the feel of towing a trailer.

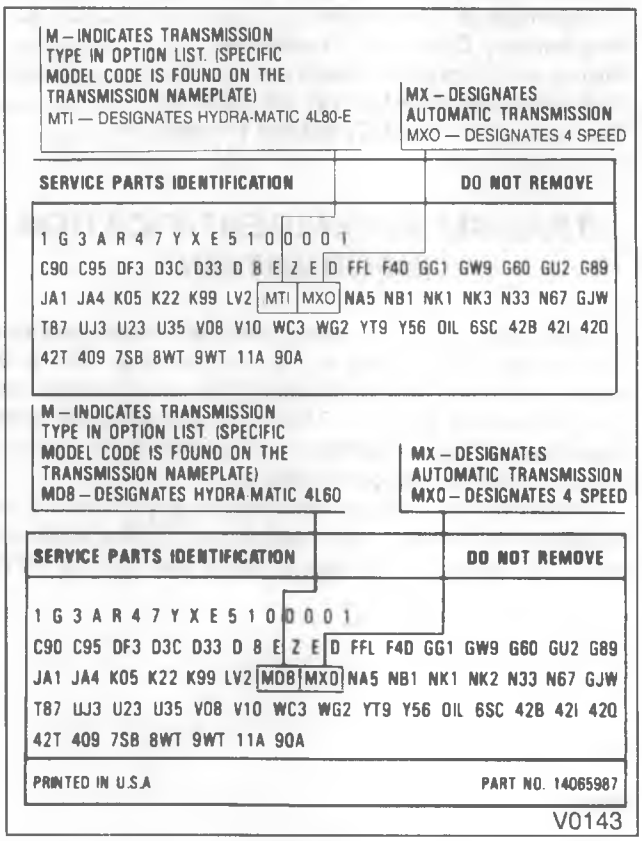

Figure 2 – Service Parts Identification Label

- Delayed – a condition where a shift is expected but does not occur for a period of time. Samples of this condition could be described as clutch or band engagement does not occur as quickly as expected during a part throttle or wide open throttle apply of the accelerator or, when manually downshifting to a lower range.

  Also defined as "LATE" or, "EXTENDED."
- Double Bump ("Double Feel") – two sudden and forceful applies of a clutch or band.
- Early – a condition where the shift occurs before the vehicle has reached a proper speed and tends to labor the engine after the upshift.
- End Bump – a firmer feel at the end of a shift as compared to the feel at the start of the shift. Also defined as "END FEEL" or, "SLIP BUMP."
- Firm – a noticeable quick apply of a clutch or band that is considered **normal** with a medium to heavy throttle shift. Should not be confused with "HARSH" or "ROUGH."
- Flare – a quick increase in engine rpm accompanied with a momentary loss of torque. This most generally occurs during a shift. Also defined as "SLIPPING."
- Harsh ("Rough") – a more noticeable apply of a clutch or band as compared to "FIRM." This condition is considered undesirable at any throttle position.
- Hunting – a repeating quick series of upshifts and downshifts that cause a noticeable change in engine rpm. An example could be described as a 4-3-4 shift pattern. Also defined as "BUSYNESS."
- Initial Feel – a distinct firmer feel at that start of a shift as compared to the finish of the shift.
- Late – a shift that occurs when the engine is at a higher than normal rpm for a given amount of throttle.
- Shudder – a repeating jerking sensation similar to "CHUGGLE" but more severe and rapid in nature. This condition may be most noticeable during certain ranges of vehicle speed. May also be used to define the condition after converter clutch engagement.
- Slipping – a noticeable increase in engine rpm without a vehicle speed increase. A slip usually occurs during or after initial clutch or band engagement.
- Soft – a slow, almost unnoticeable clutch apply with very little shift feel.
- Surge – a repeating engine related feeling of acceleration and deceleration that is less intense than "CHUGGLE."
- Tie-Up – a condition where two opposing clutches are attempting to apply at the same time causing the engine to labor with a noticeable loss of engine rpm.

NOISE CONDITIONS

- Gear Noise – a whine, most noticeable in first gear and reverse that is related to vehicle speed. A gear noise condition may become less noticeable or go away after an upshift.
- Pump Noise – a high pitch whine that increases in intensity with engine rpm. This condition may also be noticeable in "PARK" and "NEUTRAL" operating ranges with the vehicle stationary.

PRELIMINARY CHECKING PROCEDURE

The condition of an automatic transmission not operating properly may be influenced by one, or a combination of the following items:

- Fluid level high/low
- Engine performance (Refer to the Fuel and Emissions Manual if using X-9132, or to the rear of this manual if using ST330-91.)
- T.V. cable adjustment
- Manual linkage adjustment
- Internal fluid leaks. (Refer to Sec. 7A1 or Sec. 7A2).
- Electrical system (Refer to ELECTRICAL (SEC. 8), ELECTRONIC TRANSMISSION CONTROLS (SEC. 7A4), or the Fuel and Emissions Manual if using X-9132, or to the rear of this manual if using ST330-91.)
- Transmission or other mechanical component. (Refer to Sec. 7A1 or Sec. 7A2).

NOISE AND VIBRATION ANALYSIS

A noise or vibration that is noticeable when the vehicle is in motion, MAY NOT be the result of the transmission.

If noise or vibration is noticeable in "Park" (P) and "Neutral" (N) with engine at idle, but is less noticeable as rpm increases, the cause may be from poor engine performance.

Inspect

- Tires for:
  - Uneven wear
  - Imbalance
  - Mixed sizes
  - Mixed radial and bias ply (Refer to WHEELS AND TIRES (SEC. 3E).)
- Suspension components for:
  - Alignment and wear
  - Loose fasteners
- Engine/transmission mounts for:
  - Damage
  - Loose bolts
- Transmission case mounting holes for:
  - Missing bolts, nuts, studs
  - Stripped threads
  - Cracks
- Flywheel for:
  - Missing or loose bolts
  - Cracks
  - Imbalance. Refer to ENGINE (SEC. 6).

- Torque converter for:
  - Missing or loose bolts or lugs
  - Missing or loose balance weights
  - Imbalance

TRANSMISSION FLUID LEVEL INFORMATION

Checking fluid level, color and condition at regular intervals will provide early diagnosis information about the transmission. This information may then be used to correct a condition that, if not detected early, could result in major transmission repairs.

When adding or changing fluid, use only Dexron® II. Refer to MAINTENANCE AND LUBRICATION (SEC. 0B) for maintenance information and servicing intervals.

NOTICE: Do not overfill. Overfilling will cause foaming, loss of fluid and possible damage to the transmission.

- Fluid level should only be checked when it reaches a normal operating temperature of 82°-93°C (180°-200°F). This temperature is reached after approximately 15 miles (24 km) of driving.
- Fluid color will be red when new. The red dye is added so the assembly plant can identify it as transmission fluid and distinguish it from engine oil or anti-freeze. The red dye is not a indicator of the fluid quality and is not permanent. As the vehicle is driven the transmission fluid will begin to look darker in color. The color may eventually appear light brown.
- Inaccurate fluid level readings will result if the fluid is checked immediately after the vehicle has been operated under certain conditions.
  - In high ambient temperature above 32°C (90°F).
  - At sustained high speed.
  - In heavy city traffic during hot weather.
  - As a towing vehicle.
  - In commercial service.

TRANSMISSION FLUID CHECKING PROCEDURE

(Refer to Figure 3)

NOTICE: The automatic transmission fluid level must be checked with the vehicle at normal operating temperature 82°-93°C (180°-200°F). Temperature will greatly effect transmission fluid level. If the vehicle is not at normal operating temperature and the proper checking procedures are not followed the result could be a false reading of the fluid level indicator and an incorrect adjustment of the fluid level.

1. Start engine and drive vehicle for a minimum of 15 miles (24 km), or until normal operating temperature is reached.
2. Park vehicle on level ground.
3. Move gear selector to "PARK."
4. Apply park brake and block wheels.
5. Let the vehicle idle for 3 minutes with accessories off.
6. Check fluid level, color and condition.

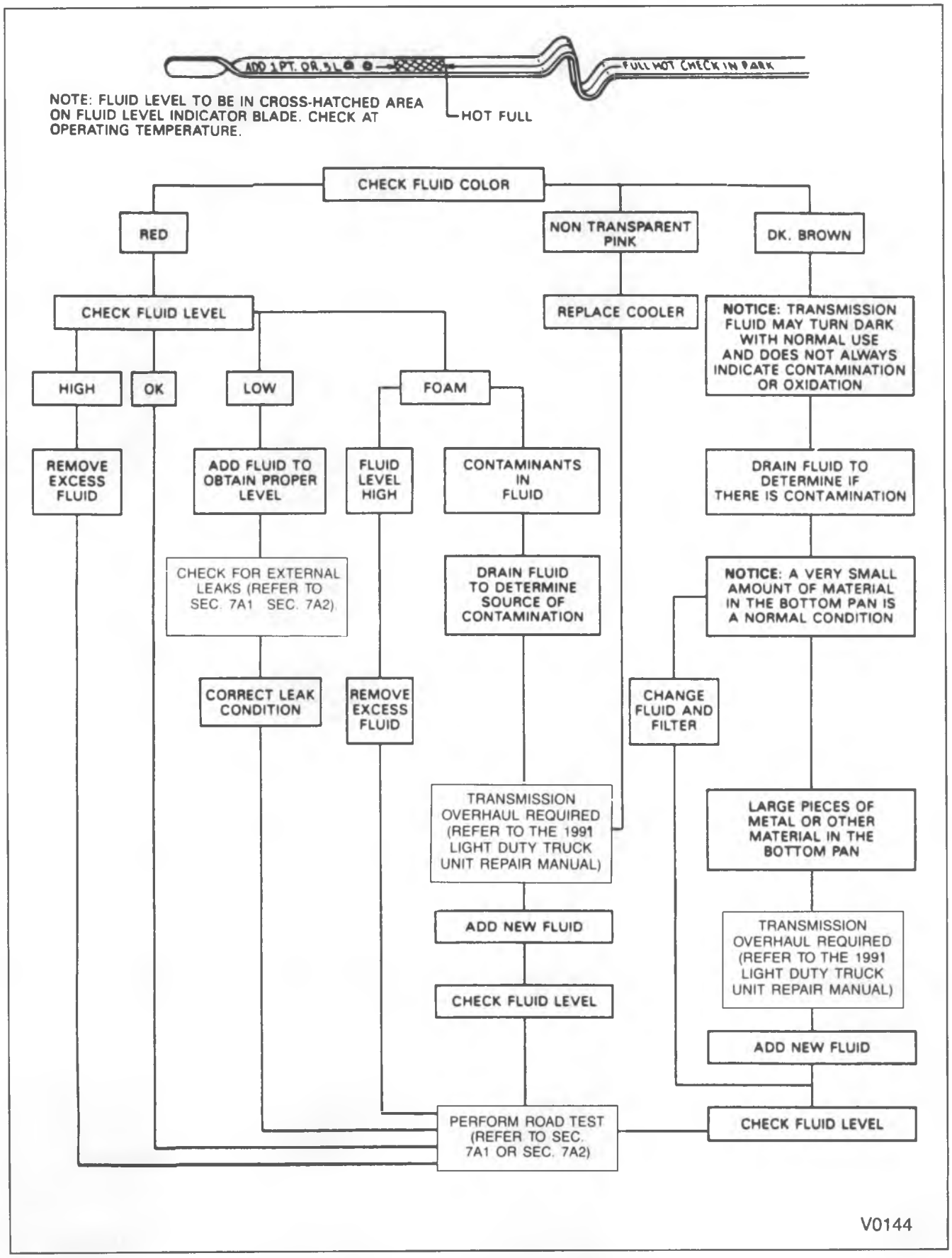

Figure 3 – Checking Fluid Color, Level and Condition

SECTION 7A1

4L60 AUTOMATIC TRANSMISSION

***NOTICE:** When fasteners are removed, always reinstall them at the same location from which they were removed. If a fastener needs to be replaced, use the correct part number fastener for that application. If the correct part number fastener is not available, a fastener of equal size and strength (or stronger) may be used. Fasteners that are not reused, and those requiring thread locking compound will be called out. The correct torque value must be used when installing fasteners that require it. If the above conditions are not followed, parts or system damage could result.*

CONTENTS

SUBJECT	PAGE
General Description	7A1- 2
Diagnosis Information	7A1- 3
Road Test Procedure	7A1- 3
Torque Converter Clutch (TCC) Diagnosis	7A1- 5
Line Pressure Check	7A1- 5
Torque Converter Evaluation	7A1- 5
Line Pressure Check Procedure	7A1- 7
Clutch Application Chart	7A1- 8
Diagnosis Charts	7A1- 9
Fluid Flow and Circuit Description	7A1-20
Electrical Wiring Diagrams	7A1-44
Fluid Passages	7A1-47
On-Vehicle Service	7A1-56
Parts Cleaning, Inspection and Replacement	7A1-56
Flywheel and Torque Converter Vibration Test	7A1-56
Fluid Leak Diagnosis	7A1-56
Torque Converter Clutch Electrical Controls	7A1-57
Torque Converter Clutch Diagnosis	7A1-57
Shift Linkage	7A1-58
TV Cable	7A1-60
TV Cable Adjustment	7A1-61
Changing the Fluid and Filter	7A1-62
Governor	7A1-62
Vehicle Speed Sensor Replacement	7A1-64
2-4 Servo	7A1-65
Filler Tube Replacement	7A1-69
Auxiliary Valve Body	7A1-69
Valve Body	7A1-70
Valve Body Pressure Switch Replacement	7A1-72
Rear Extension Oil Seal	7A1-72
Rear Extension Housing Bushing	7A1-73
Transmission Replacement	7A1-73
Pressure Regulator Valve	7A1-76
Accumulator Assembly	7A1-76
Shift Indicator Replacement	7A1-78
Shift Indicator Adjustment	7A1-78
Transmission Cooler Flushing	7A1-78
Specifications	7A1-80
Special Tools	7A1-81

GENERAL DESCRIPTION

Figure 1

The HYDRA-MATIC 4L60 is a fully automatic transmission for rear wheel drive vehicles which provides four forward gear ranges and a reverse.

The major components of this transmission are:

- Torque Converter Clutch Asm.
- Vane Type Pump
- 2-4 Band Asm.
- Five Multiple Disc Clutches
- Two Planetary Gear Sets
- One Sprag Clutch
- One Roller Clutch
- Valve Body Asm.

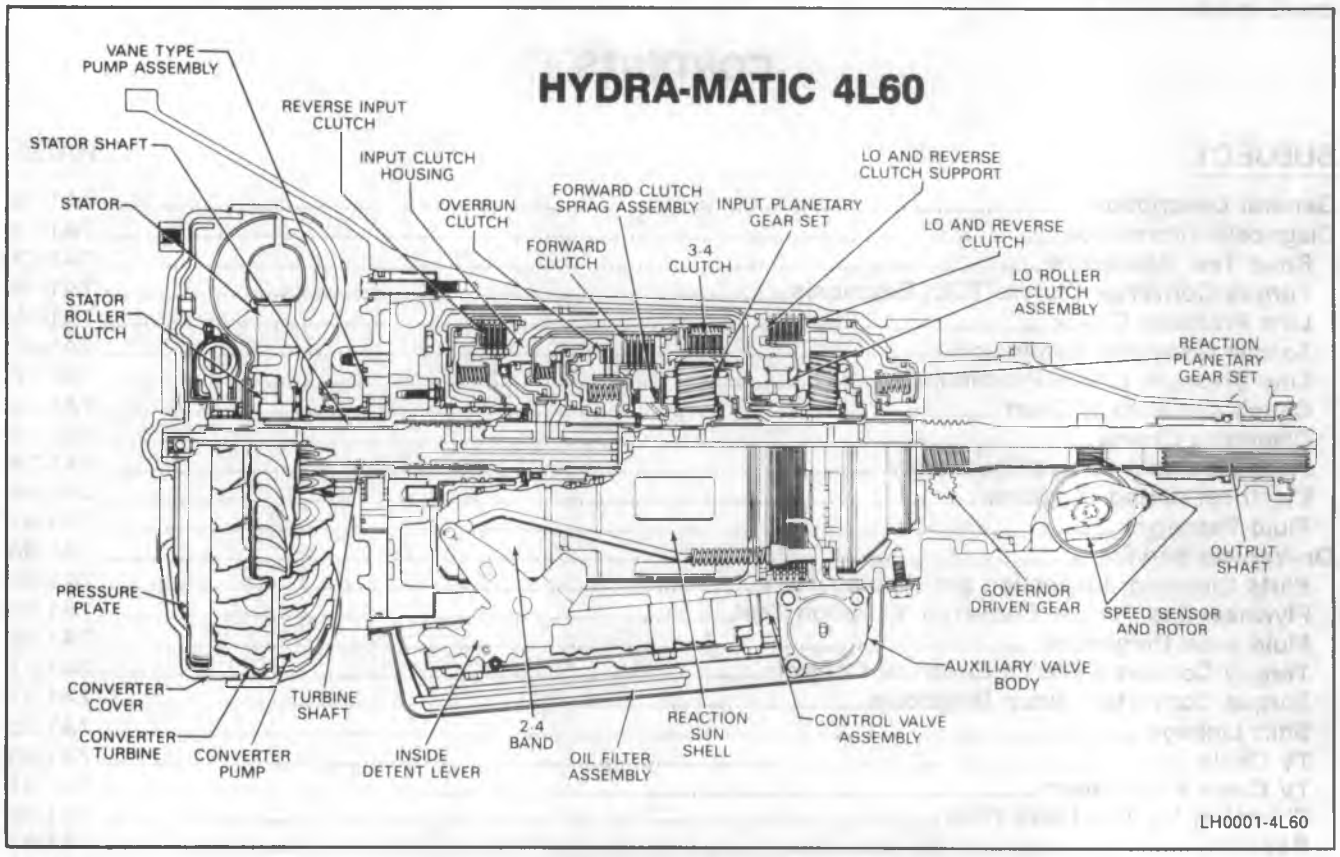

Figure 1 HYDRA-MATIC 4L60 Transmission

The oil pressure and shift points are controlled by throttle opening via a throttle valve cable. (See Section 7A1 for T.V. cable information).

The transmission can be operated in any one of the following seven modes:

P — Park position prevents the vehicle from rolling either forward or backward. (For safety reasons the parking brake should be used in addition to the park position).

R — Reverse allows the vehicle to be operated in a rearward direction.

N — Neutral allows the engine to be started and operated without driving the vehicle. If necessary this position may be selected if the engine must be restarted with the vehicle moving.

Ⓓ — Overdrive is used for all normal driving conditions. It provides four gear ratios plus converter clutch operation. Downshifts are available for safe passing by depressing the accelerator.

D — Drive position is used for city traffic, hilly terrain, and trailer towing. It provides three gear ranges. Again, downshifts are available by depressing the accelerator.

2 — Manual second is used to provide acceleration and engine braking. This range may be selected at any vehicle speed.

1 — Manual Lo is used to provide maximum engine braking. This range may also be selected at any vehicle speed.

DIAGNOSIS INFORMATION

ROAD TEST PROCEDURE

- Perform the road test following the sequence given
- Mph (km/h) shift points will vary with actual throttle position and driver habits
- Not all possible throttle positions and corresponding mph shift point information have been provided.
- Compare the results of the test with shift speed chart information. Use these results with the diagnosis information contained in this Automatic Transmission Diagnosis Section to evaluate the transmission.
- This test should only be performed when traffic and road conditions permit
- Observe all traffic safety regulations

Drive and Reverse Engagement Shift Check

1. Start engine
2. Depress brake pedal
3. Move gear selector:
   - "Park" (P) to "Reverse" (R)
   - "Reverse" (R) to "Neutral" (N) to "Drive" (D)
   - Drive and/or Reverse engagement, may take from 1-2 seconds at normal operating temperatures (180°-200°F/80°-90°C). Engagement should not be harsh.

Upshifts and Torque Converter Clutch (TCC) Apply

Figure 2

With gear selector in "Overdrive" Ⓓ

1. Accelerate using a steady increasing throttle pressure
2. Note the shift speed point gear engagements for:
   - 2nd gear
   - 3rd gear
   - Overdrive
3. Note the speed shift point for TCC apply. This should occur while in third gear or overdrive. If the apply is not noticed, refer to the Torque Converter Clutch Diagnosis information contained in this section of the Service Manual.

Important

The torque converter clutch will not engage if engine coolant has not reached a minimum operating temperature of approximately 54°C (130°F).

Part Throttle Downshift

At vehicle speeds of 40-55 mph (64-88 km/h) quickly depress the accelerator to a half open position and observe:

- TCC release
- Transmission downshift to 3rd gear immediately

Full Throttle (Detent) Downshift

At vehicle speeds of 48-55 mph (77-88 km/h) quickly depress the accelerator to a wide open position and observe:

- TCC release
- Transmission downshift to 2nd gear immediately

Manual Downshift

1. At vehicle speeds of 40-55 mph (64 to 88 km/h) release the accelerator pedal while moving the gear selector to "Third" (D) gear and observe:
   - TCC release
   - Transmission downshift to 3rd gear should be immediate
   - Engine should slow vehicle down
2. Move gear selector to "Overdrive" Ⓓ and accelerate to 40-45 mph (64-72 km/h). Release the accelerator pedal while moving the gear selector to "Second" (2) gear and observe.

1991 HYDRA-MATIC 4L60 SHIFT SPEED CHART

MODEL	1-2 MIN THROTTLE	2-3 MIN THROTTLE	3-4 MIN THROTTLE	1-2 W.O.T.	4-3 COAST DOWN	3-2 COAST DOWN	2-1 COAST DOWN
BBM	13-18	26-33	40-52	31-46	25-30	14-25	9-11
CAM, CBM, KAM	14-17	22-29	46-52	31-43	37-48	15-24	11-14
CCM, CFM, KBM, WBM	12-17	21-26	42-48	33-46	37-47	14-24	12-14
CHM, CJM, KCM, RAM, WCM	15-18	23-30	49+	29-41	34-45	15-21	10-13
FBM	15-17	24-30	39-45	37-51	28-35	16-24	10-12
FTM	12-15	21-26	39-48	28-41	31-39	13-22	10-12
FUM	13-15	23-25	38-46	25-41	25-31	14-21	9-11
FZM	13-17	24-32	44-52	36-46	34-39	10-19	10-12
LAM, LBM, LCM, LDM, LFM	10-13	20-24	38-43	25-34	29-40	14-22	8-10
MJM, MNM, WAM	13-17	22-29	46-52	28-39	34-44	14-22	10-12
MSM	11-13	20-23	41-46	22-36	26-37	11-19	7-9
SAM	12-14	18-24	47-53	24-37	37-47	10-18	9-12
SHM, TLM	14-17	24-31	49+	30-42	37-48	19-26	11-13

NOTES:
1. ALL SPEEDS INDICATED ARE IN MILES PER HOUR. CONVERSION TO km/h = MPH × 1.609.
2. SHIFT POINTS WILL VARY SLIGHTLY DUE TO ENGINE LOADS AND VEHICLE OPTIONS.
3. SPEEDS LISTED WITH + EXCEED 65 MPH.
4. SPEEDS ARE BASED ON TPS OF 10 TO 20. USE A SCAN TOOL TO MEASURE CORRECT TPS.

MH0002-4L60-R3

Figure 2 Shift Speed Chart

- TCC release
- Downshift to second gear should be immediate
- Engine should slow vehicle down

3. Move gear selector to "Overdrive" Ⓓ and accelerate to 25 mph (40 km/h). Release the accelerator pedal while moving the gear selector to "First" (1) gear and observe:
   - TCC release
   - Transmission downshift to 1st gear should be immediate
   - Engine should slow vehicle down

Coastdown Downshift

1. With the gear selector in "Overdrive" Ⓓ accelerate to 4th gear and TCC apply.
2. Release the accelerator pedal and lightly apply the brakes to observe:
   - TCC release
   - Shift points for downshifts

Manual Gear Range Selection

Manual Third (D)

1. With vehicle stopped, place gear selector in "Third" (D) and accelerate to observe:
   - The first to second gear shift point
   - The second to third gear shift point

Manual Second (2)

1. With vehicle stopped, place gear selector in "Second" (2) and accelerate to observe:
   - The first to second gear shift point
2. Accelerate to 25 mph (40 km/h) and observe:
   - That a second to third gear shift does not occur
   - That TCC does not engage

Manual First (1)

1. With vehicle stopped, place gear selector in "First" (1) and accelerate to 15 mph (24 km/h) and observe:
   - That no upshift occurs
   - That TCC does not engage

Reverse

1. With vehicle stopped, place gear selector in "Reverse" (R) and slowly accelerate to observe reverse gear operation.

TORQUE CONVERTER CLUTCH (TCC) DIAGNOSIS

The Torque Converter Clutch is applied by fluid pressure which is controlled by a solenoid located inside the Automatic Transmission assembly. The solenoid is energized by completing an electrical circuit through a combination of switches and sensors.

Functional Check Procedure

Inspect

1. Install a tachometer or scan tool.
2. Drive the vehicle until proper transmission operating temperature is reached.
3. Drive the vehicle at 50-55 mph (80-88 km/h) with light throttle (road load).
4. Maintaining throttle, lightly touch the brake pedal and check for release of the TCC and a slight increase in engine rpm.
5. Release the brake, slowly accelerate and check for a re-apply of the TCC and a slight decrease in engine rpm.

To properly diagnose the Torque Converter Clutch (TCC) system, perform all electrical testing first and then test the hydraulic system.

- For diagnosis of electrical or emission control related components of the TCC, refer to the specific vehicle section in Section 6E2-C8, Driveability and Emissions.
- For diagnosis of TCC hydraulic controls, refer to the Fluid Flow and Circuit Description, and Wiring Diagrams provided in this section.
- The Electrical Diagrams and Diagnosis manual shows additional wiring diagrams if needed.

NOTICE: Use only high impedence type ohmmeters for electrical testing on the TCC circuit. If another type of ohmmeter is used, damage to the TCC solenoid may occur.

NOTICE: Do not bench test the TCC solenoid using an automotive type battery. Accidentally crossed wires will damage the internal diode of the solenoid.

- A completed circuit does not indicate that the solenoid will actually apply.

LINE PRESSURE CHECK

Figure 3

The next step in diagnosing the Automatic Transmission is to do a line pressure check. This is a valuable tool in diagnosis since line pressure controls the hydraulic functions of the transmission.

Refer to figure 3 for the Line Pressure Check Procedure and line pressure chart.

TORQUE CONVERTER EVALUATION

The torque converter should be replaced under any of the following conditions:

- External leaks in the hub weld area
- Converter hub is scored or damaged.
- Converter pilot is broken, damaged or fits poorly into crankshaft.
- Steel particles are found after flushing the cooler and cooler lines.
- Pump is damaged or steel particles are found in the converter.
- Vehicle has TCC shudder and/or no TCC apply. Replace only after all hydraulic and electrical diagnoses has been made. (Converter clutch material may be glazed.)
- Converter has an imbalance which cannot be corrected. (Refer to Converter Vibration Test Procedure in the Transmission Unit Repair Section.)
- Converter is contaminated with engine coolant containing antifreeze.
- Internal failure of stator roller clutch
- Excess end play
- Heavy clutch debris due to overheating (blue converter)
- Steel particles or clutch lining material found in fluid filter or on magnet when no internal parts in unit are worn or damaged — indicates that lining material came from converter.

Noise

Torque converter whine is usually noticed when the vehicle is stopped and the transmission is in "Drive" or "Reverse". The noise will increase when engine rpm is increased. The noise will stop when the vehicle is moving or when the torque converter clutch is applied because both halves of the converter are turning at the same speed.

Perform a stall test to make sure the noise is actually coming from the converter:

1. Place foot on brake.
2. Put gear selector in "Drive".

3. Depress accelerator to approximately 1200 rpm for no more than six seconds.

NOTICE: If the accelerator is depressed for more than six seconds, damage to the transmission may occur.

A torque converter noise will increase under this load.

Imporant

- This noise should not be confused with pump whine noise which is usually noticeable in "Park", "Neutral" and all other gear ranges. Pump whine will vary with pressure ranges.

Torque Converter Stator

The torque converter stator roller clutch can malfunction in two different ways. It can either remain locked up at all times or freewheel in both directions.

If the stator is freewheeling at all times, the vehicle tends to have poor acceleration from the standstill. The car may act normal at speeds above 30-35 mph (50-55 km/h). If poor acceleration is noted, it should first be determined that the exhaust system is not blocked, the engine timing is correct, and the transmission is in "First" (1) gear when starting out.

If the engine accelerates freely to high rpm in "Neutral" (N), it can be assumed that the engine and exhaust system are normal. Checking for poor performance in "Drive" (D) and "Reverse" (R) will help determine if the stator is freewheeling at all times.

If the stator is locked up at all times, performance from a standstill appears normal. Engine rpm and acceleration is restricted or limited, however, at high speeds. The engine may overheat with this condition. Visual examination of the converter may reveal a blue color from overheating.

If the torque converter has been removed from the vehicle, the stator roller clutch can be checked by inserting a finger into the splined inner race of the roller clutch and trying to turn the race in both directions. The inner race should turn freely clockwise, but not turn or be very difficult to turn counterclockwise.

The Torque Converter Should Not Be Replaced If:

- The oil has an odor, is discolored, and there is no evidence of metal or clutch facing particles.
- The threads in one or more of the converter bolt holes are damaged.
  - Correct with thread insert.
- Transmission failure did not display evidence of damaged or worn internal parts, steel particles or clutch plate lining material in unit and inside the fluid filter.
- Vehicle has been exposed to high mileage (only). The exception may be where the torque converter clutch dampener plate lining has seen excess wear by vehicles operated in heavy and/or constant traffic, such as taxi, delivery or police use.

LINE PRESSURE CHECK PROCEDURE

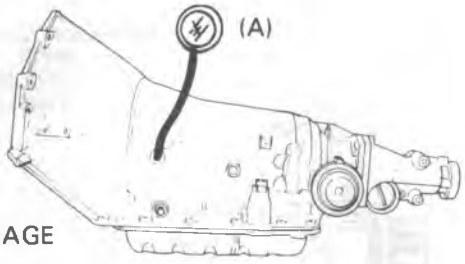

- CHECK TRANSMISSION FLUID LEVEL
- CHECK AND ADJUST T.V. CABLE
- CHECK OUTSIDE MANUAL LINKAGE AND CORRECT
- CHECK ENGINE TUNE
- INSTALL PRESSURE GAGE
- CONNECT TACHOMETER TO ENGINE
- CHECK PRESSURE AS FOLLOWS:

(A) ATTACH PRESSURE GAGE

Minimum T.V. Line Pressure Check
Set the T.V. cable to specification; and with the brakes applied, take the line pressure readings in the ranges and at the engine r.p.m. indicated in the chart below.

Full T.V. Line Pressure Check
Full T.V. line pressure readings are obtained by tying or holding the T.V. cable to the full extent of its travel; and with the brakes applied, take the line pressure readings in the ranges and at the engine r.p.m. indicated in the chart below.

***NOTICE** Total running time for this combination not to exceed 2 minutes.

CAUTION Brakes must be applied at all times.

1991 HYDRA-MATIC 4L60 TRANSMISSION PRESSURES

RANGE	MODEL	NORMAL PRESSURE AT MINIMUM T.V.		NORMAL PRESSURE AT FULL T.V.	
		kPa	PSI	kPa	PSI
PARK, NEUTRAL, OVERDRIVE & MANUAL 3RD @ 1000 RPM	BBM	483-622	70-90	866-1146	125-166
	CAM, CBM, KAM, MJM, MNM, WAM	451-515	65-75	851-1063	123-154
	CCM, CFM, KBM, WBM	451-515	65-75	947-1185	137-172
	CHM, CJM, KCM, RAM, WCM	451-515	65-75	914-1149	133-167
	FBM	451-515	65-75	918-1146	133-166
	FTM, FUM, FZM	451-515	65-75	1073-1354	155-196
	LAM, LBM, LCM, LDM, LFM	451-515	65-75	899-1134	130-164
	MSM	483-622	70-90	797-1079	116-157
	SAM	451-515	65-75	845-1068	123-155
	SHM, TLM	451-515	65-75	969-1231	141-179
REVERSE @ 1000 RPM	BBM	793-1023	115-148	1424-1883	206-273
	CAM, CBM, KAM, MJM, MNM, WAM	742-847	108-123	1400-1747	203-253
	CCM, CFM, KBM, WBM	742-847	108-123	1556-1948	226-283
	CHM, CJM, KCM, RAM, WCM	742-847	108-123	1503-1889	218-274
	FBM	580-662	84-96	1180-1472	171-214
	FTM, FUM, FZM	742-847	108-123	1763-2225	256-323
	LAM, LBM, LCM, LDM, LFM	741-845	107-123	1474-1860	214-270
	MSM	793-1023	115-148	1311-1773	190-257
	SAM	580-662	84-96	1085-1372	157-199
	SHM, TLM	742-847	108-123	1593-2023	231-293
MANUAL 2ND & MANUAL LO @ 1000 RPM	CAM, CBM, CCM, CFM, CHM, CJM, FBM, FTM, FUM, FZM, KAM, KBM, KCM, MJM, MNM, RAM, SAM, SHM, TLM, WAM, WBM, WCM	1127-1286	163-186	1127-1286	163-186
	BBM, MSM	1205-1554	175-226	1205-1554	175-226
	LAM, LBM, LCM, LDM, LFM	1191-1359	173-197	1191-1359	173-197

Line pressure is basically controlled by pump output and the pressure regulator valve. In addition, line pressure is boosted in Reverse, Second and Lo by the reverse boost valve.

Also, in the Neutral, Drive, Intermediate and Reverse positions of the selector lever, the line pressure should increase with throttle opening because of the T.V. system. The pressure is controlled by the T.V. cable, the throttle lever and bracket assembly and the T.V. link, as well as the control valve assembly.

The main line pressure tap plug is located on the left side of the transmission above the outside manual lever.

MH0003-4L60-R3

Figure 3 Line Pressure Check Procedure

HYDRA-MATIC 4L60 - GEAR RATIOS

FIRST	3.06	FOURTH	.70
SECOND	1.62	REVERSE	2.29
THIRD	1.00		

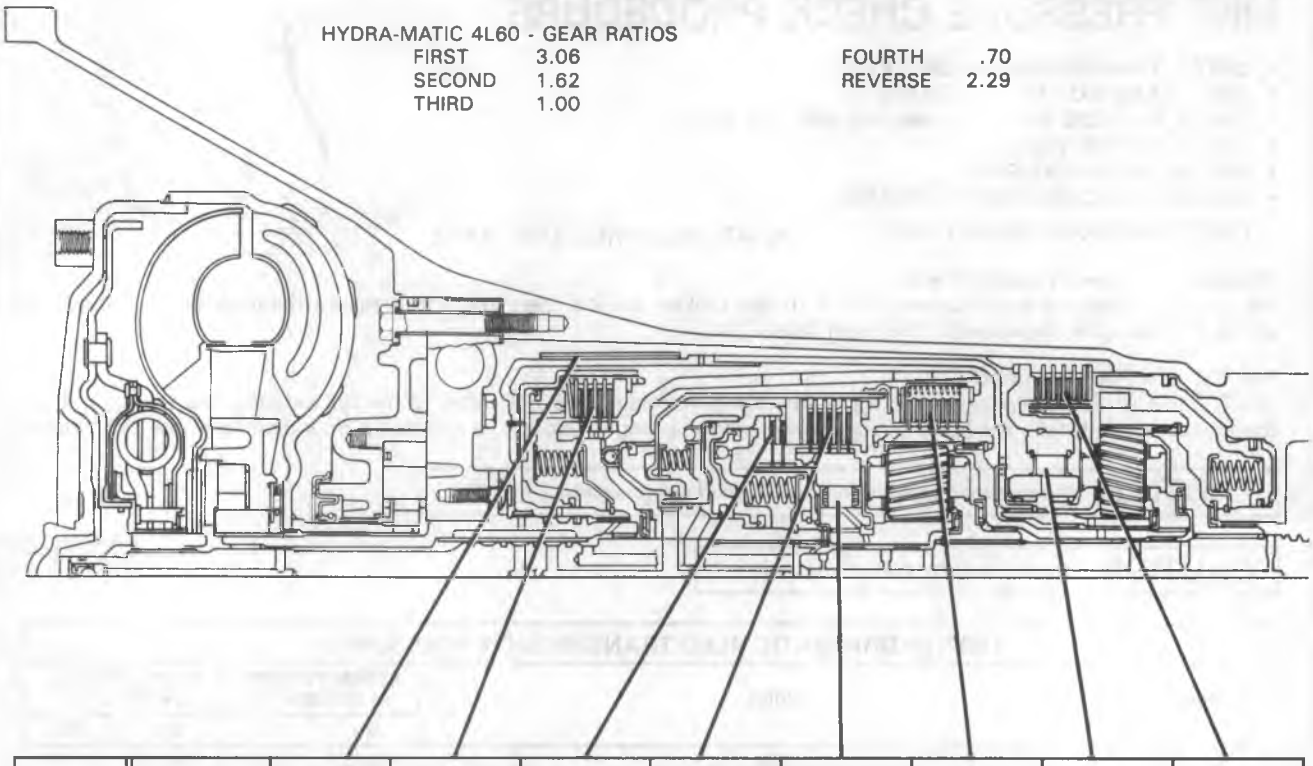

RANGE	GEAR	2-4 BAND	REVERSE INPUT CLUTCH	OVERRUN CLUTCH	FORWARD CLUTCH	FORWARD SPRAG CL. ASSEMBLY	3-4 CLUTCH	LO-ROLLER CLUTCH	LO-REV. CLUTCH
P-N									
D	1st				APPLIED	HOLDING		HOLDING	
	2nd	APPLIED			APPLIED	HOLDING			
	3rd				APPLIED	HOLDING	APPLIED		
	4th	APPLIED			APPLIED		APPLIED		
D	1st			APPLIED	APPLIED	HOLDING		HOLDING	
	2nd	APPLIED		APPLIED	APPLIED	HOLDING			
	3rd			APPLIED	APPLIED	HOLDING	APPLIED		
2	1st			APPLIED	APPLIED	HOLDING		HOLDING	
	2nd	APPLIED		APPLIED	APPLIED	HOLDING			
1	1st			APPLIED	APPLIED	HOLDING		HOLDING	APPLIED
R	REVERSE		APPLIED						APPLIED

LH0004-4L60

Figure 4 Clutch Application Chart

CONDITION	INSPECT COMPONENT	FOR CAUSE
OIL PRESSURE HIGH OR LOW (Verify With Gage—Refer To Line Pressure Check Procedure)	• Oil Pump Assembly (7)	— Pressure regulator valve (218) stuck. — Pressure regulator valve spring (219) damaged. — Rotor guide (213) omitted or misassembled. — Rotor (214) cracked or broken. — T.V. boost valve (222), reverse boost valve (220) or sleeve (221) stuck, damaged or incorrectly assembled. — Orifice hole in pressure regulator valve (218) plugged. — Sticking slide (206) or excessive rotor clearance. — Pressure relief ball (231) not seated or damaged. — Porosity in pump cover or body. — Wrong pump cover. — Pump faces not flat. — Excessive rotor clearance.
	• Oil Filter (71)	— Intake pipe restricted by casting flash. — Cracks in filter body or intake pipe. — "O" ring seal (70) missing, cut or damaged. — Wrong grease used on rebuild.
	• T.V. Exhaust Ball (91)	— Stuck or damaged.
	• Throttle Lever & Bracket Assembly (65)	— Misassembled, binding or damaged.
	• Throttle Link (64)	— Misassembled, binding or damaged.
	• Valve Body (67)	— Manual valve (340) scored or damaged. — Spacer plate (56) or gaskets (88 & 89) incorrect, misassembled or damaged. — Face not flat. — Throttle valve (326) sticking. — T.V. limit valve (332) sticking. — Modulated downshift valve (301) stuck. — Line bias valve (336) stuck. — 2-3 Shift valve (316) stuck. — Checkballs omitted or misassembled.
	• Case (10)	— Case to valve body face not flat.
HIGH OR LOW SHIFT POINTS	• T.V. Cable	— Binding or not correctly adjusted.
	• T.V. Exhaust Ball (91)	— Stuck or damaged.
	• Throttle Lever & Bracket Assembly (65)	— Misassembled, binding or damaged.

ALL ILLUSTRATION NUMBERS REFERENCE HYDRA-MATIC 4L60 UNIT REPAIR SECTION

LH0005-4L60-R1

Figure 5 Diagnosis Chart A

CONDITION	INSPECT COMPONENT	FOR CAUSE
HIGH OR LOW SHIFT POINTS (Continued)	• Oil Pump Assembly (7)	— Stuck pressure regulator valve (218) or T.V. boost valve (222). — Sticking pump slide (206).
	• Valve Body Assembly (67)	— Sticking throttle valve (326) or plunger (324). — Modulated T.V. up or down valves (301 & 303) sticking. — T.V. limit valve (332) sticking. — Spacer plate (56) or gaskets (88 & 89) misassembled, damaged or incorrect. — Line bias valve (336) sticking.
	• Case (10)	— Porous or damaged valve body pad. — Governor filter (47A) restricted or damaged. — 2-4 Servo Assembly (13-31) a. 2-4 accumulator porosity. b. Damaged servo piston seals. c. Apply pin damaged or improper length. — 2-4 Band Assembly (602) a. Burned. b. Anchor pin not engaged.
1ST GEAR RANGE ONLY — NO UPSHIFT	• Governor Assembly (45)	— Governor valve (107) sticking. — Governor driven gear (83) loose or damaged: a. Wear on bottom of gear indicates pin is not pressed in deep enough. b. Wear of corner of gear indicates pin is missing. c. Wear resembles an apple core if wrong gear is used, or there is a burr on the output shaft. d. Wear on one side of gear indicates output shaft snap ring is missing or the governor has seized in the bore. — Governor driven gear retaining pin (82) missing. — Nicks or burrs on output shaft (687). — Nicks or burrs on governor sleeve (106) or case bore. — Governor support pin in case too long or short. — Governor weights (108 & 109) or springs (110 & 111) missing, binding or damaged.
	• Valve Body (67)	— 1-2 Shift valve (322) sticking. — Spacer plate (56) or gaskets (88 & 89) mispositioned or damaged.
	• Case (10)	— Case to valve body face not flat or damaged. — Governor filter (47A) restricted or damaged.

ALL ILLUSTRATION NUMBERS REFERENCE HYDRA-MATIC 4L60 UNIT REPAIR SECTION

LH0006-4L60

Figure 6 Diagnosis Chart B

CONDITION	INSPECT COMPONENT	FOR CAUSE
1ST GEAR RANGE ONLY — NO UPSHIFTS (Continued)	• 2-4 Servo Assembly (13-31)	— Restricted or blocked apply passages in case. — Nicks or burrs on servo pin (29) or pin bore in case. — 4th Servo piston (16) in backwards.
	• 2-4 Band Assembly (602)	— 2-4 Band (602) worn or damaged. — Band anchor pin not engaged.
SLIPS IN 1ST GEAR	• Forward Clutch Assembly	— Clutch plates (649) worn. — Porosity or damage in forward clutch piston (630). — Forward clutch piston inner and outer seals (629) missing, cut or damaged. — Input housing to forward clutch housing "O" ring seal (622) missing, cut or damaged. — Damaged forward clutch housing (628). — Forward clutch housing retainer and ball assembly (627) not sealing or damaged.
	• Forward Clutch Accumulator	— Piston seal (369) missing, cut or damaged. — Piston (367) out of its bore. — Porosity in the piston or auxiliary valve body (377). — Stuck abuse valve (360).
	• Oil Pump (7)	— Auxiliary accumulator valve tube (96) leaks, not seated in pump cover or missing.
	• Input Housing & Shaft Assembly (621)	— Turbine shaft seals (619) missing, cut or damaged.
	• Valve Body (67)	— 1-2 Accumulator valve (333) stuck. — Face not flat, damaged lands or interconnected passages. — Spacer plate (56) or gaskets (88 & 89) incorrect, mispositioned or damaged.
	• T.V. Cable	— Binding or broken.
	• Low Roller Clutch (678)	— Damage to lugs or inner ramps. — Rollers not free moving. — Inadequate spring tension — Damage to inner splines. — Lube passage plugged.
	• Torque Converter (1)	— Stator roller clutch not holding.

ALL ILLUSTRATION NUMBERS REFERENCE HYDRA-MATIC 4L60 UNIT REPAIR SECTION

LH0007-4L60-R1

Figure 7 Diagnosis Chart C

CONDITION	INSPECT COMPONENT	FOR CAUSE
SLIPS IN 1ST GEAR (Continued)	• 1-2 Accumulator Assembly (59-63)	— Porosity in piston (61) or 1-2 accumulator cover and pin assembly (62). — Damaged ring grooves on piston. — Piston seal (60) missing, cut or damaged. — Valve body to spacer plate gasket (89) at 1-2 Accumulator cover, missing or damaged. — Leak between piston and pin. — Broken 1-2 accumulator spring (59).
	• Oil Pressure	— (See Causes of High or Low Oil Pressure.)
	• 2-4 Servo Assembly (13-31)	— 4th Servo piston (16) in backwards.
1-2 SHIFT SPEED — HIGH OR LOW	• T.V. Cable	— Binding or broken. — Not correctly adjusted.
	• Governor Assembly (45)	— (See 1st Gear Range Only — No Upshift.)
	• Throttle Lever & Bracket Assembly (65)	— Misassembled, binding or damaged. — T.V. link missing, binding or damaged.
	• Valve Body (67)	— T.V. exhaust checkball (91) stuck. — T.V. plunger (324) sticking. — Face not flat.
	• Oil Pump Assembly (71) or Case (10)	— Face not flat.
SLIPPING OR ROUGH 1-2 SHIFT	• Throttle Lever & Bracket Assembly (65)	— Incorrectly installed or damaged. — T.V. cable broken or binding.
	• Valve Body Assembly (67)	— Throttle valve (326) sticking. — 1-2 Shift valve train (317-322) stuck. — Gaskets (88 & 89) or spacer plate (56) incorrect, mispositioned or damaged. — Line bias valve (336) stuck. — 1-2 Accumulator valve (333) stuck. — T.V. limit valve (332) stuck. — Face not flat.
	• 2-4 Servo Assembly (13-31)	— Apply pin (29) too long or too short. — 2nd servo apply piston seal missing, cut or damaged. — Restricted or missing oil passages. — Servo bore in case damaged.
	• 2nd Accumulator (59-63)	— Porosity in 1-2 accumulator housing (62) or piston (61). — Piston seal or groove damaged. — Nicks or burrs in 1-2 accumulator housing. — Missing or restricted oil passage.

ALL ILLUSTRATION NUMBERS REFERENCE HYDRA-MATIC 4L60 UNIT REPAIR SECTION

LH0008-4L60

Figure 8 Diagnosis Chart D

CONDITION	INSPECT COMPONENT	FOR CAUSE
SLIPPING OR ROUGH 1-2 SHIFT (Continued)	• 2-4 Band (602)	— Worn or mispositioned.
	• Oil Pump Assembly (7) or Case (10)	— Faces not flat.
NO 2-3 SHIFT OR 2-3 SHIFT SLIPPING, ROUGH OR HUNTING	• Converter (1)	— Internal damage.
	• Governor Assembly (45)	— Valve (107) stuck. — Drive gear retaining pin (82) missing or loose. — Governor weights (108 & 109) binding. — Governor driven gear (83) damaged. — Governor support pin in case too long or too short.
	• Oil Pump (7)	— Stator shaft (216) sleeve scored or off location.
	• Valve Body (67)	— 2-3 Valve train (313-316) stuck. — Accumulator valve (333) stuck. — Spacer plate (56) or gaskets (88 & 89) incorrect, mispositioned or damaged. — Throttle valve (326) stuck. — T.V. limit valve (332) stuck.
	• Input Housing Assembly (621)	— Clutch plates worn [3-4 (654) or forward (649)]. — Excessive clutch plate travel. — Cut or damaged piston seals [3-4 (624) or forward (629)]. — Porosity in input clutch housing (621) or piston (623). — 3-4 Piston checkball (620) stuck, damaged or not sealing. — Restricted apply passages. — Forward clutch piston retainer and ball assembly (627) not seating. — Sealing balls loose or missing.
	• Case (10)	— 3rd Accumulator retainer and ball assembly (80) not seating.
	• 2-4 Servo Assembly (13-31)	— 2nd Apply piston seals (23 & 24) missing, cut or damaged.
NO 3-4 SHIFT/SLIPPING OR ROUGH 3-4 SHIFT	• Governor (45)	— Governor weights (108 & 109) binding. — Governor valve (107) stuck. — Governor driven gear retaining pin (82) missing or loose. — Governor driven gear (83) damaged. — Governor support pin in case too long or too short.

ALL ILLUSTRATION NUMBERS REFERENCE HYDRA-MATIC 4L60 UNIT REPAIR SECTION

LH0009-4L60

Figure 9 Diagnosis Chart E

CONDITION	INSPECT COMPONENT	FOR CAUSE
NO 3-4 SHIFT/SLIPPING OR ROUGH 3-4 SHIFT (Continued)	• Oil Pump Assembly (7)	Faces not flat. — Pump cover retainer and ball assembly omitted or damaged.
	• Valve Body Assembly (67)	— Valves stuck. • 2-3 Shift valve (313-316) train. • Accumulator valve (333). • Throttle valve (326). • T.V. limit valve (332). • 1-2 Shift valve train (317-322). • 3-2 Control valve (339). — Manual valve link (64) bent or damaged. — Spacer plate (56) or gaskets (88 & 89) incorrect, mispositioned or damaged.
	• 2-4 Servo Assembly (13-31)	— Incorrect band apply pin (29). — Missing or damaged servo seals (14 & 17). — Porosity in pistons, cover or case. — Damaged piston seal grooves. — Plugged or missing orifice cup plug (86).
	• Case (10)	— 3rd Accumulator retainer and ball assembly (80) leaking. — Porosity in 3-4 accumulator piston (52) or bore. — 3-4 Accumulator piston seal (53) or seal grooves damaged. — Plugged or missing orifice cup plug (81). — Restricted oil passage.
	• Input Housing Assembly (621)	— Refer to Slipping 2-3 Shift.
	• 2-4 Band Assembly (602)	— Worn or misassembled.
NO REVERSE OR SLIPS IN REVERSE	• Input Housing Assembly (621)	— 3-4 Apply ring (625) stuck in applied position. — Forward clutch not releasing. — Turbine shaft seals (619) missing, cut or damaged.
	• Manual Valve Link (705)	— Disconnected.
	• Oil Pump Assembly (7)	— Retainer and ball assembly missing or damaged. — Stator shaft seal rings (233) or ring grooves damaged. — Stator shaft sleeve scored or damaged. — Reverse boost valve (220) stuck, damaged or misassembled. — Cup plug missing. — Restricted oil passage. — Faces not flat. — Converter clutch valve (227) stuck.

ALL ILLUSTRATION NUMBERS REFERENCE HYDRA-MATIC 4L60 UNIT REPAIR SECTION

LH0010-4L60

Figure 10 Diagnosis Chart F

CONDITION	INSPECT COMPONENT	FOR CAUSE
NO REVERSE OR SLIPS IN REVERSE (Continued)	• Valve Body Assembly (67)	— 2-3 Shift valve (316) stuck. — Manual linkage (64) not adjusted. — Spacer plate (56) and gaskets (88 & 89) incorrect, mispositioned or damaged.
	• Reverse Input Clutch Assembly (605)	— Clutch plate (612) worn. — Reverse input housing and drum assembly (605) cracked at weld. — Clutch plate retaining ring out of groove. — Return spring assembly retaining ring (610) out of groove. — Seals (608) cut or damaged. — Restricted apply passage. — Porosity in piston (607). — Belleville plate (611) installed incorrectly. — Excessive clutch plate travel.
	• Auxiliary Valve Body (377)	— Lo overrun valve (364) stuck. — Orificed cup plug (359) restricted, missing or damaged.
	• Lo And Reverse Clutch	— Clutch plates (682) worn. — Porosity in piston (695). — Seals (696) damaged. — Return spring assembly retaining ring (693) mispositioned. — Restricted apply passage.
NO PART THROTTLE OR DELAYED DOWNSHIFTS	• T.V. Cable	— Loose or incorrectly installed.
	• T.V. Bracket Assembly (65)	— Bent.
	• 2-4 Servo Assembly (13-31)	— Servo cover retaining ring (13) omitted or misassembled. — 4th Apply piston (16) damaged or misassembled. — Servo inner housing (22) damaged or misassembled.
	• Governor Assembly (45)	— Governor weights (108 & 109) binding. — Governor valve (107) stuck.
	• Valve Body Assembly (67)	— Valves stuck. • Throttle valve (326) • 3-2 Control valve (339) • T.V. modulated downshift (301) — 4-3 Sequence valve body channel blocked.

ALL ILLUSTRATION NUMBERS REFERENCE HYDRA-MATIC 4L60 UNIT REPAIR SECTION

LH0011-4L60-R1

Figure 11 Diagnosis Chart G

CONDITION	INSPECT COMPONENT	FOR CAUSE
NO OVERRUN BRAKING — MANUAL 3-2-1	• External Linkage	— Not adjusted properly.
	• Valve Body Assembly (67)	— Valves stuck. • 4-3 Sequence valve (329) • Throttle valve (326) — Checkball #3 mispositioned. — Spacer plate (56) and gaskets (88 & 89) incorrect, damaged or mispositioned.
	• Input Clutch Assembly (621)	— Turbine shaft oil passages plugged or not drilled. — Turbine shaft seal rings (619) damaged. — Turbine shaft sealing balls loose or missing. — Porosity in forward (630) or overrun clutch piston (632). — Overrun piston seals (631) cut or damaged. — Overrun piston checkball (633) not sealing.
NO CONVERTER CLUTCH APPLY	• Electrical	— 12 Volts not supplied to transmission. — Outside electrical connector damaged. — Inside electrical connector, wiring harness or solenoid damaged. — Electrical short (pinched solenoid wire). — Solenoid not grounded. — Incorrect or damaged pressure switches. — Temperature switch damaged.
	• Converter (1)	— Internal damage.
	• Oil Pump Assembly (7)	— Converter clutch valve (227) stuck or assembled backwards. — Converter clutch valve retaining ring (225) mispositioned. — Pump to case gasket (9) mispositioned. — Orifice cup plug (240) restricted or damaged. — Solenoid "O" ring seal (49) cut or damaged. — High or uneven bolt torque (pump body to cover).
	• Input Housing and Shaft (621)	— Turbine shaft "O" ring seal (618) cut or damaged. — Turbine shaft retainer and ball assembly (617) restricted or damaged.
	• Valve Body Assembly (67)	— TCC shift valve stuck. — TCC apply valve stuck. — Solenoid o-ring leaking.
	• Solenoid Screen (47B)	— Blocked.

ALL ILLUSTRATION NUMBERS REFERENCE HYDRA-MATIC 4L60 UNIT REPAIR SECTION

LH0012-4L60-R1

Figure 12 Diagnosis Chart H

CONDITION	INSPECT COMPONENT	FOR CAUSE
CONVERTER SHUDDER	• Torque Converter Assembly (1)	— Internal damage.
	• Oil Pump Assembly (7)	— Converter clutch valve (227) stuck. — Restricted oil passage.
	• Oil Filter (71)	— Crack in filter body. — Flash restricting filter neck. — "O" ring seal (70) cut or damaged.
	• Miscellaneous	— Low oil pressure. — Engine not tuned properly.
	• Input Housing and Shaft Assembly (621)	— Turbine shaft "O" ring (618) cut or damaged. — Turbine shaft retainer and ball assembly (617) restricted or damaged.
NO CONVERTER CLUTCH RELEASE	• Solenoid	— External ground. — Clogged exhaust orifice.
	• Converter (1)	— Internal damage.
	• Valve Body Assembly (67)	— Converter clutch apply valve stuck in apply position.
	• Oil Pump Assembly (7)	— Converter clutch valve (227) stuck.
	• ECM	— External ground.
DRIVES IN NEUTRAL	• Forward Clutch	— Not releasing.
	• Manual Valve Link (705)	— Disconnected.
	• Case (10)	— Face not flat. — Internal leakage.
2ND GEAR START (DRIVE RANGE)	• Governor Assembly (45)	— Valve (107) stuck. — Governor support pin too long or missing.
	• Forward Clutch Sprag Assembly (642)	— Sprag assembly installed backwards.
NO PARK	• Parking Linkage (701-715)	— Actuator rod assembly (701) bent or damaged. — Actuator rod spring binding or improperly crimped. — Actuator rod not attached to inside detent lever (703). — Parking lock bracket (710) damaged or not torqued properly.

ALL ILLUSTRATION NUMBERS REFERENCE HYDRA-MATIC 4L60 UNIT REPAIR SECTION

LH0013-4L60-R1

Figure 13 Diagnosis Chart I

CONDITION	INSPECT COMPONENT	FOR CAUSE
NO PARK (Continued)	• Parking Linkage (Cont.)	— Inside detent lever (703) not torqued properly. — Detent roller and spring assembly (709) mispositioned or not torqued properly. — Parking pawl (711) binding or damaged.
RATCHETING NOISE	• Parking Pawl (711)	— Parking pawl return spring (714) weak, damaged or misassembled.
OIL OUT THE VENT	• Oil Pump (7)	— Chamfer in pump body rotor pocket too large.
	• Valve Body (67)	— T.V. limit valve (332) stuck.
	• Miscellaneous	— Fluid level - overfilled.
VIBRATION IN REVERSE AND WHINING NOISE IN PARK	• Oil Pump (7)	— Broken vane rings (212).
NO DRIVE IN ALL RANGES	• Torque Converter (1)	— Converter to flex plate bolts missing.
NO DRIVE IN DRIVE RANGE	• Torque Converter (1)	— Stator roller clutch not holding. — Converter not bolted to flex plate.
FRONT OIL LEAK	• Torque Converter (1)	— Welded seam leaking. — Damaged converter hub.
	• Torque Converter Seal (2)	— Damaged seal assembly. — Missing garter spring.
DELAY IN DRIVE AND REVERSE	• Torque Converter (1)	— Converter drainback.

ALL ILLUSTRATION NUMBERS REFERENCE HYDRA-MATIC 4L60 UNIT REPAIR SECTION

LH0014-4L60-R1

Figure 14 Diagnosis Chart J

THIS PAGE INTENTIONALLY LEFT BLANK

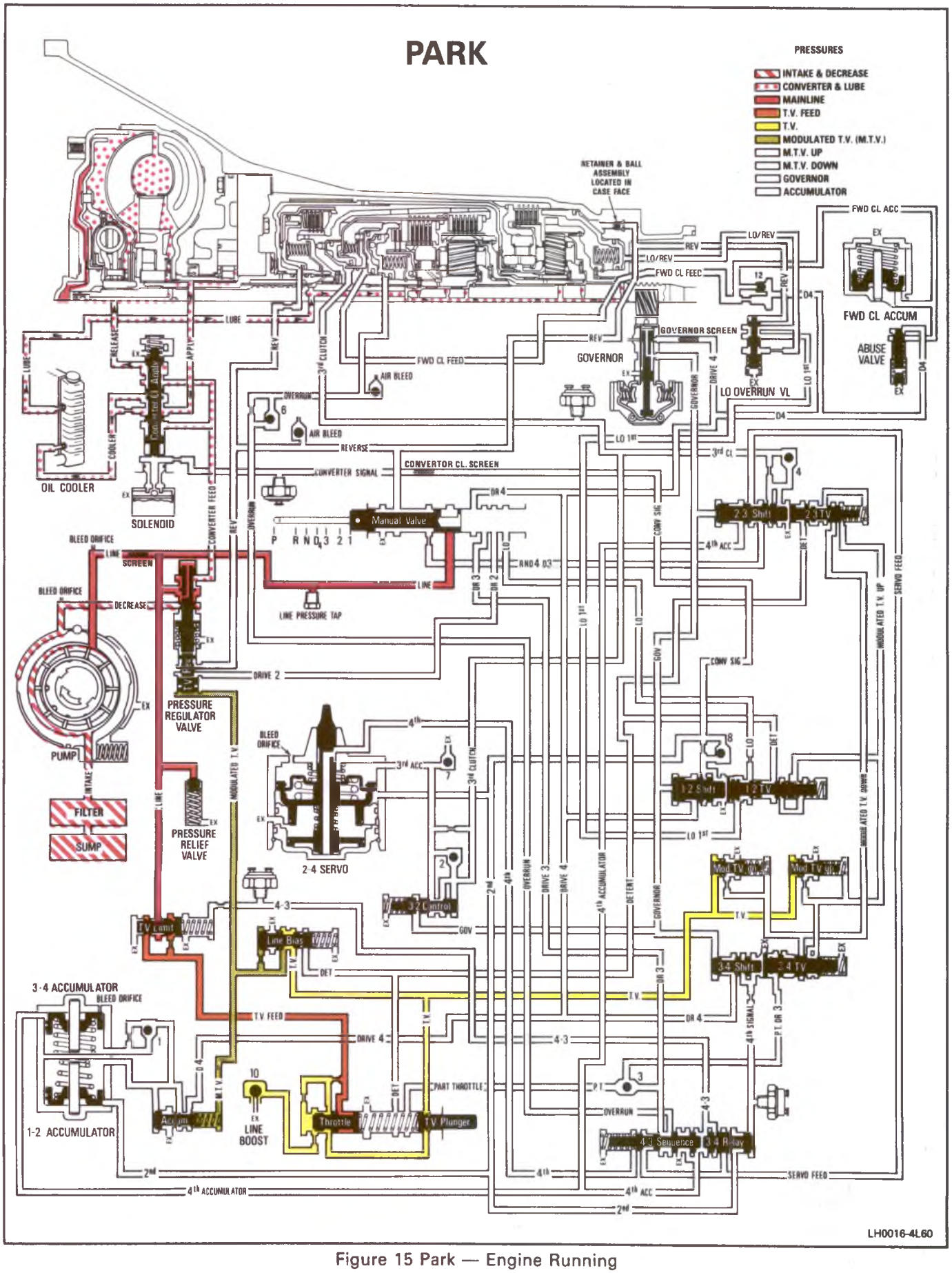

Figure 15 Park — Engine Running

PARK—ENGINE RUNNING

CONVERTER CLUTCH – RELEASED	**3-4 CLUTCH – RELEASED**	**2-4 BAND – RELEASED**
REVERSE INPUT CLUTCH – RELEASED	**LO AND REVERSE CLUTCH – RELEASED**	**OVERRUN CLUTCH – RELEASED**
FORWARD CLUTCH – RELEASED	**LO ROLLER CLUTCH – NOT HOLDING**	**FORWARD SPRAG CLUTCH – NOT HOLDING**

With the selector lever in the Park (P) position, oil from the pump is directed to the following:

1. Pressure Regulator Valve
2. Release Side of the Converter and the Lubrication System
3. Decrease Side of the Pump Slide
4. Manual Valve
5. T.V. System (Limit Valve, Throttle Valve, Line Bias Valve, M.T.V. Up Valve and M.T.V. Down Valve)
6. Pressure Relief Valve
7. Line Pressure Tap

Oil flows from the pump to the pressure regulator valve which regulates the pump pressure. When the pump output exceeds the demand of line pressure, oil from the pressure regulator valve is directed to the converter clutch apply valve. The converter clutch apply valve directs oil to the release side of the converter clutch. Converter return oil is directed to the transmission cooler by the converter clutch apply valve. Oil from the cooler is directed to the transmission lubrication system.

Oil is also directed from the pressure regulator valve to the pump slide to decrease pump output in relation to the combined pressure of M.T.V. oil and regulator valve spring force. Line pressure acts on the pressure relief valve which will exhaust any oil above 2,240 to 2,520 kPa (320 to 360 psi).

Line pressure at the manual valve is available for use in other drive ranges.

Line pressure at the T.V. limit valve is limited to 620 kPa (90 psi). This limited pressure is directed to the throttle valve where it is regulated to a variable pressure called throttle valve (T.V.) pressure. T.V. pressure increases with carburetor opening and is directed to the line bias, M.T.V. up and M.T.V. down valves.

At the line bias valve, T.V. pressure is modulated to M.T.V. pressure. M.T.V. pressure helps to control line pressure at the pressure regulator valve and accumulator pressure at the accumulator valve.

T.V. pressure at the M.T.V. up valve and M.T.V. down valve is available for use when accelerating in other ranges.

SUMMARY

The converter is filled from the release side; all clutches and the band are released. The manual linkage has the parking pawl engaged in the reaction internal gear lugs. At idle, there is not sufficient T.V. pressure to open the M.T.V. up or M.T.V. down valves.

LH0017-4L60

Figure 16 Park — Engine Running

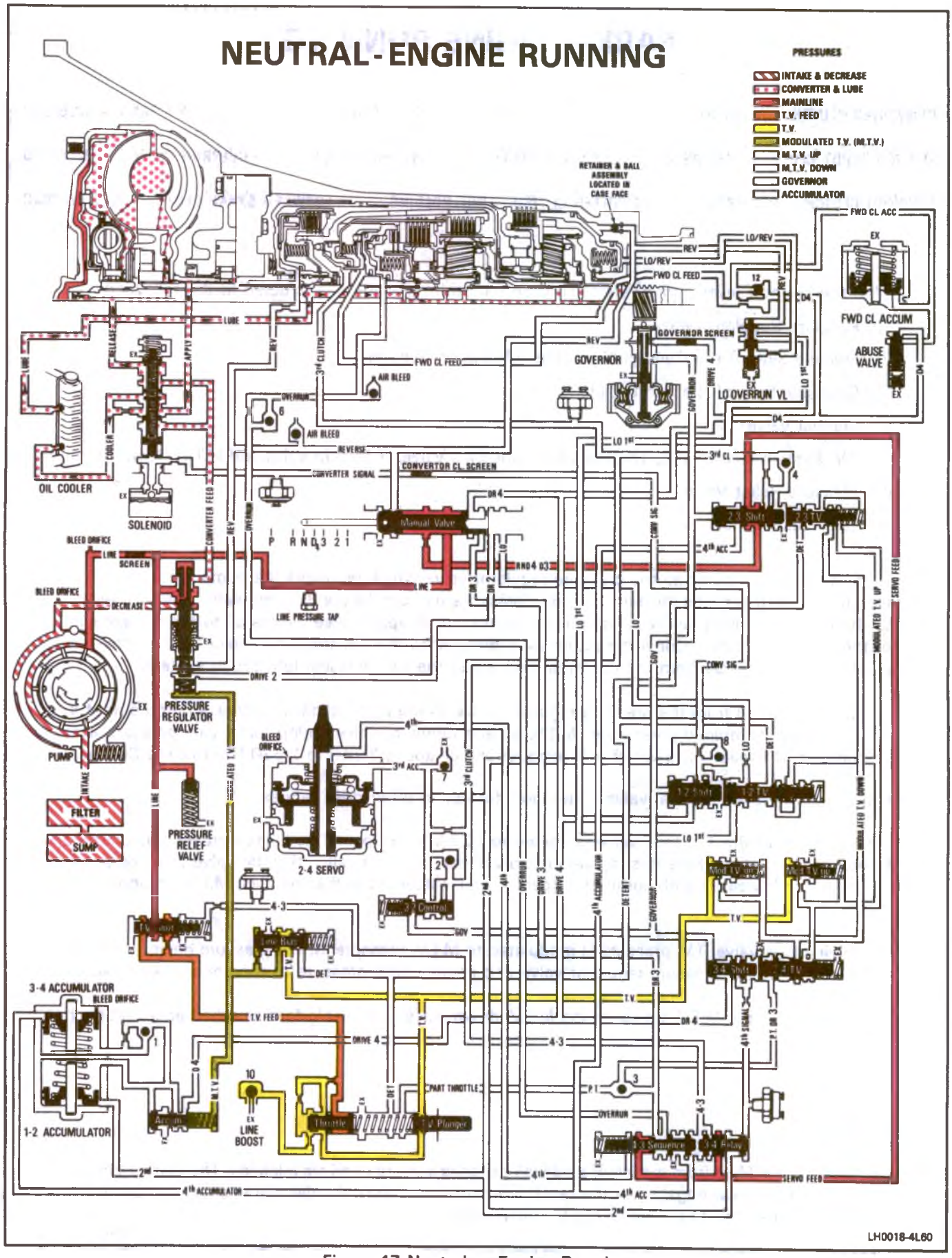

Figure 17 Neutral — Engine Running

NEUTRAL—ENGINE RUNNING

CONVERTER CLUTCH – RELEASED	3-4 CLUTCH – RELEASED	2-4 BAND – RELEASED
REVERSE INPUT CLUTCH – RELEASED	LO AND REVERSE CLUTCH – RELEASED	OVERRUN CLUTCH – RELEASED
FORWARD CLUTCH – RELEASED	LO ROLLER CLUTCH – NOT HOLDING	FORWARD SPRAG CLUTCH – NOT HOLDING

When the selector lever is moved to the Neutral (N) position, the line pressure is directed to the same areas as in Park, except in Neutral (N) the manual valve directs oil into the Reverse, Neutral, Drive 4, Drive 3 (RND4D3) oil is directed to the 2-3 shift valve which directs RND4D3 oil to the 3-4 relay valve through the servo feed passage. Oil at these valves is available for use in other ranges.

SUMMARY

The converter is filled from the release side; all clutches and the band are released. At idle, there is not sufficient T.V. pressure to open the M.T.V. up or M.T.V. down valves.

LH0019-4L60

Figure 18 Neutral — Engine Running

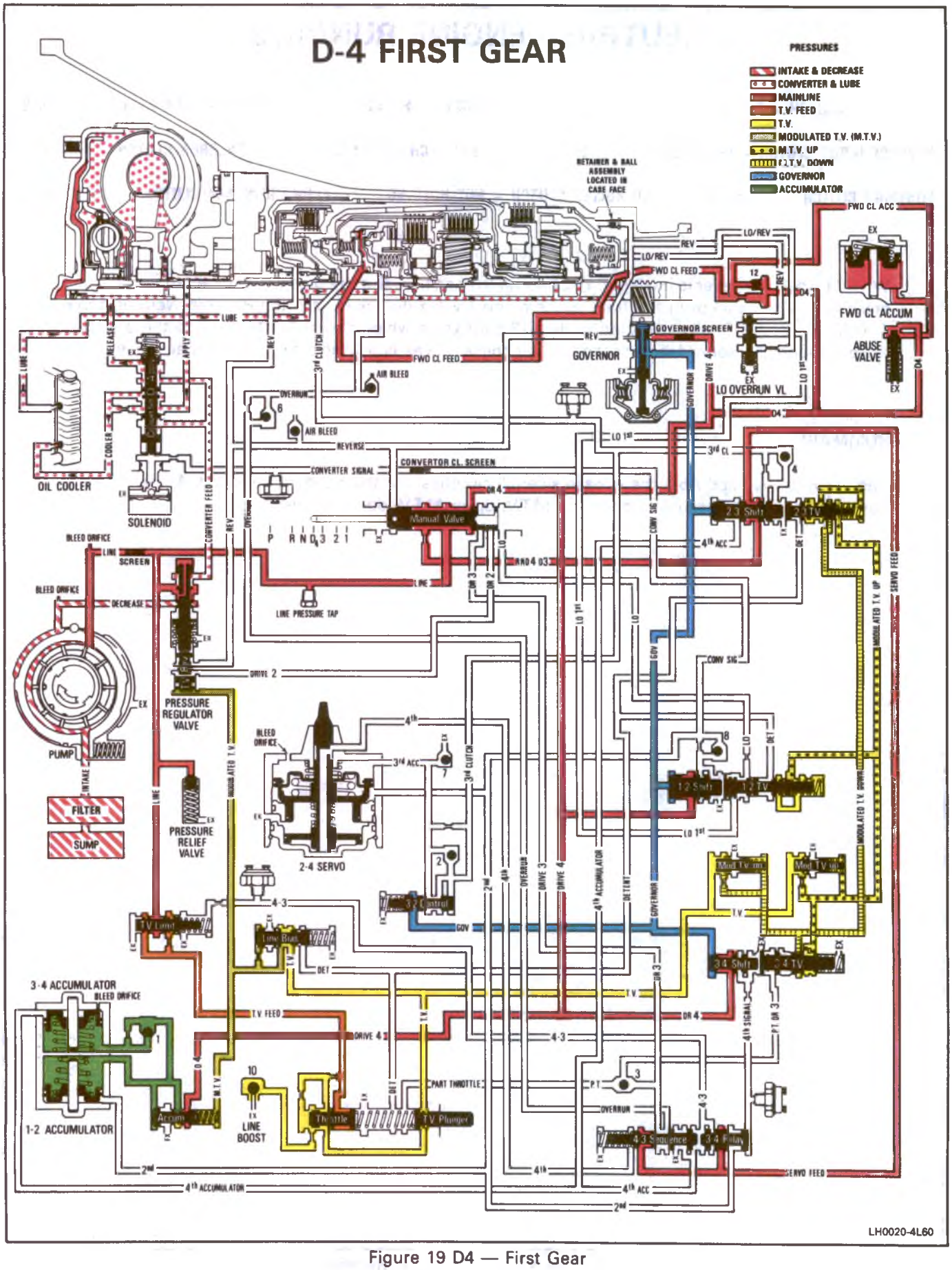

Figure 19 D4 — First Gear

D-4—FIRST GEAR

FORWARD CLUTCH – APPLIED **LO ROLLER CLUTCH – HOLDING** **FORWARD SPRAG CLUTCH – HOLDING**

When the selector lever is moved to the Drive (D) position, the manual valve is repositioned to allow line pressure to enter the Drive 4 (D4) passage. Drive 4 oil then flows to the following:

1. Forward Clutch Accumulator, Forward Clutch and Abuse Valve
2. Governor Valve
3. 1-2 Shift Valve
4. Accumulator Valve
5. 3-4 Shift Valve

BASIC CONTROL

Drive 4 oil is directed to the forward clutch accumulator where the #12 checkball seats, routing forward clutch feed through an orifice. This combines with the forward clutch accumulator to cushion the forward clutch apply.

During "Rock Cycle" conditions (stuck in mud or snow and "Rocking" out), an abuse valve routes D4 oil to forward clutch feed oil to quicken the apply of the forward clutch.

Drive 4 oil is directed to the 1-2 and 3-4 shift valves. Drive 4 oil is directed to the accumulator valve and is regulated to a pressure called accumulator pressure; this pressure is directed to the 1-2 and 3-4 accumulator pistons to act as a cushion for the band apply in second gear and overdrive.

Drive 4 oil is orificed into the governor passage, and is regulated to a variable pressure called governor pressure. Governor pressure increases with vehicle speed and acts against the 1-2, 2-3, 3-4, and the 3-2 control valve springs.

In first gear, there could be sufficient throttle valve plunger travel to increase T.V. pressure enough to open the M.T.V. up and the M.T.V. down valves. In first gear, M.T.V. up exerts pressure against governor pressure at the 1-2, 2-3, and 3-4 valves. M.T.V. down pressure is stopped by a land at the 2-3 and 3-4 throttle valves.

SUMMARY

The converter clutch is released, the forward sprag clutch is holding, the forward clutch is applied; the transmission is in Drive (D) Range — First Gear.

LHOO21-4L60

Figure 20 D4 — First Gear

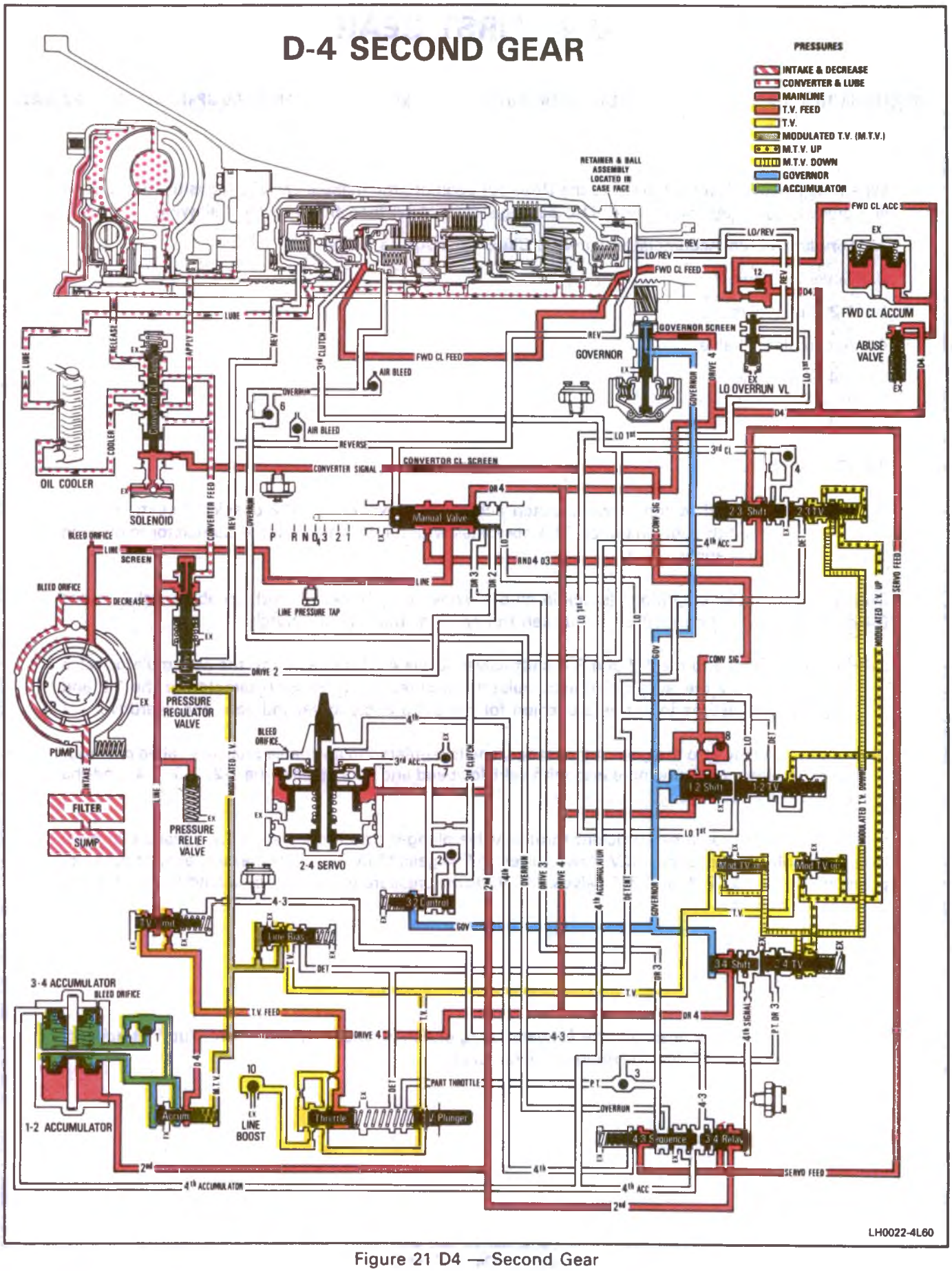

Figure 21 D4 — Second Gear

D-4—SECOND GEAR

2-4 BAND – APPLIED **FORWARD SPRAG CLUTCH – HOLDING** **FORWARD CLUTCH – APPLIED**

As both vehicle speed and governor pressure increase, the force of the governor oil acting on the 1-2 shift valve overcomes the pressure of M.T.V. up oil and the force of the 1-2 throttle valve spring. This allows the 1-2 shift valve to open and Drive 4 (D4) oil to enter the second (2nd) oil passage. This oil is called second (2nd) oil. Second oil from the 1-2 shift valve is directed to the following:

1. 1-2 Shift Checkball (8)
2. 2-4 Servo
3. 1-2 Accumulator Piston
4. Solenoid Assembly (Converter Clutch)
5. 3-4 Relay Valve

BASIC CONTROL

Second oil from the 1-2 shift valve will seat the 1-2 shift checkball (8) forcing 2nd oil through an orifice. Second oil is then directed to the 2-4 servo to apply the 2-4 band. At the same time, 2nd oil moves the 1-2 accumulator piston against accumulator pressure and the accumulator spring to maintain a controlled build-up of pressure on the servo during the 1-2 shift for a smooth band apply. 2nd oil at the 3-4 relay valve is available for use in other ranges.

Second oil is rerouted into converter clutch signal oil above the 1-2 shift valve. Converter signal oil exhausts at this solenoid until a signal is received from the vehicles E.C.M.

SUMMARY

The converter clutch is released, the 2-4 band is applied, the forward clutch is applied, and the forward sprag clutch is holding; the transmission is in Drive (D) Range — Second Gear.

LH0023-4L60

Figure 22 D4 — Second Gear

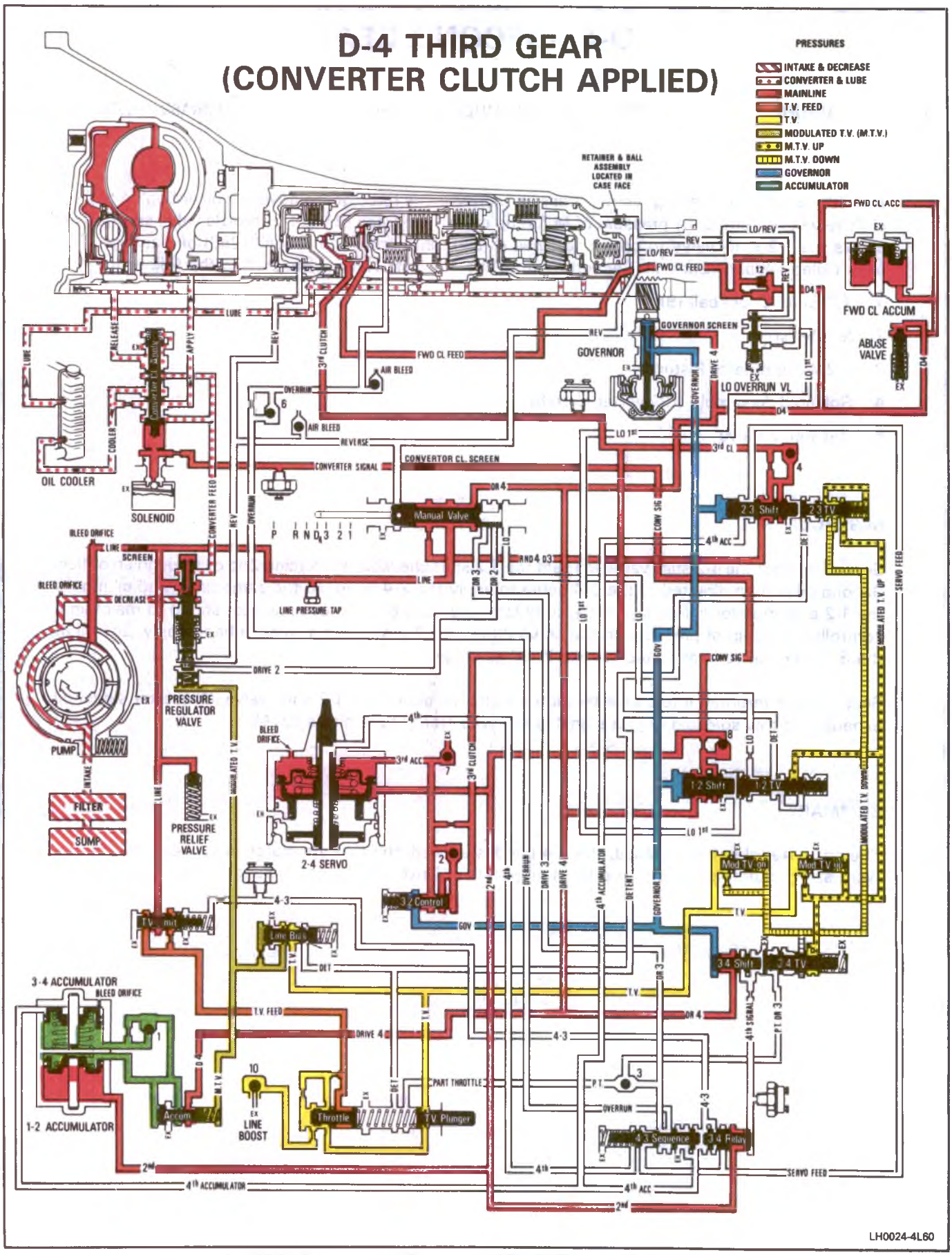

Figure 23 D4 — Third Gear — Converter Clutch Applied

D-4—THIRD GEAR

(Converter Clutch Applied)

CONVERTER CLUTCH – APPLIED

FORWARD CLUTCH – APPLIED

FORWARD SPRAG CLUTCH – HOLDING

3-4 CLUTCH – APPLIED

As both vehicle speed and governor pressure increase, the force of governor oil acting on the 2-3 shift valve overcomes the force of the 2-3 T.V. spring and M.T.V. up oil. This allows the 2-3 shift valve to open and allows RND4D3 oil to enter the 3rd clutch passage.

Third clutch oil from the 2-3 shift valve is directed to the following:

1. 3-2 Exhaust Checkball (4)
2. 3-4 Clutch Piston
3. Third Clutch Accumulator Checkball (2)
4. Third Accumulator Exhaust Checkball (7)
5. 2-4 Servo (Release Side)
6. 3-2 Control Valve

BASIC CONTROL

Third clutch oil from the 2-3 shift valve flows past the 3-2 exhaust checkball (4), to the 3-4 clutch piston. At the same time, third clutch oil is directed past the third clutch accumulator checkball (2), seats the third accumulator exhaust check ball (7), and then into the release side of the 2-4 servo. This third clutch accumulator pressure combined with the servo cushion spring, moves the second apply piston, in the 2-4 servo, against second oil and acts as an accumulator for a smooth 2-4 band release and 3-4 clutch apply.

Third clutch oil is present at the 3-2 control valve in preparation of a third gear to second gear shift.

Once the solenoid receives a signal from the vehicles controls and solenoid is on, converter clutch signal oil will shift the converter clutch apply valve, and redirect converter feed oil into the apply passage. The apply oil flows between the stator shaft and converter hub to charge the converter with oil and push the converter pressure plate against the converter cover, causing a mechanical link between the engine and the turbine shaft. The rate of apply is controlled by the orifice checkball capsule in the end of the turbine shaft.

At the same time the converter clutch apply valve will direct converter feed oil through an orifice to the transmission cooler. Cooler oil is directed to the transmission lubrication system.

SUMMARY

The converter clutch is applied*, the forward clutch is applied, the forward sprag clutch is holding, the 3-4 clutch is applied and the 2-4 band is released; the transmission is in Drive (D) Range — Third Gear (direct drive).

*The converter clutch may or may not be applied, depending on shift calibration and solenoid cperation.

LH0025-4L60

Figure 24 D4 — Third Gear — Converter Clutch Applied

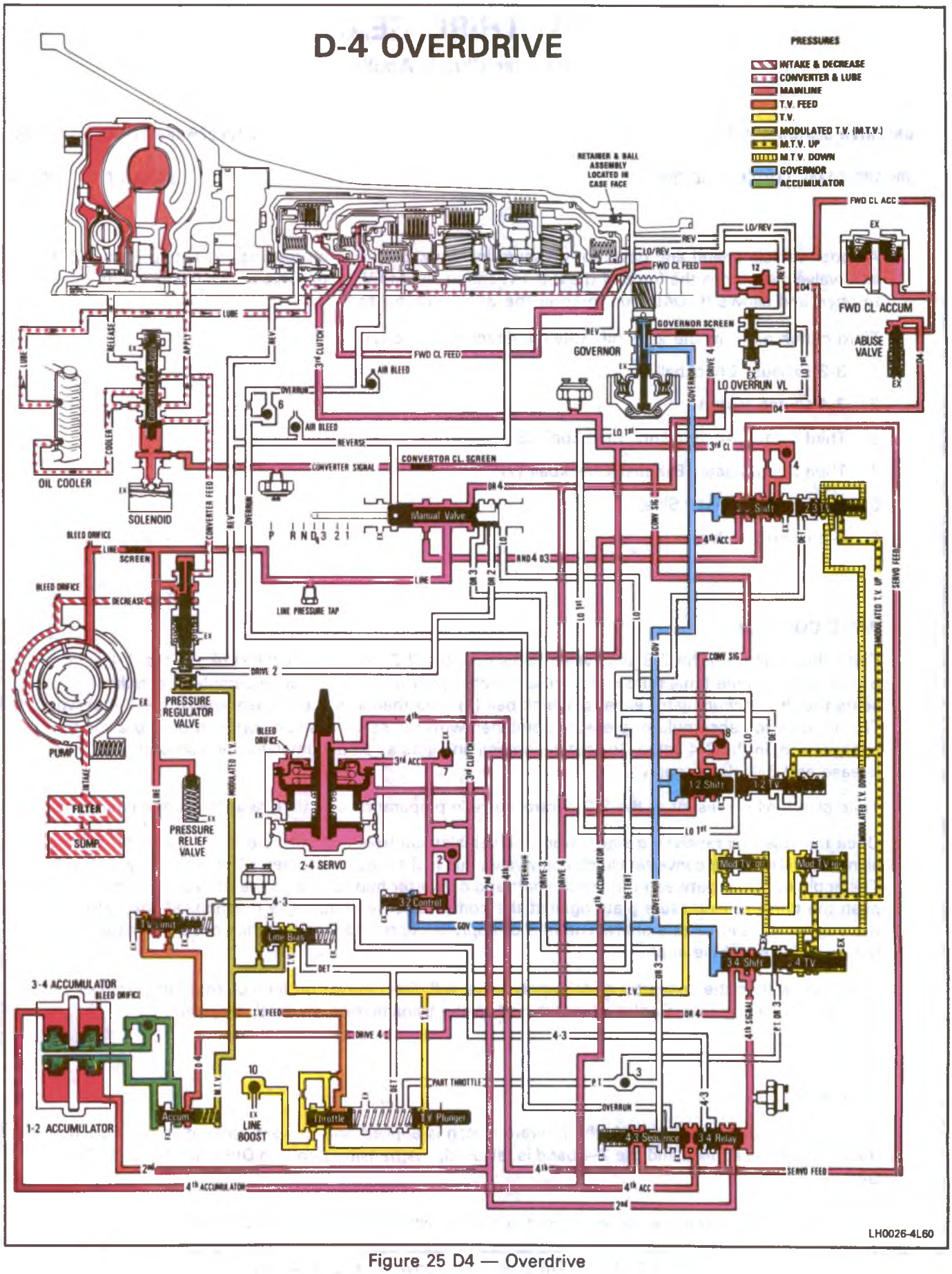

Figure 25 D4 — Overdrive

D-4—OVERDRIVE

CONVERTER CLUTCH – APPLIED
FORWARD CLUTCH – APPLIED

3-4 CLUTCH – APPLIED

2-4 BAND – APPLIED
FORWARD SPRAG CLUTCH – NOT HOLDING

As both vehicle speed and governor pressure increase, the force of governor oil acting on the 3-4 shift valve overcomes the force of the 3-4 T.V. spring and M.T.V. up oil. This opens the 3-4 shift valve sending Drive 4 (D4) into the fourth signal passage. Fourth signal oil will overcome the 4-3 sequence valve spring and open the 3-4 relay and the 4-3 sequence valves, allowing second oil to enter the servo feed passage.

Servo feed oil is directed to the following:

1. 2-3 Shift Valve
   a. Which directs oil to the:
      1) 3-4 Accumulator
      2) 4-3 Sequence Valve
2. 4-3 Sequence Valve
   a. Which directs oil to the:
      1) 4th Apply Piston (in the 2-4 servo)

BASIC CONTROL

Servo feed oil passes through the 4-3 sequence valve and becomes fourth oil. Fourth oil then enters the 2-4 servo, applies pressure on the fourth apply piston, and applies the 2-4 band.

SUMMARY

The converter clutch*, 2-4 band, forward clutch, the 3-4 clutch are applied, and the forward sprag clutch is overrunning; the transmission is in Drive (D) Range — Overdrive.

*The converter clutch may or may not be applied, depending on solenoid operation.

LH0027-4L60

Figure 26 D4 — Overdrive

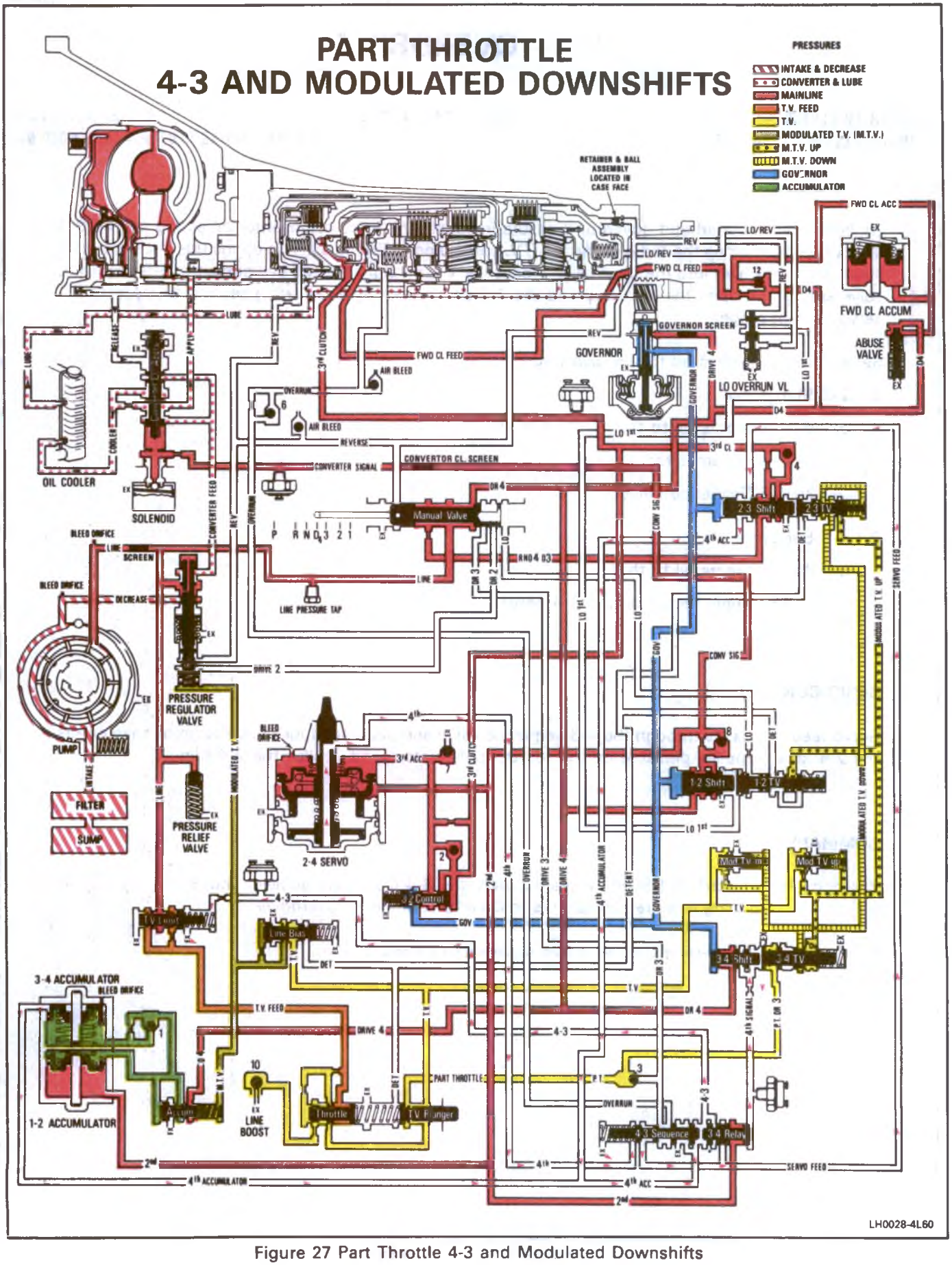

Figure 27 Part Throttle 4-3 and Modulated Downshifts

PART THROTTLE 4-3 AND MODULATED DOWNSHIFTS

(Valves In Third Gear Position)

CONVERTER CLUTCH – APPLIED*
FORWARD SPRAG CLUTCH – HOLDING

FORWARD CLUTCH – APPLIED
3-4 CLUTCH – APPLIED

A part throttle 4-3 downshift can be accomplished by depressing the accelerator pedal far enough to move the throttle valve (T.V.) plunger to allow the T.V. oil to enter the part throttle (P.T.) passage. This oil, called part throttle (P.T.) oil, is then routed to the 3-4 throttle valve.

Part throttle oil and the 3-4 throttle valve spring force will close the 3-4 shift valve against governor pressure, shutting off D4 oil to the fourth signal passage. Fourth accumulator oil will push the 3-4 relay valve closed and hold the 4-3 sequence valve open while it exhausts at an orifice at the T.V. limit valve. Fourth oil will pass through the 4-3 sequence valve to the servo feed passage to the 2-3 shift valve to the fourth accumulator passage. When fourth accumulator pressure is low enough, the 4-3 sequence valve spring will close the 4-3 sequence valve and the remaining fourth and fourth accumulator oil will exhaust at the 4-3 sequence valve.

A type of part throttle downshift can be accomplished in some ranges (4-3, and 3-2, shifts) by depressing the accelerator pedal far enough to raise M.T.V. down pressure. This pressure when combined with the throttle valve spring pressure can overcome governor pressure and cause a modulated downshift.

*The converter clutch will be released for the 4-3 downshift and may or may not be reapplied depending on shift calibration and solenoid operation.

LHOO29-4L60

Figure 28 Part Throttle 4-3 and Modulated Downshifts

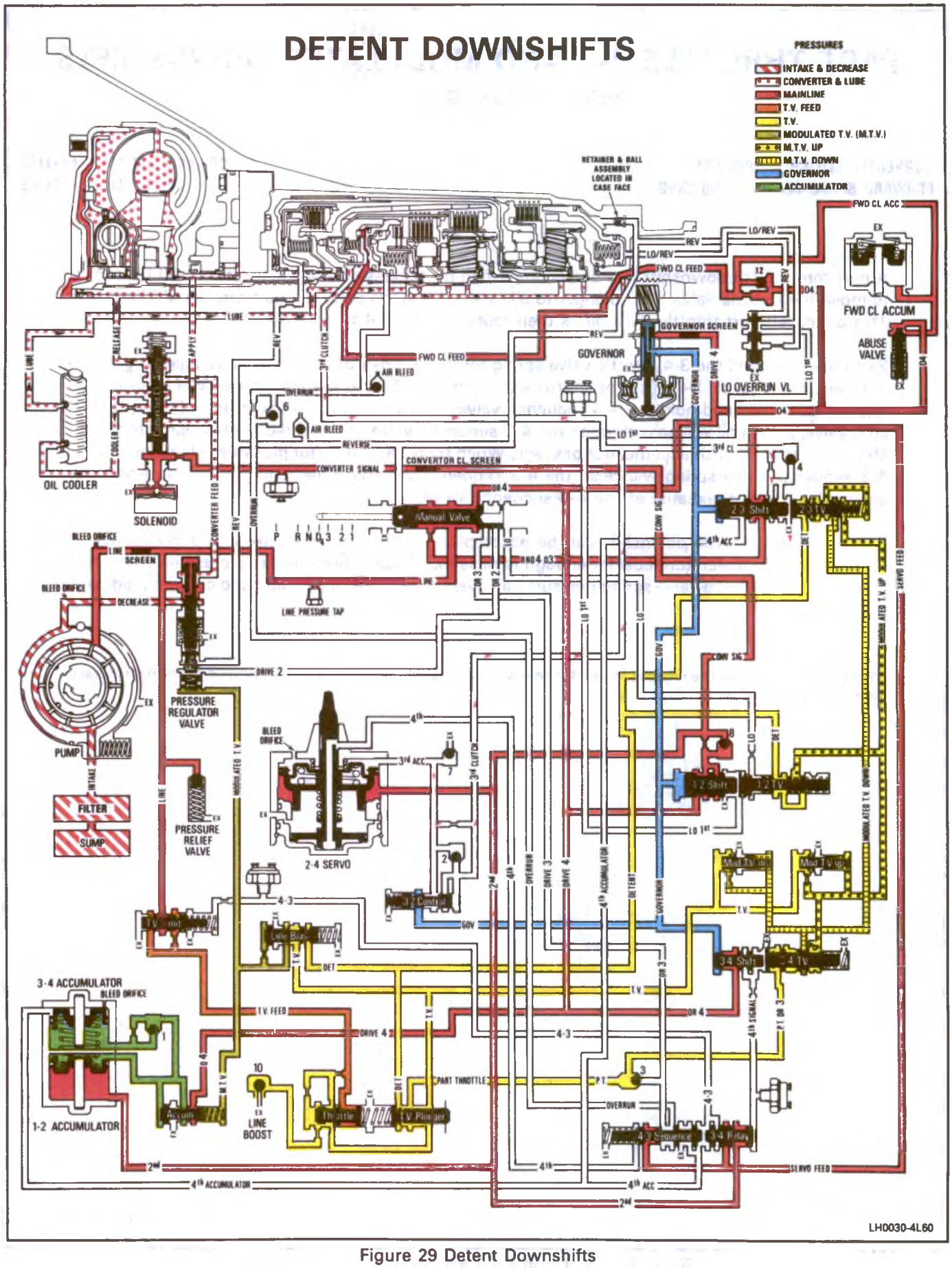

Figure 29 Detent Downshifts

DETENT DOWNSHIFTS

(Valves In Second Gear Position)

CONVERTER CLUTCH – RELEASED

2-4 BAND – APPLIED

FORWARD CLUTCH – APPLIED

FORWARD SPRAG CLUTCH – HOLDING

While operating at speeds below approximately 60 mph (96 km/h), a forced or detent 3-2 downshift is possible by depressing the accelerator pedal fully. This will position the throttle valve (T.V.) plunger to allow T.V. oil to enter the detent passage. This oil, called detent oil, is then routed to the following:

1. Line Bias Valve
2. 2-3 Throttle Valve
3. 1-2 Throttle Valve
4. Converter Clutch Throttle Valve (Non E.C.M. Controlled Vehicles Only)

Detent oil from the T.V. plunger flows to the line bias valve to boost modulated T.V. (M.T.V.) pressure. M.T.V. oil acting on the T.V. boost valve will boost line pressure approximately 70 kPa (10 psi).

The E.C.M. will discontinue the signal provided to the solenoid to release the converter clutch.

Detent oil from the T.V. plunger flows to the 2-3 throttle valve. Detent and M.T.V. down oil, acting on separate areas of the 2-3 throttle valve, will close the 2-3 shift valve against governor oil and allow 3rd clutch and 3rd accumulator oil to pass through an orifice and exhaust at the 2-3 shift valve.

At vehicle speeds above approximately 50 mph (80 km/h), governor oil acting on the 3-2 control valve will close it. Now the exhausting 3rd clutch accumulator oil from the intermediate servo will seat the 3rd clutch accumulator checkball (2) and flow through another orifice controlling the intermediate band apply for a smooth 3-2 shift at high speed.

A detent 2-1 downshift can be accomplished at speeds below approximately 30 mph (48 km/h), because detent oil pressure and the 1-2 spring force acting on the 1-2 throttle valve will close the 1-2 shift valve, shifting the transmission to first gear.

LH0031-4L60

Figure 30 Detent Downshifts

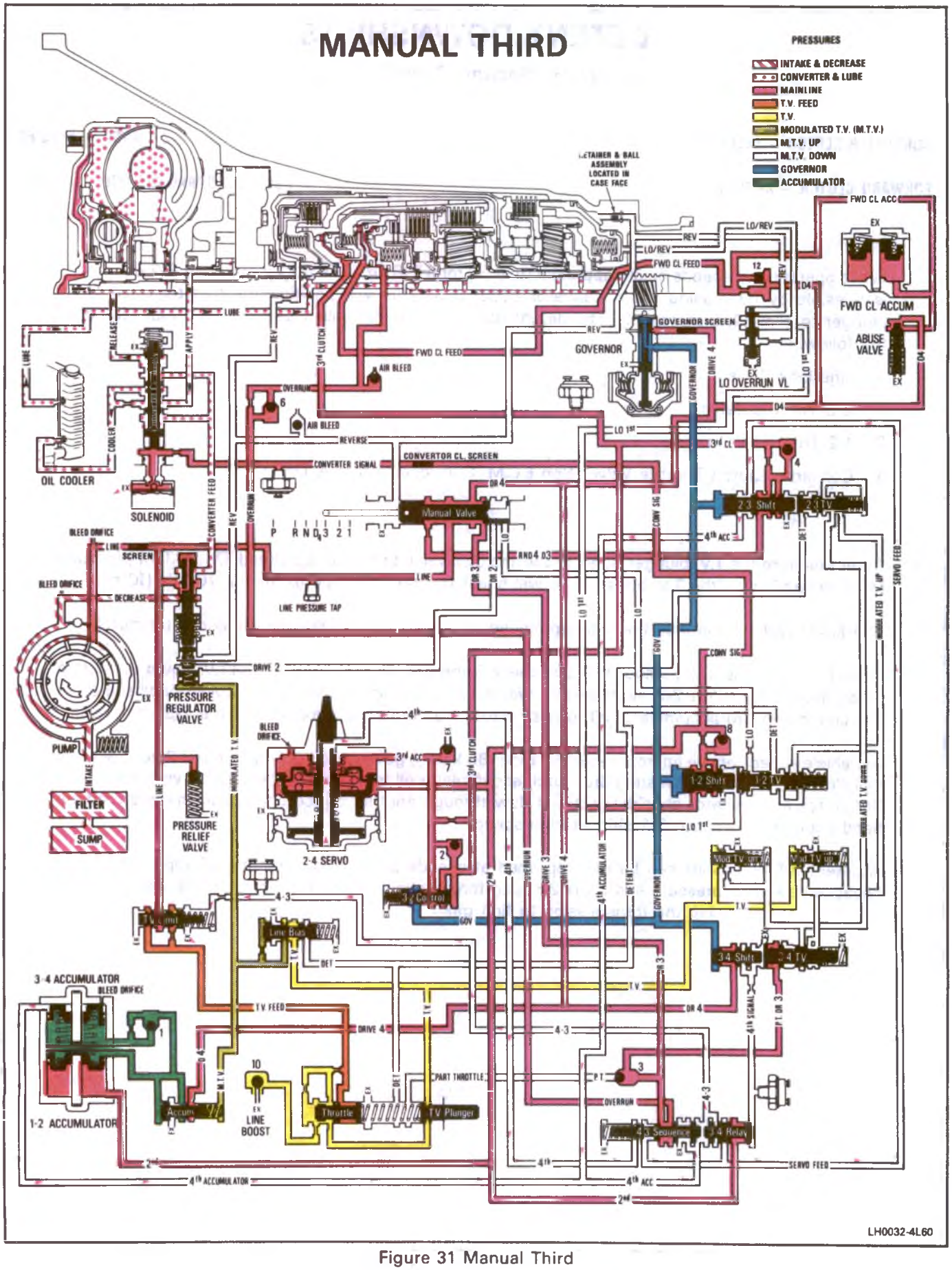

Figure 31 Manual Third

MANUAL THIRD

CONVERTER CLUTCH – RELEASED*

OVERRUN CLUTCH – APPLIED

FORWARD CLUTCH – APPLIED

3-4 CLUTCH – APPLIED

A forced 4-3 downshift can be accomplished by moving the selector lever from Drive (D) Range to Third (3rd) Gear. When the selector lever is moved to the Third (3rd) Gear position, D3 oil from the manual valve is directed to the following:

1. 4-3 Sequence Valve
2. Part Throttle and Drive 3 (D3) Checkball (3)
3. 3-4 Shift Valve

D3 oil will close the 3-4 shift valve and allow the 4th signal oil to exhaust.

D3 oil combined with the 4-3 sequence valve spring force will close the 4-3 sequence valve to allow the fourth and fourth accumulator oil to exhaust and release the band. D3 oil then flows into the overrun clutch passage where it applies the overrun clutch to keep the forward sprag clutch from overrunning when engine braking is needed.

The forward and 3-4 clutches are applied. The 2-4 band is released. The transmission is in Manual Third, direct drive. The overrun clutch is applied to allow engine braking.

In manual 3rd, the converter is shown released, and there is no M.T.V. up or M.T.V. down pressure. This is assuming the throttle is released. If the throttle is opened sufficiently, the E.C.M. could signal the solenoid to apply the converter clutch and the M.T.V. up and M.T.V. down valves could open.

*The converter clutch may or may not be applied, depending on shift calibration and solenoid operation.

LH0033-4L60

Figure 32 Manual Third

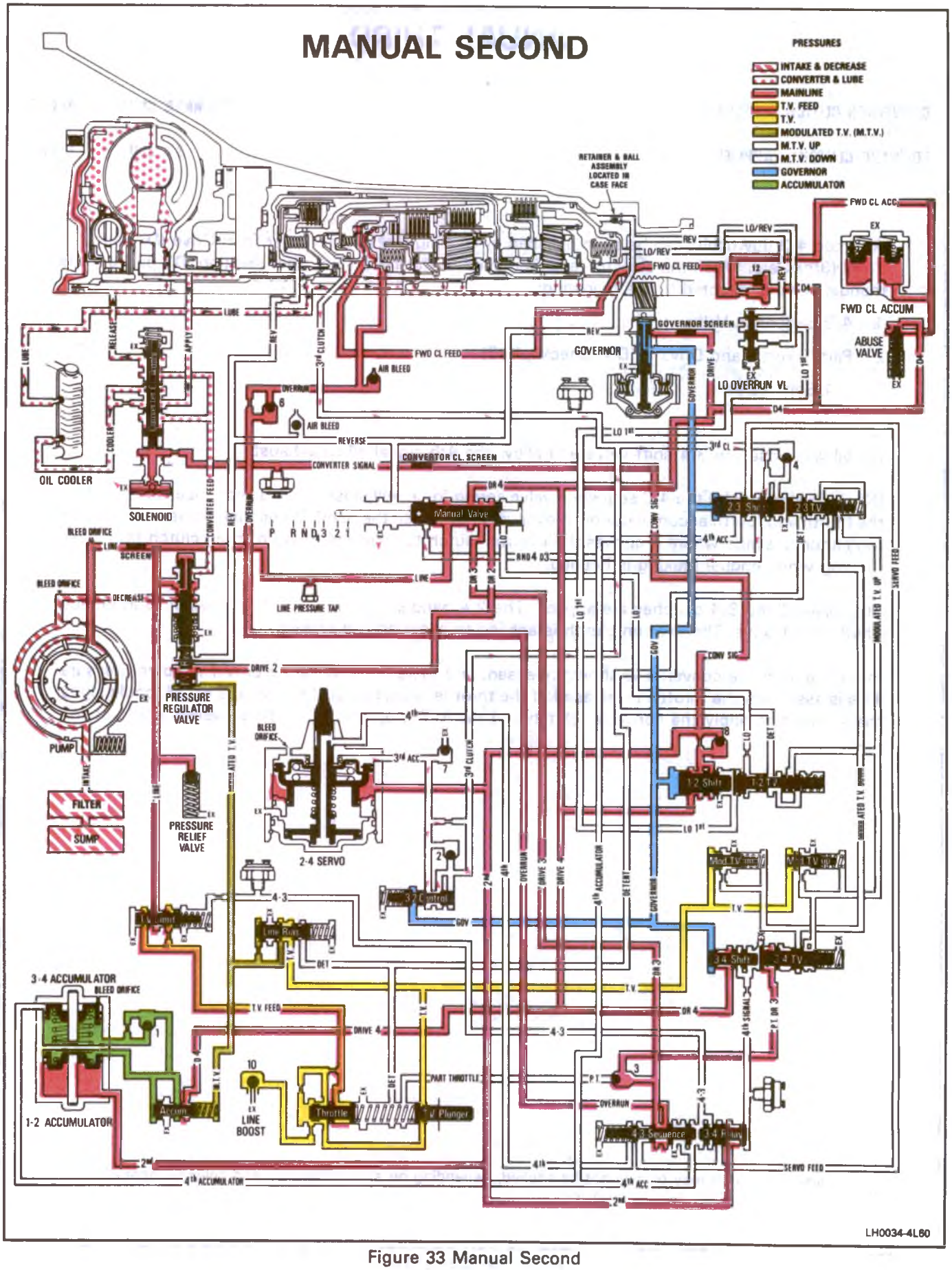

Figure 33 Manual Second

MANUAL SECOND

CONVERTER CLUTCH – RELEASED*

2-4 BAND – APPLIED

OVERRUN CLUTCH – APPLIED

FORWARD CLUTCH – APPLIED

A forced 3-2 downshift can be accomplished by moving the selector lever from Third (3rd) Gear to Second (2nd) Gear position.

When the selector lever is moved to the Second (2nd) Gear position, RND4D3, 3rd clutch, and 3rd accumulator oil will exhaust at the manual valve. With no pressure to apply the 3-4 clutch, or release the 2-4 band, the transmission will shift to second gear.

The manual valve will also direct line pressure into the D2 passage. Drive 2 (D2) oil will act on the reverse boost valve to boost line pressure to 1206 kPa (175 psi) which is required to prevent the 2-4 band and forward clutch from slipping.

SUMMARY

The forward clutch and 2-4 band are applied. The transmission is in second gear. Also, the overrun clutch is still applied to allow engine braking when needed.

*The converter clutch may or may not be applied, depending on shift calibration and solenoid operation.

LH0035-4L60

Figure 34 Manual Second

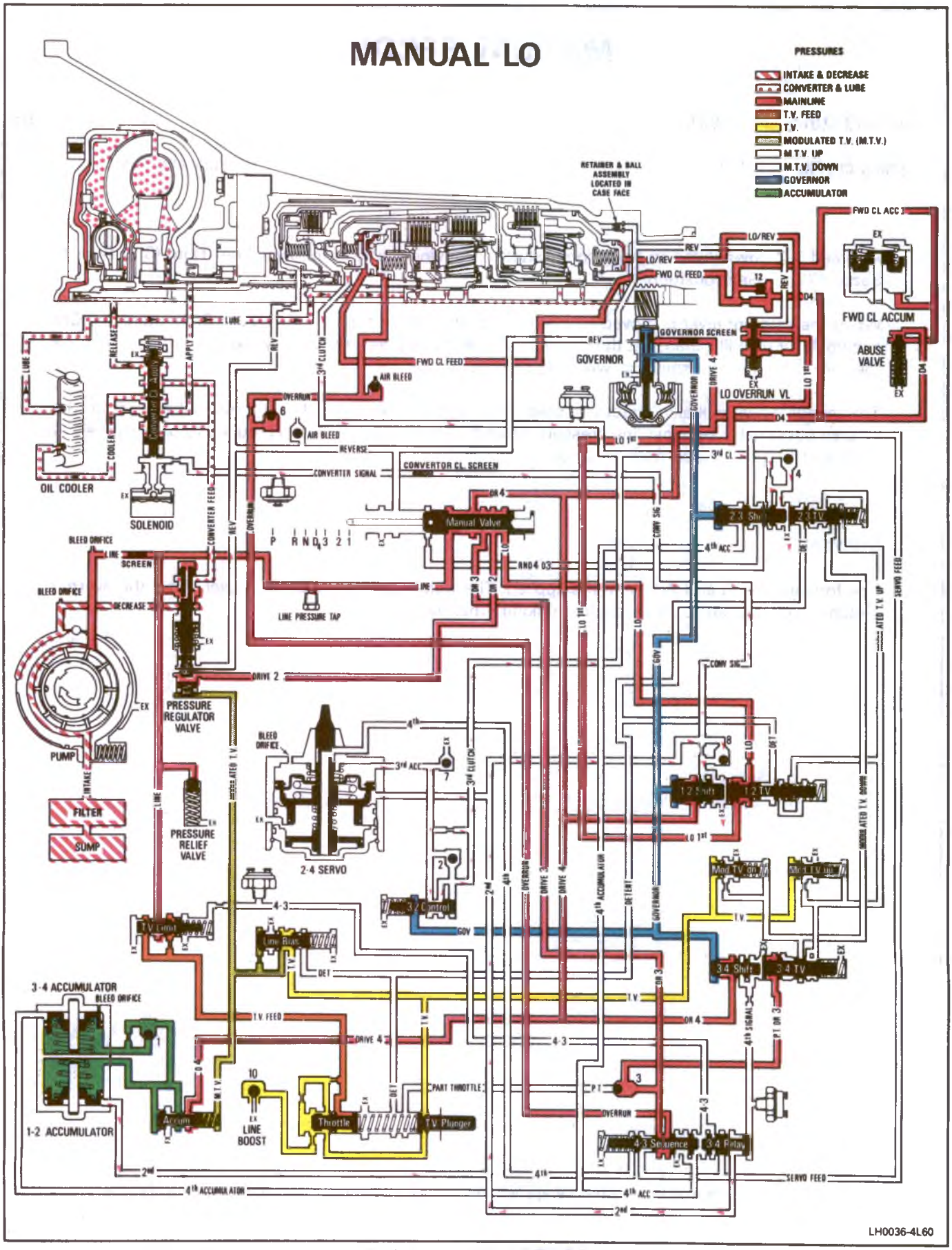

Figure 35 Manual Lo

MANUAL LO

CONVERTER CLUTCH – RELEASED

OVERRUN CLUTCH – APPLIED

FORWARD CLUTCH – APPLIED

LO ROLLER CLUTCH – APPLIED

Maximum downhill braking can be obtained at speeds below 30 mph (48 km/h) with the selector in Lo (1st) range. Lo/1st oil pressure, which is 1206 kPa (175 psi), is the same as second (2nd) oil pressure because second (D2) oil is still present.

Lo oil from the manual valve is directed to the following:

1. 1-2 Shift Valve Train
2. Lo and Reverse Clutch
3. Lo Overrun Valve

Lo oil at the 1-2 T.V. valve combined with the 1-2 throttle valve spring force will close the 1-2 shift valve at speeds approximately 35 mph (56 km/h) or below. This allows 2nd oil to exhaust, releasing the 2-4 band, and lo oil to apply the lo and reverse clutch.

Lo/1st oil coming off the 1-2 T.V. valve is directed toward the lo overrun valve that regulates lo/reverse oil. This smoothes the 2-1 manual downshift for maximum engine braking.

SUMMARY

The forward clutch is applied. The lo and reverse, and the overrun clutch are applied to allow engine braking. The 2-4 band is released, the transmission is in Lo Range — First Gear.

LH0037-4L60

Figure 36 Manual Lo

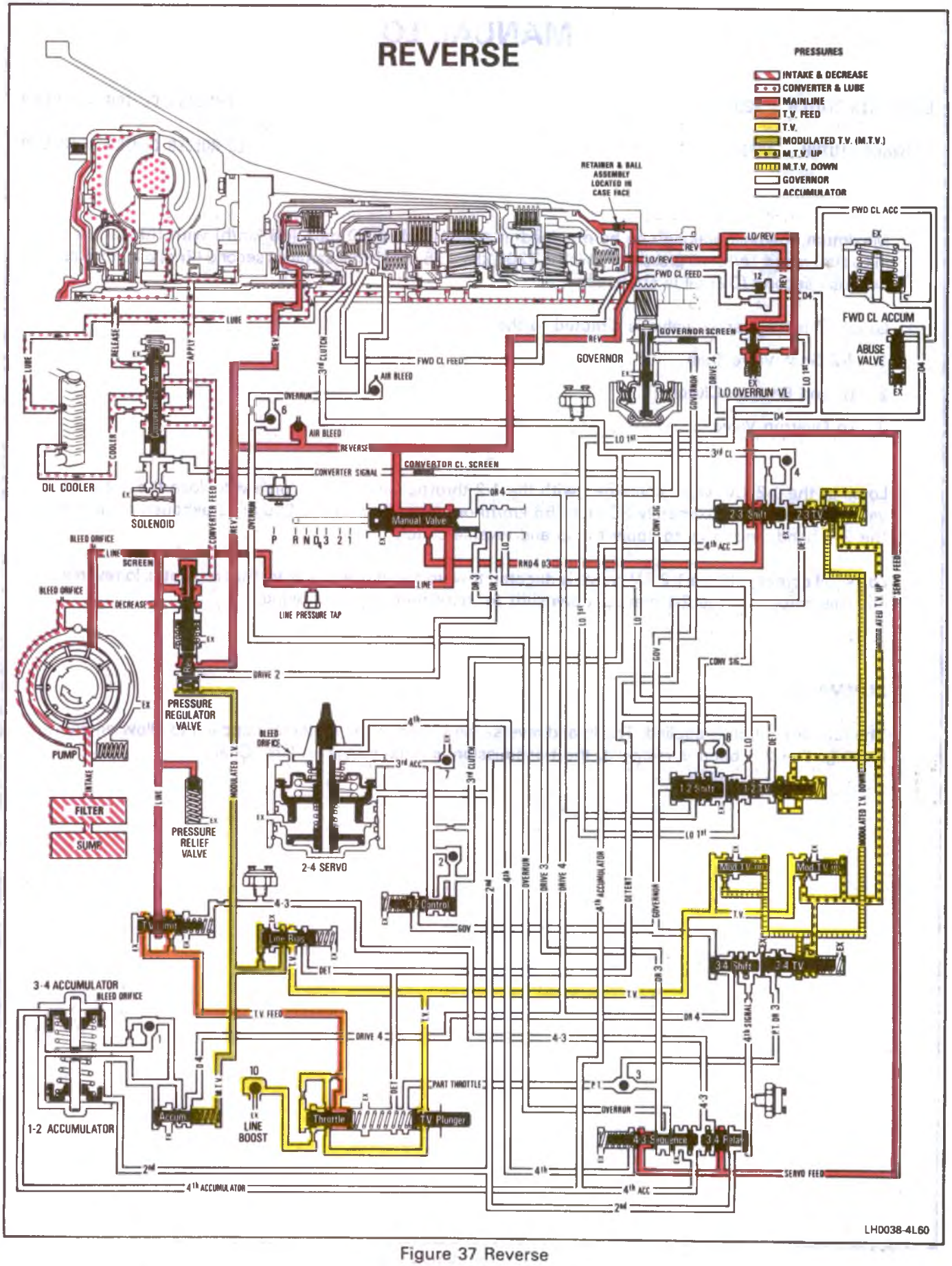

Figure 37 Reverse

REVERSE

REVERSE INPUT CLUTCH – APPLIED

LO AND REVERSE CLUTCH – APPLIED

When the selector lever is moved to the Reverse (R) position, the manual valve is repositioned to allow line pressure to enter the reverse passage which directs oil to the following:

1. Lo and Reverse Clutch
2. Reverse Input Clutch
3. Reverse Boost Valve
4. Lo Overrun Valve

Reverse oil is orificed at the retainer and ball assembly, and regulated at the lo overrun valve to apply the lo and reverse clutch.

Reverse oil is orificed into the reverse input clutch and orificed out of the reverse input piston for a smooth apply of the reverse input clutch during the shift.

Reverse oil acting on the reverse boost valve in the pressure regulator will boost line pressure to approximately 670 kPa (100 psi). M.T.V. oil from the line bias valve acting on the T.V. boost valve, in the pressure regulator, will further boost line pressure from 670 kPa (100 psi) at idle to 1690 kPa (245 psi) at full throttle.

SUMMARY

The reverse input clutch is applied. The lo and reverse clutch is applied. The transmission is in Reverse (R).

LH0039-4L60

Figure 38 Reverse

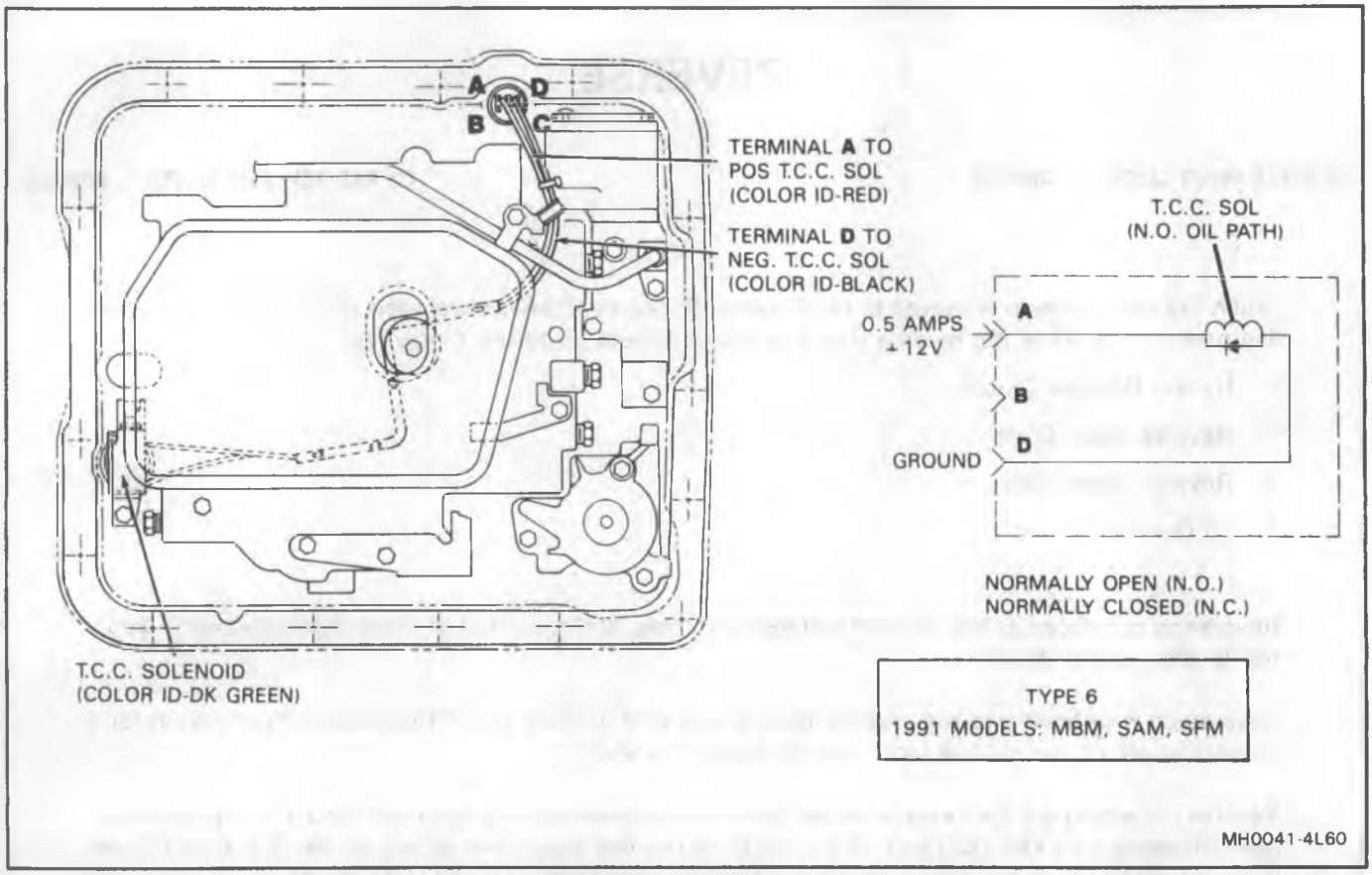

Figure 39 Wiring Diagram — Type 6

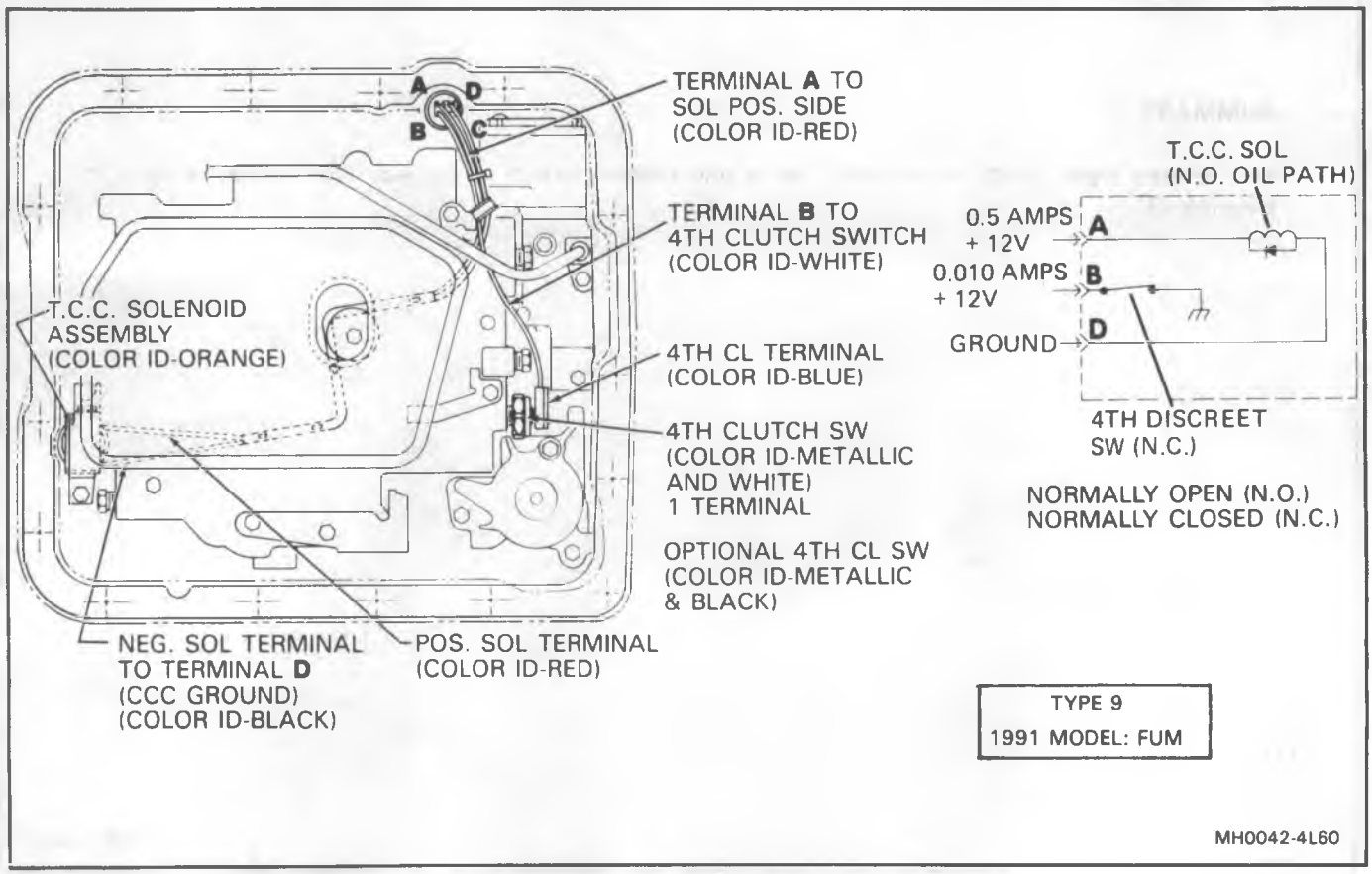

Figure 40 Wiring Diagram — Type 9

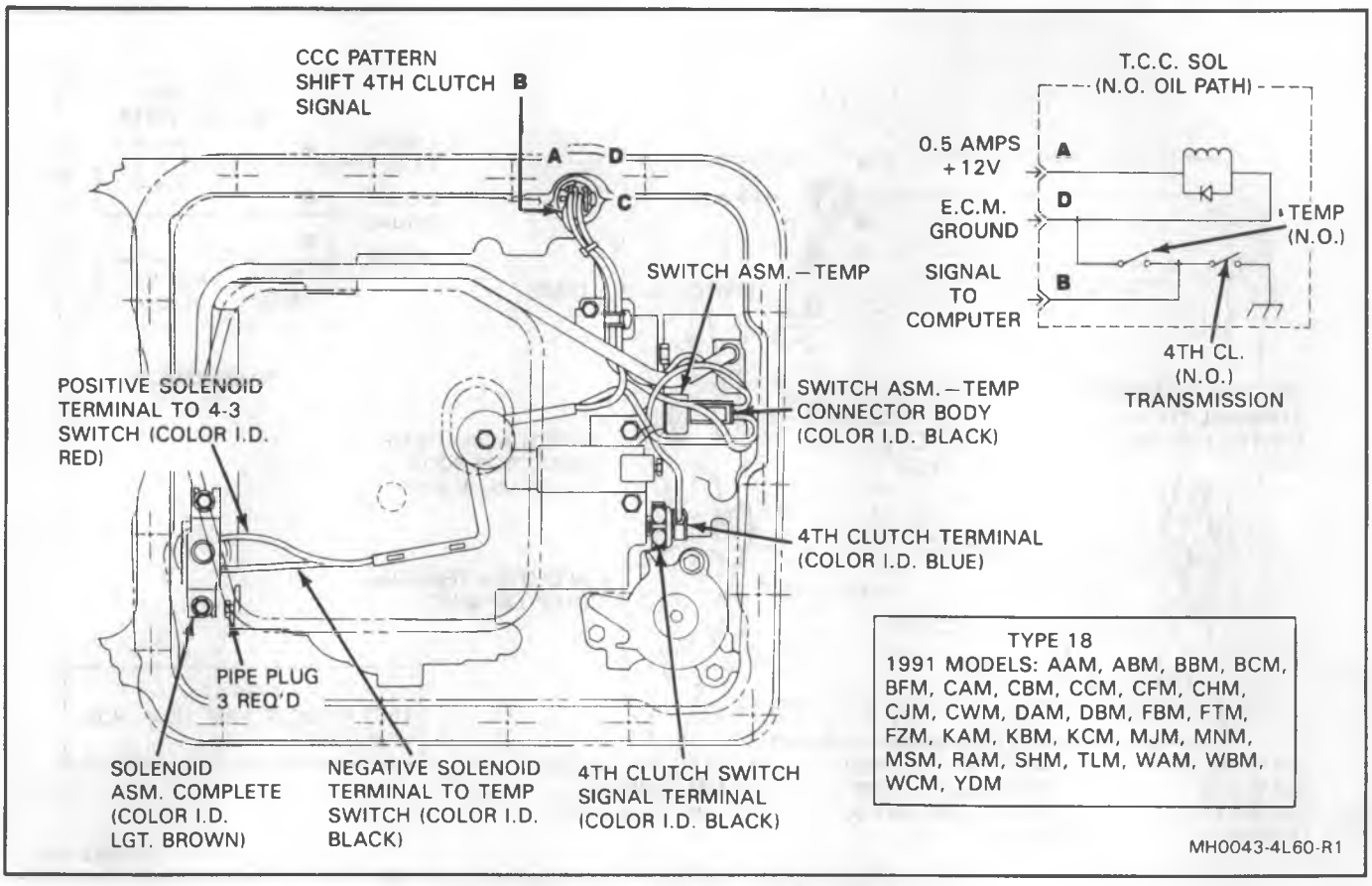

Figure 41 Wiring Diagram — Type 18

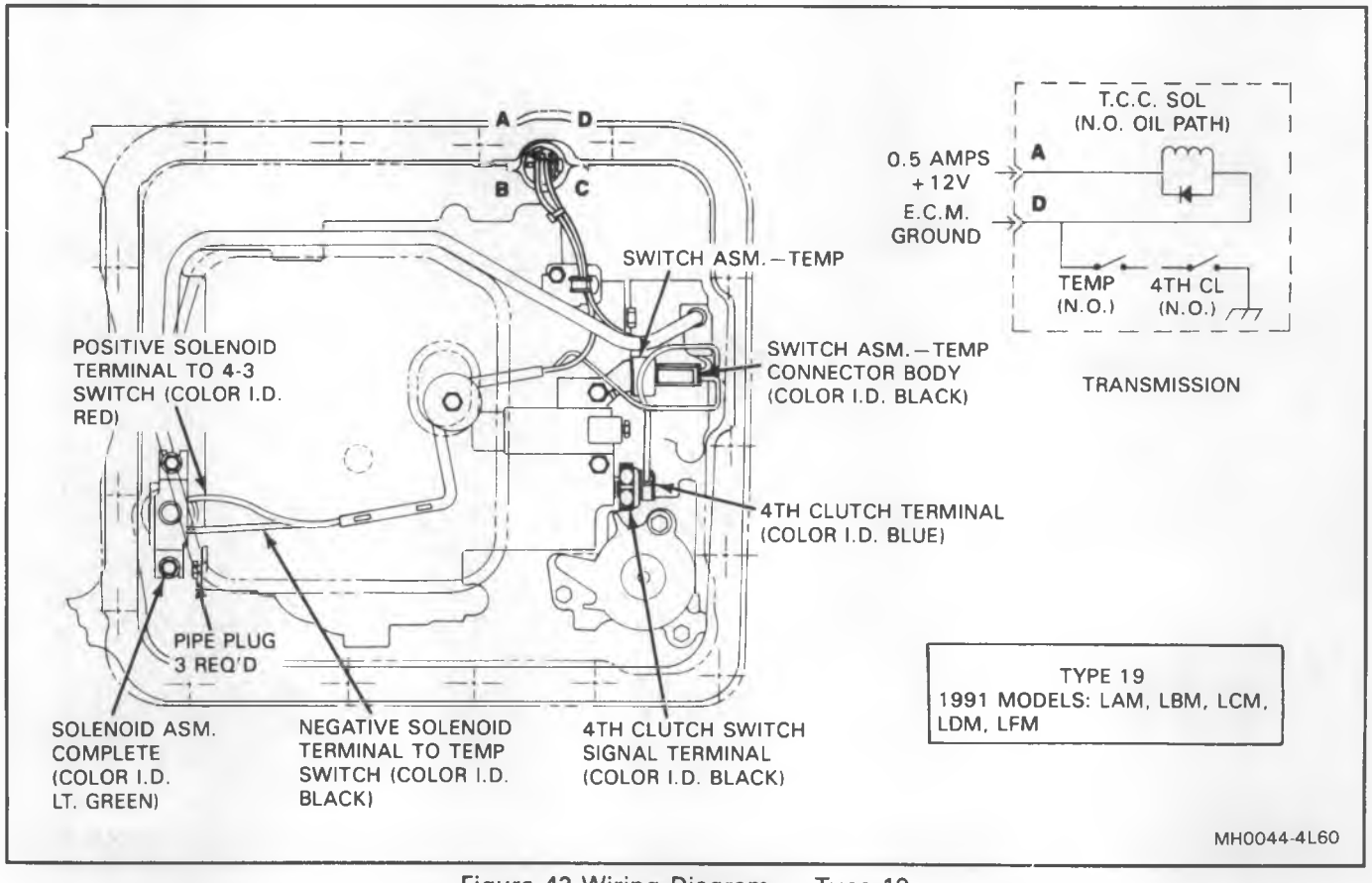

Figure 42 Wiring Diagram — Type 19

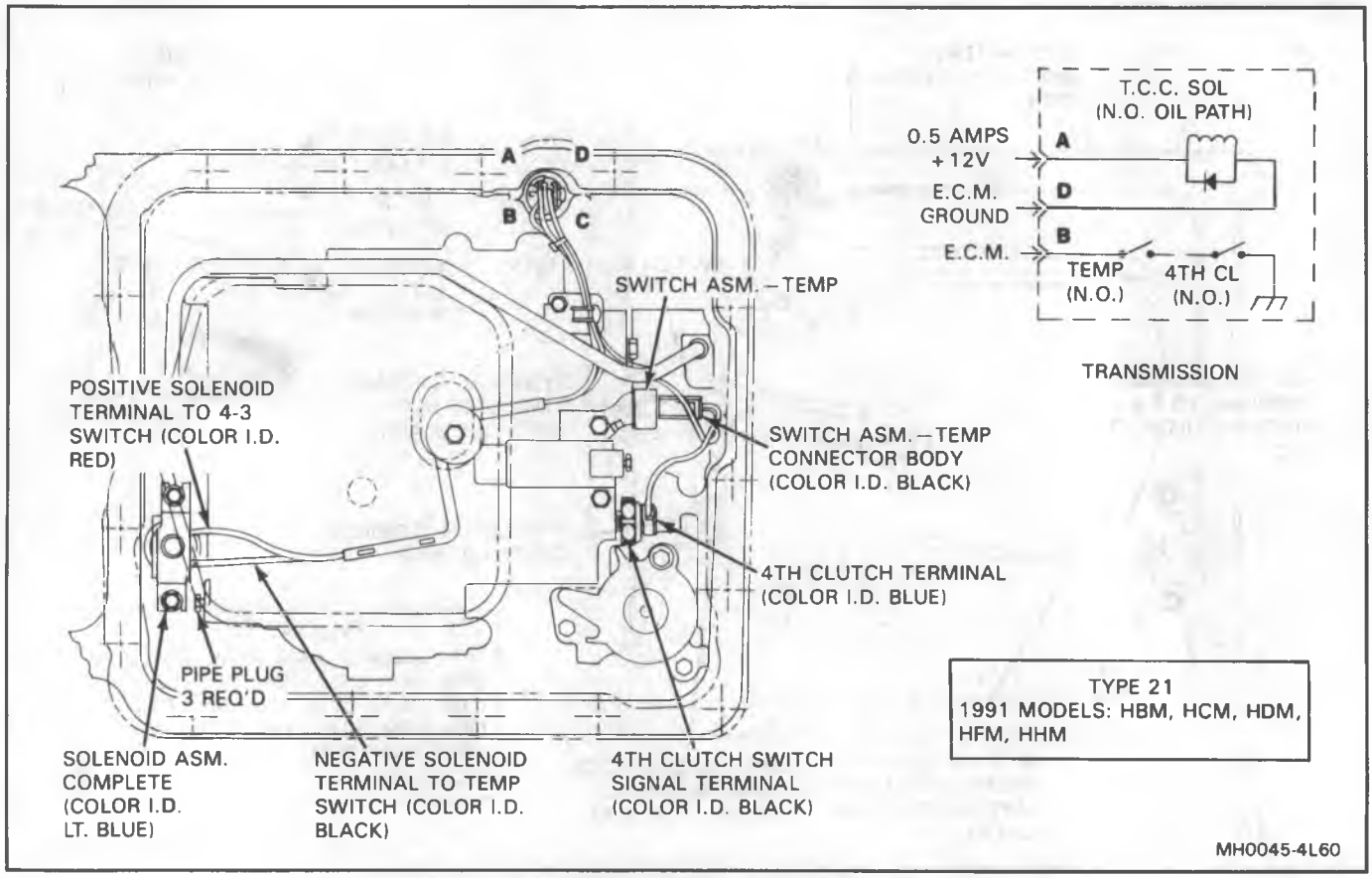

Figure 43 Wiring Diagram — Type 21

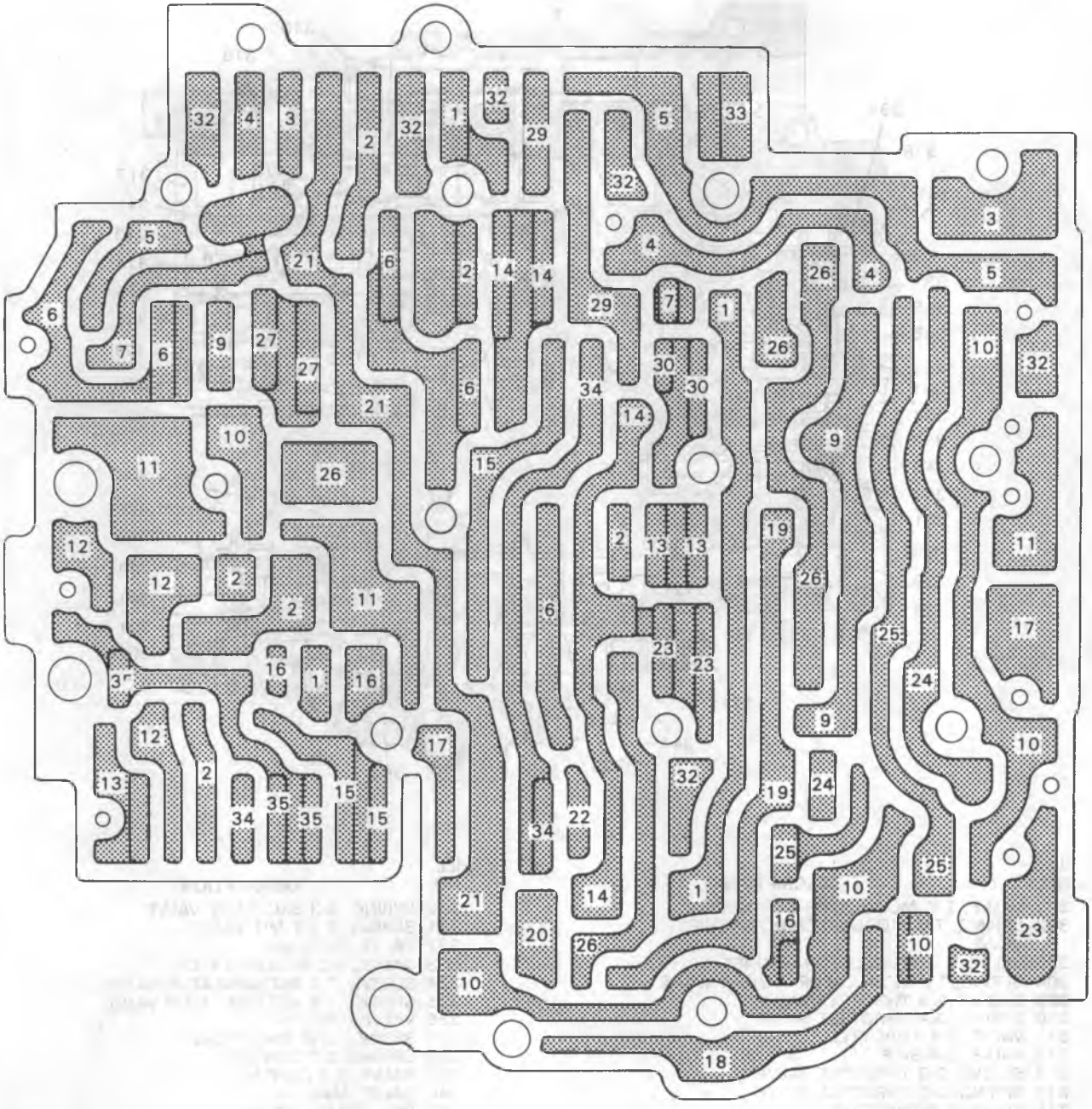

ILL. NO.	DESCRIPTION
1	LINE
2	D4
3	D2
4	LO
5	REVERSE
6	GOVERNOR
7	LO - 1ST FEED
9	3RD ACCUMULATOR
10	T.V.
11	M.T.V.
12	ACCUMULATOR
13	4TH SIGNAL
14	2ND CLUTCH
15	3-4 ACCUMULATOR
16	T.V.F.
17	OVERRUN CLUTCH
18	T.V. EX.
19	D3/PART THROTTLE
20	PART THROTTLE
21	D3
22	4TH CLUTCH
23	C.C. SIG.
24	MOD. UP
25	MOD. DOWN
26	DETENT
27	3-4 CLUTCH
29	RND4-3
30	3RD CLUTCH
31	IDENTIFICATION
32	VOID
33	EXHAUST
34	SF
35	4-3
42	D4 ABUSE
43	3RD FEED
44	3-2 HIGH SPEED
45	2ND FEED
46	3RD CL. EXHAUST
47	4TH FEED
48	1-2 ACCUMULATOR

LH0046-4L60

Figure 44 Valve Body Passages

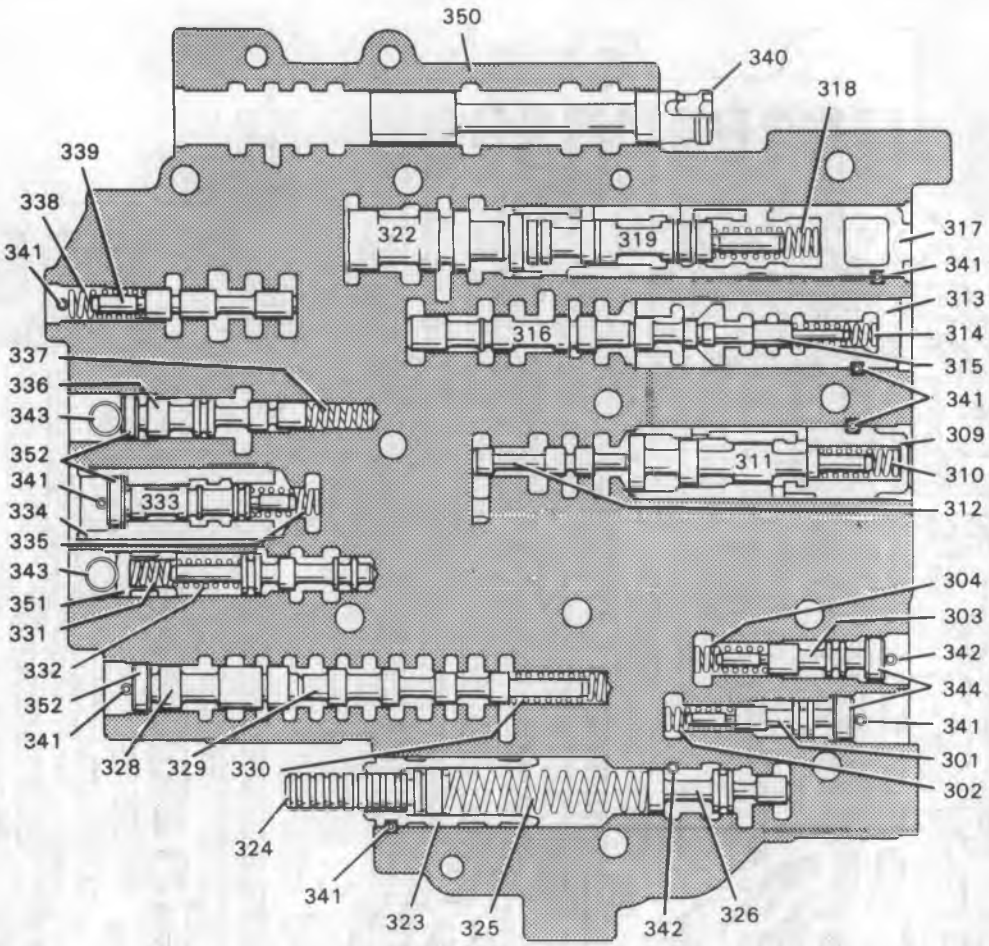

ILL. NO.	DESCRIPTION
301	VALVE, T.V. MODULATOR DOWNSHIFT
302	SPRING, T.V. MODULATOR DOWNSHIFT VALVE
303	VALVE, T.V. MODULATOR UPSHIFT
304	SPRING, T.V. MODULATOR UPSHIFT VALVE
309	SLEEVE, 3-4 THROTTLE VALVE
310	SPRING, 3-4 THROTTLE VALVE
311	VALVE, 3-4 THROTTLE
312	VALVE, 3-4 SHIFT
313	SLEEVE, 2-3 THROTTLE VALVE
314	SPRING, 2-3 THROTTLE VALVE
315	VALVE, 2-3 THROTTLE
316	VALVE, 2-3 SHIFT
317	SLEEVE, 1-2 THROTTLE VALVE
318	SPRING, 1-2 THROTTLE VALVE
319	VALVE, 1-2 THROTTLE
322	VALVE, 1-2 SHIFT
323	SLEEVE, THROTTLE VALVE PLUNGER
324	PLUNGER, THROTTLE VALVE
325	SPRING, THROTTLE VALVE
326	VALVE, THROTTLE
328	VALVE, 3-4 RELAY
329	VALVE, 4-3 SEQUENCE

ILL. NO.	DESCRIPTION
330	SPRING, 4-3 SEQUENCE VALVE
331	SPRING, T.V. LIMIT VALVE
332	VALVE, T.V. LIMIT
333	VALVE, 1-2 ACCUMULATOR
334	SLEEVE, 1-2 ACCUMULATOR VALVE
335	SPRING, 1-2 ACCUMULATOR VALVE
336	VALVE, LINE BIAS
337	SPRING, LINE BIAS VALVE
338	SPRING, 3-2 CONTROL
339	VALVE, 3-2 CONTROL
340	VALVE, MANUAL
341	PIN, COILED SPRING
342	PIN, COILED SPRING
343	RETAINER, SPRING (SLEEVE)
344	PLUG, VALVE BORE
350	BODY, CONTROL VALVE
351	PLUG, T.V. LIMIT
352	PLUG, VALVE BORE (12.5 - O.D.)

LH0047-4L60

Figure 45 Valve Trains

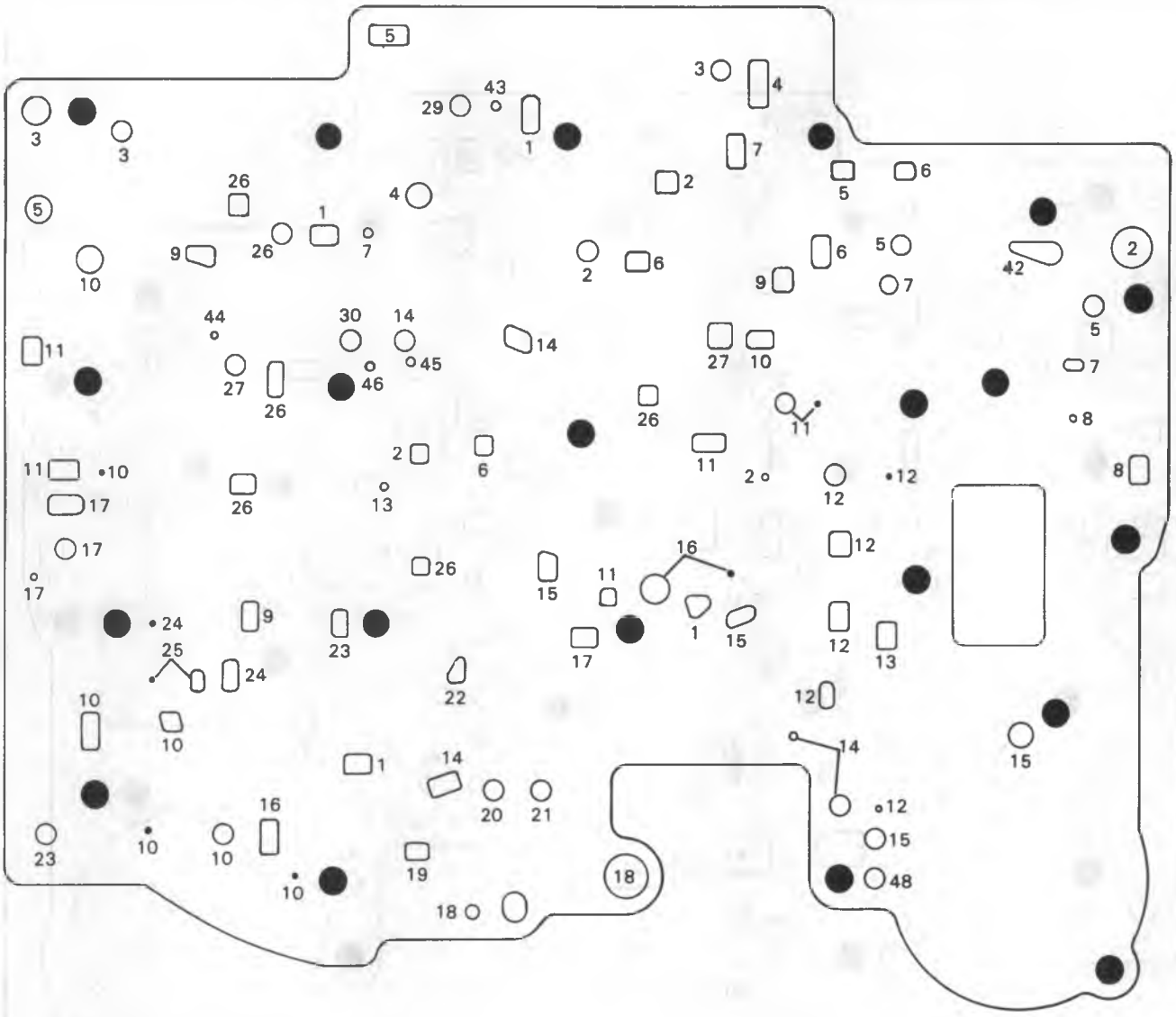

ILL. NO.	DESCRIPTION	ILL. NO.	DESCRIPTION	ILL. NO.	DESCRIPTION
1	LINE	14	2ND CLUTCH	27	3-4 CLUTCH
2	D4	15	3-4 ACCUMULATOR	29	RND4-3
3	D2	16	T.V.F.	30	3RD CLUTCH
4	LO	17	OVERRUN CLUTCH	31	IDENTIFICATION
5	REVERSE	18	T.V. EX.	42	D4 ABUSE
6	GOVERNOR	19	D3/PART THROTTLE	43	3RD FEED
7	LO - 1ST FEED	20	PART THROTTLE	44	3-2 HIGH SPEED
8	LO/REVERSE	21	D3	45	2ND FEED
9	3RD ACCUMULATOR	22	4TH CLUTCH	46	3RD CL. EXHAUST
10	T.V.	23	C.C. SIG.	47	4TH FEED
11	M.T.V.	24	MOD. UP	48	1-2 ACCUMULATOR
12	ACCUMULATOR	25	MOD. DOWN		
13	4TH SIGNAL	26	DETENT		

LH0048-4L60

Figure 46 Typical Spacer Plate

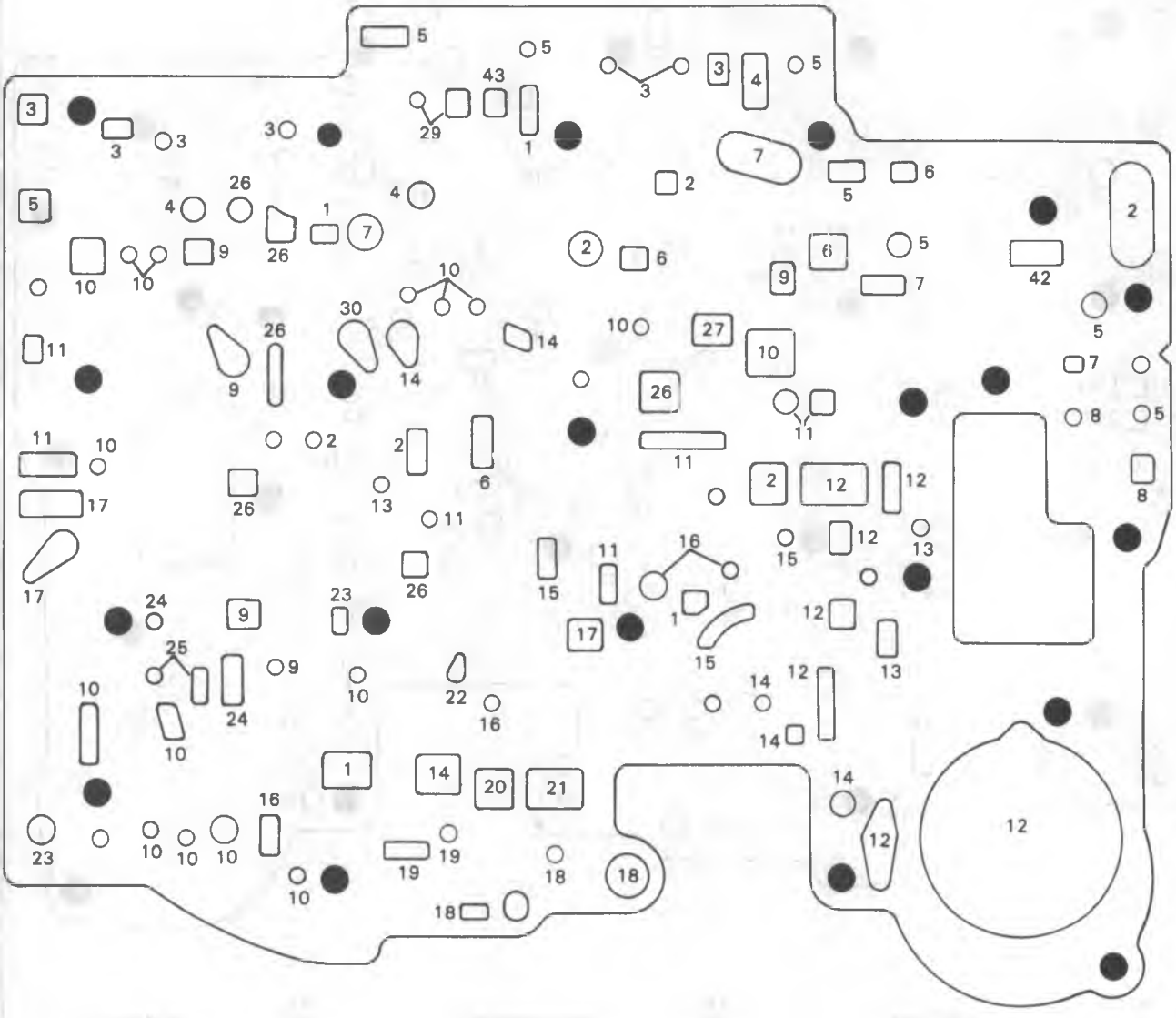

ILL. NO.	DESCRIPTION
1	LINE
2	D4
3	D2
4	LO
5	REVERSE
6	GOVERNOR
7	LO - 1ST FEED
8	LO/REVERSE
9	3RD ACCUMULATOR
10	T.V.
11	M.T.V.
12	ACCUMULATOR
13	4TH SIGNAL
14	2ND CLUTCH
15	3-4 ACCUMULATOR
16	T.V.F.
17	OVERRUN CLUTCH
18	T.V. EX.
19	D3/PART THROTTLE
20	PART THROTTLE
21	D3
22	4TH CLUTCH
23	C.C. SIG.
24	MOD. UP
25	MOD. DOWN
26	DETENT
27	3-4 CLUTCH
29	RND4-3
30	3RD CLUTCH
31	IDENTIFICATION
42	D4 ABUSE
43	3RD FEED
44	3-2 HIGH SPEED
45	2ND FEED
46	3RD CL. EXHAUST
47	4TH FEED
48	1-2 ACCUMULATOR

LH0049-4L60

Figure 47 Spacer Plate to Valve Body Gasket

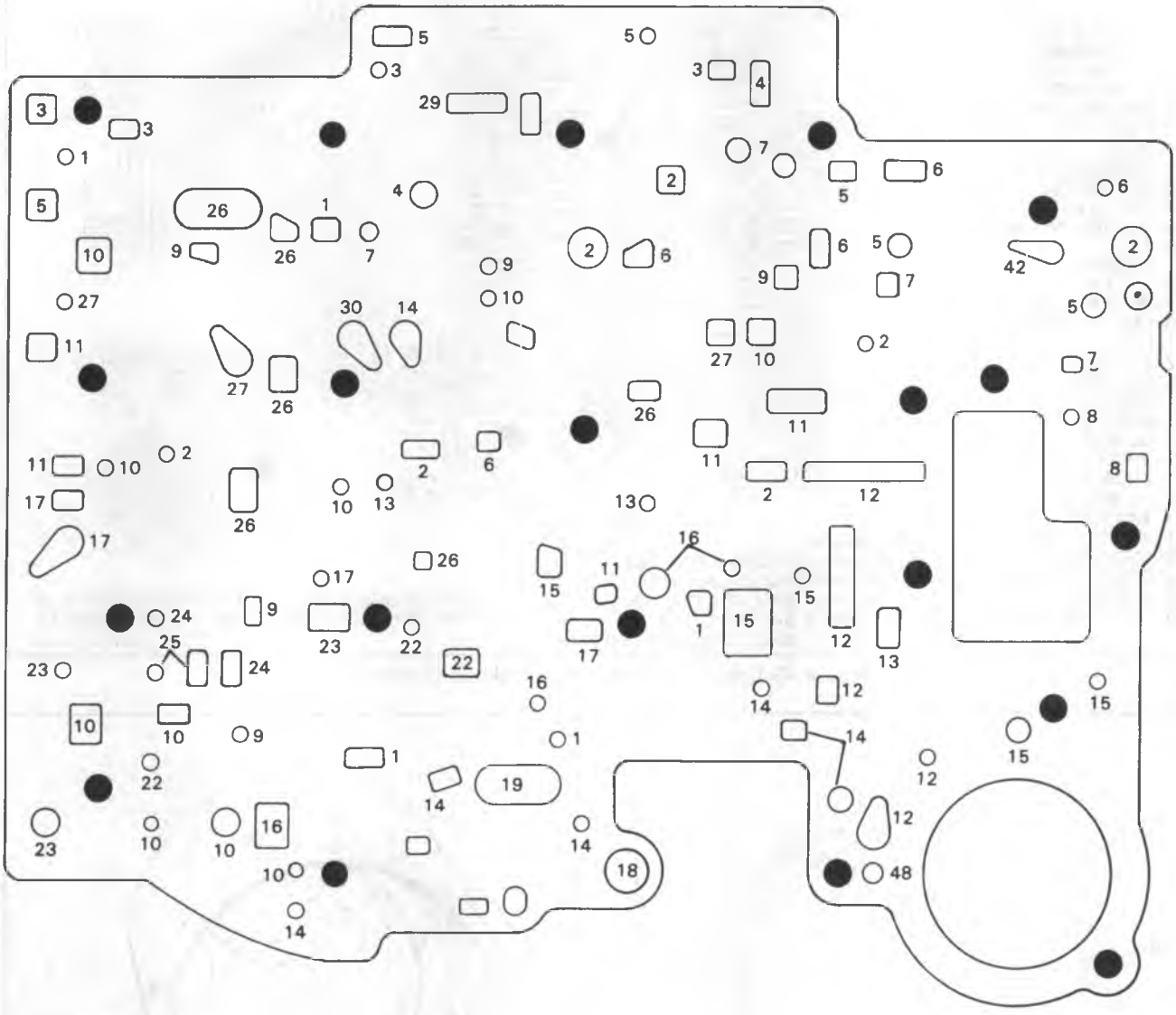

ILL. NO.	DESCRIPTION	ILL. NO.	DESCRIPTION	ILL. NO.	DESCRIPTION
1	LINE	14	2ND CLUTCH	27	3-4 CLUTCH
2	D4	15	3-4 ACCUMULATOR	29	RND4-3
3	D2	16	T.V.F.	30	3RD CLUTCH
4	LO	17	OVERRUN CLUTCH	31	IDENTIFICATION
5	REVERSE	18	T.V. EX.	42	D4 ABUSE
6	GOVERNOR	19	D3/PART THROTTLE	43	3RD FEED
7	LO - 1ST FEED	20	PART THROTTLE	44	3-2 HIGH SPEED
8	LO/REVERSE	21	D3	45	2ND FEED
9	3RD ACCUMULATOR	22	4TH CLUTCH	46	3RD CL. EXHAUST
10	T.V.	23	C.C. SIG.	47	4TH FEED
11	M.T.V.	24	MOD. UP	48	1-2 ACCUMULATOR
12	ACCUMULATOR	25	MOD. DOWN		
13	4TH SIGNAL	26	DETENT		

LH0050-4L60

Figure 48 Spacer Plate to Case Gasket

PASSAGES

1 LINE
2 D4
3 D2
4 LO
5 REVERSE
6 GOVERNOR
7 LO - 1ST FEED
8 LO/REVERSE
9 3RD ACCUMULATOR
10 T.V.
11 M.T.V.
12 ACCUMULATOR (4TH)
13 4TH SIGNAL
14 2ND CLUTCH
15 3-4 ACCUMULATOR
16 T.V.F.
17 OVERRUN CLUTCH
18 T.V. EX.
19 D3/PART THROTTLE
20 PART THROTTLE
21 D3
22 4TH CLUTCH
23 C.C. SIG.
24 MOD. UP
25 MOD. DOWN
26 DETENT
27 3-4 CLUTCH (3-2 EX)
29 RND4-3
42 D4 ABUSE
43 3RD FEED
44 3-2 HIGH SPEED
45 2ND FEED
46 3RD CL. EXHAUST
47 4TH FEED
48 1-2 ACCUMULATOR

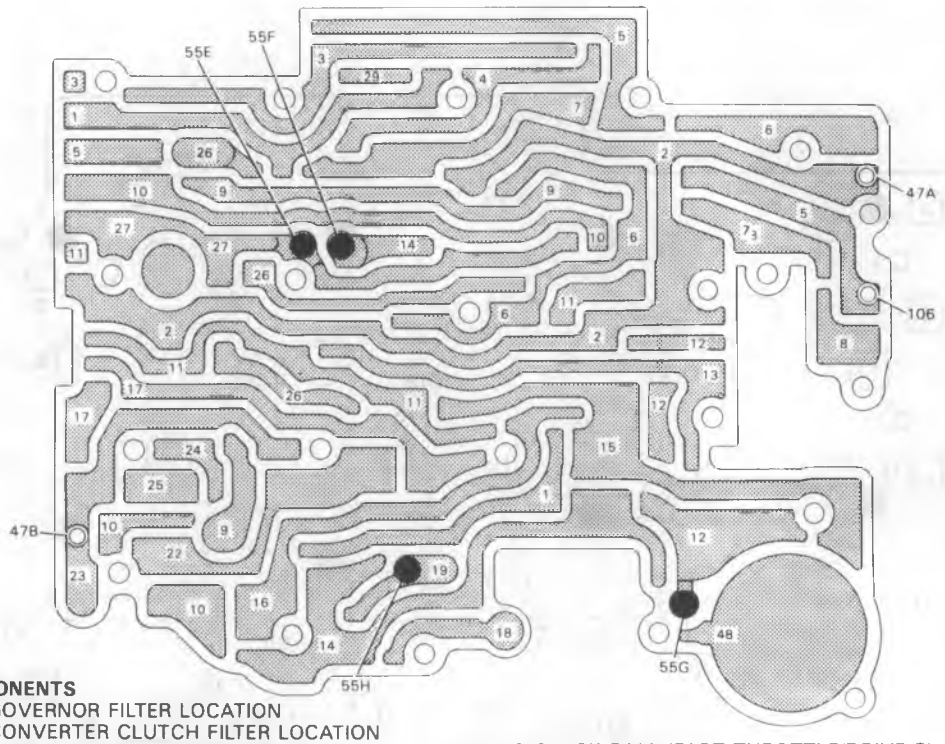

COMPONENTS

47A GOVERNOR FILTER LOCATION
47B CONVERTER CLUTCH FILTER LOCATION
55E #4 CHECK BALL (3-4 CLUTCH/3-2 EX.)
55F #8 CHECK BALL (2ND/1-2)
55G #1 CHECK BALL (4TH ACCUMULATOR)
55H #3 CHECK BALL (PART THROTTLE/DRIVE 3)
106 RETAINER & BALL ASM. (DOUBLE-ORIFICE)

LH0051-4L60

Figure 49 Case Passages and Checkball Locations

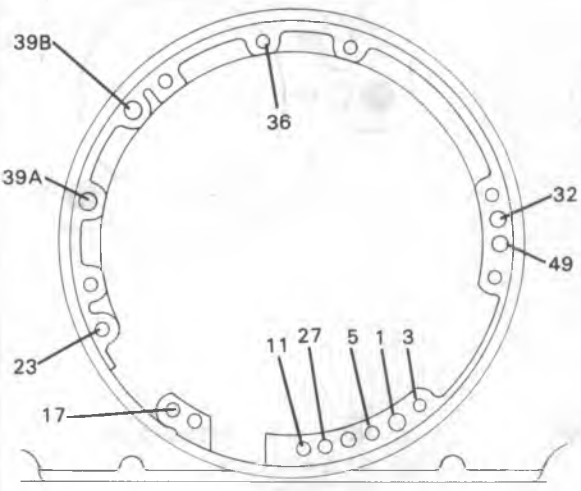

CASE OIL PASSAGES

1 LINE
3 DR-2
5 REVERSE
11 M.T.V.
17 O.R. CLUTCH
23 CONV. CL. SIG.
27 3-4 CLUTCH
32 VOID
36 VENT
39(a) LUBE TO COOLER
39(b) LUBE FROM COOLER
49 PRESSURE TAP

LH0052-4L60

Figure 50 Pump to Case Passages

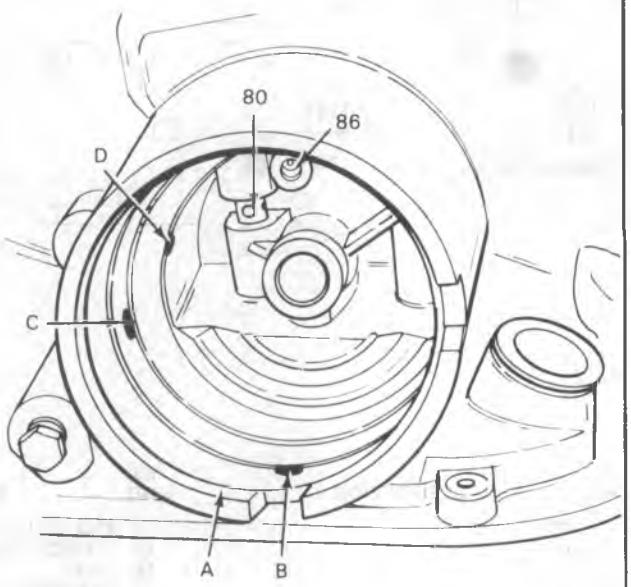

A 2-4 SERVO BORE
B SERVO EXHAUST HOLE
C 2ND & 4TH BAND APPLY PASSAGE
D 3RD ACCUM. PRESSURE TAP PASSAGE
80 RETAINER & BALL ASSEMBLY, 3RD ACCUM.
86 PLUG, CASE SERVO

LH0053-4L60

Figure 51 Servo Passages

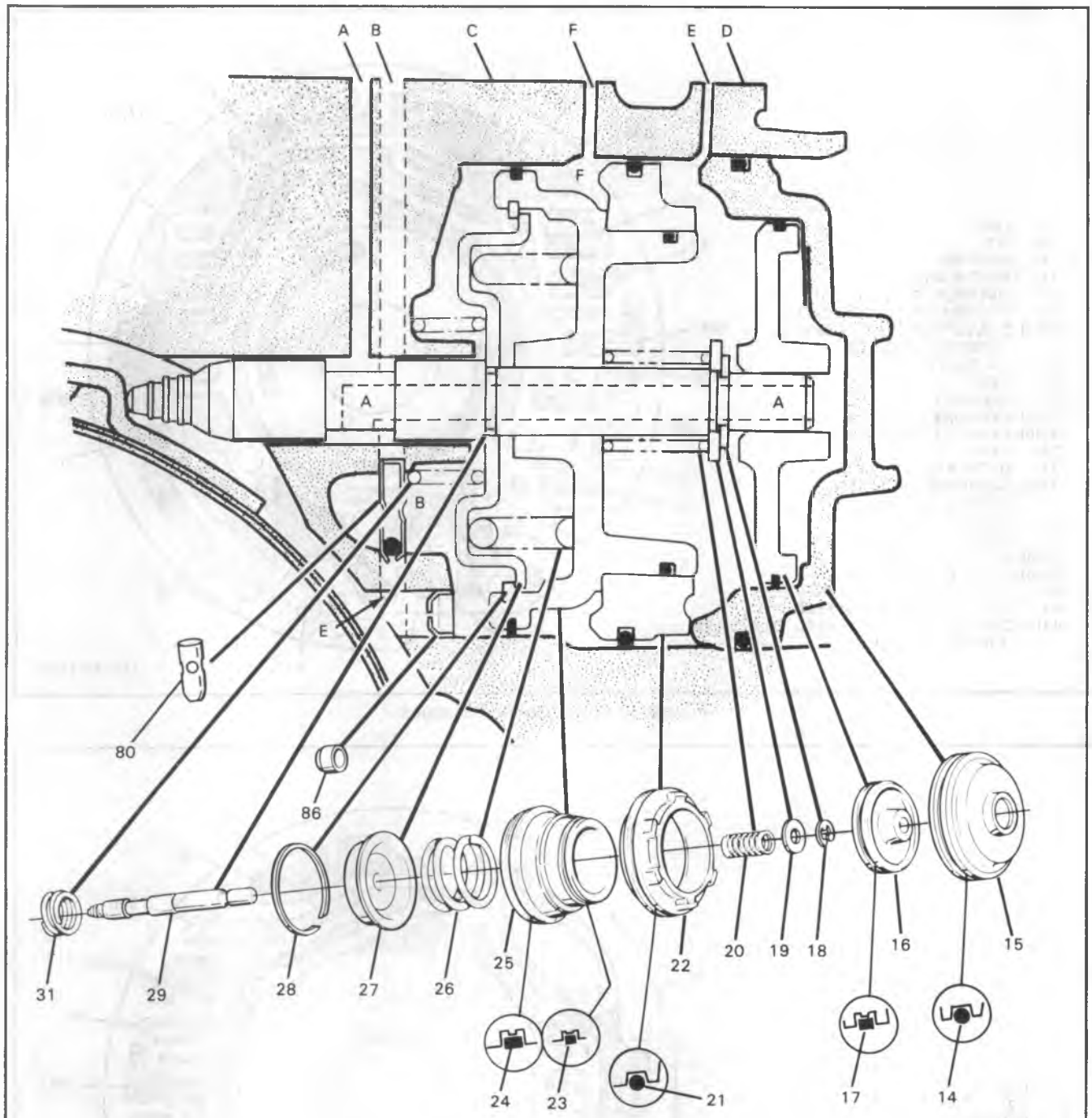

A 4TH OIL
B 3RD ACCUMULATOR OIL
C VALVE BODY FACE
D OIL PAN FLANGE
E EXHAUST
F 2ND OIL
14 SEAL, "O" RING (2-4 SERVO COVER)
15 COVER, 2-4 SERVO
16 PISTON, 4TH APPLY
17 RING, OIL SEAL (4TH APPLY PISTON) (OUTER)
18 RING, RETAINER (APPLY PIN)
19 WASHER, SERVO APPLY PIN
20 SPRING, SERVO APPLY PIN
21 SEAL, "O" RING
22 HOUSING, SERVO PISTON (INNER)
23 RING, OIL SEAL (2ND APPLY PISTON) (INNER)
24 RING, OIL SEAL (2ND APPLY PISTON) (OUTER)
25 PISTON, 2ND APPLY
26 SPRING, SERVO CUSHION
27 RETAINER, SERVO CUSHION SPRING
28 RING, RETAINER (2ND APPLY PISTON)
29 PIN, 2ND APPLY PISTON
31 SPRING, SERVO RETURN
80 RETAINER & BALL ASSEMBLY, 3RD ACCUM.
86 PLUG, CASE SERVO

LH0054-4L60

Figure 52 Servo Assembly

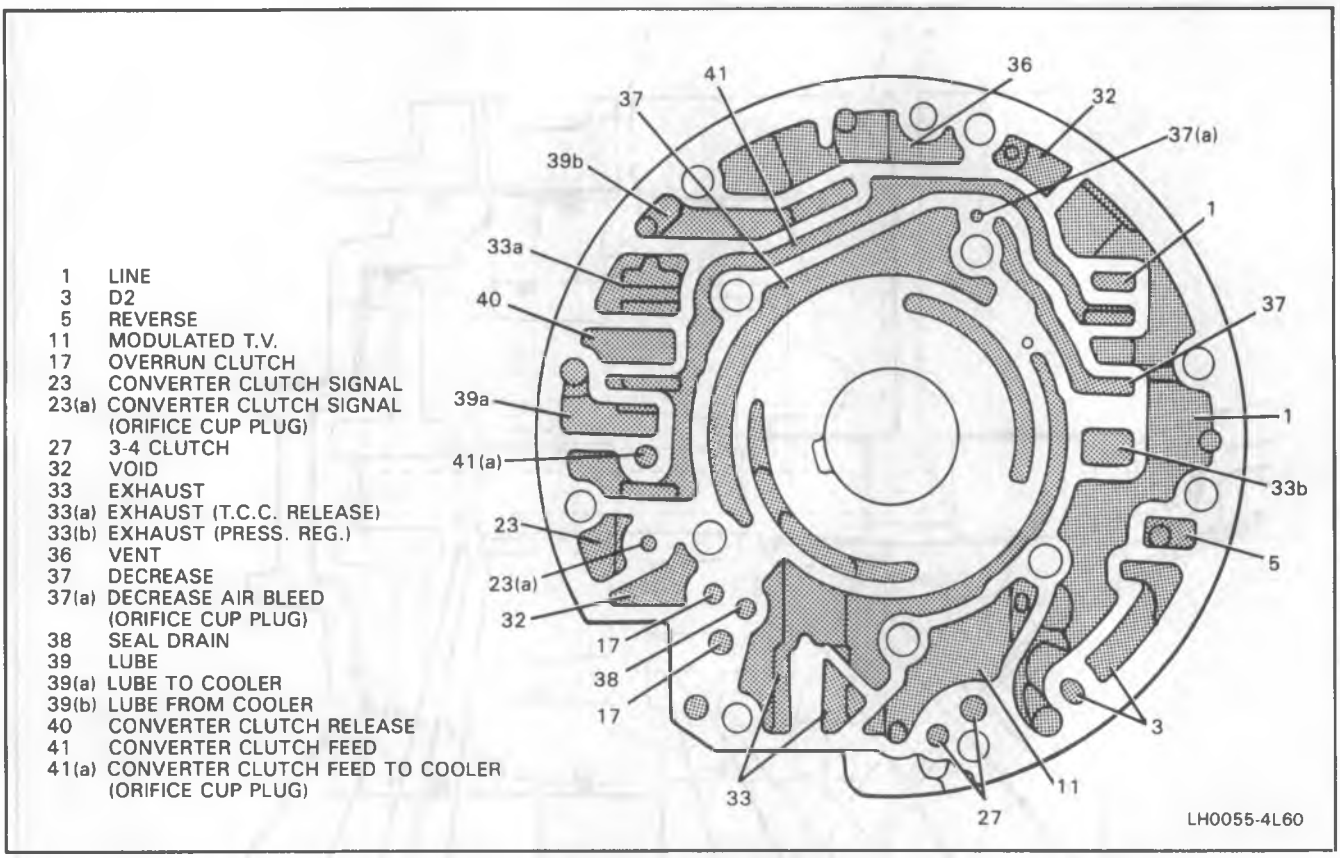

Figure 53 Pump Cover Passages

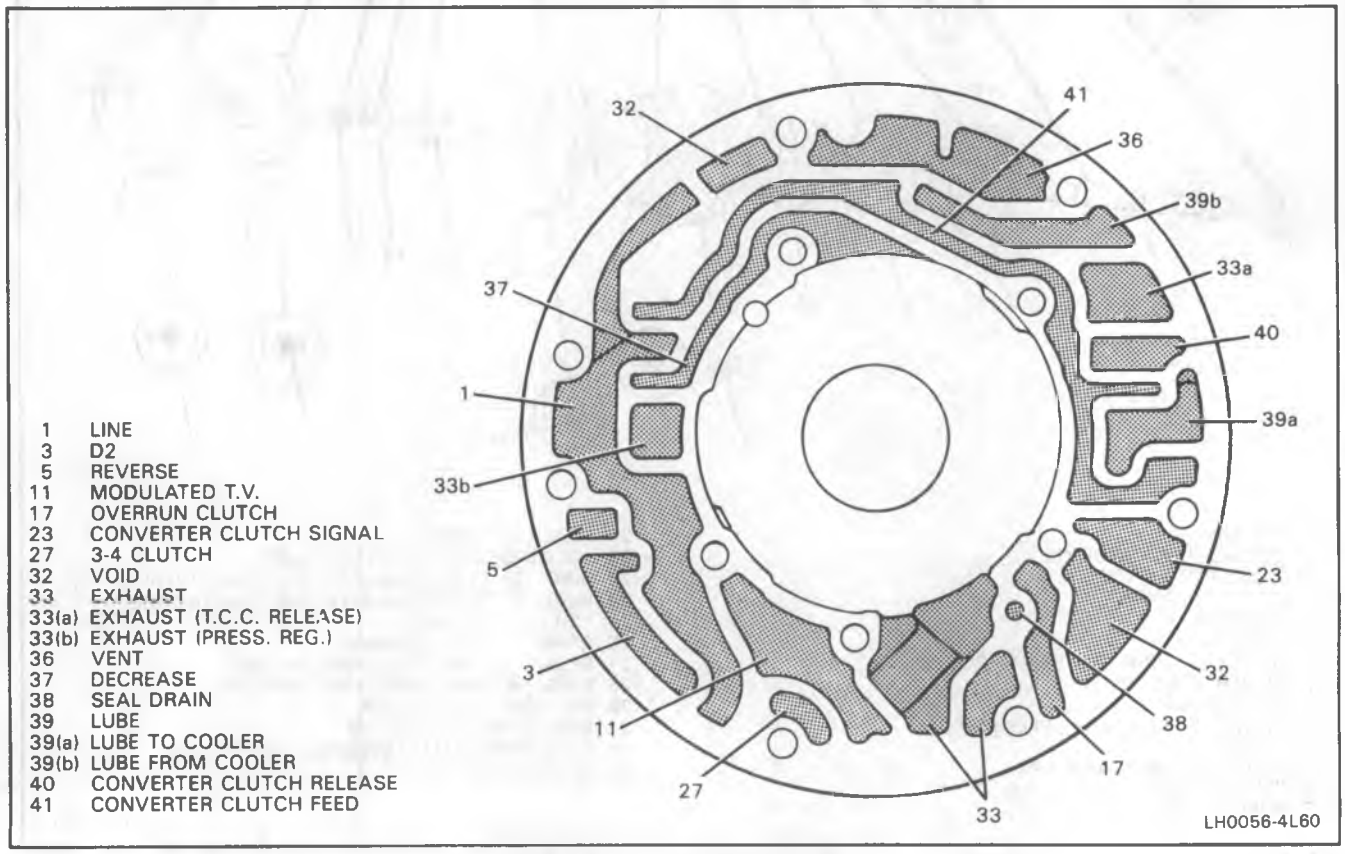

Figure 54 Pump Body Passages

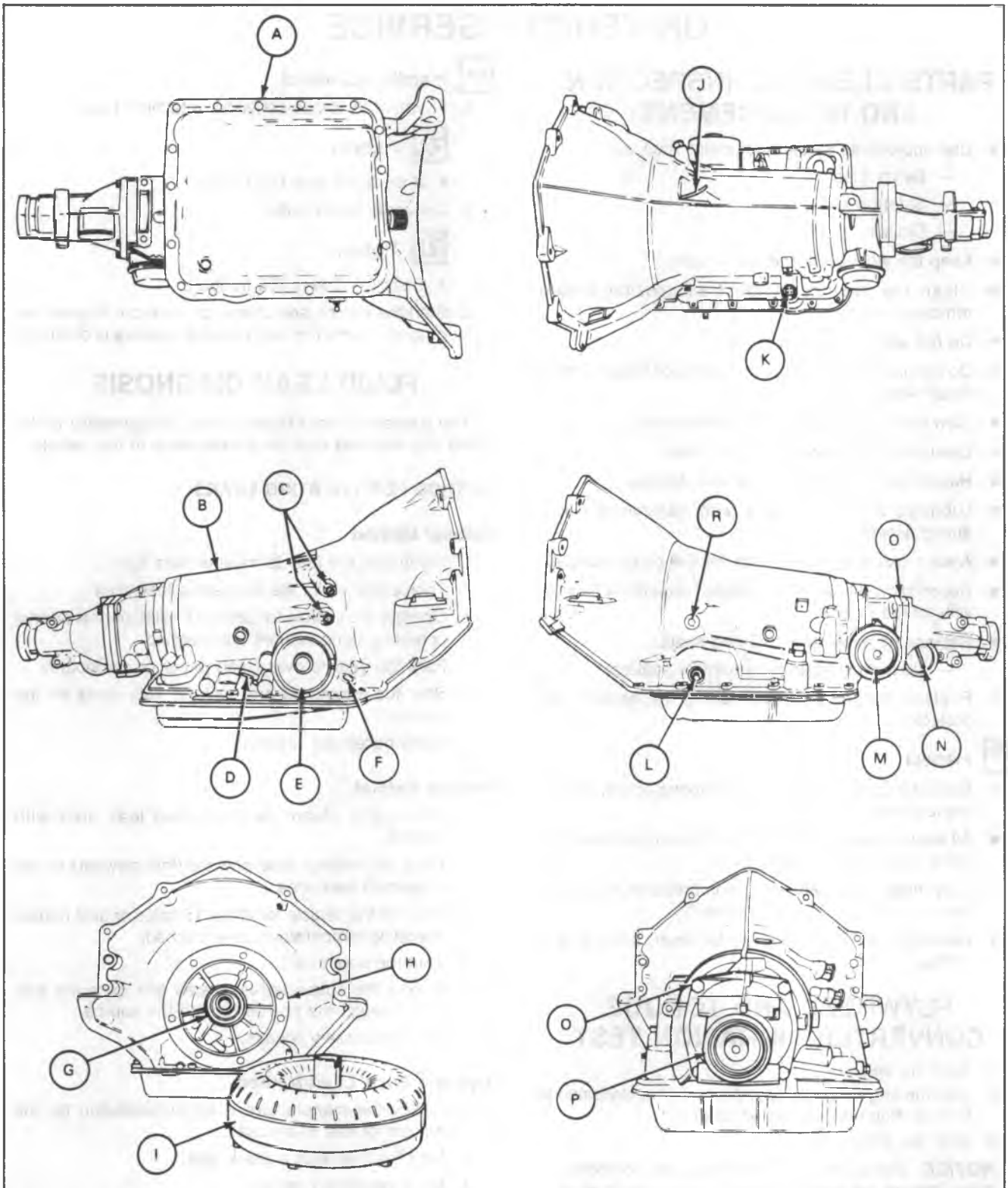

A BOTTOM PAN GASKET
B CASE
C COOLER CONNECTORS & PIPE PLUGS
D T.V. CABLE SEAL
E SERVO COVER SEAL
F OIL FILL TUBE SEAL
G OIL PUMP SEAL ASSEMBLY
H OIL PUMP TO CASE SEAL
I CONVERTER
J VENT
K ELECTRICAL CONNECTOR SEAL
L MANUAL SHAFT SEAL
M GOVERNOR COVER SEAL
N SPEEDO SEAL
O EXTENSION TO CASE SEAL
P EXTENSION OIL SEAL ASSEMBLY

LH0215-4L60

Figure 55—Possible Transmission Fluid Leak Locations

ON-VEHICLE SERVICE

PARTS CLEANING, INSPECTION AND REPLACEMENT

- Use appropriate safety equipment such as:
  - — Safety glasses.
  - — Safety shoes.
  - — Gloves.
- Keep the work area and tools clean.
- Clean the exterior of the transmission before removing any parts
- Do not use wipe cloths or rags.
- Do not use solvents on rubber seals or Plastic/Teflon thrust washers.
- Blow out all passages with compressed air.
- Clean small passages with fine wire.
- Handle parts carefully to prevent damage.
- Lubricate all internal parts with transmission fluid during assembly.
- Always use a torque wrench for the proper torque.
- Recondition damaged or stripped aluminum threads with thread inserts.
- Replace all gaskets and O-ring seals.
  - — Do not use gasket cement or sealers.
- Replace Teflon and install using the proper seal protector.

Inspect

- Manual linkage for wear at the pivoting points, bent or broken links and rods.
- All seals, gaskets, O-rings, and mating surfaces for nicks, cuts, or other damage.
- Snap rings for expansion or compression, distortion, nicks, and proper ring to groove fit.
- Bearings and thrust surfaces for wear, scoring, and pitting.

FLYWHEEL AND TORQUE CONVERTER VIBRATION TEST

1. Start the engine.
2. With the engine at idle speed and the transmission in Park or Neutral, observe vibration.
3. Shut the engine off.

NOTICE: Some engine/transmission combinations cannot be balanced in this manner due to limited clearances between the torque converter bolts and engine. Be sure bolts do not bottom out in lug nuts or the torque converter cover could be dented and cause internal damage.

Remove or Disconnect

1. Converter cover attaching bolts.
2. Flywheel to torque converter attaching bolts.

- Rotate the torque converter 1/3 turn.

Install or Connect

1. Flywheel to torque converter attaching bolts.

   Tighten

   - Bolts to 62 N•m (45 ft. lbs.).
2. Converter cover bolts.

   Tighten

   - Bolts to 10 N•m (89 in. lbs.).
3. Start the engine and check for vibration. Repeat this procedure until the best possible balance is obtained.

FLUID LEAK DIAGNOSIS

The cause of most external leaks can generally be located and repaired with the transmission in the vehicle.

METHOD FOR LOCATING LEAKS

General Method

1. Verify that the leak is transmission fluid.
2. Thoroughly clean the suspected leak area.
3. Operate the vehicle for about 15 miles or until normal operating temperatures are reached.
4. Park the vehicle over clean paper or cardboard.
5. Shut the engine off and look for fluid spots on the paper.
6. Make necessary repairs.

Powder Method

1. Thoroughly clean the suspected leak area with solvent.
2. Apply an aerosol type powder (foot powder) to the suspected leak area.
3. Operate the vehicle for about 15 miles or until normal operating temperatures are reached.
4. Shut the engine off.
5. Inspect the suspected leak area and trace the leak path through the powder to find the source.
6. Make necessary repairs.

Dye and Black Light Method

1. Follow the manufacturer's recommendation for the amount of dye to be used.
2. Find the leak with a black light.
3. Make necessary repairs.

REPAIRING THE LEAK

Once the leak has been pinpointed and traced back to its source, the cause of the leak must be determined in order for it to be repaired properly. If a gasket is replaced, but the sealing flange is bent, the new gasket will not repair the leak. The bent flange must be repaired also. Before attempting to repair a leak, check to be sure that the following conditions are correct as they may cause a leak.

Gaskets

- Fluid level/pressure is too high.
- Plugged vent or drain-back holes.
- Improperly torqued fasteners or dirty/damaged threads.
- Warped flanges or sealing surface.
- Scratches, burrs, or other damage to the sealing surface.
- Damaged or worn gasket.
- Cracking or porosity of the component.
- Improper sealant used (where applicable).

Seals

- Fluid level/pressure is too high.
- Plugged vent or drain-back holes.
- Damaged seal bore (scratched, burred, or nicked).
- Damaged or worn seal.
- Improper installation.
- Cracks in component.
- Manual or output shaft surface scratched, nicked, or missing.
- Loose or worn bearing causing excess seal wear.

POSSIBLE POINTS OF OIL LEAKS

1. Transmission/Transmission Oil Pan:
   - Attaching bolts not torqued correctly.
   - Improperly installed or damaged gasket.
   - Oil pan or mounting face not flat.
2. Case leak:
   - Filler tube multi-lip seal damaged or missing.
   - Filler tube bracket mislocated.
   - T.V. cable multi-lip seal missing, damaged or improperly installed.
   - Governor cover or O-ring damaged or missing.
   - Speed sensor seal damaged.
   - Manual shaft seal damaged.
   - Oil cooler connector fittings loose or damaged.
   - Propeller shaft oil seal worn or damaged.
   - Governor cover.
   - Line pressure pipe plug loose.
   - Porous casting.
3. Leak at Converter End:
   - Converter seal damaged.
     - — Seal lip cut (check converter hub for damage).
     - — Bushing moved forward and damaged.
     - — Garter spring missing from seal.
   - Converter leak in weld area.
   - Porous casting (case or pump).
4. Fluid Comes Out Vent Pipe or Fill Tube:
   - Overfilled.
   - Water or coolant in fluid (fluid will appear milky).
   - Case porous.
   - Incorrect fluid level indicator.
   - Plugged vent.
   - Drain back holes plugged.
   - Mispositioned oil pump to case gasket (if equipped).

CASE POROSITY REPAIR

1. Clean the leak area with solvent and air dry.

   CAUTION: Epoxy adhesive may cause skin irritations and eye damage. Read and follow all information on the container label as provided by the manufacturer.
2. Mix a sufficient amount of epoxy adhesive (GM Part No. 1052533 or equivalent) following the manufacturer's recommendations.
3. While the transmission case is hot, apply epoxy adhesive with a clean, dry soldering acid brush.
4. Allow the epoxy adhesive to cure for three hours before starting the engine.
5. Repeat fluid leak diagnosis procedures.

TORQUE CONVERTER CLUTCH ELECTRICAL CONTROLS

The Torque Converter Clutch (TCC) system uses controls that are internal as well as external to the transmission. For internal control components of the TCC system, refer to the Hydraulic Diagnosis Section for wiring diagrams and switch locations.

The external control components of the TCC system include:

- Brake Release Switch — To avoid stalling the engine when braking, the converter clutch is released any time the brakes are applied.
- Electronic Control Module — Receives input signals and grounds TCC solenoid to apply clutch when the proper operating conditions are met.
- Throttle Position Sensor — Sends throttle position information to the Electronic Control Module.
- Vacuum Sensor — Sends engine vacuum (load) information to the Electronic Control Module.
- Vehicle Speed Sensor — Sends vehicle speed information to the Electronic Control Module.
- Coolant Temperature Sensor — Sends engine coolant temperature information to the Electronic Control Module.

TORQUE CONVERTER CLUTCH DIAGNOSIS

To properly diagnose the Torque Converter Clutch system, perform all electrical testing before the hydraulic testing. Refer to the Fuel and Emissions Manual X-9136, if using X-9157, and to the rear of this manual if using ST331-91, for additional testing of the Torque Converter Clutch system.

SHIFT LINKAGE

R/V MODELS

Remove or Disconnect (Figure 56)

- Apply the parking brake.

1. Retaining pin (326).
2. Rod (340) from the column lever.
   - Note the position of any washers, spacers and insulators removed.
3. Rod (340) from the equalizer lever (338).
   - Screw (342) and the washer (341).
   - Swivel (332).
4. Retaining pin (327) and the equalizer lever (338).
   - Insulator, washer and the spring.

Clean

- Metal parts using solvent. Wipe dry using a clean, dry rag.
- Rubber or nylon parts using soapy water. Wipe dry using a clean, dry rag.

Install or Connect (Figure 56)

1. Equalizer lever (338) and a new retaining pin (326).
   - Spring, washer and the insulator.
2. Rod (340) to the equalizer lever (338).
   - Swivel (332).
   - Washer (341) and the screw (342).
3. Rod (340) to the column lever.
   - Insulators, spacers and washers in the positions from which they were removed.
4. New retaining pin (326).

Adjust

- Apply the parking brake.

1. Loosen the screw (342).
2. Put the column selector lever in the "N" (Neutral) position.
   - Put the lever into the neutral gate, do not use the indicator to find the neutral position.
3. Put the transmission in neutral.
   - Move the shift lever (A) to the forward position, then back to the second detent.

NOTICE: See "Notice" on page 7A1-1 of this section.

4. Hold the rod (340) tightly in the swivel (332).

Tighten

- Screw (342) to 23 N•m (17 ft. lb.).

5. Put the column selector lever in the "P" (Park) position.
6. Check the adjustment.
   - The column selector lever must go into all positions.
   - The engine must start in the "P" (Park) or "N" (Neutral) positions only. Adjust if needed, refer to "Neutral Start Switch" in this section.

CAUTION: With the selector lever in the "Park" position, the parking pawl should freely engage within the rear (reaction) internal gear lugs or output ring gear lugs and prevent the vehicle from rolling, which could cause personal injury.

- Align the indicator, if needed.
- Release the parking brake.

P-MOTORHOME MODELS

Remove or Disconnect (Figure 57)

- Apply the parking brake.

1. Retaining pin from column lever.
2. Cable retaining bolts.
3. Cable from transmission bracket (346).
4. Pin (336).
5. Clevis pin (339).
6. Cable.

Clean

- Metal parts using solvent. Wipe dry using a clean, dry rag.
- Rubber or nylon parts using sopay water. Wiper dry using clean, dry rag.

Install or Connect (Figure 57)

1. Cable.
2. Clevis pin (339).
3. Pin (336).
4. Cable to transmission bracket (346).
5. Cable retaining bolts.
6. New retaining pin onto column lever.

Adjust

- Apply the parking brake.

1. Remove clevis pin (339).
2. Put the column selector lever in the "N" (Neutral) position.
   - Put the lever into the neutral gate, do not use the indicator to find the neutral position.
3. Put the transmission in neutral.
   - Move the shift lever (A) to the forward position, then back to the second detent.
4. Turn clevis until it can be placed on the transmission stud.
5. Install clevis pin (339).

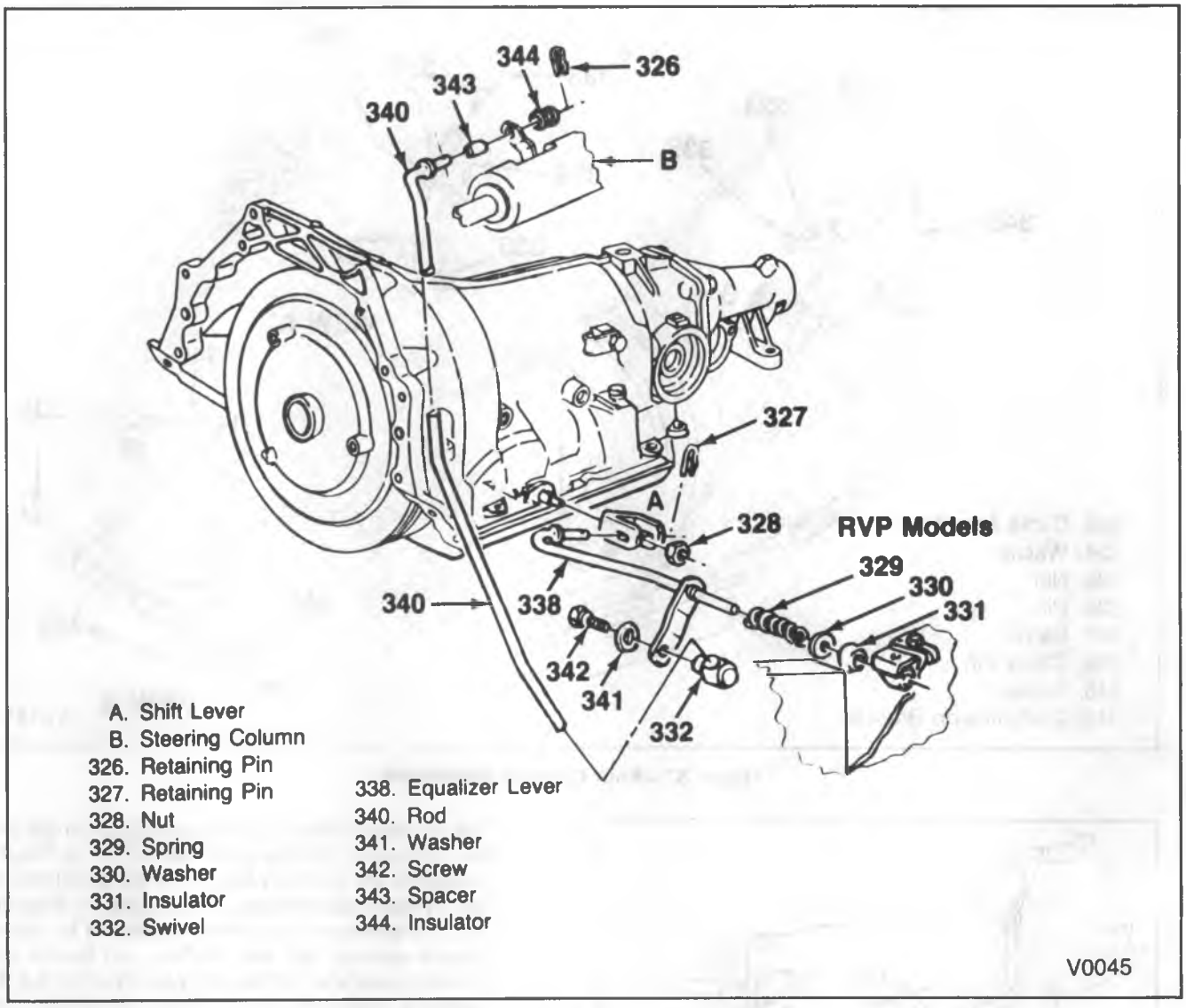

Figure 56—Shift Linkage

6. Check the adjustment.
   - The column selector lever must go into all positions.
   - The engine must start in the "P" (Park) or "N" (Neutral) positions only. Adjust if needed, refer to "Neutral Start Switch" in this section.

CAUTION: With the selector lever in the "Park" position, the parking pawl should freely engage within the rear (reaction) internal gear lugs or output ring gear lugs and prevent the vehicle from rolling, which could cause personal injury.

- Align the indicator, if needed.
- Release the parking brake.

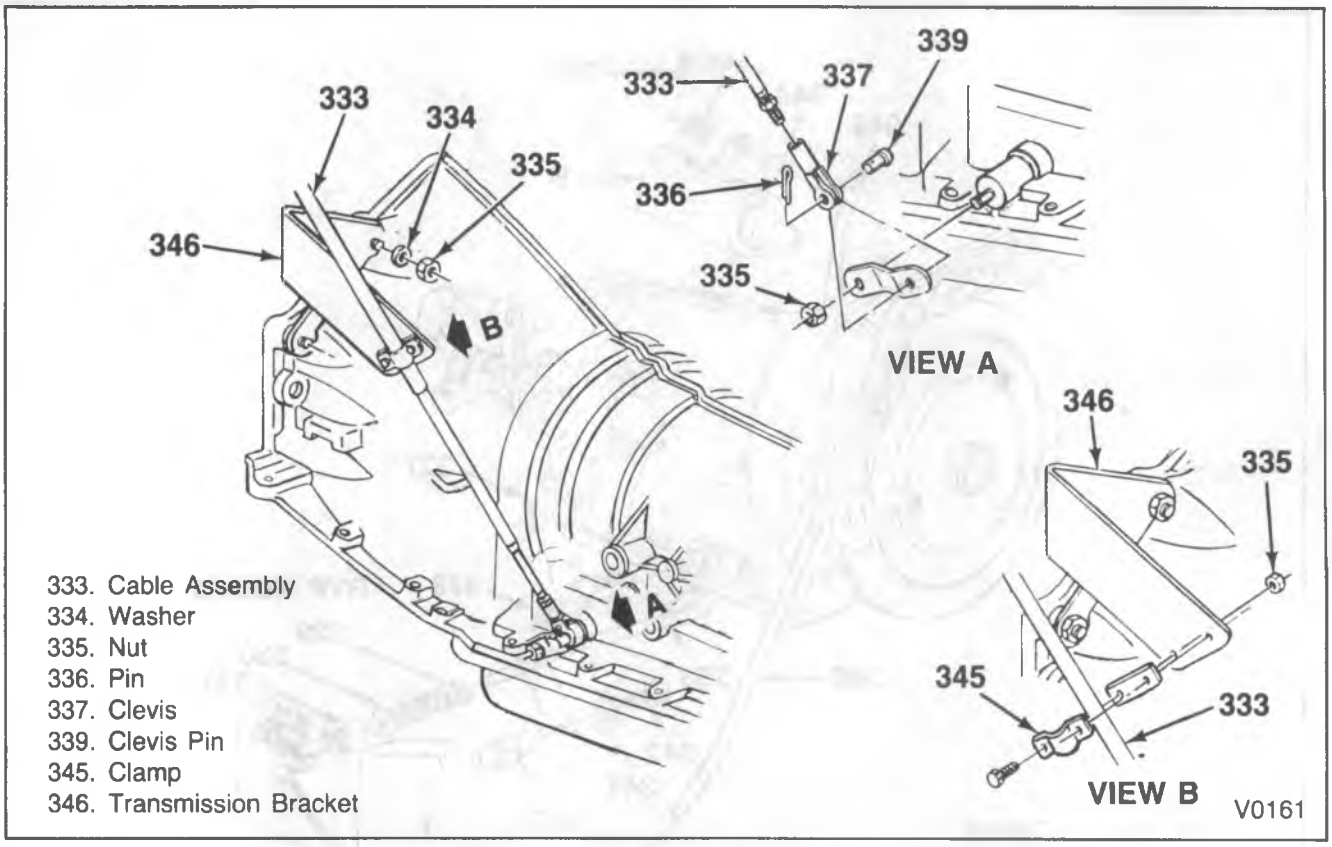

Figure 57—Shift Cable P-Motorhome

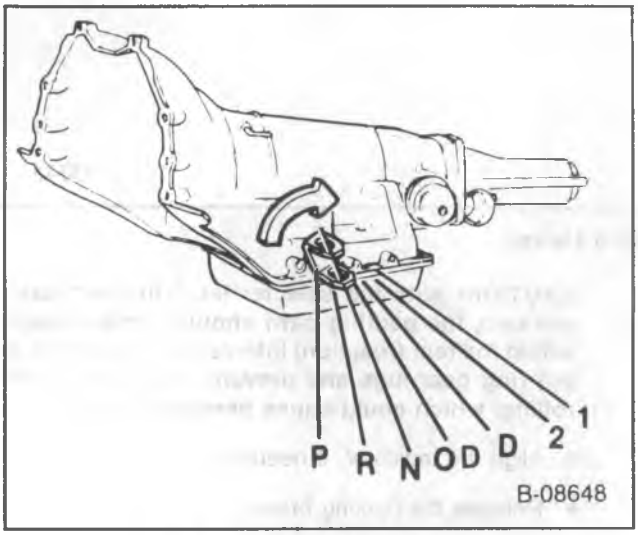

Figure 58—Shift Positions

TV CABLE

The TV Cable used with the 4L60 transmission should not be thought of as an automatic downshift cable. The TV cable used on the 4L60 controls line pressure, shift points, shift feel, part throttle downshifts and detent downshifts. The function of the cable is similar to the combined functions of a vacuum modulator and a detent cable.

The TV cable operates the TV link (144) and bracket in the transmission (figure 58).

The TV bracket assembly serves two (2) base functions:

1. The primary function of this assembly is to transfer the carburetor throttle plate movement to the TV plunger in the control valve assembly as related by the TV cable and linkage. This causes TV pressure and line pressure to increase according to engine throttle opening and also controls part throttle and detent downshifts. The proper adjustment of the TV cable is based on the TV plunger being fully depressed to flush with the TV bushing at engine wide open throttle.
2. The second function of the assembly involves a TV exhaust ball. The function of this system is to prevent the transmission from operating at low (idle position) pressures, if the TV cable should become broken or disconnected. If the cable is not connected or broken, the TV lifter rod will not move from its normal spring loaded up position which holds the TV exhaust check ball off its seat. The TV lifter rod will drop down to allow the TV exhaust ball to seat only if the cable is broken, disconnected or extremely out of adjustment. With the transmission pan removed, it should be possible to pull down on the TV exhaust valve lifter rod and the springs should return the rod to its normal up position. If the throttle lever and bracket assembly or lifter rod binds or sticks so that the TV lifter rod cannot lift the exhaust ball off its seat, high line pressures and delayed shifts will result.

Remove or Disconnect (Figure 59)

1. Air cleaner.
2. Cable terminal (225) from the throttle lever (140).

3. Cable housing (141) from the bracket while compressing locking tangs (B).
4. Routing clips or straps.
5. Screw (252) and the washer.
6. Cable (142) from the transmission link (144).

   - Pull up on cable cover at the transmission until the cable is visible.

   7. Seal (254).

Install or Connect (Figure 59)

1. New seal (254) into the transmission case hole.
2. Cable (142) to the transmission link.

NOTICE: See "Notice" on page 7A1-1 of this section.

3. Screw (252) and the flat washer.

Tighten

- Screw (252) to 10 N•m (89 lb. in.).

4. Cable routing clips or straps.
5. Cable (142) through the engine bracket and engage locking tangs (B) of the cable on the bracket.

Important

- Avoiding damaging or kinking the cable.

6. Cable terminal (255) from the throttle lever (140).
   - Pull on upper end of cable. It should travel a short distance with light resistance caused by the small return spring on the TV lever. When releasing the upper end of the TV cable, it should return to the zero TV position.
7. Adjust the TV cable. Refer to "TV Cable Adjustment" in this section.

TV CABLE ADJUSTMENT

Adjustment of the TV cable must be made by rotating the throttle lever at the carburetor or throttle body. Do not use the accelerator pedal to rotate the throttle lever.

Adjust (Figure 59)

1. Stop the engine.
2. Depress and hold down the metal re-adjust tab (250) at the engine end of the TV cable (142).
3. Move the slider (251) until it stops against the fitting.
4. Release the readjustment tab (250).
5. Rotate the throttle lever (140) to its "full travel position."
6. The slider (251) must move (ratchet) toward the lever when the lever is rotated to its "full travel position."
   - Check that cable moves freely. The cable may appear to function properly with the engine stopped and cold. Recheck after the engine is hot.
7. Road test the vehicle.

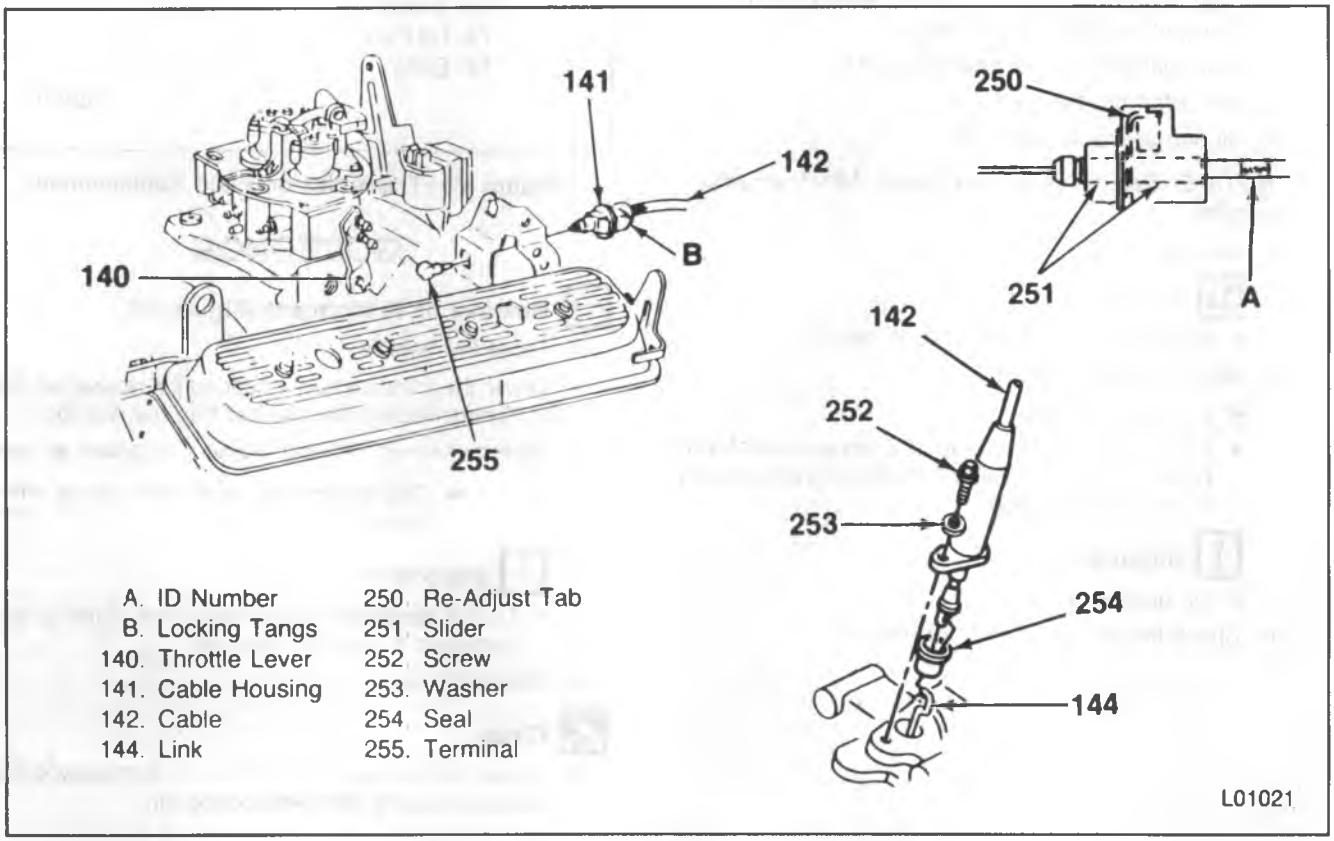

Figure 59—TV Cable Replacement

CHANGING THE FLUID AND FILTER

Remove or Disconnect (Figure 60)

- Raise the vehicle and support it using suitable safety stands.
- Place a drain pan under transmission oil pan.

1. Oil pan screws (74) from the front and sides only.
   - Loosen the rear oil pan screws approximately 4 turns.

NOTICE: Do not damage the transmission case or oil pan sealing surfaces.

2. Lightly tap the oil pan (73) with a rubber mallet or pry down to allow the fluid to drain.
   - Inspect the fluid color, refer to "Transmission Fluid Information" in this section.
3. Remaining oil pan screws (74), oil pan and the gasket (72).
4. Oil filter (71) and the seal (70).
   - The seal may be stuck in the case.

Clean

- Transmission case and oil pan gasket surfaces with solvent and air dry.
  - — All traces of old gasket material must be removed.

Install or Connect (Figure 60)

- Coat a new seal (70) with a small amount of Transjel™ J-36850 or equivalent.

1. New seal (70) onto a new filter (71).
2. New filter into the case.
3. Oil pan and a new gasket.

NOTICE: See "Notice" on page 7A1-1 of this section.

4. Screws.

   Tighten
   - Screws (74) to 20 N•m (15 ft. lbs.).
5. New transmission fluid.
   - Lower the vehicle.
   - Fill the transmission to the proper level with DEXRON® II fluid. Refer to "Checking and Adding Fluid" in this section.

   Important
   - Do not overfill.
6. Check the oil pan gasket for leaks.

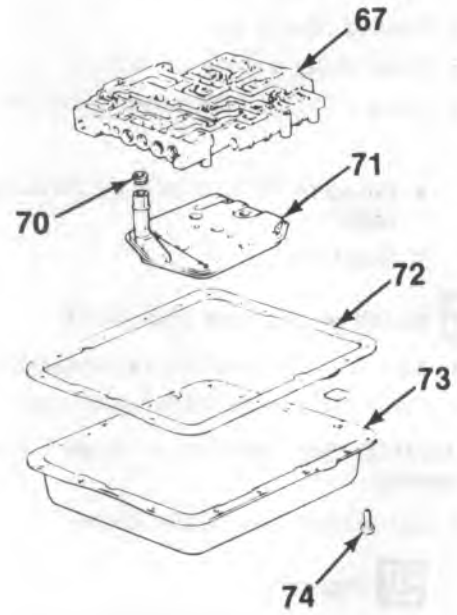

67. Valve Body
70. Seal
71. Filter
72. Gasket
73. Oil Pan
74. Bolts

F-6968

Figure 60—Transmission Fluid Replacement

GOVERNOR

Remove or Disconnect (Figure 61)

- Raise the vehicle.
- Lower the transmission if needed for clearance, refer to "Transmission Replacement" in this section.

1. Governor cover (46) and the seal or gasket as used.
   - Tap around the cover (46) flange with a punch.

   Important
   - Do not damage the governor cover. If the cover is damaged it must be replaced.
2. Governor (45).

Clean

- Governor using solvent. Air dry and blow out all passages using dry compressed air.

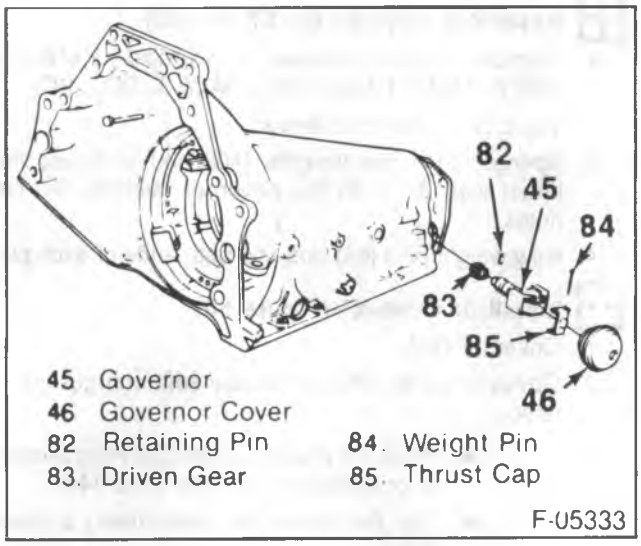

Figure 61—Governor

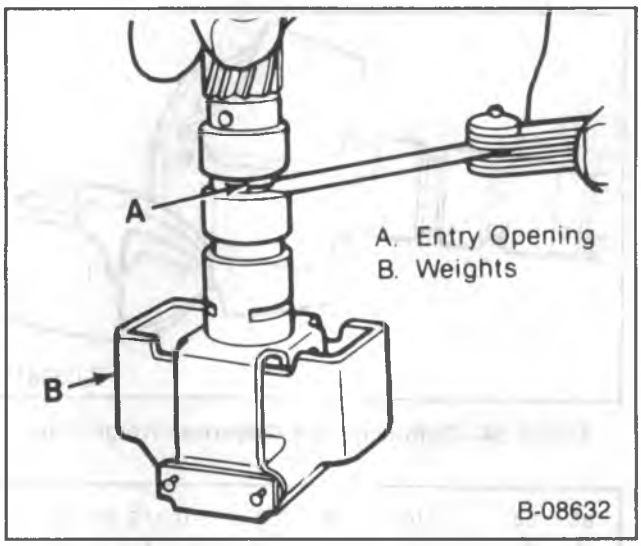

Figure 62—Measuring the Governor Valve Entry, Opening

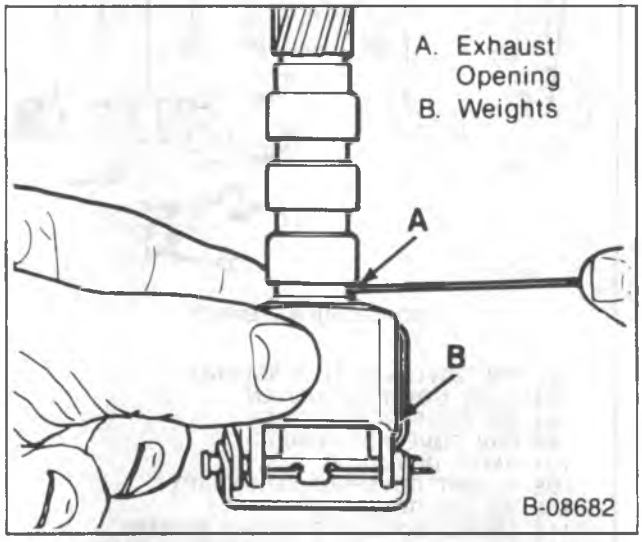

Figure 63—Measuring the Governor Valve Exhaust Opening

Inspect

- All parts for nicks, burrs, scoring and galling.
- Governor sleeve for binding.
- Governor valve for binding.
- Vehicle speed sensor for loose fit.
- Weight springs for kinks or damage.
- Weights for binding.
- Valve entry opening. With the weights held all the way outward, the opening should be 5.1 mm (0.020 in.) (figure 62).
- Valve exhaust opening. With the weights held all the way inward, the opening should be 5.1 mm (0.020 in.) (figure 63).
- If weights, sleeve, or valve do not operate freely, disassemble and clean the governor.

Important

- All the governor parts are a select fit. The governor must be replaced as an assembly if repair is needed.

Disassemble (Figures 64 and 65)

1. Remove the governor weight pins (84).
   - Cut off one end of each pin to remove them.
2. Remove the thrust cap (85), the weights (108 and 109) and the springs (110 and 111).
3. Remove the valve (107) from the sleeve.
4. Remove the vehicle speed sensor if needed. Refer to INSTRUMENT PANEL AND GAGES (SEC. 8C).
5. Clean the governor parts and inspect for damage.

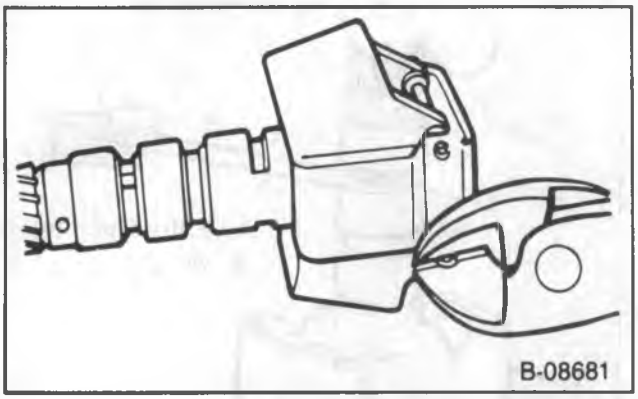

Figure 64—Removing the Governor Weight Pins

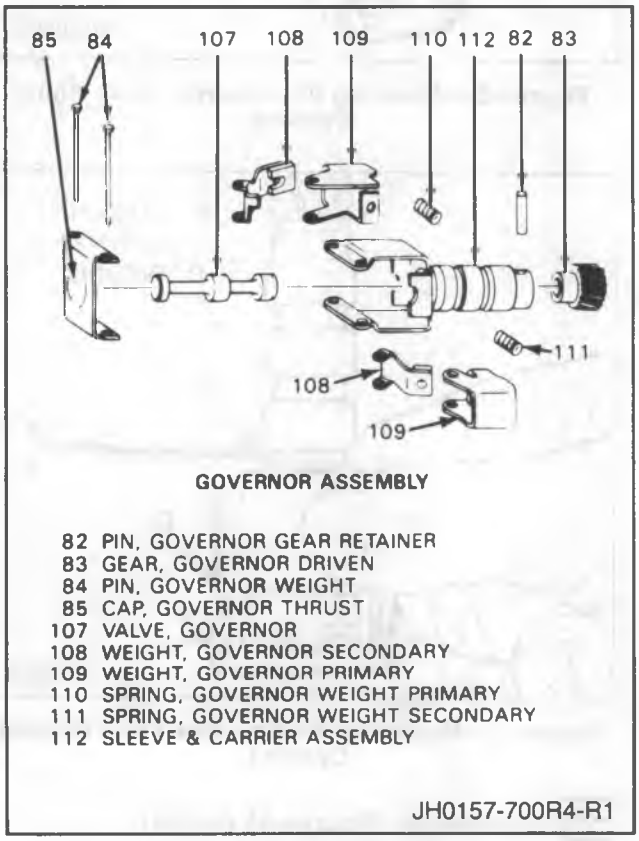

Figure 65—Governor Components

Assemble (Figures 65, 67 and 68)

1. Vehicle speed sensor, if needed. Refer to INSTRUMENT PANEL AND GAGES (SEC. 8C).
2. Valve (107) into the sleeve.
3. Springs (110), the weights (108 and 109) and the thrust cap (85) onto the governor, aligning the pin holes.
4. New weight pins (84) and crip both ends of each pin.

Install or Connect (Figure 60)

1. Governor (45).
2. Governor cover (46) and a new seal and gasket as used.
   - Put a thin coat of Loctite Cup Plug Sealant II, or equivalent, on the cover (46).
   - Tap the cover into place using a brass drift.

- Raise the transmission if it was lowered. Refer to "Transmission Replacement" in this section.
- Lower the vehicle.

3. Transmission fluid if needed. Refer to AUTOMATIC TRANSMISSION (SEC. 7A).

VEHICLE SPEED SENSOR REPLACEMENT

Remove or Disconnect (Figure 66)

1. Harness connector (101).
2. Bolt (129).
3. Vehicle speed sensor (127).
   - Have a suitable container to catch the fluid.
4. O-ring seal (126).

Install or Connect (Figure 66)

1. New speed sensor (127) and O-ring seal (126).
   - Coat the seal with a thin film of transmission fluid.

NOTICE: See "Notice" on page 7A1-1 of this section.

2. Bolt (129).

   Tighten
   - Bolt to 11 N•m (8 ft. lbs.).
3. Harness connector (101).
   - Refill fluid as required.

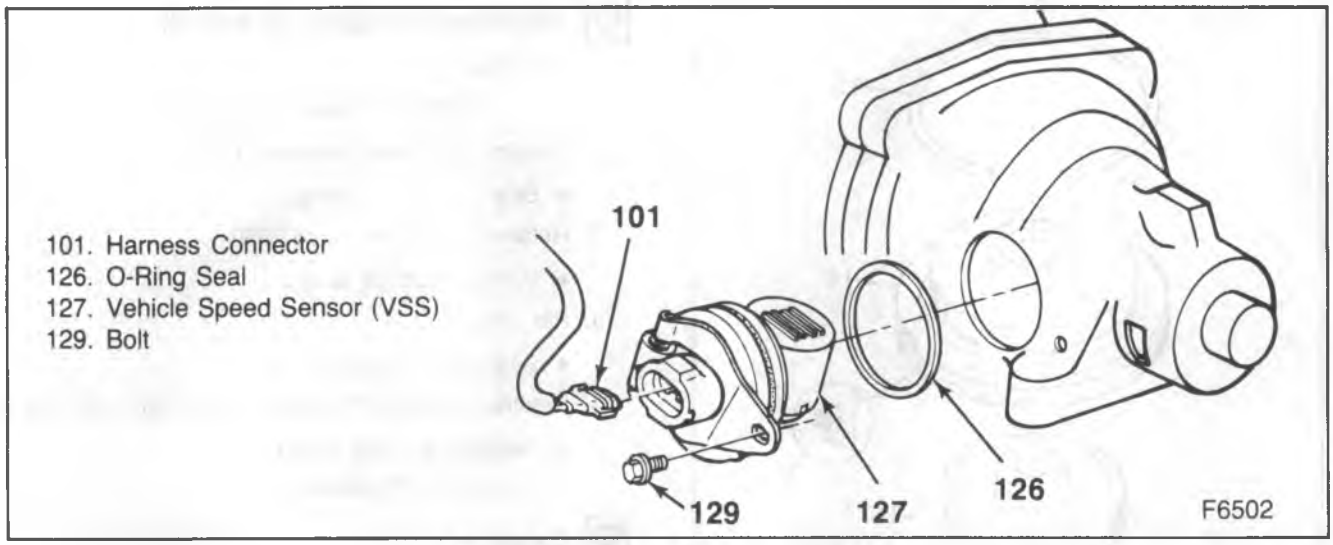

Figure 66—Speed Sensor Assembly

2-4 SERVO

Remove or Disconnect (Figures 67 and 68)

Tool Required:

J 29714-A Servo Cover Compressor.

- Raise the vehicle.
- Lower the transmission if needed for clearance. Refer to "Transmission Replacement" in this section.

1. Retaining ring and the cover (15) using J 29714-A.
2. Seal from the cover.
3. 4th apply piston (16).
4. 2nd apply piston assembly (18).
5. Spring (31).

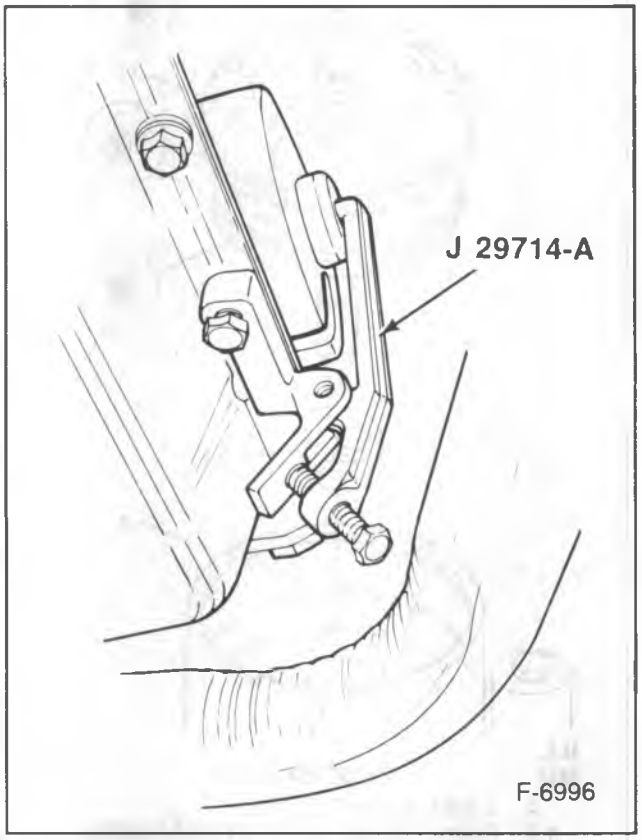

Figure 67—Removing the Servo Cover

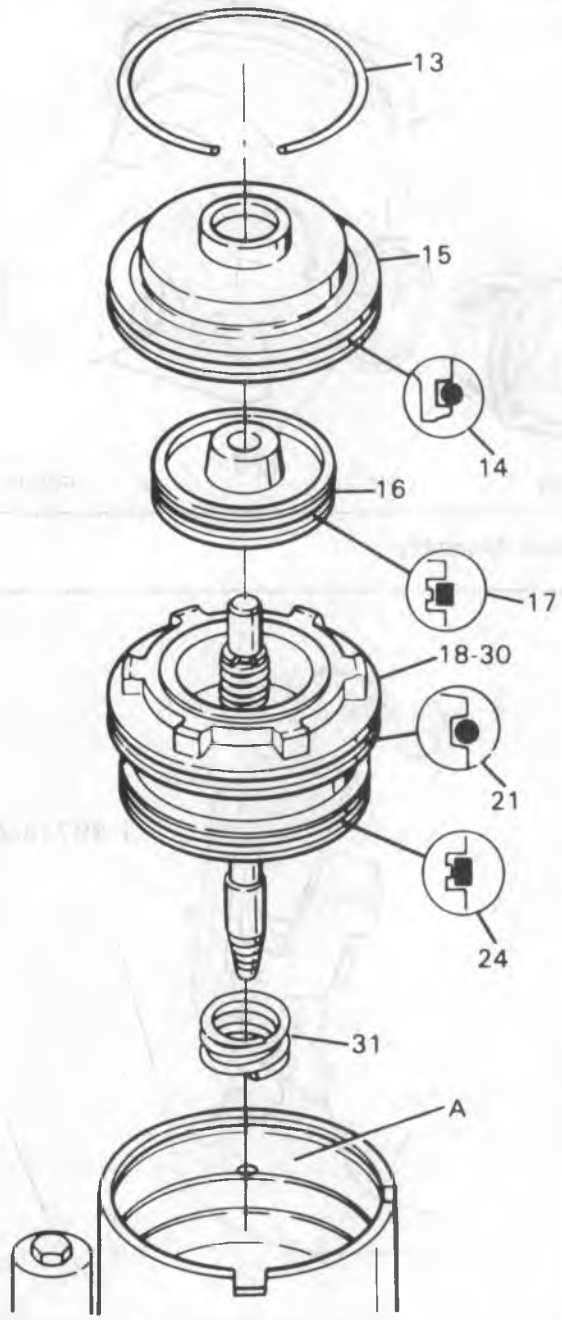

ILL. NO.	DESCRIPTION
A	CASE SERVO BORE
13	RING, SERVO COVER RETAINING
14	SEAL, "O" RING (2-4 SERVO COVER)
15	COVER, 2-4 SERVO
16	PISTON, 4TH APPLY
17	RING, OIL SEAL (4TH APPLY PISTON) (OUTER)
18-30	2ND APPLY PISTON ASSEMBLY
21	SEAL, "O" RING
24	RING, OIL SEAL (2ND APPLY PISTON) (OUTER)
31	SPRING, SERVO RETURN

JH0057 700R4

Figure 68—2-4 Servo

Disassemble (Figures 69 and 70)

Tool Required:

J 22269-01 Piston Compressor.

1. Housing (22) from the piston (25).
   - Seal from the housing.
2. Retainer ring from the pin (29).
   - Washer and the spring.
3. Pin (29).
   - Seals from the pin.
4. Retainer ring from the piston (25) using J 22269-01.
   - Retainer and the spring.
   - Seals from the piston.

Clean

- All parts using solvent. Air dry.

Inspect

- Pistons for porosity and damage.
- Seal grooves for damage.
- Cover for porosity and damage.
- Seals for nicks and cuts and binding in the seal grooves.
  - If damage is found, check for the cause of the damage.
- Springs for kinks and bending.
- Pin for wear and burrs.

Important

- Check the case servo bore for damage and sharp edges.

Measure (Figures 71 and 72)

Tools Required:

J 33037 Band Apply Pin Tool

Vernier calipers or micrometer

1. Servo pin length (figure 71).
   - Install pin and J 33037 as shown.
   - Apply 11.0 N•m (97 in lbs.) torque and check the gage slot (A).
     - If the white line is seen in the slot, the pin is correct.
     - If the white line is not seen in the slot, replace the pin using the chart.
   - Remove the pin and J 33037.
2. Piston and housing dimension (figure 72).
   - Measure the piston dimension (C).
   - Measure the housing dimension (D).
   - Check the chart for the proper dimensions.

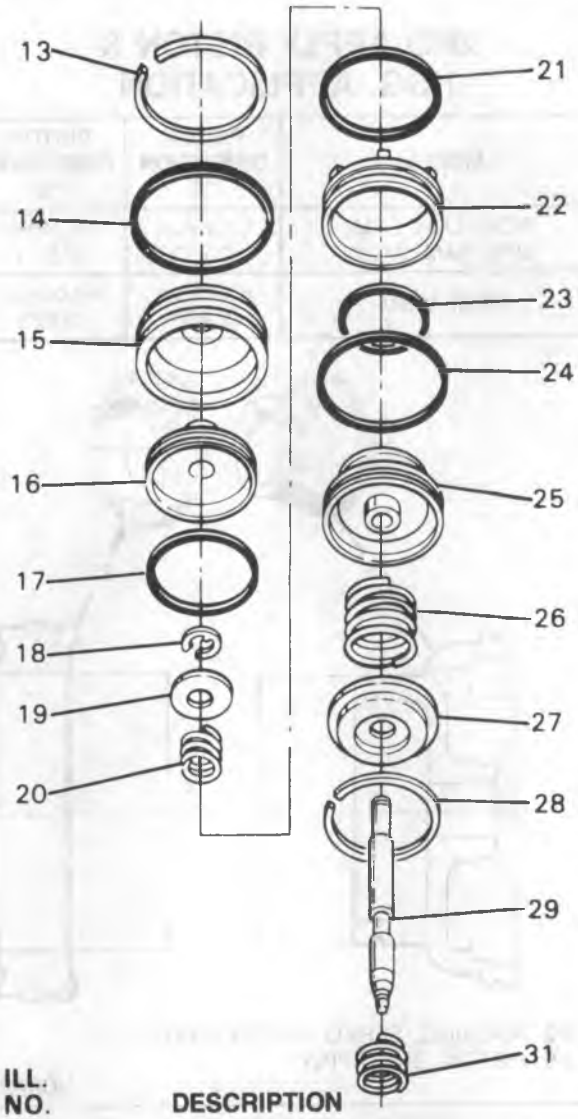

ILL. NO.	DESCRIPTION
13	RING, SERVO COVER RETAINING
14	SEAL, "O" RING (2-4 SERVO COVER)
15	COVER, 2-4 SERVO
16	PISTON, 4TH APPLY
17	RING, OIL SEAL (4TH APPLY PISTON) (OUTER)
18	RING, RETAINER (APPLY PIN)
19	WASHER, SERVO APPLY PIN
20	SPRING, SERVO APPLY PIN
21	SEAL, "O" RING
22	HOUSING, SERVO PISTON (INNER)
23	RING, OIL SEAL (2ND APPLY PISTON) (INNER)
24	RING, OIL SEAL (2ND APPLY PISTON) (OUTER)
25	PISTON, 2ND APPLY
26	SPRING, SERVO CUSHION
27	RETAINER, SERVO CUSHION SPRING
28	RING, RETAINER (2ND APPLY PISTON)
29	PIN, 2ND APPLY PISTON
31	SPRING, SERVO RETURN

JH005R-700R4

Figure 69—2nd Apply Piston Assembly

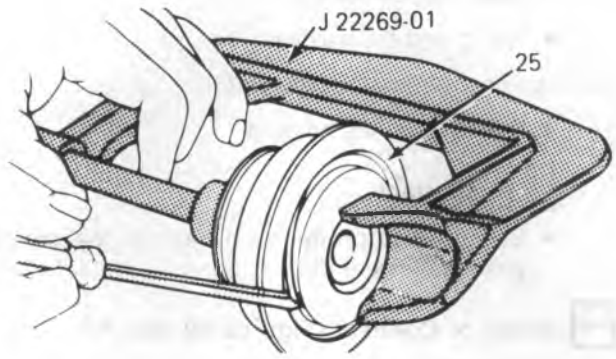

25 SECOND APPLY PISTON ASM.

L01010

Figure 70—Removing the Retainer Pin

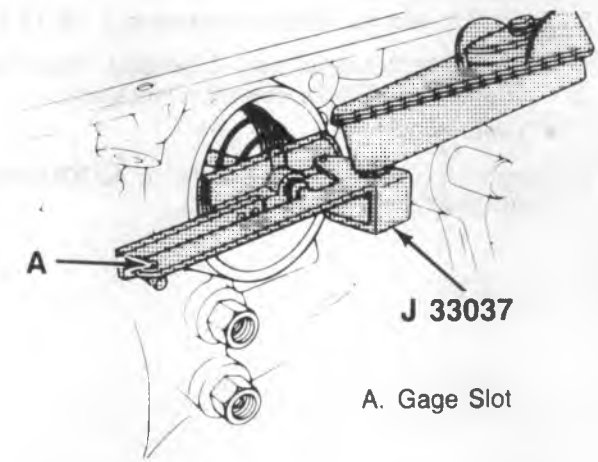

A. Gage Slot

Pin Is Preset At Factory And Must Not Be Re-adjusted

2-4 SERVO PIN SELECTION		
PIN LENGTH		PIN I.D.
mm	INCH	
66.37-66.67	2.61-2.62	2 Rings
67.74-68.04	2.67-2.68	3 Rings
69.11-69.41	2.72-2.73	Wide Band

L01017

Figure 71—Measuring the Servo Pin Length

Assemble (Figures 69 and 70)

Tool Required:

J 22269-01 Piston Compressor

1. Retainer and the spring in the piston (25).
   - New seals on the piston.
   - Retainer ring using J 22269-01.
2. Pin (29).
   - New seals on the pin.

3. Retainer ring on the pin.
   - Spring and the washer.
4. Housing (22) on the piston (25).
   - New seal on the housing.

Important

- Be sure the proper seals are in the proper positions (Figure 69).

Install or Connect (Figures 69 and 70)

Tool Required:

J 29714-A Servo Cover Compressor

1. Spring (31).
2. 2nd apply piston assembly (18).
3. 4th apply piston (16).
4. New seal on the cover.
5. Cover (15) and the retaining ring using J 29714-A.
   - Raise the transmission if needed. Refer to "Transmission Replacement" in this section.
   - Lower the vehicle.
6. Transmission fluid if needed. Refer to AUTOMATIC TRANSMISSIONS (SEC. 7A).

2ND APPLY PISTON & HSG. APPLICATION

MODEL	PISTON DIMENSION *A	PISTON DIMENSION **B
KCM, LAM, LCM LFM, RAM, WCM	57.85mm (2.28")	58.74mm (2.31")
WAM, WBM	63.10mm (2.48")	64.00mm (2.52")

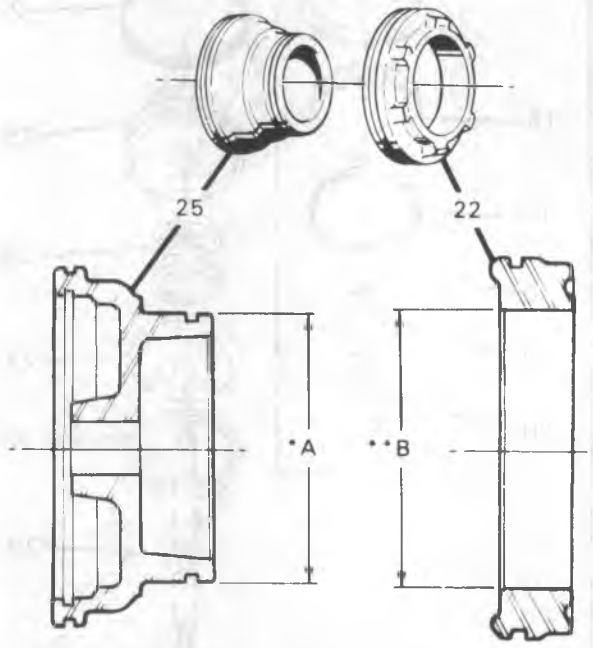

22 HOUSING, SERVO PISTON (INNER)
25 PISTON, 2ND APPLY

V0592

Figure 72—2nd Apply Piston and Housing Dimensions

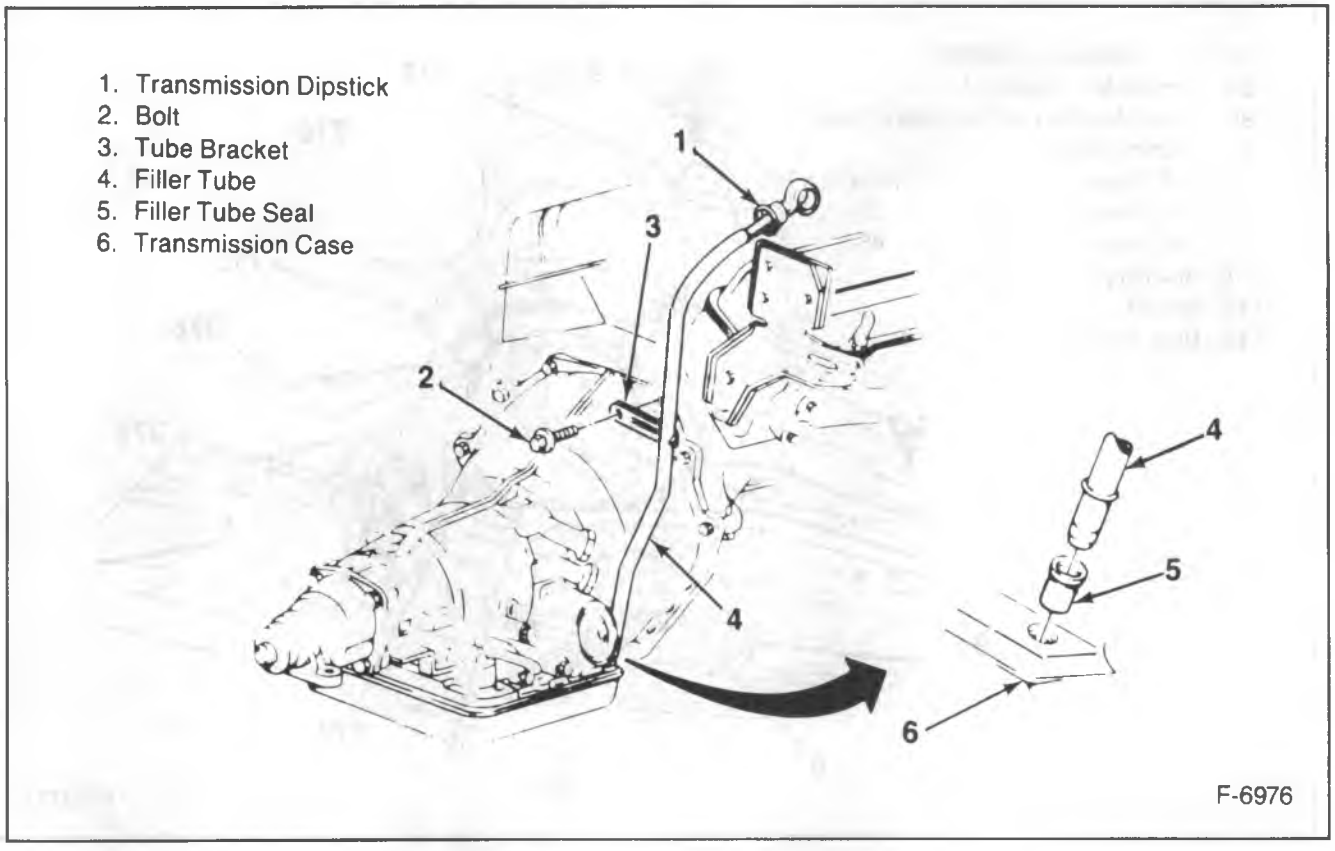

Figure 73—Filler Tube Replacement

FILLER TUBE REPLACEMENT

Remove or Disconnect (Figure 73)

1. Negative battery cable.
2. Transmission dipstick (1).
3. Air cleaner.
4. Bolt (2) from the tube bracket (3).
   - Raise the vehicle.
5. Filler tube (4) from the transmission.
   - Pull filler tube (4) up from the transmission.
6. Filler tube seal (5) from the filler tube (4).

Clean

- Metal parts using solvent. Do not allow solvent to enter the transmission. Air dry.

Install or Connect (Figure 73)

1. New filler tube seal (5) into the transmission case (6).
2. Filler tube (4) into the filler tube seal (5).
3. Tube bracket bolt (2).
   - Lower the vehicle.
4. Air cleaner.
5. Transmission dipstick (1).
6. Negative battery cable.

AUXILIARY VALVE BODY

Remove or Disconnect (Figure 74)

1. Negative battery cable.
   - Raise the vehicle and suitably support.
   - Place drain pan under transmission oil pan.
2. Oil pan bolts from the front and sides only.
   - Loosen rear bolts approximately (4) turns.

NOTICE: Do not damage case or oil pan sealing surfaces.

- Lightly tap oil pan with rubber mallet or pry to allow fluid to drain.

3. Remaining oil pan bolts, oil pan and gasket.
4. Oil filter and "O" ring.
   — "O" ring may be stuck in case.
5. Tube clamp (97).
6. Tube (96).
7. Bolts (374 thru 376), auxiliary valve body (377), and check ball.

Inspect

- Refer to the Light Duty Truck Unit Repair Manual for inspection and disassembly procedures.

NOTICE: For steps 2 and 7 see "Notice" on page 7A1-1 of this section.

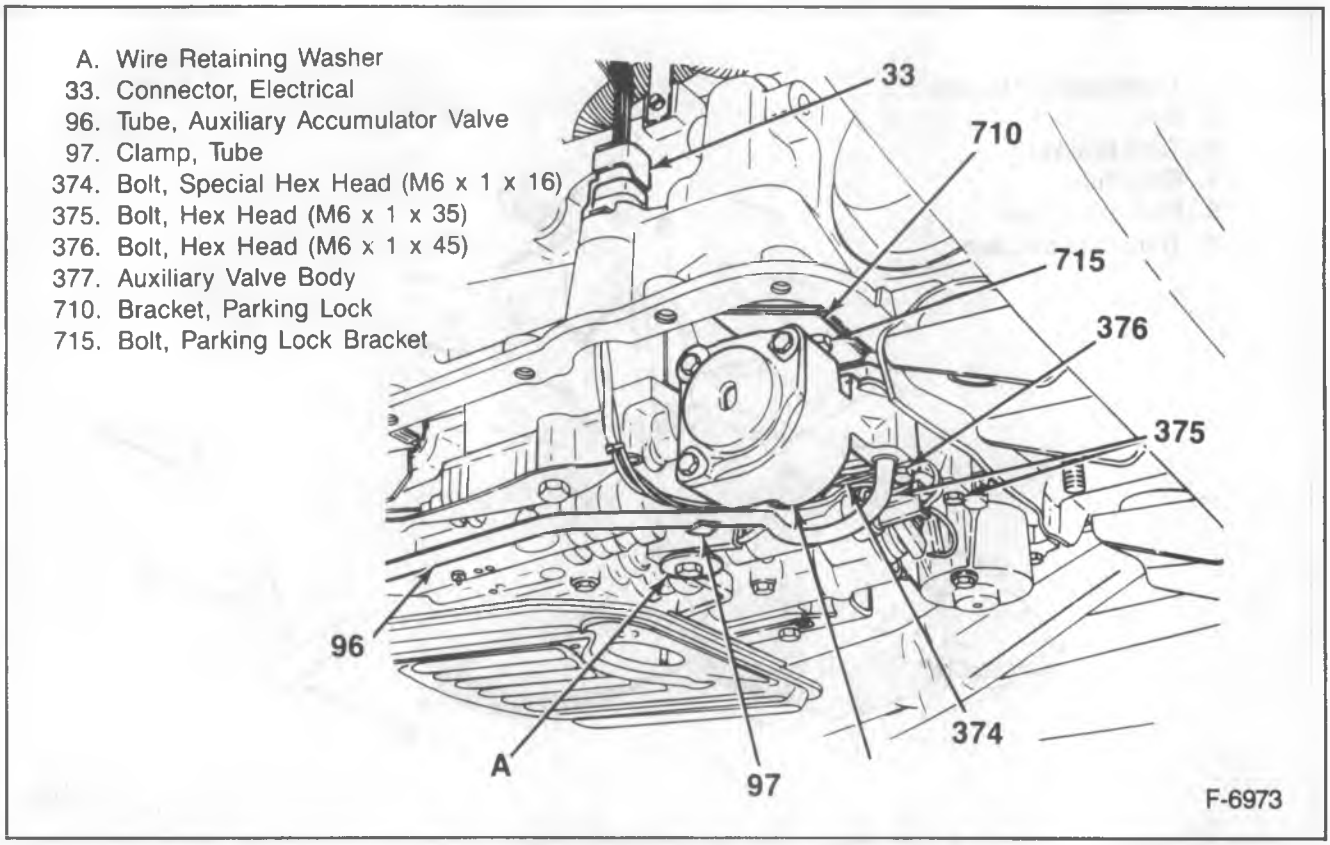

Figure 74—Auxiliary Valve Body

Install or Connect (Figure 74)

1. Check ball in valve body.
   — If necessary, use Transjel™ J 36850 or equivalent to hold in place.
2. Auxiliary valve body to valve body with bolts (374 thru 376).

Tighten

- 11 N•m (97 lb. in.).

3. Tube (96).
4. Clamp (97).
5. New oil filter and O-ring.
   — Coat O-ring with Transjel™ J 36850 or equivalent.
6. Oil pan with new gasket.
   - All traces of old gasket material must be removed from case and pan.
7. Oil pan bolts.

Tighten

- 20 N•m (15 lbs. ft.).

- Lower vehicle.

8. Negative battery cable.

Adjust

- Fluid level. Refer to AUTOMATIC TRANSMISSION (SEC. 7A).
  — Dexron II Automatic Transmission Fluid.
  — Inspect for leaks.

VALVE BODY

Remove or Disconnect (Figures 75 and 76)

1. Negative battery cable.
2. T.V. cable at throttle lever.

- Raise vehicle and suitably support.
- Place drain pan under transmission oil pan.

3. Oil pan bolts from the front and sides.

- Loosen rear oil pan bolts approximately 4 turns.

NOTICE: Do not damage transmission case or oil pan sealing surfaces.

- Lightly tap oil pan with rubber mallet or pry to allow fluid to drain.

4. Remaining oil pan bolts, oil pan and gasket.
5. Oil filter and O-ring.
   — O-ring may be stuck in case.
6. Valve body bolts.
   — Manual control valve link from range selector inner lever.
   — Throttle lever bracket from T.V. link.

- Spacer plate and check balls.

Clean

- Oil pan and case of gasket material.
- Valve body components.

Inspect

- Refer to the Light Duty Truck Unit Repair Manual for inspection and disassembly procedures.

Install or Connect (Figures 75 and 76)

1. Check balls in case (figure 75).
   — If necessary, use Transjel™ J 36850 or equivalent to hold in place.
2. Valve body spacer plate and gaskets.
3. Valve body.
4. Valve body bolts.

Tighten

- Bolts to 11 N•m (97 lb. in.).

5. New O-ring seal and oil filter.
   - Coat O-ring seal with Transjel™ J 36850 or equivalent.

NOTICE: See "Notice" on page 7A1-1 of this section.

6. New gasket, oil pan and bolts.

Tighten

- 11 N•m (97 lbs. in.).

7. Lower vehicle.
8. Negative battery cable.

Adjust

- Fluid level. Refer to AUTOMATIC TRANSMISSION (SEC. 7A).
  — Dexron II Automatic Transmission Fluid.
  — Inspect for leaks.
- T.V. cable.

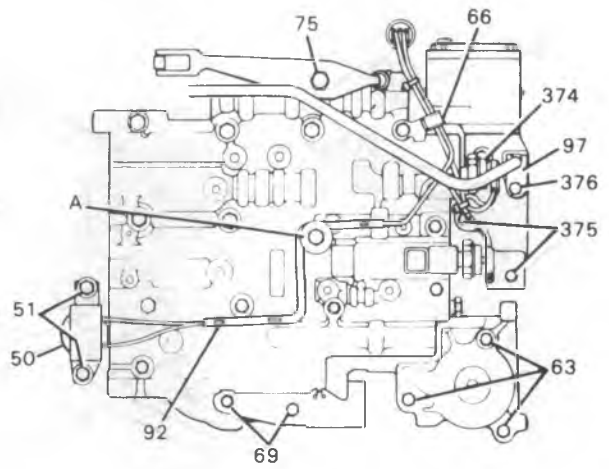

A WASHER WIRE RETAINER
50 SOLENOID ASSEMBLY
51 BOLT, HEX WASHER HEAD (SOLENOID)
63 BOLT, ACCUMULATOR COVER
66 CLIP, ELECTRICAL WIRE
69 BOLT, VALVE BODY
75 BOLT, MANUAL DETENT SPRING
92 CONDUIT, SOLENOID WIRE
97 CLAMP, AUXILIARY TUBE
374 BOLT, SPEC. HEX WASHER HEAD (M6 X 1 X 18)
375 BOLT, HEX HEAD (M6 X 1 X 35)
376 BOLT, HEX HEAD (M6 X 1 X 45)

F-7174

Figure 75—Valve Body Bolt Locations

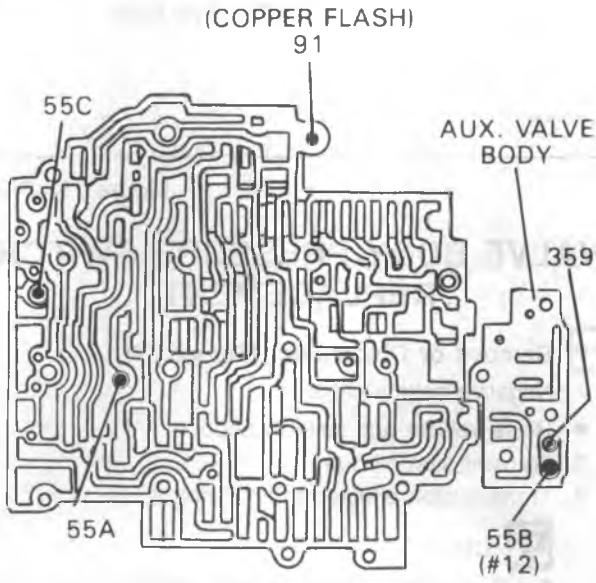

55A #2 CHECKBALL (3RD CLUTCH ACCUM.)
55B #12 CHECKBALL (FORWARD CLUTCH)
55C #6 CHECKBALL (DRIVE 3)
91 #10 CHECKBALL (T.V. EXHAUST)
359 CUP PLUG — ORIFICE

F-7184

Figure 76—Valve Body Checkball Locations

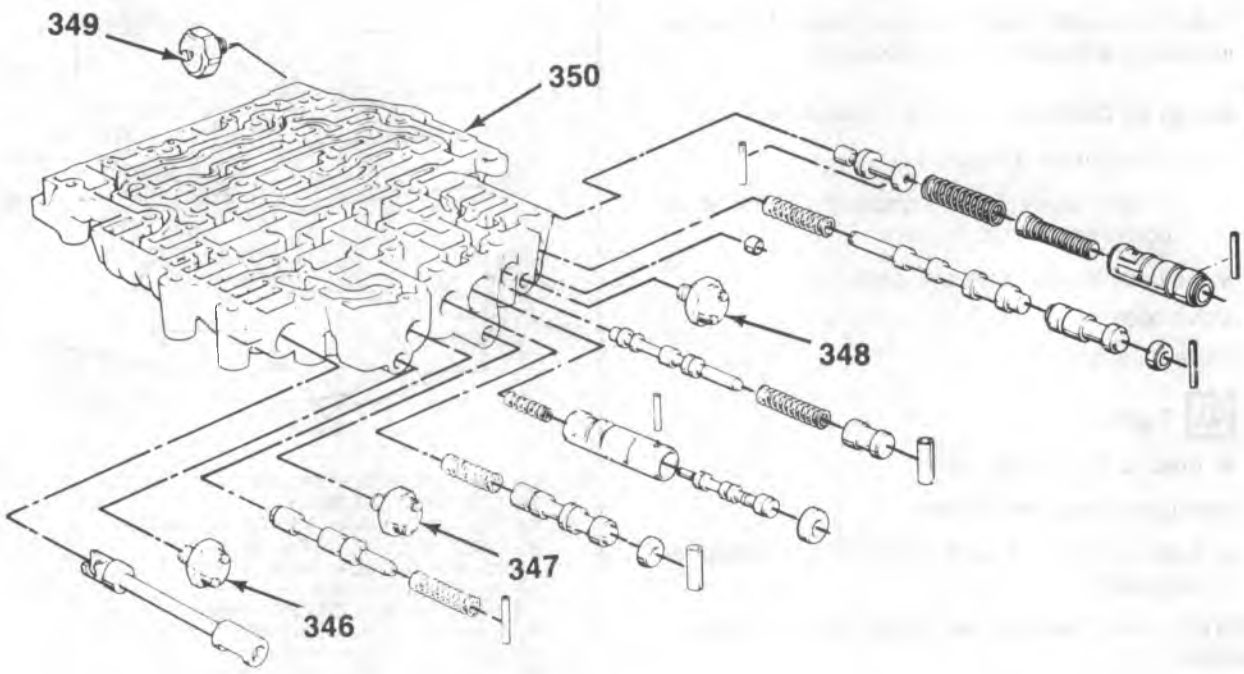

346. Switch Asm., Pressure (3rd Clutch)
347. Switch Asm., Pressure (4-3 Pulse)
348. Switch Asm., Pressure (4th Clutch)
349. Switch Asm., Pressure (T.C.C. Signal)
350. Valve Body

F-7183

Figure 77—Pressure Switch Location

VALVE BODY PRESSURE SWITCH REPLACEMENT

Remove or Disconnect (Figure 77)

1. Negative battery cable.
- Raise vehicle and suitably support.
2. Transmission oil pan.
3. Transmission oil filter and "O" ring.

Clean

- Oil pan and case of gasket material.
- Valve body components.

4. Pressure switch (346, 347, 348 or 349).

Install or Connect (Figure 77)

1. New pressure switch (346, 347, 348 or 349).
2. New transmission oil filter and O-ring.
3. Transmission oil pan.
4. Transmission fluid. Refer to "Specifications" for the proper amount.
5. Lower the vehicle.
6. Negative battery cable.

REAR EXTENSION OIL SEAL

Remove or Disconnect (Figure 79)

- Raise the vehicle.
1. Transmission fluid.
2. Propeller shaft. Refer to PROPELLER SHAFT (SEC. 4A).
3. Seal.

Install or Connect (Figure 78)

Tool Required:

J 21426 Extension Housing Oil Seal Installer

1. New seal using J 21426 or J 21359 as needed.
   - Coat the outer edge of the seal case with a non-hardening sealer GM p/n 1052917 (or equivalent).

2. Propeller shaft. Refer to PROPELLER SHAFT (SEC. 4A).
   - Lower the vehicle.
3. New transmission fluid. Refer "Specifications" for the proper amount.

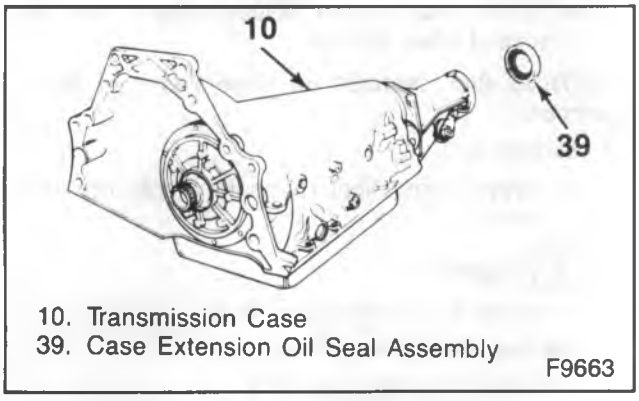

Figure 78—Rear Oil Extension Seal

REAR EXTENSION HOUSING BUSHING

Tool Required:

J 38119 Rear Case Extension Bushing Remover and Installer

Important

- J 38119 includes two expansion tubes — one silver and one black. Use the BLACK tube for GM transmission.

Remove or Disconnect (Figure 79)

1. Propshaft from rear of transmission.
2. Rear extension housing seal.
   - Install J 38119.
3. Bushing using J 38119.

Install or Connect (Figure 79)

1. New bushing using J 38119.
   - Remove J 38119.
2. New rear extension housing seal.
3. Propshaft to rear of transmission.

TRANSMISSION REPLACEMENT

If the transmission is being lowered for clearance, perform steps 1-8 only.

Remove or Disconnect (Figure 80)

Tool Required:

J 21366 Converter Holding Strap

1. Negative battery cable.
2. Air cleaner, and the TV cable from the throttle linkage, if the transmission is being removed.
   - Raise the vehicle.
3. Transmission oil pan.
4. Transmission mount nut at crossmember.
5. Shift linkage.
6. Propeller shaft, refer to PROPELLER SHAFT (SEC. 4A).
   - Front propeller shaft, if used, from the transfer case.
7. Transmission crossmember.
   - Support the transmission, and the transfer case, if used, with a transmission jack.

Important

- Do not stretch or damage any cables, wires or other components when lowering the transmission.

8. Transmission far enough for clearance to reach other components.
9. Dipstick tube (421) and the seal.
   - Cover the opening in the transmission.

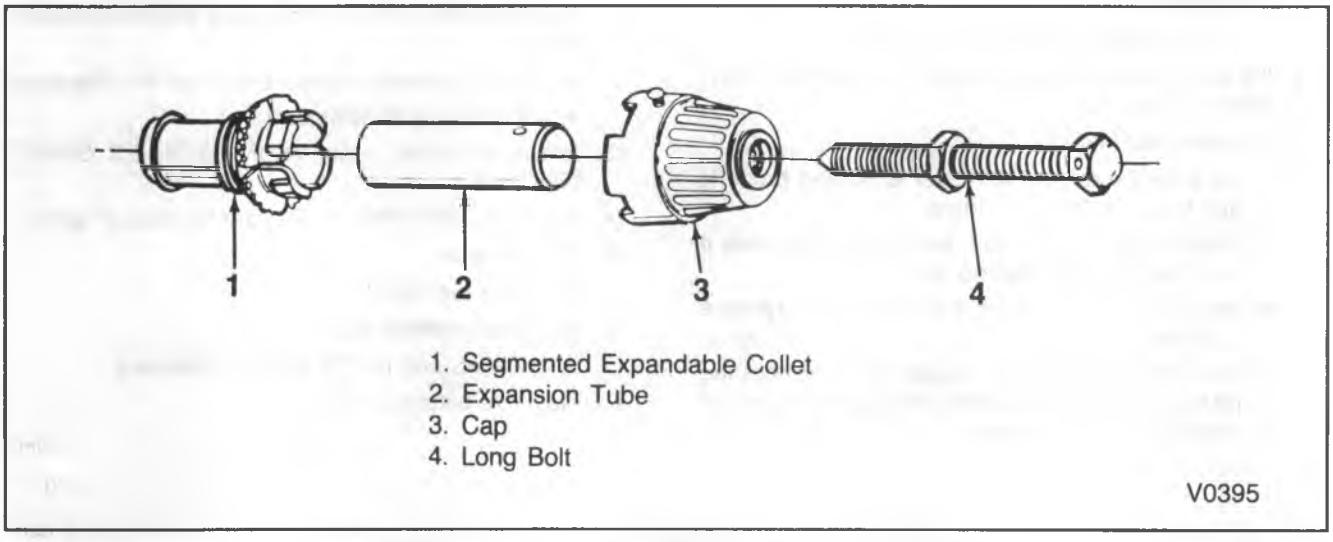

Figure 79—Rear Extension Bushing Remover and Installer

10. Electrical connectors from the transmission.
11. Cooler lines (423).
    - Cap all openings in the transmission and the lines.
12. Transfer case shifter and move it aside, refer to TRANSFER CASE (SEC. 7D).
13. Dampener and the support, if used.
14. Transmission support braces (422).
    - Note the location of the braces, they must be installed in the same positions.
15. Converter housing cover (428).
    - Mark the flywheel and the torque converter alignment.
16. Bolts (430).

Important

- Support the engine with a jack or hoist before disconnecting the transmission.

17. Screws (426).
    - Note the location of any brackets or clips and move them aside.
    - Slide the transmission straight back off the locating pins (A) and install J 21366.
18. Transmission (425) from the vehicle.

Clean

- Transmission case using a solvent dampened cloth, do not allow solvent to enter the transmission. Air dry.
- All hardware and flywheel cover using solvent. Air dry.

Inspect

- All parts for wear and damage.
- All seals and fittings for signs of leakage.
- Torque converter for stripped or broken weld nuts or screw holes.
- Transmission case for porosity.

Install or Connect (Figure 80)

Tool Required:

J 21366 Converter Holding Strap

- If the transmission was lowered for clearance only, perform steps 13-20.

1. Transmission (425).
    - Be sure the torque converter is seated properly and that J 21366 is in place.
    - Support the transmission, and the transfer case if used, with a transmission jack.
    - Raise the transmission into place and remove J 21366.
    - Slide the transmission straight onto the locating pins (A) while lining up the marks on the flywheel and the torque converter.

Important

- The torque converter must be flush onto the flywheel and rotate freely by hand.

2. Screws (426).
    - All brackets, clips and harnesses must be positioned as they were when removed.
    - Do not install the dipstick tube or the transmission support brace screws.

NOTICE: See "Notice" on page 7A1-1 of this section.

3. Screws (430).
    - Screws finger tight to insure proper converter seating.

Tighten

- Screws to 68 N•m (50 ft. lbs.).

- Remove the engine hoist or jack.

4. Converter housing cover (428).
    - Hook the cover under the lip of the engine oil pan.
5. The support and dampener, if used.
6. Transmission support braces (422).
    - The braces must be installed in the positions from which they were removed.
7. Transfer case shifter, refer to TRANSFER CASE (SEC. 7D).
8. Cooler lines (423).
    - Uncover the openings.
    - Do not twist or bend the lines.
9. Electrical connectors to the transmission.
10. Dipstick tube (421) with a new seal.
    - Uncover the opening and install the seal first.
    - Install screw (426).
11. Transmission in place.

Important

- Do not pinch or damage any cables, wires or other components when raising the transmission.

12. Transmission crossmember and the transmission mount.
    - Any components that were removed for clearance.
    - Remove the transmission jack.
13. Propeller shaft, refer to PROPELLER SHAFT (SEC. 4A).
14. Front propeller shaft to the transfer case, if used.
15. Shift linkage.
    - Lower the vehicle.
16. New transmission fluid.
17. Air cleaner, and the TV cable, if removed.
18. Negative battery cable.

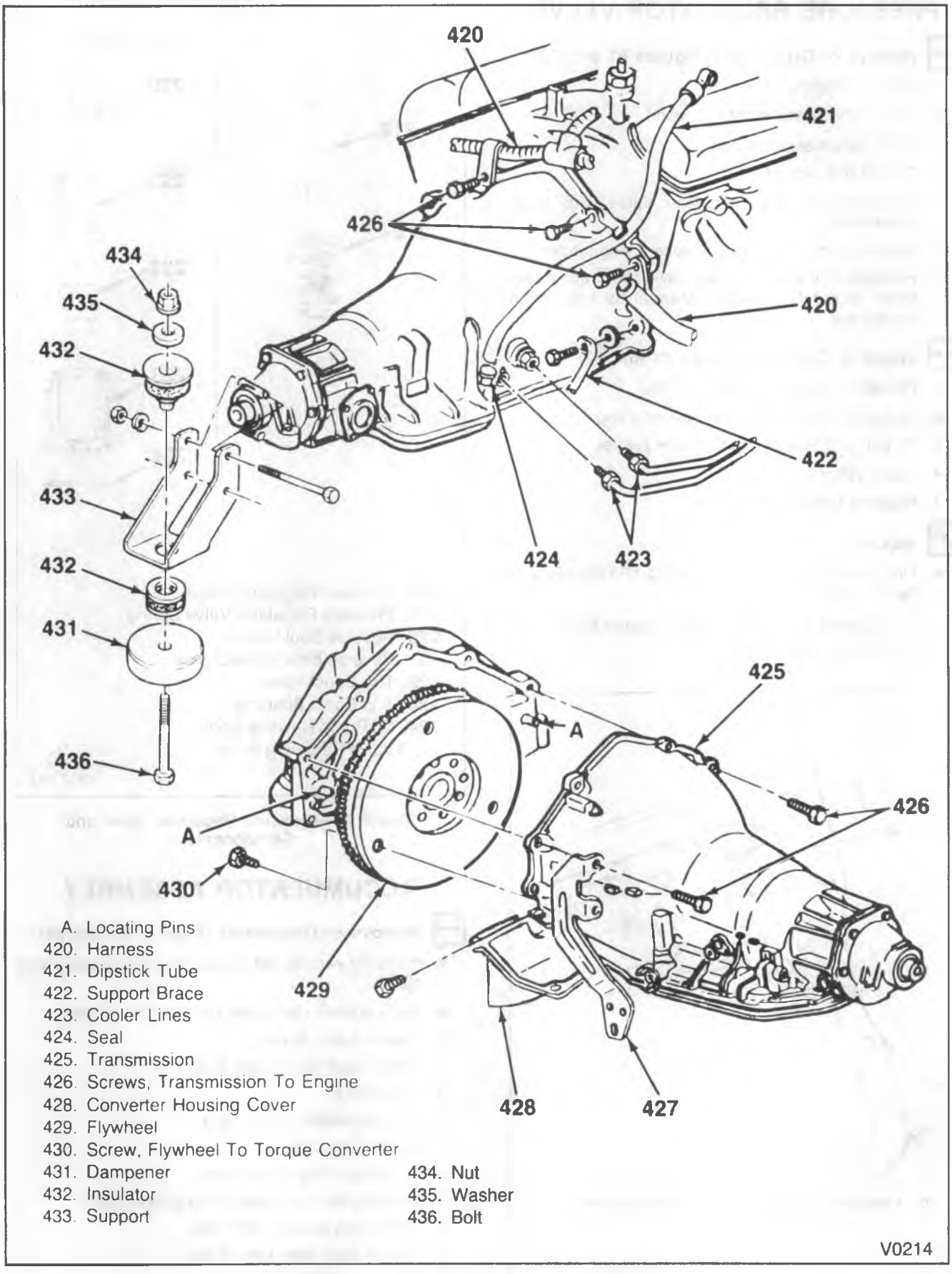

Figure 80—Transmission and Components

PRESSURE REGULATOR VALVE

Remove or Disconnect (Figures 81 and 82)

1. Negative battery cable.
- Raise vehicle and suitably support.
- Drain transmission oil pan.
2. Oil pan and screen.
- Compress pressure regulator valve with small screwdriver.
3. Retaining ring and slowly release spring tension.
4. Pressure regulator bore plug, valve, spring and guide. Refer to the Unit Repair Manual for inspection procedures.

Install or Connect (Figures 81 and 82)

1. Pressure regulator valve assembly.
- Compress valve and insert retaining ring.
2. Oil pan and screen, using a new gasket.
- Lower vehicle.
3. Negative battery cable.

Adjust

- Fluid level. Refer to AUTOMATIC TRANSMISSION (SEC. 7A).
  - — Dexron II Automatic Transmission Fluid.
  - — Inspect for leaks.

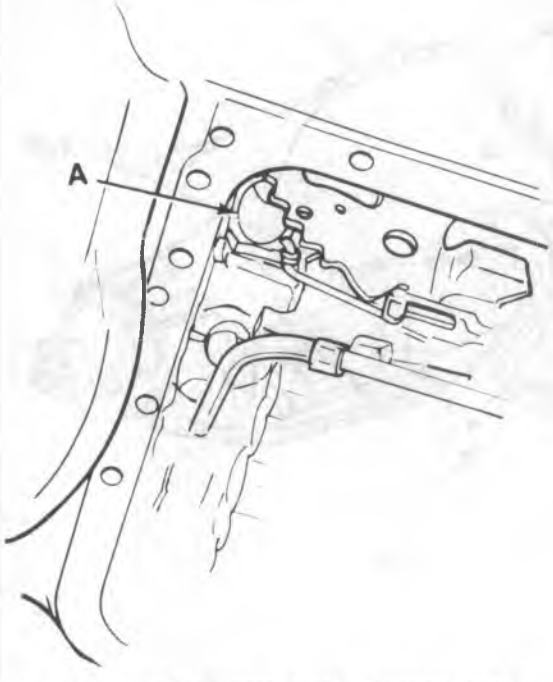

A. Pressure Regulator Valve Access Hole

F-7141

Figure 81—Pressure Regulator Valve Location

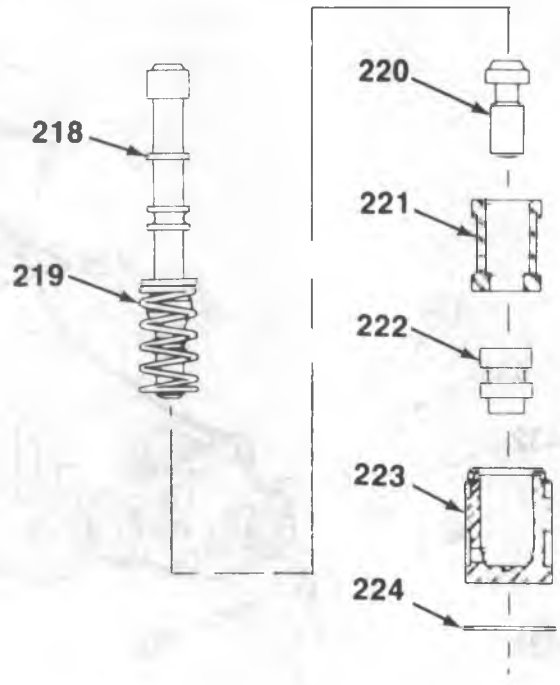

218. Pressure Regulator Valve
219. Pressure Regulator Valve Spring
220. Reverse Boot Valve
221. Reverse Boot Valve Sleeve
222. T.V. Boost Valve
223. T.V. Boost Bushing
224. Oil Pump Reverse Boot Valve Retaining Ring

F-7181

Figure 82—Pressure Regulator Valve and Components

ACCUMULATOR ASSEMBLY

Remove or Disconnect (Figures 83 and 84)

- Raise the vehicle and support it using suitable safety stands.
- Place a drain pan under transmission oil pan.
1. Transmission oil pan.
2. Accumulator cover bolts (63).
3. Cover (62).
4. 1-2 accumulator spring (61).
5. Oil seal ring (60).
6. 1-2 accumulator spring (59).
7. Spacer plate from valve body gasket (89).
8. Valve body spacer plate (56).
9. Spacer plate case gasket (88).
10. 3-4 accumulator spring (54).
11. Oil seal ring (53).

12. 3-4 accumulator piston (52).
13. Accumulator piston pin (77).

Inspect

- The 1-2 accumulator cover (62) for:
  - — Porosity or damage.
  - — Scored piston wall.
  - — Plugged oil passage.
- The 1-2 accumulator piston (61) and the 3-4 accumulator piston (52) for:
  - — Porosity.
  - — Ring groove damage.
  - — Pin hole damage.

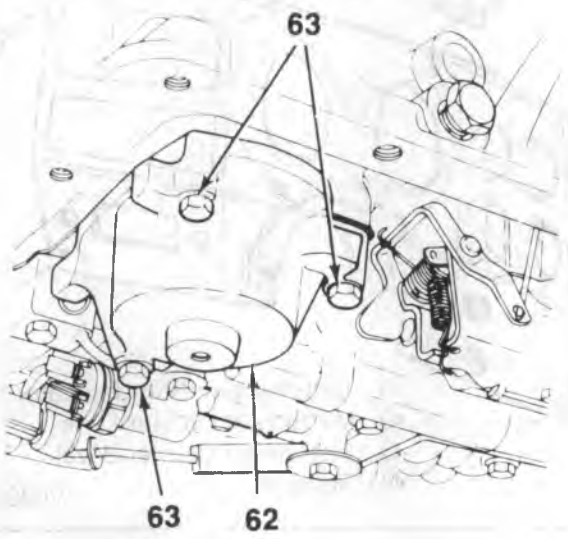

62. Accumulator Cover
63. Accumulator Cover Bolts

F-7176

Figure 83—Accumulator Cover Location

- 1-2 accumulator spring (59) and 3-4 accumulator spring (54) for distortion or damage.
- Spacer plate (56) and gaskets (88 and 89) for damage.

Install or Connect (Figures 83 and 84)

1. Accumulator piston pin (77).
2. 3-4 accumulator piston (52).
3. Oil Seal ring (53).
4. 3-4 accumulator spring (54).
5. Spacer plate to case gasket (88).
6. Valve body spacer plate (56).
7. Spacer plate to valve body gasket (89).
8. 1-2 accumulator spring (59).
9. Oil seal ring (60).
10. 1-2 accumulator piston (61).
11. Cover (62).
12. Accumulator cover bolts (63).
13. Transmission oil pan.
14. New transmission fluid. Refer to "Specifications" for the proper amount.

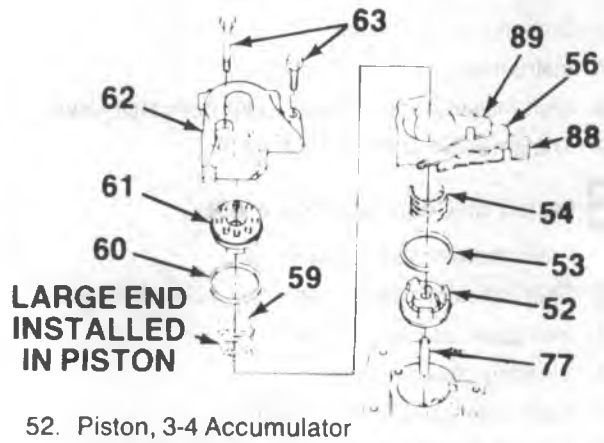

52. Piston, 3-4 Accumulator
53. Ring, Oil Seal (3-4 Accumulator Piston)
54. Spring, 3-4 Accumulator
56. Plate, Valve Body Spacer
59. Spring, 1-2 Accumulator (Conical)
60. Ring, Oil Seal (1-2 Accum. Piston)
61. Piston 1-2 Accumulator
62. Cover & Pin Assembly, 1-2 Accum.
63. Bolt, Accumulator Cover
77. Pin, Accumulator Piston
88. Gasket, Spacer Plate to Case
89. Gasket, Spacer Plate to Valve Body

F-7177

Figure 84—1-2 and 3-4 Accumulator Assembly

Models	1-2 Accumulator Spring Color	3-4 Accumulator Spring Color
LAM, LCM, LFM, WCM	ORANGE	RED
KCM, RAM	ORANGE	VIOLET
WBM	ORANGE	RED

GMTB-3175-2A

Accumulator Spring Chart

SHIFT INDICATOR REPLACEMENT

Remove or Disconnect (Figure 85)

1. Battery ground cable from the battery.
2. Headlamp switch knob.
   - Push in retainer button on switch body.
   - Pull out the knob assembly.
3. Radio control knobs.
4. Clock adjuster stem if equipped.
5. Instrument cluster bezel (43).
6. Steering column cover.
7. Instrument cluster lens (42).
8. Shift indicator needle cable clip from shift bowl.
9. Transmission shift indicator (41).

Install or Connect (Figure 85)

1. Transmission shift indicator (41).
2. Shift indicator needle cable clip from shift bowl.
3. Instrument cluster lens (42).
4. Steering column cover.
5. Instrument cluster bezel (43).
6. Clock adjuster stem if equipped.
7. Radio control knobs.
8. Headlamp switch knob assembly.
9. Negative battery cable.

SHIFT INDICATOR ADJUSTMENT

IMPORTANT: Care must be taken to assure that the cable rests on the shift bowl and not on the column jacket.

1. Attach indicator needle cable clip to shift bowl.
2. Check for proper operation. Indicator pointer should be centrally located on "N" (Neutral).

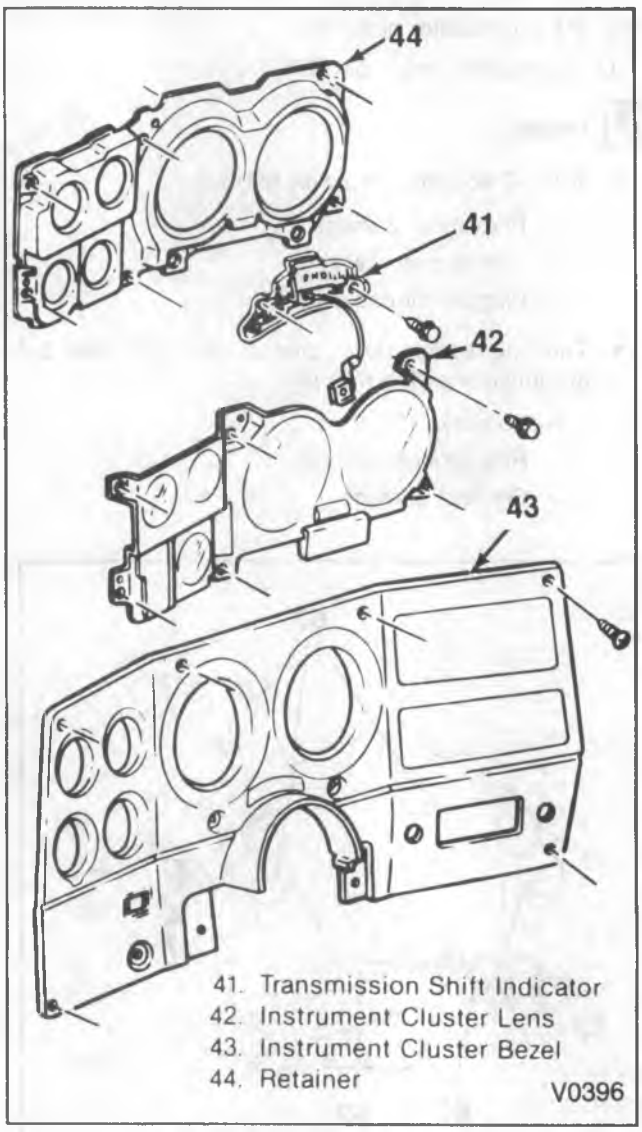

Figure 85—Shift Indicator

TRANSMISSION COOLER FLUSHING

Transmission oil cooler flushing must be performed whenever a transmission is removed for service. It is essential to flush the oil cooler after SRTA installation, major overhaul, if fluid contamination is suspected, or in any case of pump or torque converter replacement.

To ensure the complete transmission system service it is recommended that the flush procedure be performed after the overhauled or replacement assembly has been reinstalled in the vehicle.

Tools Required:

J 35944 Cooler Flushing Tool

J 35944-20 or J 35944-CSE Biodegradable Flushing Solution

Preparation

1. After overhauled or service replacement transmission is reinstalled in vehicle, do not reconnect oil cooler pipes.
2. Remove oil fill cap on J 35944 and fill can with 0.6 liter (20-21 ounces) of flushing solution. Do not overfill or tool will need to be recharged with air before backflush. Follow manufacturer's suggested procedures for proper handling of solution.

IMPORTANT: Do not substitute with any other solution. The flushing tool is designed to use only this concentrate. Use of any other solution can result in damage to the tool, cooler components, or improper flushing of the cooler.

3. Secure fill cap and pressurize the flusher can with shop air to 550-700 kPa (80-100 psi).

NOTICE: Shop air supply must be equipped with a water/oil filter and not exceed 825 kPa (120 psi).

4. Connect the discharge hose to the transmission end of the oil cooler pipe that goes to the top fitting at the radiator.
5. Clip discharge hose onto the oil drain container.
6. Mount the flushing tool to undercarriage of vehicle with the hook provided and connect the hose from the flushing tool to the remaining oil cooler pipe.
7. With the water valve on the tool in the off position, connect the water hose from the water supply to the tool.
8. Turn on the water supply at the faucet.

Initial Flush

9. Switch the water valve on the tool to the on position and allow the water to flow through the oil cooler for 10 seconds to remove the supply of transmission fluid in the system.

NOTICE: If water does not flow through the oil cooler (system is completely plugged) do not continue flushing procedure. Turn the water off immediately and inspect the pipes and cooler for restriction. Replace the oil pipe(s) and/or cooler.

10. Switch the water valve on the tool to the off position and clip the discharge hose onto a five gallon pail with a lid or position a shop towel over the end of the discharge hose to prevent splash. Discharge will foam vigorously when solution is introduced into water stream.
11. Switch the water valve on the tool to the on position and depress the trigger to mix flushing solution into the water flow. Use the bale clip provided on the handle to hold the trigger down.
12. Flush oil cooler with water and solution for two minutes. During this flush, attach the air supply to the air valve located on plumbing of tool for 3 to 5 seconds at the end of every 15-20 second interval to create a surging action.

NOTICE: Shop air supply must be equipped with a water/oil filter and not exceed 825 kPa (120 psi).

13. Release the trigger and switch the water valve on the tool to the off position.
14. Disconnect both hoses from the oil cooler pipes.

Backflush

15. Connect hoses to the oil cooler pipes opposite from the initial flush procedures to perform a backflush.
16. Repeat steps 11 and 12.
17. Release the trigger and allow water only to rinse the oil cooler for one minute.
18. Switch the water valve on the tool to the off position and turn the water supply off at the faucet.

NOTICE: Excessive residual moisture can cause corrosion in the oil cooler or cooler pipes and can damage the transmission. If steps 20 through 23 cannot be completed at this time, rinse the oil cooler and cooler pipes with transmission fluid. Complete steps 20 through 23 after reinstallation of transmission.

19. Attach air supply to the air valve located on plumbing of tool and dry the system out with air for at least two minutes, or longer if moisture is visible exiting from the oil cooler line discharge hose. Use an air chuck clip, if available, to secure the air chuck onto the air valve for ease of operation.
20. Connect the cooler feed pipe to the transmission bottom connector.
21. If not already connected, attach the discharge hose to the cooler return pipe (top connector) and place into an appropriate drain container.
22. After filling the transmission with automatic transmission fluid, start the engine and run for 30 seconds. This will remove any residual moisture from the oil cooler and cooler pipes, protect all components from corrosion and check flow rate through the cooler. A minimum of two (2) quarts must be obtained during this 30 second run. If fluid flow is insufficient, check the fluid flow out of the transmission by disconnecting the oil cooler feed line at the radiator and restarting the engine. Do the following according to flow rate:

    Insufficient Feed Flow: Inspect the transmission for cause.

    Sufficient Feed Flow: Inspect oil cooler pipes and fittings for restrictions or leaks and repeat the oil cooler flushing procedure. Repeat the check of fluid flow out of the return line and if flow is still inhibited, replace the oil cooler.
23. Remove discharge hose, reconnect cooler return pipe to transmission and refill unit to proper fluid level.

Tool Cleaning — Every Third Use

24. Disconnect the water supply hose from the tool.
25. Bleed air pressure from the can, remove fill cap, return any unused solution to container, and rinse the can out with water. Do not store tool with solution in tank.
26. Loosen large coupling nut and remove plumbing from tank.

27. Remove screen from plumbing and wash with water.
28. Use the cleaning pin to remove any material in the solution orifice. Orifice is located in plumbing below screen.
29. Reconnect the plumbing and fill can half with water, secure the fill cap, and pressurize the can to 550-700 kPa (80-100 psi).
30. Aim tool into the five gallon pail or floor drain and depress the trigger to allow water from the can to flow through the solution orifice for 30 seconds to ensure proper cleaning.
31. Bleed air pressure from can, remove the fill cap, and empty the can.
32. Reconnect fill cap flushing tool.

SPECIFICATIONS

FASTENER TORQUE

	N·m	Ft. Lbs.
Shift Linkage	25	19
TV Cable	10	7
Cooler Lines to Transmission	22	16
Cooler Lines to Radiator	27	20
Transmission Support Braces	95	70
Dampener Support	41	30
Dampener to Support	87	65
Converter Housing Cover	10	7
— V Models	35	25
— P Models	10	7
Transmission to Engine	47	34.5
Converter to Flywheel	65	50
Crossmember to Frame		
— R, and P Models	85	63
— V Models	70	52
NOTE:		
LBI Engine - 4.3L (262 CID V6)		
Accumulator Cover to Case (M6-1.0 x 35.0)	11	8
Detent Spring to Valve Body	22	18
Valve Body to Case	11	8
Oil Passage Cover to Case	11	8
Solenoid Assembly to Pump Cover	11	8
Transmission Oil Pan to Case	11	8
Pressure Switches	11	8
Auxiliary Valve Body to Case	11	8
Case Extension to Case	34	26
Manual Shaft to Inside Detent Lever	31	23
Pressure Plugs (1/8-27)	11	8
Pressure Plugs (1/4-18)	24	18
Connector Cooler Pipe	38	28

TB-3071-2A

LUBRICATION

Capacity		
— Pan Removal	4.7 l.	10 pts.
— Overhaul	10.9 l.	23 pts.
Type Recommended DEXRON® II		

TB-3066-2A

SPECIAL TOOLS

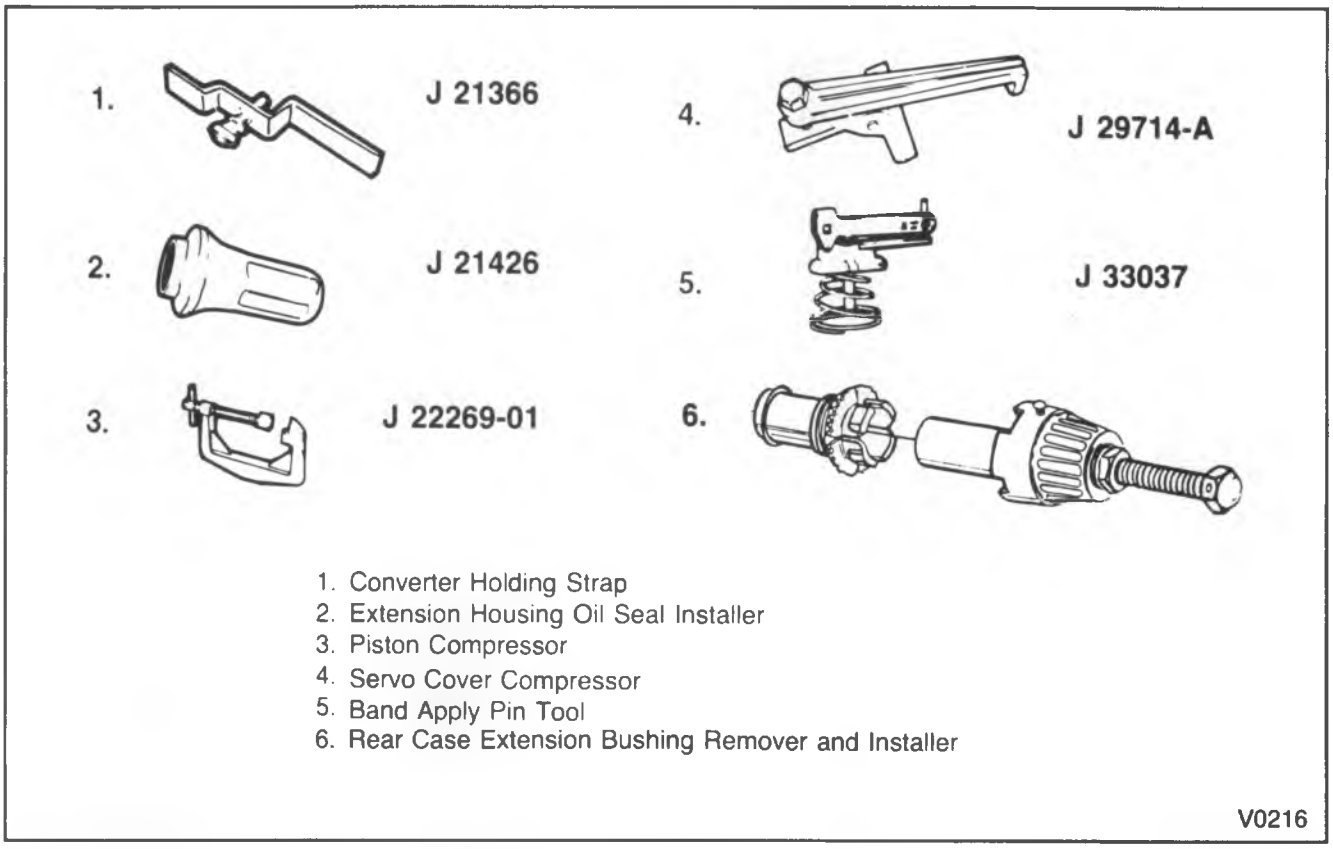

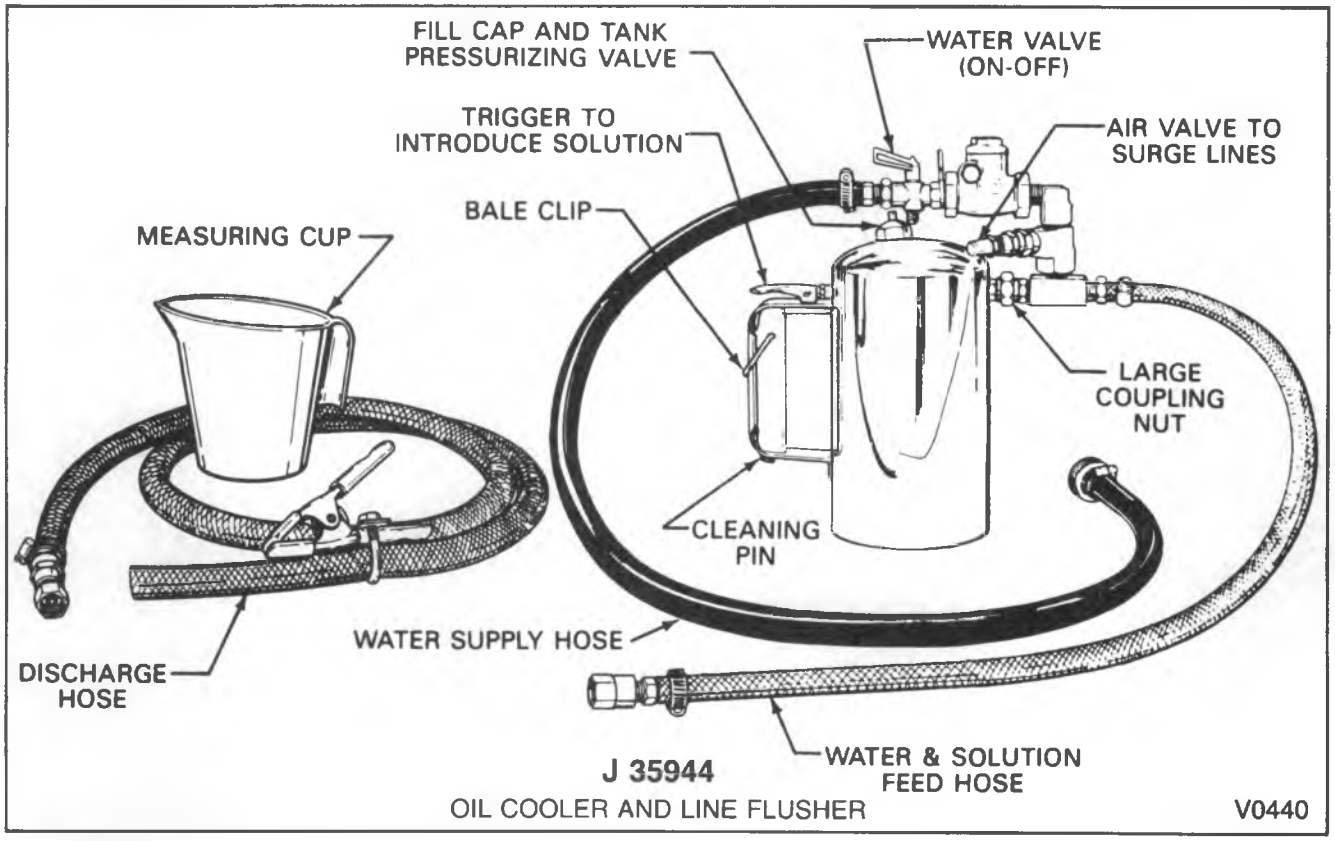

SECTION 7A2

4L80E AUTOMATIC TRANSMISSION

CONTENTS

SUBJECT	PAGE
General Description	7A2- 2
Diagnosis Information	7A2- 2
Electrical/Garage Shift Test	7A2- 2
Hoist Test Procedure	7A2- 3
Shift Speed Chart	7A2- 5
Road Test Procedure	7A2- 6
Line Pressure Check Procedure	7A2- 7
Torque Converter Clutch Diagnosis	7A2- 7
Torque Converter Evaluation	7A2- 7
TCC Shudder Diagnosis	7A2- 9
Charts and Diagrams	7A2-11
Clutch Application Chart	7A2-11
Diagnosis Charts (3 column)	7A2-12
Malfunction Code Diagnosis Charts	7A2-32
Malfunction Code Actions	7A2-34
Electronic Component Malfunctions	7A2-35
Wiring Diagram	7A2-36
Fluid Flow and Circuit Descriptions	7A2-38
Fluid Passages	7A2-60
Electrical Diagnosis Tools	7A2-67
On-Vehicle Service	7A2-68
Parts Cleaning, Inspection and Replacement	7A2-68
Transmission Fluid Checking Procedure	7A2-68
Shift Linkage	7A2-68
Shift Linkage Adjustment	7A2-69
Downshift Relay Replacement	7A2-71
Changing Fluid and Filter	7A2-71
Vehicle Speed Sensors	7A2-72
Rear Extension Oil Seal	7A2-72
Transmission Replacement	7A2-73
Control Valve Assembly	7A2-74
Front Servo Replacement	7A2-76
Rear Servo Replacement	7A2-77
Accumulator Housing Assembly	7A2-79
Parking Lock Pawl and Actuator	7A2-79
Filler Tube Replacement	7A2-80
Transmission Cooler Flushing	7A2-80
Specifications	7A2-83
Fastener Torque Specifications	7A2-83
Lubrication	7A2-84
Special Tools	7A2-84

GENERAL DESCRIPTION

The HYDRA-MATIC 4L80-E is a fully automatic rear wheel drive electronically controlled transmission. It provides four forward ranges including overdrive.

The major components of this unit are:

- Torque converter with converter clutch and dual stators
- Front and rear band assemblies
- Forward, Intermediate, Direct, Fourth and Overdrive multiple disc clutches
- Three planetary gear sets
- Overdrive and Lo roller clutches
- Intermediate sprag clutch
- Control valve assembly with two electronic shift solenoids
- Input and output speed sensors
- Bolt on case extension

Oil pressure is supplied by a gear type oil pump. Oil pressure is regulated by a force motor solenoid, and shift points are controlled by shift solenoids via PCM operation. The torque converter clutch apply and release is controlled by a pulse width modulated solenoid.

DIAGNOSIS INFORMATION

ELECTRICAL/GARAGE SHIFT TEST

This preliminary test should be performed before a hoist or road test to make sure electronic control inputs are connected and operating. If the inputs are not checked before operating the transmission, a simple electrical condition could be misdiagnosed as a major transmission condition.

A scan tool provides valuable information and must be used on the HYDRA-MATIC 4L80-E transmission for accurate diagnosis.

1. Move gear selector to "Park" (P) and set the parking brake.
2. Connect scan tool to ALDL terminal.
3. Start engine.
4. Connect power to scan tool.
5. Verify that the following signals are present:
   - INPUT SPEED
   - OUTPUT SPEED
   - VEHICLE SPEED
   - PRNDL SELECT
   - CURRENT GEAR
   - DESIRED FORCE MOTOR
   - ACTUAL FORCE MOTOR
   - COOLANT TEMPERATURE
   - TRANSMISSION TEMPERATURE
   - THROTTLE ANGLE
   - TCC DUTY CYCLE
   - SYSTEM VOLTAGE
   - BRAKE SWITCH
6. Monitor the BRAKE SWITCH signal while tapping the brake pedal with your foot.
   - The BRAKE SWITCH should be on when the brake pedal is depressed, and come off when the brake pedal is released.
7. Monitor the PRNDL SELECT signal and move the gear selector through all the ranges.
   - Verify that the PRNDL SELECT value matches the gear range indicated on the instrument panel or console.
   - Gear selections should be immediate and not harsh.

8. Move gear selector to neutral and monitor the THROTTLE ANGLE signal while increasing and decreasing engine RPM with the accelerator pedal.
   - THROTTLE ANGLE should increase with engine RPM.

HOIST TEST PROCEDURE

Since the HYDRA-MATIC 4L80-E is electronically controlled, road load is not needed to automatically shift the transmission. A hoist test can often be used in place of a road test if the problem is suspected to be in the electrical system.

A hoist test can be used to:

- Verify shift points
- Test TCC operation
- Test solenoid operation
- Test gear ratios
- Test input and output speed sensors

The hoist test allows a line pressure check to be performed while the test equipment remains outside of the vehicle. The technician can direct more attention towards testing since the vehicle is not being driven on the road.

Upshifts and Torque Converter Clutch (TCC) Apply

The vehicle computer calculates upshift points based on two inputs: percent THROTTLE ANGLE and VEHICLE SPEED. When the computer says a shift should occur, an electrical signal is sent to the shift solenoids which in turn move the valves to perform the upshift.

The shift speed charts have been updated to reference THROTTLE ANGLE instead of "min throttle" or "wot" to make shift speed measurement more uniform and accurate. A scan tool is necessary to monitor THROTTLE ANGLE.

Some scan tools have been programmed to measure and record shift point information. Check the instruction manual to see if this test is available.

With gear selector in D4:

1. Look at the shift speed chart contained in this section and choose a percent throttle angle of 15 or 20.
2. Set up the scan tool to monitor THROTTLE ANGLE and VEHICLE SPEED.
3. Accelerate to the chosen throttle angle and hold the throttle steady.
4. As the transmission upshifts, note the shift speed for:
   - 2nd gear
   - 3rd gear
   - 4th gear

Important

- Shift speeds may vary due to slight hydraulic delays responding to electronic controls. A change from the original equipment tire size also affects shift speeds.

  Note when TCC applies. This should occur in third or fourth gear. If the apply is not noticed by an RPM drop, refer to the "Preliminary Torque Converter Clutch Diagnosis" information contained in this section.

Important

- The TCC will not apply unless the **engine** coolant has reached a minimum operating temperature.

5. Repeat steps 1-4 using several different throttle angles.

Part Throttle Detent Downshift

At vehicle speeds of 40-55 mph (64-88 km/h) in fourth gear, quickly increase throttle angle.

Verify that:

- TCC releases
- Transmission downshifts to 3rd gear immediately
- Solenoid A turns off

Full Throttle Detent Downshift

At vehicle speed of 40-55 mph (64-88 km/h) in fourth gear, quickly increase throttle angle to its maximum position.

Verify that:

- TCC releases
- Transmission downshifts to 2nd gear immediately
- Solenoids A and B turn off

Manual Downshifts

The shift solenoids do not control the initial downshift during manual downshifts. All manual downshifts are hydraulic. The solenoid states will change during, or slightly after a manual downshift is selected.

1. At vehicle speeds of 40-55 mph (64-88 km/h) in fourth gear, release the accelerator pedal while moving the gear selector to D3. Observe that:
   - TCC releases
   - Transmission downshifts to 3rd gear immediately
   - Engine slows vehicle down
2. Move gear selector back to D4 and accelerate to 40-45 mph (64-72 km/h). Release the accelerator while moving the gear selector to D2 and observe that:
   - TCC releases
   - Transmission downshifts to 2nd gear immediately
   - Engine slows vehicle down

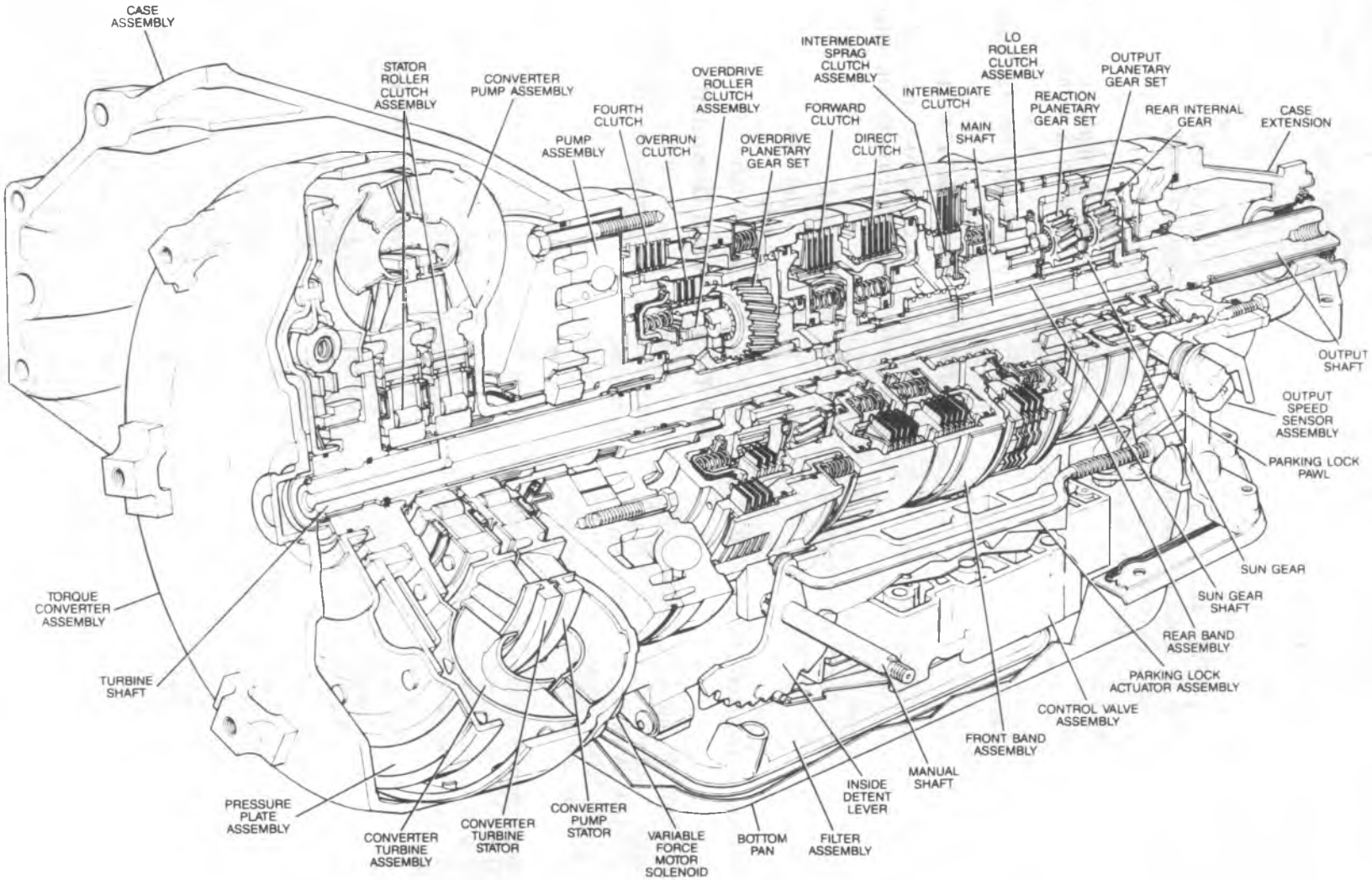

Figure 1 HYDRA-MATIC 4L80-E Transmission

1991 HYDRA-MATIC 4L80-E SHIFT SPEED CHART

			1-2 SHIFT +/– 150 RPM					2-3 SHIFT +/– 200 RPM					3-4 SHIFT +/– 250 RPM					4-3 ±100 RPM	3-2 ±100 RPM	2-1 ±100 RPM
MODEL	BODY	TPS	10	20	30	40	50	10	20	30	40	50	10	20	30	40	50	0 - 10	0 - 10	0 - 10
ABP	P	TRANS RPM	536	682	779	974	1120	974	1218	1461	1705	1948	1705	1754	1948	2094	2289	1461	730	341
ACP, ADP	C, K	TRANS RPM	536	682	779	974	1120	974	1218	1364	1753	1948	1705	1754	1899	2240	2630	1461	730	341
BAP, BBP, BJP, BNP	C, K	TRANS RPM	512	698	837	930	1023	930	1302	1535	1674	1814	1442	1721	1953	2139	2511	1302	744	350
BAP, BBP, BJP	R, V, G, P	TRANS RPM	465	558	651	791	884	884	1070	1302	1442	1628	1442	1674	1907	2139	2372	1302	744	419
CAP, CBP, CKP	C, K, R, V, G, P	TRANS RPM	438	438	536	682	828	828	828	974	1218	1510	1266	1266	1412	1802	2192	1120	755	341
DBP, DCP, DDP, DFP, DKP, DLP, DRP	C, K, R, V, G, P	TRANS RPM	466	652	885	979	1072	979	1351	1584	1771	1957	1584	1911	2237	2470	2749	1305	652	419
DNP, DPP	P	TRANS RPM	559	699	885	979	1072	1025	1398	1584	1771	1911	1584	1957	2190	2470	2656	1305	652	419

NOTES:

1. ALL SPEEDS GIVEN ARE IN TRANSMISSION OUTPUT SHAFT RPM.
2. SPEEDS ARE BASED ON PERCENT THROTTLE POSITION SENSOR (TPS) DATA.
3. USE A TECH 1™ OR OTHER SCAN TOOL TO MONITOR THIS DATA.

MH0223-4L80-E

Figure 2 Shift Speed Chart

3. Move gear selector back to D4 and accelerate to 30 mph (48 km/h). Release the accelerator pedal while moving the gear selector to D1 and observe that:
   - TCC releases
   - Transmission downshifts to 1st gear immediately
   - Engine slows vehicle down

Coasting Downshifts

1. With the gear selector in D4, accelerate to 4th gear with TCC applied.
2. Release the accelerator pedal and lightly apply the brakes. Observe that:
   - TCC releases
   - Downshifts occur at speeds shown on the shift speed chart

Manual Gear Range Selection

Upshifts in the manual gear ranges are controlled by the shift solenoids.

Perform the following tests by accelerating at 10-15 percent TPS.

Manual Third (D3)

- With vehicle stopped, move the gear selector to D3 and accelerate to observe:
  - 1-2 shift
  - 2-3 shift
  - TCC does not apply

Manual Second (D2)

1. With vehicle stopped, move gear selector to D2 and accelerate to observe:
   - 1-2 shift
2. Accelerate to 35 mph (40 km/h) and observe:
   - 2-3 shift does **not** occur
   - TCC does **not** apply

Manual First (D1)

- With vehicle stopped, move gear selector to D1. Accelerate to 20 mph (32 km/h) and observe:
  - No upshifts occur
  - TCC does **not** engage

Reverse (R)

- With vehicle stopped, move gear selector to R and slowly accelerate to observe:
  - Solenoid A is on

Use a scan tool to see if any transmission malfunction codes have been set. Refer to "Malfunction Code Diagnosis" in this section and repair the vehicle as directed. After repairing the vehicle, perform the hoist test and verify that the code has not set again.

If the transmission is not performing well and no trouble codes have been set, there may be an intermittent condition. Check all electrical connections for damage or a loose fit. Some scan tools have a snapshot test which can help catch an intermittent condition that doesn't occur long enough to set a code.

You may want to read "Electronic Component Diagnosis" in this section to become familiar with transmission conditions caused by transmission electrical malfunctions.

If no trouble codes have been set and the condition is suspected to be hydraulic, take the vehicle on a road test.

ROAD TEST PROCEDURE

- Perform the road test using a scan tool
- Compare the results of this test with results from the hoist test
- This test should only be performed when traffic and road conditions permit
- Observe all traffic safety regulations

1. Start engine.
2. Depress brake pedal.
3. Move gear selector from:
   - Park to Reverse
   - Reverse to Neutral
   - Neutral to D4

Important

- Gear selections should be immediate and not harsh.

4. Perform the same test procedure as instructed previously in the hoist test:
   - Upshifts and TCC Apply
   - Part Throttle Detent Downshift
   - Full Throttle Detent Downshift
   - Manual Downshifts
   - Coasting Downshifts
   - Manual Gear Range Selection

Use a scan tool to see if any transmission malfunction codes have been set. Refer to the "Malfunction Code Diagnosis" in this section and repair the vehicle as directed. After repairing the vehicle, perform the road test and verify that no codes have been set again.

If no codes have been set and the condition remains, refer to the "Diagnosis Charts" contained in this section.

If the condition is suspected to originate in the torque converter, refer to "Torque Converter Clutch (TCC) Diagnosis" later in this section.

LINE PRESSURE CHECK PROCEDURE

This test can be performed during the hoist or road test. It is easier to check pressures during the hoist test because the tubing and pressure gage can remain outside of the vehicle, and won't be damaged by road conditions or debris. The technician can diagnose more quickly on the hoist since the driver doesn't have to watch the road.

The HYDRA-MATIC 4L80-E uses a gear type oil pump to produce hydraulic pressure, and a force motor solenoid to control that pressure after it leaves the pump. The force motor solenoid is controlled by an electrical signal that ranges from 0-1 amp. One amp corresponds to a minimum line pressure (not 0 psi) and zero amps corresponds to a maximum line pressure.

For reverse, a reverse boost valve increases the line pressure.

TORQUE CONVERTER CLUTCH (TCC) DIAGNOSIS

The Torque Converter Clutch is applied by fluid pressure which is controlled by a pulse width modulated (PWM) solenoid located inside the Automatic Transmission assembly. The solenoid is energized by completing an electrical circuit through a combination of switches and sensors.

Functional Check Procedure

Inspect

1. Install a tachometer or scan tool.
2. Drive the vehicle until proper transmission operating temperature is reached.
3. Drive the vehicle at 50-55 mph (80-88 km/h) with light throttle.
4. Maintaining throttle, lightly touch the brake pedal and check for release of the TCC and a slight increase in engine RPM.
5. Release the brake, slowly accelerate and check for a re-apply of the TCC and a slight decrease in engine RPM.

   To properly diagnose the Torque Converter Clutch (TCC) system, perform all electrical testing first and then test the hydraulic system.

- For diagnosis of electrical or emission control related components of the TCC, refer to the specific vehicle section in Section 6, Driveability and Emissions.
- Additional TCC diagnosis information is available in the "Wiring Diagram, Diagnosis Charts, Malfunction Code Diagnosis, and Malfunction Code Actions" contained in this section.
- For diagnosis of TCC hydraulic controls, refer to the "Fluid Flow and Circuit Descriptions" provided in this section.

NOTICE: Use only high impedance type ohmmeters for electrical testing on the TCC circuit. If another type of ohmmeter is used, damage to the TCC solenoid may occur.

NOTICE: Do not bench test the TCC solenoid using an automotive type battery. Accidentally crossed wires will damage the internal diode of the solenoid.

TORQUE CONVERTER EVALUATION

The torque converter should be replaced under any of the following conditions.

- External leaks in the hub weld area
- Converter hub is scored or damaged.
- Converter pilot is broken, damaged or fits poorly into crankshaft.
- Steel particles are found after flushing the cooler and cooler lines.
- Pump is damaged or steel particles are found in the converter.
- Vehicle has TCC shudder and/or no TCC apply. Replace only after all hydraulic and electrical diagnosis has been made. (Converter clutch material may be glazed.) See "TCC Shudder Diagnosis" later in this section.
- Converter has an imbalance which cannot be corrected. (Refer to Converter Vibration Test Procedure in the Transmission Unit Repair Section.)
- Converter is contaminated with engine coolant containing antifreeze.
- Internal failure of stator roller clutch
- Excess end play
- Heavy clutch debris due to overheating (blue converter)
- Steel particles or clutch lining material found in fluid filter or on magnet when no internal parts in unit are worn or damaged — indicates that lining material came from converter.

Noise

Torque converter whine is usually noticed when the vehicle is stopped and the transmission is in "Drive" or "Reverse." The noise will increase when engine RPM is increased. The noise will stop when the vehicle is moving or when the torque converter clutch is applied because both halves of the converter are turning at the same speed.

Perform a stall test to make sure the noise is actually coming from the converter.

1. Place foot on brake.
2. Put gear selector in "Drive."
3. Depress accelerator to approximately 1200 RPM for no more than six seconds.

NOTICE: If the accelerator is depressed for more than six seconds, damage to the transmission may occur.

A torque converter noise will increase under this load.

Important

- This noise should not be confused with pump whine noise which is usually noticeable in "Park," "Neutral" and all other gear ranges. Pump whine will vary with pressure ranges.

1991 HYDRA-MATIC 4L80-E LINE PRESSURE CHECK PROCEDURE

Line pressures are calibrated for two sets of gear ranges — Drive-Park-Neutral, and Reverse. This allows the transmission line pressure to be appropriate for different pressure needs in different gear ranges:

Gear Range	Line Pressure Range
Drive, Park or Neutral	35 - 171 PSI
Reverse	67 - 324 PSI

Before performing a line pressure check, verify that the force motor is receiving the correct electrical signal from the vehicle computer:

1. Install a scan tool.
2. Start the engine and set parking brake.
3. Check for a stored force motor malfunction code, and other malfunction codes.
4. Repair vehicle if necessary.

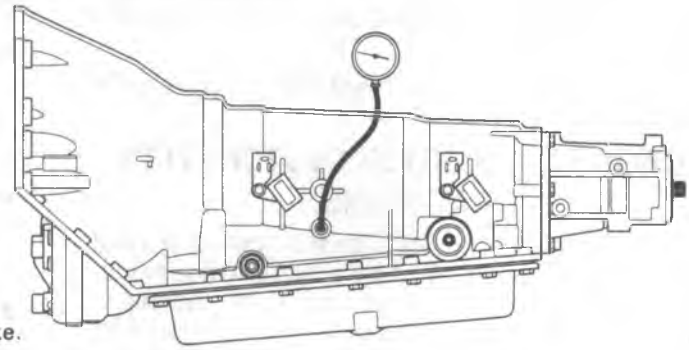

Inspect

- Fluid level (see Section 7A)
- Manual linkage

Install or Connect

- TECH 1 Scan tool
- Oil pressure gage at line pressure tap

5. Put gear selector in Park and set the parking brake.
6. Start engine and allow it to warm up at idle.
7. Access the "override force motor" test on the TECH 1 scan tool.
8. Increase FORCE MOTOR CURRENT in 0.1 Amp increments and read the corresponding line pressure on the pressure gage. (Allow pressure to stabilize for 5 seconds after each current change.)
9. Compare data to the Drive-Park-Neutral line pressure chart below.

   Line pressure will pulse either high or low every ten seconds to keep the force motor plunger free. This is normal and will not harm the transmission.

***NOTICE** Total test running time should not exceed 2 minutes, or transmission damage could occur.

CAUTION Brakes must be applied at all times to prevent unexpected vehicle motion.

If pressure readings differ greatly from the line pressure chart, refer to the Diagnosis Charts contained in this section.

The TECH 1 scan tool is only able to control the force motor in Park and Neutral with the vehicle stopped at idle. This protects the clutches from extremely high or low pressures in Drive or Reverse ranges.

Force Motor Current (Amp)	Line Pressure (PSI)
0.02	157 - 177
0.10	151 - 176
0.20	140 - 172
0.30	137 - 162
0.40	121 - 147
0.50	102 - 131
0.60	88 - 113
0.70	63 - 93
0.80	43 - 73
0.90	37 - 61
0.98	35 - 55

MH0224-4L80-E

Figure 3 Line Pressure Check Procedure

Torque Converter Stator

The torque converter stator roller clutch can malfunction in two different ways. It can either remain locked up at all times or freewheel in both directions.

If the stator is freewheeling at all times, the vehicle tends to have poor acceleration from the standstill. The car may act normal at speeds above 30-35 mph (50-55 km/h). If poor acceleration is noted, it should first be determined that the exhaust system is not blocked, the engine timing is correct, and the transmission is in first gear when starting out.

If the engine accelerated freely to high RPM in "Neutral" (N), it can be assumed that the engine and exhaust system are normal. Checking for poor performance in "Drive" (D) and "Reverse" (R) will help determine if the stator is freewheeling at all times.

If the stator is locked up at all times, performance from a standstill appears normal. Engine RPM and acceleration is restricted or limited, however, at high speeds. The engine may overheat with this condition. Visual examination of the converter may reveal a blue color from overheating.

If the torque converter has been removed from the vehicle, the stator roller clutch can be checked by inserting a finger into the splined inner race of the roller clutch and trying to turn the race in both directions. The inner race should turn freely clockwise, but not turn or be very difficult to turn counterclockwise.

The Torque Converter Should Not Be Replaced If:

- The oil has an odor, is discolored, and there is no evidence of metal or clutch facing particles.
- The threads in one or more of the converter bolt holes are damaged.
  - Correct with thread insert. (Refer to Section 6A).
- Transmission failure did not display evidence of damage or worn internal parts, steel particles or clutch plate lining material in unit and inside the fluid filter.
- Vehicle has been exposed to high mileage (only). The exception may be where the torque converter clutch dampener plate lining has seen excess wear by vehicles operated in heavy and/or constant traffic, such as taxi, delivery or police use.

TCC SHUDDER DIAGNOSIS

The key to diagnosing TCC shudder is to note when it happens and under what conditions.

TCC shudder should only occur during the APPLY and/or RELEASE of the converter clutch — NEVER after the TCC plate is fully applied.

While TCC is Applying or Releasing

If the shudder occurs while the TCC is applying, the problem is within the transmission or torque converter. Something is not allowing the clutch to become fully engaged, not allowing clutch to release, or is trying to release and apply the clutch at the same time. This could be caused by leaking turbine shaft seals, a restricted release orifice, a distorted clutch, a damaged torque converter housing surface due to long converter bolts, or defective friction material.

After TCC Has Applied

If shudder occurs after the TCC has applied (often with engine under load such as climbing a hill), most of the time there is nothing wrong with the transmission! As mentioned above, once the TCC has been applied, it is very unlikely that it will slip. Engine problems that may go unnoticed under light throttle and load become noticeable when going up a hill, or when accelerating, due to the mechanical lock-up between engine and transmission.

REMEMBER: Once TCC is applied, there is no torque converter (fluid coupling) assistance. Engine or driveline vibrations could be unnoticeable before TCC engagement.

The following components should be inspected to avoid misdiagnosis of TCC Shudder and possibly disassembling a transmission and/or replacing a converter unnecessarily.

- Spark plugs – Inspect for cracks, high resistance or broken insulator.
- Plug wires – Look in each end. If there is red dust (ozone) or black substance (carbon) present, then the wires are bad. Also look for a white discoloration of the wire indicating arcing during hard acceleration.
- Distributor cap and rotor – Look for broken or uncrimped parts.
- Coil – Look for black on bottom indicating arcing while engine is misfiring.
- Fuel injector – Filter may be plugged.
- Vacuum leak – Engine won't get correct amount of fuel. May run rich or lean depending on where the leak is.
- EGR valve – Valve may let in too much unburnable exhaust gas and cause engine to run lean.
- MAP/MAF sensor – Like vacuum leak, engine won't get correct amount of fuel for proper engine operation.
- Carbon on intake valve – Restricts proper flow of air/fuel mixture into cylinders.
- Flat cam – Valves don't open enough to let proper fuel/air mixture into cylinders.
- Oxygen sensor – May command engine too rich or too lean for too long.
- Fuel pressure – May be too low.
- Engine Mounts – Vibration of mounts can be multiplied by TCC engagement.
- Axle joints – Check for vibration.
- TPS – TCC apply and release depends on TPS in many engines. If TPS is out of specification, TCC may remain applied during initial engine crowd.
- Cylinder balance – Bad piston rings or poorly sealed valves can cause low power in a cylinder.
- Fuel contamination – Causes poor engine performance.

HYDRA-MATIC 4L80-E GEAR RATIOS

FIRST	2.48	FOURTH	.75
SECOND	1.48	REVERSE	2.08
THIRD	1.00		

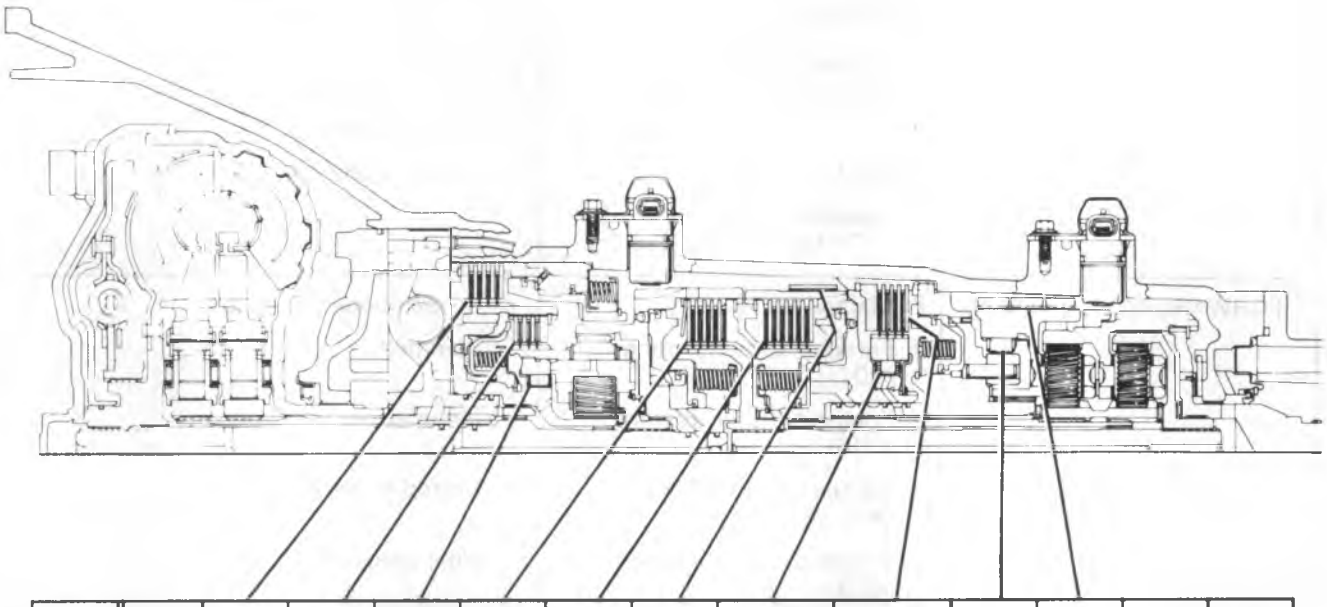

RANGE	GEAR	FOURTH CLUTCH	OVERRUN CLUTCH	OVERDRIVE ROLLER CLUTCH	FORWARD CLUTCH	DIRECT CLUTCH	FRONT BAND	INTERMEDIATE SPRAG CLUTCH	INTERMEDIATE CLUTCH	LO ROLLER CLUTCH	REAR BAND	SOLENOID A	SOLENOID B
P-N											APPLIED	ON	OFF
D4	1st			HOLDING	APPLIED			*		HOLDING		ON	OFF
	2nd			HOLDING	APPLIED			HOLDING	APPLIED			OFF	OFF
	3rd			HOLDING	APPLIED	APPLIED			APPLIED			OFF	ON
	4th	APPLIED			APPLIED	APPLIED			APPLIED			ON	ON
D3	1st		APPLIED	HOLDING	APPLIED			*		HOLDING		@ ON	@OFF
	2nd		APPLIED	HOLDING	APPLIED			HOLDING	APPLIED			@OFF	@OFF
	3rd		APPLIED	HOLDING	APPLIED	APPLIED			APPLIED			@OFF	@ ON
D2	1st		APPLIED	HOLDING	APPLIED			*		HOLDING		@ ON	@OFF
	2nd		APPLIED	HOLDING	APPLIED		APPLIED	HOLDING	APPLIED			@OFF	@OFF
D1	1st		APPLIED	HOLDING	APPLIED			*		HOLDING	APPLIED	@ ON	@OFF
	2nd		APPLIED	HOLDING	APPLIED		APPLIED	HOLDING	APPLIED			@OFF	@OFF
R	REVERSE			HOLDING		APPLIED				*	APPLIED	ON	OFF

*HOLDING BUT NOT EFFECTIVE

ON = SOLENOID ENERGIZED

OFF = SOLENOID DE-ENERGIZED

@ THE SOLENOID'S STATE FOLLOWS A SHIFT PATTERN WHICH DEPENDS UPON VEHICLE SPEED AND THROTTLE POSITION. IT DOES NOT DEPEND UPON THE SELECTED GEAR.

MH0225-4L80-E

Figure 4 Clutch Application Chart

CONDITION	INSPECT COMPONENT	FOR CAUSE
HIGH LINE PRESSURE	• Pressure Regulator Valve (231)	— Stuck at high torque signal due to undersized bore or sediment.
	• Reverse Boost Valve (228)	— Stuck at high torque signal due to undersized bore or sediment.
	• Retainer Pin (211)	— Broken.
	• Orificed Plug (210)	— Blocked.
	• Force Motor (320)	— Failed "off". — Loose connector.
	• PCM	— Loose connector.
	• Possible Codes — 73 Force Motor Current	
FORWARD MOTION IN N	• Manual Valve (319)	— Mispositioned or stuck.
	• Forward Clutch Springs (607)	— Jammed.
	• Forward Clutch Piston (606)	— Jammed.
	• Forward Clutch Plates (610, 611)	— Seized or jammed.
	• Forward Clutch Housing (602)	— Hole plugged.
	• Hub (613)	— Holes plugged.
INADEQUATE LUBE AT LOW LINE OR HEAVY VEHICLE LOADS	• Converter Limit Valve (214)	— Stuck closed by sediment or valve bore collapse.
	• Retainer Pin (211)	— Broken.
INADEQUATE LUBE	• Pressure Regulator Valve (231)	— Stuck in high demand position.
	• Pump Body (206)	— Cross channel leakage.
	• Gasket (6)	— Damaged.
	• Oil Transfer Hole Cup Plug	— Leaking.
ENGINE STALL	• TCC System	— TCC stuck on or dragging.
LOSS OF POWER	• Transmission	— Low oil. — Not starting in first gear.
	• TCC System	— TCC stuck on or dragging.
	• Torque Converter (1)	— Debris.
	• Stator Shaft (235)	— Broken.
	• Turbine Shaft (502)	— Bushing worn.
	• Main Shaft (662)	— Bushing worn.
	• Output Shaft (671)	— Bushing worn.
	• Bearing (668)	— Worn.

ALL ILLUSTRATION NUMBERS REFERENCE HYDRA-MATIC 4L80-E UNIT REPAIR SECTION

MH0226-4L80-E

Figure 5 Diagnosis Chart A

CONDITION	INSPECT COMPONENT	FOR CAUSE
NO TORQUE IN REVERSE AND THIRD	• Forward Clutch Hub (613)	— Broken.
	• Snap Ring (616a)	— Not seated.
	• Forward Clutch Housing (602)	— Broken.
TRANS OVERHEATS	• TCC Circuit	— Blockage in apply or release.
	• TCC Valve Spring (224)	— Broken.
	• Pump Cover (206)	— Cross channel leakage.
	• Pressure Regulator Valve (231)	— Stuck in high demand position.
	• Oil Cooler	— Blocked cooler or cooler lines.
	• Gasket (6)	— Damaged.
	• Retainer Pin (211)	— Broken.
	• Turbine Shaft O-ring (2)	— Damaged.
	• Turbine Shaft Seals (503)	— Damaged.
	• Stator Shaft Bushing (233)	— Worn or damaged.
	• Oil Transfer Hole Cup Plug	— Leaking.
	• Fluid	— Low fluid level.
	• Radiator	— Restricted air flow.
@ WOT	• Converter Limit Valve Bypass Orificed Cup Plug	— Blocked, therefore converter limit valve stuck closed.
LOW LINE PRESSURE	• Pump (203)	— Cross channel air leak at body to cover, or body to case gasket.
	• Pressure Regulator Valve (231)	— Stuck at low torque signal due to undersized bore or sediment.
	• Reverse Boost Valve (228)	— Stuck at low torque signal due to undersized bore or sediment.
	• Pump Valve Bores	— Excessive valve clearance due to wear.
	• Spring (230)	— Broken.
	• Retainer Pin (211)	— Broken.
	• Valve Body (301)	— Cross channel leaks. — Cross valve land leaks.
	• Gaskets/Spacer Plate	— Damaged or missing.
	• Force Motor (320)	— Stuck "on". — Broken clip causing leakage. — Pinched wire to ground. — Screen missing.
	• PCM	— Failed.
	• Possible Codes — 73 Force Motor Current	

ALL ILLUSTRATION NUMBERS REFERENCE HYDRA-MATIC 4L80-E UNIT REPAIR SECTION

MH0227-4L80-E

Figure 6 Diagnosis Chart B

CONDITION	INSPECT COMPONENT	FOR CAUSE
ENGINE STARTS IN GEAR	• Manual Valve (319)	— Not engaged to detent lever. — Stuck in wrong position.
	• Neutral Safety Switch	— Not working.
SHIFT LEVER INDICATES WRONG GEAR	• Manual Valve (319)	— Not engaged to detent lever.
	• Detent Pin (711)	— Misaligned or broken.
	• Manual Shaft (708)	— Flats not parallel.
	• Indicator Linkage	— Misadjusted.
NO GEAR SELECTIONS	• Detent Lever (711)	— Nut loose or missing.
	• Manual Valve (319)	— Stuck.
	• Spacer Plate (46)	— Blocked holes.
	• Valve Body/Case (301, 7)	— Blocked channels.
LOSS OF DRIVE	• Torque Converter (1)	— Broken lug, failed lug welds. — Sheared lug bolts. — Worn turbine shaft splines. — Low oil. — Pump hub cracked, scored or broken. — Internal failure. — Closure weld failure. — Cover cracked at lug weld.
	• Pump (203)	— Seized. — Broken pump gears.
	• Case Extension Seal (20)	— Missing, damaged or displaced.
	• Orifice Plate	— Missing or leaking around edge.
	• Gasket (6)	— Damaged.
	• Oil Transfer Hole Cup Plug	— Leaking or missing.
	• Seals (503)	— Damaged or missing.
	• Housing (504)	— Broken.
	• Roller Clutch (512)	— Worn, broken or locked.
	• Carrier (514)	— Broken.
	• Pinions (518)	— Broken free from pilot. — Spalled pins or pinions. — Plugged pinion pin holes. — Worn thrust washers. — Lack of lube.
	• Bearing (513)	— Broken.
	• Roller Clutch (644)	— Worn, broken or locked. — No lube.
	• Turbine Shaft (502)	— Shaft or splines broken.

ALL ILLUSTRATION NUMBERS REFERENCE HYDRA-MATIC 4L80-E UNIT REPAIR SECTION

MH0228-4L80-E

Figure 7 Diagnosis Chart C

CONDITION	INSPECT COMPONENT	FOR CAUSE
LOSS OF DRIVE (Continued)	(Forward Clutch Components)	
	• Seals (603, 604, 605)	— Nicked or cut.
	• Checkball	— Leaking.
	• Piston (606)	— Cracked or jammed.
	• Housing (602)	— Cracked.
	• Friction Plates (611)	— Burned or splines worn.
	• Reaction Plates (610)	— Worn or splines worn.
	• Spring Assembly (607)	— Jammed.
	• Driving Hub (615)	— Broken.
	• Snap Ring (616)	— Not seated.
	• Driven Hub (613)	— Gear teeth worn.
	(Rear Gearset)	
	• Pinions (655)	— Broken or spalled.
	• Pinion Pins (656)	— Broken or spalled.
	• Needle Bearings (654)	— Broken or spalled.
	• Sun Gear (649)	— Broken or spalled.
	• Pinion Thrust Washers (652)	— Worn.
	• Rear Internal Gear (666)	— Broken or spalled.
	• Front Internal Gear (661)	— Broken or spalled.
	• Turbine Shaft Ball Seal	— Ineffective.
	• Main Shaft (662)	— Shaft or splines broken.
	• Fluid Pressure	— Too low.
P NO PARK	• Detent Lever (711)	— Incomplete travel. — Misaligned.
	• Actuator Rod (710)	— Rabbit ears bent, disconnected or broken.
	• Detent Spring (41)	— Mispositioned.
	• Parking Pawl (703)	— Broken.
	• Pawl Shaft (702)	— Broken.
	• Park Bracket (713)	— Bent or broken.
	• Bolt (714)	— Loose or broken.
	• Front Internal Gear (661)	— Splines broken.
	• Manual Shaft (708)	— Flats not parallel.
REMAINS IN PARK	• Actuator Rod Assembly (710)	— Stretched.
DIFFICULT TO SHIFT OUT OF PARK	• Pawl Return Spring (705)	— Weak or broken.
	• Vehicle	— Parked on hill.

ALL ILLUSTRATION NUMBERS REFERENCE HYDRA-MATIC 4L80-E UNIT REPAIR SECTION

MH0229-4L80-E

Figure 8 Diagnosis Chart D

CONDITION	INSPECT COMPONENT	FOR CAUSE
WILL NOT STAY IN PARK	• Detent Spring (41)	— Weak or broken.
R NO REVERSE	• Case (7)	— Rear band anchor pin broken or not positioned.
	• Center Support (640)	— Leaking at case or broken.
	• Center Support Seal (639)	— Leaking.
	• Center Support Bolt (25)	— Loose, broken or feed hole blocked.
	• Rear Band (657)	— Broken, worn or not anchored.
	• Rear Band Apply Pin (73)	— Too short or binding in case.
	• Piston (65)	— Binding in case.
	• Seal (66)	— Leaking, damaged or worn.
	• Gasket (63)	— Damaged or displaced.
	• Cover (62)	— Damaged.
	• Bolts (61)	— Broken, loose or missing.
	• Checkball	— Missing.
	• Fluid Pressure	— Too low.
	(Direct Clutch Components) • Reaction Plates (618)	— Splines worn.
	• Friction Plates (611)	— Splines or friction worn.
	• Spring Assembly (607)	— Jammed.
	• Housing (623)	— Cracked.
	• Piston (619)	— Leaking.
	• Seal (620, 621, 622)	— Leaking.
	• Ball Check	— Leaking.
D1 NO FIRST GEAR	* See D4 — No First Gear	
	• Housing (504)	— Broken.
	• Case (7)	— Rear band anchor pin broken or not positioned.
	• Detent Lever (711)	— Misaligned.
NO SECOND GEAR	* See D4 — No Second Gear	
NO OVERRUN BRAKING	* See D3 — No Overrun Braking	
	• Possible Codes — 28 PSM — 68 Overdrive Ratio — 85 Undefined Ratio	

ALL ILLUSTRATION NUMBERS REFERENCE HYDRA-MATIC 4L80-E UNIT REPAIR SECTION

MH0230-4L80-E

Figure 9 Diagnosis Chart E

CONDITION	INSPECT COMPONENT	FOR CAUSE
NO OVERRUN BRAKING (Continued)	• Pressure Switch Manifold (40)	– Pinched wire. – Loose connector. – Loose bolt causing leakage. – No signal to PCM.
NO ENGINE BRAKING	• Rear Band (657)	– Damaged, worn or not anchored.
	• Rear Band Apply Pin (73)	– Too short or binding in case.
	• Piston (65)	– Binding in case.
	• Seal (66)	– Worn or damaged.
	• Cover (62)	– Damaged.
	• Gasket (63)	– Damaged or missing.
	• Bolt (61)	– Loose, broken or missing.
	• Checkball	– Missing, damaged, not sealing or missized.
	• Fluid Pressure	– Too low.
	• Output Shaft (671)	– Shaft or splines broken.
	• Main Shaft (662)	– Shaft or splines broken.
	• Thrust Washer (218)	– Worn or damaged.
	• Bushing (234)	– Worn or damaged.
D2 NO FIRST GEAR	* See D4 – No First Gear	
	• Front Band (628)	– Stuck on.
NO SECOND GEAR	* See D4 – No Second Gear	
	• Case (7)	– Front band anchor pin broken or not properly positioned. – Intermediate clutch feed cup plug missing or not seated.
NO OVERRUN BRAKING	* See D3 – No Overrun Braking	
NO ENGINE BRAKING	• Bushing (234)	– Worn or damaged.
	• Thrust Washer (218)	– Worn or damaged.
	• Rear Gearset	– Spalled or broken.
	• Reaction Drum & Carrier (651)	– Broken.
	• Main Shaft (662)	– Shaft or splines broken.
	• Output Shaft (671)	– Shaft or splines broken.
	• Sun Gear Shaft (649)	– Shaft or splines broken.
NO SECOND GEAR ENGINE BRAKING	• Fluid Pressure	– Too low.
	• Direct Clutch Housing (623)	– Internal diameter splines worn. – Outer band surface worn.

ALL ILLUSTRATION NUMBERS REFERENCE HYDRA-MATIC 4L80-E UNIT REPAIR SECTION

MH0231-4L80-E

Figure 10 Diagnosis Chart F

CONDITION	INSPECT COMPONENT	FOR CAUSE
NO SECOND GEAR ENGINE BRAKING (Continued)	• Front Band (628)	— Broken, worn or not anchored.
	• Apply Pin (55)	— Too short or binding in case.
	• Apply Clip (56)	— Broken or missing.
	• Piston (58)	— Cracked, broken or binding.
	• Seal (57)	— Damaged or worn.
	• Case (7)	— Cracked or damaged.
	• Spacer Plate (46)	— Damaged.
	• Gasket (48)	— Torn or pinched.
	• Valve Body Bolts (35)	— Loose, broken or missing.
D3 NO FIRST GEAR	* See D4 — No First Gear	
	• Front Band (628)	— Stuck on.
NO SECOND GEAR	* See D4 — No Second Gear	
NO THIRD GEAR	* See D4 — No Third Gear	
	• Front Band (628)	— Stuck on.
NO OVERRUN BRAKING	• Clutch Plates (508, 509)	— Splines or plate wear.
	• Thrust Washer (218)	— Damaged or worn.
	• Output Shaft (671)	— Shaft or splines broken.
	• Seals	— Cut or nicked.
	• Checkball	— Leaking.
	• Piston (505)	— Jammed, cracked or damaged.
	• Housing (504)	— Cracked or damaged.
	• Sun Gear (650)	— Worn.
	• Spring Assembly (506)	— Jammed.
	• Oil Feed	— Plugged.
NO ENGINE BRAKING	• Main Shaft (662)	— Shaft or splines broken.
	• Bushing (234)	— Damaged or worn.
D4 NO FIRST GEAR	• Low Roller Assembly (644)	— Not attached or race broken.
	• Center Support (640)	— Support or splines broken.
	• Case (7)	— Damage near center support.
	• Snap Rings (633, 643)	— Not seated.

ALL ILLUSTRATION NUMBERS REFERENCE HYDRA-MATIC 4L80-E UNIT REPAIR SECTION

MH0232-4L80-E

Figure 11 Diagnosis Chart G

CONDITION	INSPECT COMPONENT	FOR CAUSE
FIRST GEAR ONLY	• Sun Gear Shaft (649)	— Shaft or splines broken.
	• Output Speed Sensor (22)	— Reads zero.
	• Input Speed Sensor (22)	— Reads zero.
FIRST AND SECOND GEAR ONLY	• Solenoid B (311)	— Stuck "off". — Loose connector. — No voltage to solenoid. — Solenoid o-ring failure. — no PCM signal to solenoid.
	• 2-3 Shift Valve (312)	— Stuck
	• Quad Driver Module	— Failed.
	• Possible Codes — 68 Overdrive Ratio — 81 QDM & Solenoid B Fault — 85 Undefined Ratio — 87 Solenoid B Stuck Off	
SECOND GEAR ONLY	• Possible Codes — 24 Output Speed — 53 System Voltage High — 75 System Voltage Low — 81 QDM & Solenoid B	
SECOND AND THIRD GEAR ONLY	• Solenoid A (313)	— Stuck "off". — No voltage to solenoid. — Loose connector. — Solenoid o-ring failed. — No PCM signal to solenoid.
	• 1-2 Shift Valve (314)	— Stuck.
	• Quad Driver Module	— Failed.
	• Possible Codes — 68 Overdrive Ratio — 82 QDM & Solenoid A Fault — 85 Undefined Ratio	
FIRST AND FOURTH GEAR ONLY (Second And Third Gear Available In D3 And D2)	• Solenoid A (313)	— Stuck "on". — Pinched wire to ground.
	• 1-2 Shift Valve (314)	— Stuck.
	• Quad Driver Module	— Failed.
	• Possible Codes — 68 Overdrive Ratio — 82 QDM and Solenoid A Fault — 85 Undefined Ratio	

ALL ILLUSTRATION NUMBERS REFERENCE HYDRA-MATIC 4L80-E UNIT REPAIR SECTION

MH0233-4L80-E

Figure 12 Diagnosis Chart H

CONDITION	INSPECT COMPONENT	FOR CAUSE
THIRD AND FOURTH GEAR ONLY (Second Gear Available In D3 And D2)	• Solenoid B (311)	– Stuck "on". – Pinched wire to ground.
	• 2-3 Shift Valve (312)	– Stuck.
	• Quad Driver Module	– Failed.
	• Possible Codes – 81 QDM and Solenoid B Fault – 85 Undefined Ratio – 86 Solenoid B Stuck On	
NO SECOND GEAR	• Case (7)	– Intermediate clutch feed cup plug missing or not seated.
	(Intermediate Clutch Components) • Backing Plate (630)	– Broken.
	• Snap Ring (633)	– Missing or not seated.
	• Friction Plates (631)	– Worn.
	• Outer Race (625)	– Splines worn.
	• Center Support (640)	– Cracked or oil feed hole blocked.
	• Center Support Bolt (25)	– Broken or loose. – Oil hole blocked.
	• Seals (637, 638)	– Worn.
	• Piston (636)	– Cracked or jammed.
	• Springs (635)	– Jammed.
	• Transmission Fluid	– Improper fluid. – Additive package.
	• Intermediate Sprag (624)	– Outer race splines worn. – Outer race broken. – Splines or inner race worn.
	• Direct Clutch Housing (623)	– Broken.
	• Snap Ring (627)	– Missing or not seated.
NO THIRD GEAR	(Direct Clutch Components) • Seal (620, 621, 622)	– Leaking.
	• Ball Check	– Leaking.
	• Piston (619)	– Cracked or jammed.
	• Housing (623)	– Cracked.
	• Reaction Plates (618)	– Splines worn.
	• Friction Plates (611)	– Splines or friction worn.
	• Spring Assembly (607)	– Jammed.
	• Center Support Seal (639)	– Leaking at case.
	• Center Support (640)	– Broken or leaking at case.

ALL ILLUSTRATION NUMBERS REFERENCE HYDRA-MATIC 4L80-E UNIT REPAIR SECTION

MH0234-4L80-E

Figure 13 Diagnosis Chart I

CONDITION	INSPECT COMPONENT	FOR CAUSE
NO THIRD GEAR (Continued)	(Direct Clutch Components)	
	• Center Support Bolt (25)	— Loose or broken. — Hole blocked.
	• Solenoid B (311)	— Stuck "off". — Pinched wire. — O-ring failure. — No voltage to solenoid.
	• 2-3 Shift Valve (312)	— Stuck.
	• PCM	— No signal to solenoid.
	• Quad Driver Module	— Failed.
	• Possible Codes — 81 QDM and Solenoid B Fault — 85 Undefined Ratio — 87 Solenoid B Stuck Off	
NO FOURTH GEAR	(Fourth Clutch Components)	
	• Seals (527, 531)	— Nicked or cut.
	• Cup Plug (530)	— Missing.
	• Bolt (26)	— Loose, broken or missing.
	• Piston (528)	— Jammed.
	• Spring Assembly (532)	— Jammed.
	• Snap Ring (523)	— Not seated.
	• Friction Plates (525)	— Worn or burned.
	• Reaction Plates (526)	— Splines worn.
	• Housing (529)	— Damaged or cracked.
	(Overrun Clutch Components)	
	• Housing (504)	— Broken.
	• Reaction Plates (508)	— Splines worn.
	• Sun Gear (650)	— Worn.
	• Solenoid B (311)	— Stuck "off". — Pinched wire. — O-ring failure. — No voltage to solenoid.
	• 2-3 Shift Valve (312)	— Stuck.
	• PCM	— No signal to solenoid.
	• Quad Driver Module	— Failed.
	• Possible Codes — 21 TPS High — 22 TPS Low — 28 Pressure Switch Manifold — 68 Overdrive Ratio — 75 System Voltage Low — 81 QDM and Solenoid B	

ALL ILLUSTRATION NUMBERS REFERENCE HYDRA-MATIC 4L80-E UNIT REPAIR SECTION

MH0235-4L80-E

Figure 14 Diagnosis Chart J

CONDITION	INSPECT COMPONENT	FOR CAUSE
NO TCC	• TCC Solenoid (323)	— Stuck off. — O-ring failed. — No voltage to solenoid. — Poor connection.
	• Quad Driver Module	— Failed.
	• PCM	— No signal to solenoid.
	• Brake Switch	— Contact corroded. — Poor connection. — Pinched wire. — Misadjusted. — No supply voltage.
	• TCC Valve (223)	— Stuck off due to sediment or undersized bore.
	• Retainer Pin (211)	— Broken.
	• Torque Converter (1)	— Ballooning.
	• Turbine Shaft (502)	— Plugged oil holes.
	• Turbine Shaft Seals (501)	— Ineffective.
	• Pump Body Bushing (202)	— Worn.
	• O-ring (2)	— Heat set.
	• Oil Transfer Hole Cup Plug	— Leaking.
	• Regulated Apply Valve (324)	— Stuck.
	• TCC Valve Release Exhaust Orificed Cup Plug	— Blocked.
	• Possible Codes — 21 TPS High — 22 TPS Low — 28 Pressure Switch Manifold — 37 Brake Switch Stuck On — 39 TCC Stuck Off — 53 System Voltage High — 68 Overdrive Ratio — 75 System Voltage Low — 81 QDM and Solenoid B — 83 QDM and TCC Solenoid * See Incorrect TCC Apply Or Release	
SOFT TCC APPLY	• Turbine Shaft Seals (501)	— Ineffective.
	• Pump Body Bushing (202)	— Worn.
	• O-ring (2)	— Heat set.
	• Oil Transfer Hole Cup Plug	— Leaking.
	• TCC Solenoid (323)	— Malfunction.
	• Fluid	— Low pressure.

ALL ILLUSTRATION NUMBERS REFERENCE HYDRA-MATIC 4L80-E UNIT REPAIR SECTION

MH0236-4L80-E

Figure 15 Diagnosis Chart K

CONDITION	INSPECT COMPONENT	FOR CAUSE
SLIPPING TCC	• TCC Valve Release Exhaust Orificed Cup Plug	— Blocked.
	• Turbine Shaft Seal	— Cut.
TCC STUCK ON	• Gasket (6)	— Damaged.
	• TCC Solenoid (323)	— Stuck on. — Pinched wire to ground.
	• TCC Apply Valve (324)	— Stuck.
	• Quad Driver Module	— Failed.
	• Possible Codes — 83 QDM And TCC Solenoid	
	* See Incorrect TCC Apply Or Release	
INCORRECT TCC APPLY OR RELEASE	• Output Speed Sensor (22)	— Poor connection. — Pinched wire. — Coil wire broken. — Incorrect air gap. — Inadequate signal.
	• Throttle Position Sensor	— Poor connection. — Pinched wire. — Incorrect resistance.
	• PCM	— Failed.
	• Pressure Switch Manifold (40)	— Poor connection. — No signal to PCM. — Pinched wire.
	• Transmission Temperature Sensor (332)	— Poor connection. — No signal to PCM. — Incorrect resistance. — Pinched wire.
	• Engine Coolant Temperature Sensor	— Poor connection. — No signal to PCM. — Incorrect resistance. — Pinched wire.
	• Brake Switch	— Poor connection. — Pinched wire. — No voltage supply. — Misadjusted.
	• Possible Codes — 14 Engine Temperature Sensor High — 15 Engine Temperature Sensor Low — 21 Throttle Position Sensor High	

ALL ILLUSTRATION NUMBERS REFERENCE HYDRA-MATIC 4L80-E UNIT REPAIR SECTION

MH0237-4L80-E

Figure 16 Diagnosis Chart L

CONDITION	INSPECT COMPONENT	FOR CAUSE
INCORRECT TCC APPLY OR RELEASE (Continued)	• Possible Codes (Cont.) — 22 Throttle Position Sensor Low — 24 Output Speed Sensor — 28 Pressure Switch Manifold — 58 Transmission Temperature Sensor High — 59 Transmission Temperature Sensor Low — 68 Overdrive Ratio	
Only 2WD	• Digital Ratio Adapter (DRAC)	— Malfunction. — Incorrect.
CONVERTER BALLOONING	• Converter Limit Valve (214)	— Stuck open due to sediment or undersized bore.
@ High Speeds	• Converter Limit Valve Feedback Orificed Cup Plug	— Blocked.
NO TORQUE MULTIPLICATION	• Stator Shaft (235)	— Broken or detached from pump cover.
FLUID FOAMING	• Fluid	— Contaminated (antifreeze). — Transmission overfilled.
	• Engine	— Overheated.
	• Filter (31)	— Cracked or not seated.
	• Seal (32)	— Damaged or not seated.
	• Vehicle	— Overloaded.
NOISE	• Torque Converter (1)	— Loose lug bolts. — Out of balance. — Internal failure.
	• Transmission/Engine	— Misaligned.
	• Case Extension (19)	— Output shaft support bushing worn.
VIBRATION	• Torque Converter (1)	— Out of balance. — Internal failure.
	• Transmission/Engine	— Misaligned.
	• Case Extension (19)	— Output shaft support bushing worn.
	• Turbine Shaft (502)	— Worn stator shaft bushing surface.
	• Main Shaft (662)	— Worn bushing.
	• Output Shaft (671)	— Worn bushing.
	• Bearing (668)	— Worn.

ALL ILLUSTRATION NUMBERS REFERENCE HYDRA-MATIC 4L80-E UNIT REPAIR SECTION

MH0238-4L80-E

Figure 17 Diagnosis Chart M

CONDITION	INSPECT COMPONENT	FOR CAUSE
ENGINE STALL	• Forward Clutch Housing (602)	— Seized bearing if holes plugged.
	(Fourth Clutch Components) • Plates (525, 526) • Piston (528) • Spring Assembly (532)	 — Seized or jammed. — Jammed. — Jammed.
	(Overrun Clutch Components) • Plates (508, 509) • Piston (505) • Spring Assembly (506)	 — Seized or jammed. — Jammed. — Jammed.
OIL OUT BREATHER TUBE	• Pump Cover (206)	— Cross channel leakage can pressurize vent area.
	• Fluid	— Foaming and filling pump vent ports. — Transmission overfilled.
	• Transmission	— Overheated.
NO TORQUE IN SECOND GEAR	• Intermediate Sprag (624)	— Worn. — Excessive eccentricity. — Sprag rolled over or damaged.
SECOND GEAR STARTS	• Intermediate Clutch Plates (631, 632)	— Seized.
	• Direct Clutch Lube Feed	— Blocked.
	• Center Support Springs (635)	— Jammed.
	• Center Support Piston (636)	— Jammed.
	• Solenoid A (313)	— Stuck "off". — O-ring failed. — No voltage to solenoid. — Poor connection.
	• PCM	— To PCM signal to solenoid.
	• Quad Driver Module	— Failed.
	• 1-2 Shift Valve (314)	— Stuck.
	• Possible Codes — 82 QDM and Solenoid A	
THIRD GEAR STARTS	(Forward Clutch Components) • Driving Hub (615) • Plates (610, 611)	 — Holes plugged. — Seized.

ALL ILLUSTRATION NUMBERS REFERENCE HYDRA-MATIC 4L80-E UNIT REPAIR SECTION

MH0239-4L80-E

Figure 18 Diagnosis Chart N

CONDITION	INSPECT COMPONENT	FOR CAUSE
THIRD GEAR STARTS (Continued)	(Direct Clutch Components)	
	• Plates (611, 618)	— Seized.
	• Piston (619)	— Jammed.
	• Spring Assembly (607)	— Jammed.
	• Lube Feed Hole	— Blocked.
FOURTH GEAR STARTS	• Solenoid B	— Stuck "on". — Pinched wire to ground.
	• Possible Codes — 86 Solenoid B Stuck On	
ERRATIC SHIFT QUALITY	• Gasket (6)	— Damaged.
	• Oil Transfer Hole Cup Plug	— Leaking.
	• Oil Seal Rings (219)	— Damaged.
TRANSMISSION SLIPS	• Fluid Level	— Too high or low.
TRANSMISSION SEIZED	(Rear Lube Components)	
	• Cooler Circuit	— Blocked or leaking.
	• Spacer Plate/Gasket	— Hole missing.
	• Lube Pipe (39)	— Poor seal. — Damaged. — Missing clips.
	• Valve Body (301)	— Loose, broken or missing bolts.
	• Filter (Inline)	— Blocked.
	• Output Shaft Seal (20)	— Missing or damaged. — Lube holes missing or blocked.
	• Main Shaft (662)	— Lube holes missing or blocked.
	• Center Support (640)	— Lube hole missing or blocked.
	• Apply Pin (55)	— Too long. — Binding in case.
	• Piston (58)	— Binding in case.
	• Center Support (640)	— Not held.
	• Snap Ring (643)	— Not seated.
	• Sun Gear Shaft (649)	— Bearing surface worn. — Lube hole blocked.
	• Rear Gearset	— Bearing surface worn.
	• Main Shaft (662)	— Lube holes plugged.
In 2nd, 3rd And 4th	• Rear Band (657)	— Locked on.
	• Rear Servo Pin (73)	— Too long or binding in case.
	• Piston (65)	— Binding in case.

ALL ILLUSTRATION NUMBERS REFERENCE HYDRA-MATIC 4L80-E UNIT REPAIR SECTION

MH0240-4L80-E

Figure 19 Diagnosis Chart O

CONDITION	INSPECT COMPONENT	FOR CAUSE
CASE EXTENSION BEARING/SEAL FAILED	• Orifice Plate	— Missing or blocked hole.
	• Case Extension (19)	— Lube passages blocked or missing.
INACCURATE SHIFT POINTS	• Output Speed Sensor (22)	— Pinched or broken wire. — Loose connector. — Air gap incorrect. — Inadequate signal. — Coil damaged. — Damaged rotor teeth. — Loose connection.
	• Throttle Position Sensor	— Pinched or damaged wire. — Incorrect resistance. — Loose connector. — PCM malfunction.
	• Pressure Switch Manifold	— Loose connector. — Loose bolts causing leakage. — Pinched wire. — No signal to PCM.
	• Possible Codes — 21 Throttle Position Sensor High — 22 Throttle Position Sensor Low — 24 Output Speed Sensor — 28 Pressure Switch Manifold — 85 Undefined Ratio	
	• Axle Ratio	— Incorrect or changed from original.
	• Tire Size	— Incorrect or changed from original.
Only 2WD	• Digital Ratio Adapter (DRAC)	— Incorrect. — Malfunction.
HARSH SHIFT	• Line Pressure	— Too high. — Too low.
	• Force Motor (320)	— Failed "off". — Loose connector.
	• PCM	— Loose connector.
	• Accumulator Piston	— Leaking. — Stuck.
	• Accumulator Spring	— Incorrect.
	• Checkballs	— Missing.
	• Calibration PROM	— Incorrect.
	• Possible Codes — 21 TPS High — 22 TPS Low — 24 Output Speed	

ALL ILLUSTRATION NUMBERS REFERENCE HYDRA-MATIC 4L80-E UNIT REPAIR SECTION

MH0241-4L80-E

Figure 20 Diagnosis Chart P

CONDITION	INSPECT COMPONENT	FOR CAUSE
HARSH SHIFT (Continued)	• Possible Codes (Cont.) – 28 Pressure Switch Manifold – 53 System Voltage High – 68 Overdrive Ratio – 73 Force Motor Current – 75 System Voltage Low – 81 QDM And Solenoid B – 85 Undefined Ratio	
D To R	• Direct Lube Exhaust	– Blocked.
	• Forward Clutch Spring (607)	– Not acting.
	• Snap Ring (616)	– Not seated.
	• Checkball	– Plugged.
3-4	• Spring Assembly (532)	– Not compressing evenly.
	• Air Bleed	– Plugged.
	• Bolt (26)	– Oil feed hole plugged.
4-3	• Snap Ring (533)	– Not seated.
	• Spring Assembly (532)	– Not acting.
	• Bolt (26)	– Oil feed hole plugged.
	• Cup Plug (530)	– Plugged.
	• Direct Lube Exhaust	– Blocked.
D4 To D3, D2 Or D1	• Spring Assembly (506)	– Not functioning.
	• Checkball	– Plugged.
	• Snap Ring (511)	– Not seated.
SOFT SHIFT	• Line Pressure	– Too low.
	• Force Motor (320)	– Stuck "on". – Broken clip causing leakage. – Pinched wire to ground.
	• PCM	– Failed.
	• Accumulator Piston	– Leaking. – Stuck.
	• Accumulator Spring	– Incorrect.
	• Calibration PROM	– Incorrect.
	• Possible Codes – 73 Force Motor Current	
Into R	• Direct Clutch Oil Feed	– Plugged.
	• Direct Lube Exhaust	– Blocked.

ALL ILLUSTRATION NUMBERS REFERENCE HYDRA-MATIC 4L80-E UNIT REPAIR SECTION

MH0242-4L80-E

Figure 21 Diagnosis Chart Q

CONDITION	INSPECT COMPONENT	FOR CAUSE
SOFT SHIFT (Continued) R To D	• Direct Clutch Spring (607)	— Not acting.
	• Snap Ring (616b)	— Not engaged or missing.
	• Ball Check	— Plugged.
2-1	• Center Support Springs (635)	— Not acting.
	• Snap Ring (634)	— Not seated.
	• Center Support (640)	— Air bleed blocked.
2-3	• Direct Clutch Oil Feed	— Plugged.
	• Direct Lube Exhaust	— Blocked.
3-2	• Direct Spring Assembly (607)	— Not acting.
	• Snap Ring (608)	— Not engaged or missing.
	• Ball Check	— Plugged.
D3 To D2	• Ball Check	— Missing.
	• Orifices	— Incorrect Sizes.
DELAYED 1-2 SHIFT	• Output Speed Sensor (22)	— Pinched or broken wire. — Loose connector. — Air gap incorrect. — Inadequate signal. — Coil damage.
	• Input Speed Sensor (22)	— Pinched or damaged wire. — Coil damage. — Inadequate signal.
	• Pressure Switch Manifold (40)	— Loose connector. — Pinched wire. — No signal to PCM. — Loose bolts causing leakage.
	• Calibration PROM	— Incorrect.
	• Possible Codes — 24 Output Speed Sensor — 28 Pressure Switch Manifold — 85 Undefined Ratio	
Only 2WD	• Digital Ratio Adapter (DRAC)	— Malfunction. — Loose connector.
NO D2 TO D1	• Rear Band (657)	— Broken, worn or not anchored.
	• Detent Lever (711)	— Incomplete travel.
NO D3 TO D2	• Front Band (628)	— Broken, worn or not anchored.

ALL ILLUSTRATION NUMBERS REFERENCE HYDRA-MATIC 4L80-E UNIT REPAIR SECTION

MH0243-4L80-E

Figure 22 Diagnosis Chart R

CONDITION	INSPECT COMPONENT	FOR CAUSE
LEAKS AT: OIL PAN	• Oil Pan (28)	— Damaged or not flat.
	• Gasket (29)	— Damaged.
	• Case (7)	— Porosity or cracked.
	• Bolt (27)	— Flange inside out. — High or low torque.
FLUID FILL TUBE	• Seal	— Cut or nicked. — Missing.
	• Case (7)	— Porosity.
	• Fill Tube	— Damaged at case end. — Not seated in case.
	• Brackets	— Out of position causing tension on fill tube.
ELECTRICAL CONNECTOR	• Electrical Connector	— Damaged or not seated.
	• O-ring Seal	— Cut or nicked. — Missing.
	• Case (7)	— Porosity or cracked.
COOLER CONNECTORS	• Cooler Connectors (8)	— Stripped threads. — Damaged flare. — High or low torque.
	• Case (7)	— Stripped threads. — Porosity. — Debris in threads.
CASE EXTENSION	• Case Extension (19)	— Porosity or cracked.
	• Case (7)	— Porosity or cracked.
	• Seal (15)	— Cut or nicked. — Missing.
	• Bolt (21)	— Low torque. — Missing.
MANUAL SHAFT	• Seal (707)	— Cut or nicked. — Not seated.
	• Linkage	— Misadjusted.
PUMP BODY SEAL	• Seal (201)	— Cut, nicked or worn. — Missing garter spring.
	• Torque Converter (1)	— Damaged hub.
	• Bolt	— Low torque.

ALL ILLUSTRATION NUMBERS REFERENCE HYDRA-MATIC 4L80-E UNIT REPAIR SECTION

MH0244-4L80-E

Figure 23 Diagnosis Chart S

CONDITION	INSPECT COMPONENT	FOR CAUSE
LEAKS AT: (Continued) SPEED SENSOR	• Seal	— Cut, missing, nicked.
	• Speed Sensor (22)	— Damaged. — Not seated. — Bracket damaged.
	• Bolt (23)	— Low torque. — Missing. — Damaged threads.
	• Case (7)	— Porosity or cracked.
OUTPUT SHAFT SEAL	• Seal (20)	— Cut or nicked.
	• Case (7)	— Porosity or cracked.
LINE PRESSURE PLUG	• Plug (24)	— Stripped threads. — Low or high torque.
	• Case (7)	— Porosity or cracked. — Damaged threads.

ALL ILLUSTRATION NUMBERS REFERENCE HYDRA-MATIC 4L80-E UNIT REPAIR SECTION

MH0245-4L80-E

Figure 24 Diagnosis Chart T

1991 HYDRA-MATIC 4L80-E MALFUNCTION CODE DIAGNOSIS

This chart shows where diagnosis information is located for each of the transmission malfunction codes. The diagnosis trouble tree is always the first diagnostic procedure to follow, but additional information is sometimes contained in a different location.

CODE	INSPECT	LOCATION
21 TPS High	• Code 21 Diagnosis Trouble Tree	Section 7A4
22 TPS Low	• Code 22 Diagnosis Trouble Tree	Section 7A4
24 Output Speed Sensor	• Code 24 Diagnosis Trouble Tree	Section 7A4
28 PSM	• Code 28 Diagnosis Trouble Tree	Section 7A4
39 TCC Stuck Off	• Code 39 Diagnosis Trouble Tree • "NO TCC" In Three Column Diagnosis Charts	Section 7A4 This Section
53 System Voltage High	• Code 53 Diagnosis Trouble Tree	Section 7A4
58 Trans Temp High	• Code 58 Diagnosis Trouble Tree	Section 7A4
59 Trans Temp Low	• Code 59 Diagnosis Trouble Tree	Section 7A4
68 Overdrive Ratio	• Code 68 Diagnosis Trouble Tree • "NO TCC" In Three Column Diagnosis Charts • "NO FOURTH GEAR" In Three Column Diagnosis Charts • Transmission For Slipping Clutches	Section 7A4 This Section This Section
73 Force Motor Current	• Code 73 Diagnosis Trouble Tree	Section 7A4
75 System Voltage Low	• Code 75 Diagnosis Trouble Tree	Section 7A4

MH0250-4L80-E

Figure 25 Malfunction Code Diagnosis Chart A

CODE	INSPECT	LOCATION
81 QDM Fault And Sol B	• Code 81 Diagnosis Trouble Tree	Section 7A4
82 QDM Fault And Sol A	• Code 82 Diagnosis Trouble Tree	Section 7A4
83 TCC QDM Fault	• Code 83 Diagnosis Trouble Tree	Section 7A4
85 Undefined Ratio	• Code 85 Diagnosis Trouble Tree	Section 7A4
	• "NO THIRD GEAR" In Three Column Diagnosis Charts	This Section
	• Transmission For Slipping Clutches	
86 Solenoid B Stuck On	• Code 86 Diagnosis Trouble Tree	Section 7A4
	• "THIRD AND FOURTH GEAR ONLY" In Three Column Diagnosis Charts	This Section
	• "FOURTH GEAR STARTS" In Three Column Diagnosis Charts	This Section
87 Solenoid B Stuck Off	• Code 87 Diagnosis Trouble Tree	Section 7A4
	• "FIRST AND SECOND GEAR ONLY" In Three Column Diagnosis Charts	This Section
	• "NO THIRD GEAR" In Three Column Diagnosis Charts	This Section

MH0251-4L80-E

Figure 26 Malfunction Code Diagnosis Chart B

1991 HYDRA-MATIC 4L80-E MALFUNCTION CODE ACTIONS

Some malfunction codes have "actions" associated with them. This means if a particular code is set, the PCM commands the transmission to behave in a certain way. This protects the transmission components from damage, and allows the transmission to function until it can be serviced.

MALFUNCTION CODES	ACTION
24 — Output Speed 53 — System Voltage High 75 — System Voltage Low 81 — QDM And Solenoid B	STUCK IN SECOND GEAR
21 — TPS High 22 — TPS Low 28 — Pressure Switch Manifold 68 — Overdrive Ratio 75 — System Voltage Low	NO FOURTH GEAR
21 — TPS High 22 — TPS Low 28 — Pressure Switch Manifold 53 — System Voltage High 68 — Overdrive Ratio 75 — System Voltage Low 81 — QDM And Solenoid B	NO TCC
28 — Pressure Switch Manifold 68 — Overdrive Ratio	PSM DEFAULTS TO READ D4
21 — TPS High 22 — TPS Low 24 — Output Speed 28 — Pressure Switch Manifold 53 — System Voltage High 68 — Overdrive Ratio 73 — Force Motor Current 75 — System Voltage Low 81 — QDM And Solenoid B 85 — Undefined Ratio	LINE PRESSURE DEFAULTS TO PRESET VALUES (Preset values vary with calibration and gear selector position. This action may be described as harsh or erratic shift quality.)

MH0252-4L80-E

Figure 27 Malfunction Code Actions

ELECTRONIC COMPONENT MALFUNCTIONS

This chart gives some general information about electronic component malfunctions. Use this information to become familiar with possible conditions caused by transmission/vehicle electrical components. Refer to the diagnosis charts for more specific information.

COMPONENT/SYSTEM	CAN EFFECT
Throttle Position Sensor	— Shift pattern (erratic). — Line pressure (high or low). — Engine (rough).
Engine Speed Sensor	— TCC apply (at wrong time, or no apply).
Input Speed Sensor	— TCC apply (no apply).
Output Speed Sensor	— Shift pattern (erratic). — TCC apply (at wrong time).
Force Motor	— Line pressure (high or low). — Shift quality (harsh or soft).
TCC Solenoid (PWM)	— TCC apply (timing, harsh or soft).
Pressure Switch Manifold	— TCC apply (won't apply). — Fourth gear (no fourth gear). — Shift quality (harsh). — Line pressure (high).
Transmission Temperature Sensor	— TCC control (on or off).
Engine Temperature Sensor	— TCC control (no apply).
Shift Solenoids	— Gear application (wrong gear, only two gears, no shift).

MH0253-4L80-E

Figure 28 Electronic Component Malfunctions

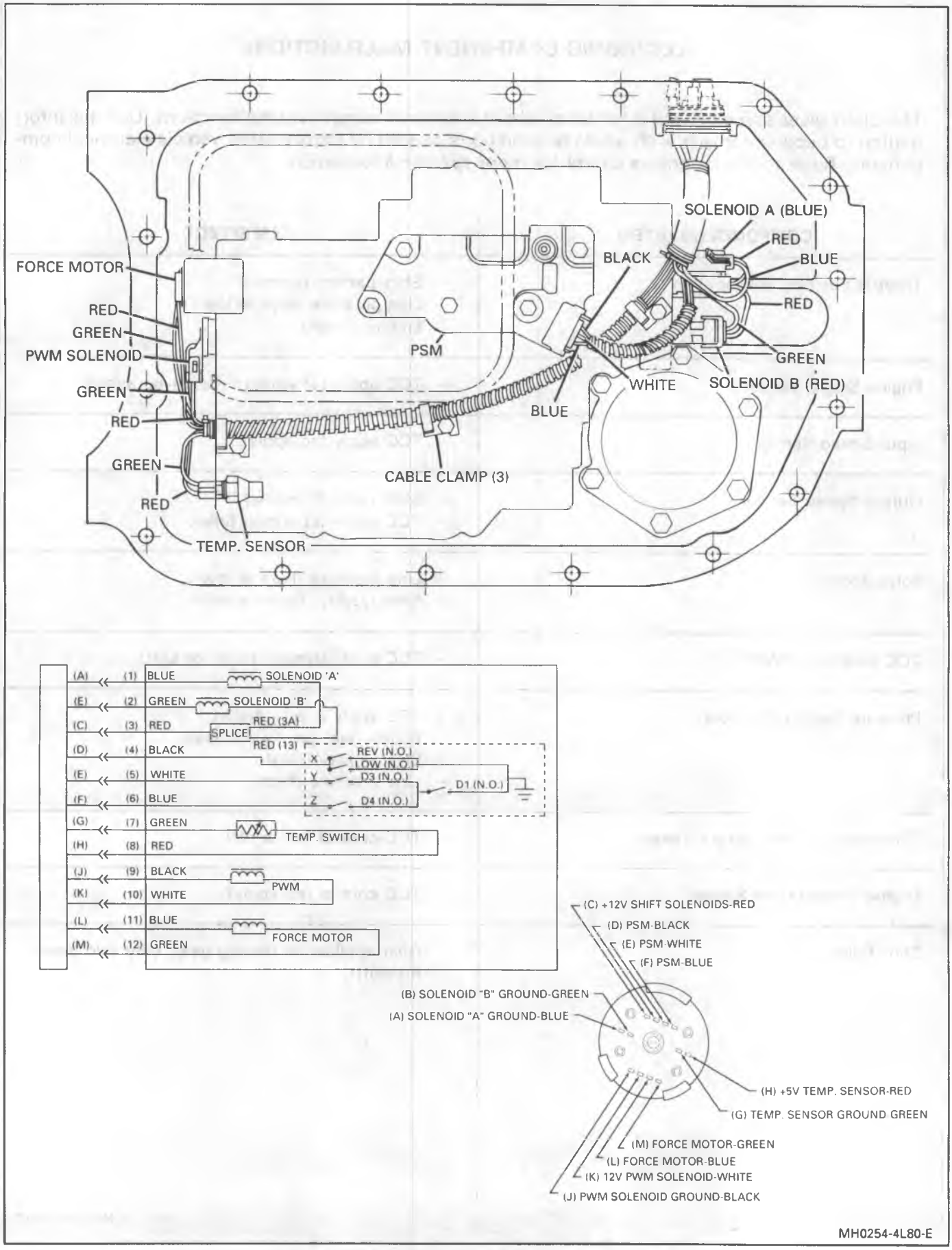

Figure 29 Wiring Diagram

THIS PAGE INTENTIONALLY LEFT BLANK

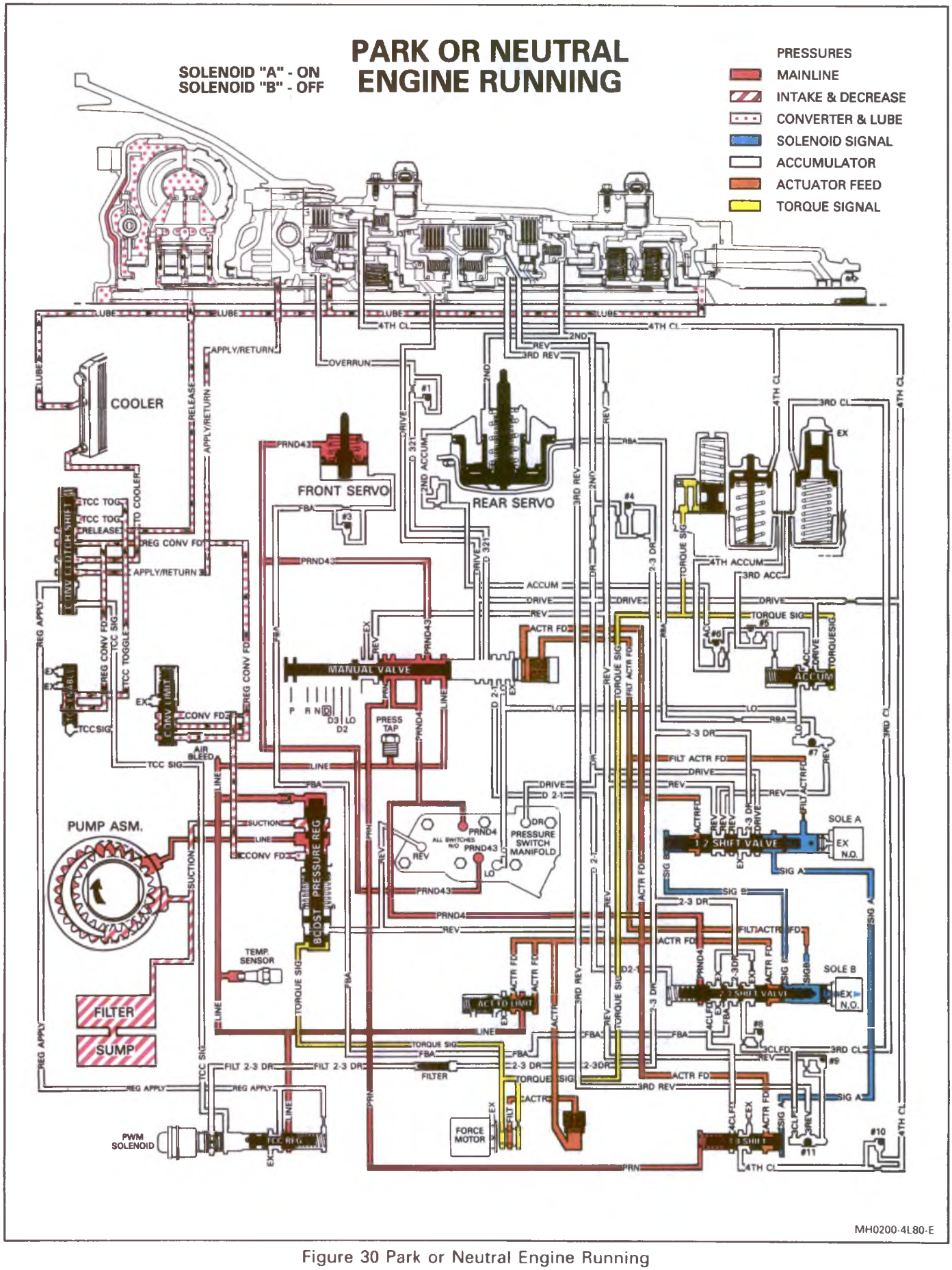

Figure 30 Park or Neutral Engine Running

PARK OR NEUTRAL
(Engine Running)

When the vehicle is started, the oil pump generates fluid flow from the transmission sump through the filter into the pump. Filtered transmission fluid is directed to the Pressure Regulator Valve.

- **Pressure Regulator Valve**: The pressure regulator valve regulates operating line pressure according to various driving conditions. Converter feed pressure is directed to the torque converter hydraulic system and regulated line pressure is directed to the Torque Converter Clutch Regulated Apply Valve , Actuator Feed Limit Valve and Manual Valve.
- **Torque Converter Clutch Regulated Apply Valve**: Line pressure is supplied to the TCCRAV to be utilized in other gear ranges.
- **Actuator Feed Limit Valve**: Regulates actuator feed pressure to the 1-2, 2-3, 3-4 shift valves the Force Motor and solenoids "A" and "B".
- **Manual Valve**: Line pressure from the Pressure Regulator Valve is supplied to the manual valve to be utilized in other gear ranges. In park range, line pressure is directed as PRND43, PRND4 and PRN fluid pressure.
- **Pressure Switch Manifold**: PRND4 and PRND43 fluid pressures from the manual valve are directed to their respective switches on the PSM, this sends a signal to the Powertrain Control Module (PCM) that the transmission is in park range.
- **Solenoid "A"**: Energized, Signal "A" fluid pressure forces the 1-2 shift valve to the extreme left against spring force.
- **Solenoid "B"**: De-energized, exhausting signal "B" fluid through the solenoid. Spring force holds the 2-3 shift valve to the extreme right.
- **1-2 Shift Valve**: Held to the left against spring force by signal "A" fluid pressure.
- **2-3 Shift Valve**: Held to the extreme right by spring force. This blocks the PRND4 fluid pressure at the 2-3 shift valve.
- **3-4 Shift Valve**: Held to the extreme right by spring force and PRN fluid pressure.
- **Front Servo**: PRND43 fluid pressure from the manual valve is directed to the front servo which assists the spring force to hold the front servo off.

MH0201-4L80-E

Figure 31 Park or Neutral Engine Running

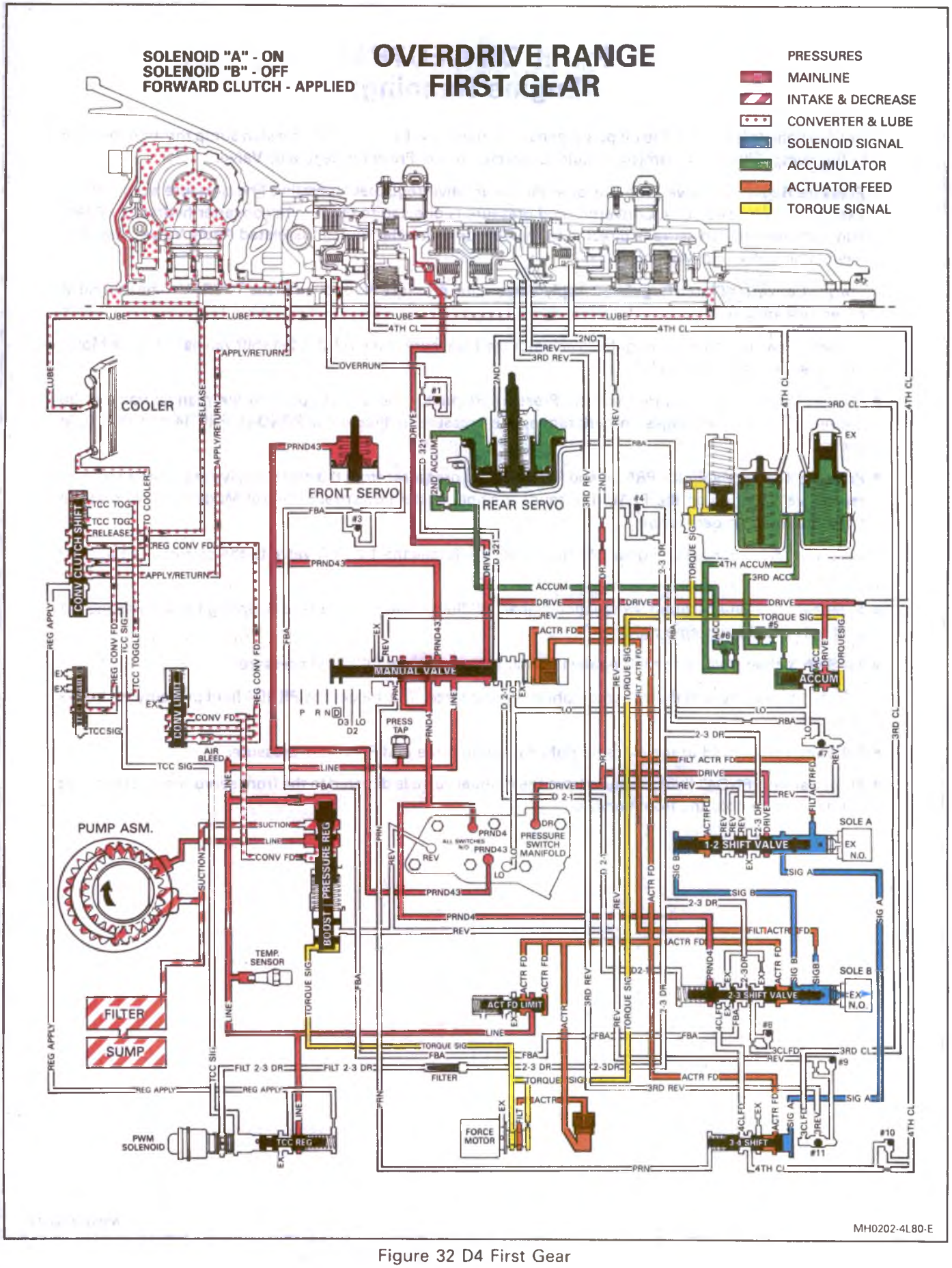

Figure 32 D4 First Gear

OVERDRIVE RANGE 1ST. GEAR

When the gear selector lever is moved to the overdrive position, the manual valve is repositioned to allow line pressure to flow in it's respective circuits.

- **Manual Valve**: In the overdrive range first gear, line pressure from the pressure regulator valve is directed as PRND4, PRND43 and Drive fluid pressures. The PRND4 fluid pressure is directed to the Pressure Switch Manifold (PSM) and to the 2-3 shift valve, the PRND43 fluid is directed to the Pressure Switch Manifold (PSM) and to the front servo, and the Drive fluid is directed to the Pressure Switch Manifold and forward clutch.
- **Pressure Switch Manifold (PSM)**: Drive, PRND4 and PRND43 fluid pressures from the manual valve are directed to the DR, PRND4 and PRND43 switches on the PSM, this sends a signal to the Powertrain Control Module (PCM) that the transmission is in overdrive range first gear.
- **Solenoid "A"**: Energized, signal "A" fluid pressure forces the 1-2 shift valve to the extreme left against spring force.
- **Solenoid "B"**: De-energized, exhausting signal "B" fluid through the solenoid. Spring force holds the 2-3 shift valve to the extreme right.
- **1-2 Shift Valve**: Drive fluid pressure from the manual valve is held at the 1-2 shift valve to be utilized in other gear ranges.
- **2-3 Shift Valve**: PRND4 fluid pressure from the manual valve is held at the 2-3 shift valve to be utilized in other gear ranges.
- **3-4 shift valve**: Held to the extreme left by signal "A" pressure. PRN fluid pressure is blocked by the manual valve.
- **Forward Clutch**: Drive fluid pressure from the manual valve is directed through the case, pump housing and the turbine shaft into the forward clutch housing which applies the forward clutch, this shifts the transmission into first gear.

MH0203-4L80-E

Figure 33 D4 First Gear

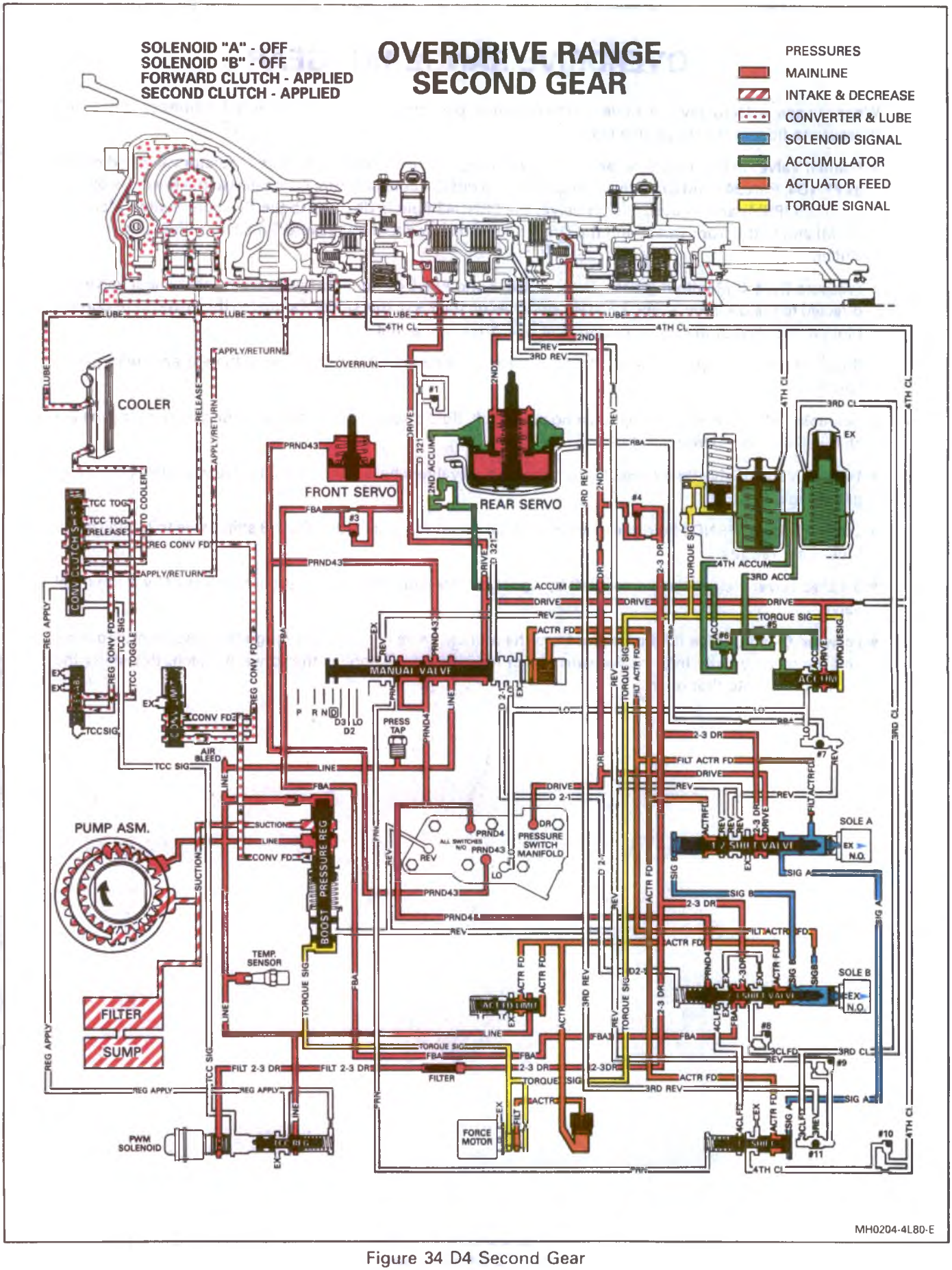

Figure 34 D4 Second Gear

OVERDRIVE RANGE 2nd. GEAR

To obtain second gear, the Powertrain Control Module (PCM) receives input signals from the Vehicle Speed Sensor (VSS), Throttle Position Sensor (TPS) and other engine sensors, to determine when to "de-energize" solenoid "B".

- **Manual Valve**: In the overdrive range second gear, line pressure from the pressure regulator valve is directed as PRND4, PRND43 and Drive fluid pressures. The PRND4 fluid pressure is directed to the Pressure Switch Manifold (PSM) and to the 2-3 shift valve, the PRND43 fluid pressure is directed to the Pressure Switch Manifold (PSM) and to the front servo, and the Drive fluid pressure is directed to the Pressure Switch Manifold (PSM) and forward clutch.
- **Pressure Switch Manifold (PSM)**: Drive, PRND and PRND43 fluid pressures from the manual valve are directed to the DR, PRND4 and PRND43 switches on the PSM, this sends a signal to the Powertrain Control Module (PCM) that the transmission is in overdrive range.
- **Solenoid "A"**: Deenergized, exhausting signal "A" fluid thru the solenoid allowing spring force to move the 1-2 shift valve to the extreme right.
- **Solenoid "B"**: Deenergized, exhausting signal "B" fluid thru the solenoid, thus the 2-3 shift valve is held to the extreme right by spring force and D2-1 fluid pressure from the manual valve.
- **1-2 Shift Valve**: Is held to the extreme right by spring force. Drive fluid pressure from the manual valve is changed into 2-3 drive fluid pressure at the 1-2 shift valve, this pressure is directed to the 2-3 shift valve, PWM solenoid and the second clutch.
- **2-3 Shift Valve**: Is held to the extreme right by spring force. 2-3 drive fluid pressure from the 1-2 shift valve is changed into Front Band Apply (FBA) and directed to the front servo. PRND4 fluid pressure from the manual valve is held at the 2-3 shift valve to be utilized in other gear ranges.
- **3-4 Shift Valve**: Held to the extreme right by spring force.
- **Forward Clutch**: Is applied by Drive fluid pressure from the manual valve.
- **Second Clutch**: Is applied by 2nd fluid pressure from the 1-2 shift valve. 2-3 drive fluid pressure from the 1-2 shift valve seats the #4 checkball and causes the fluid to flow through two orifices (which then becomes 2nd apply fluid pressure) into the second clutch housing which applies the second clutch.

MH0205-4L80-E

Figure 35 D4 Second Gear

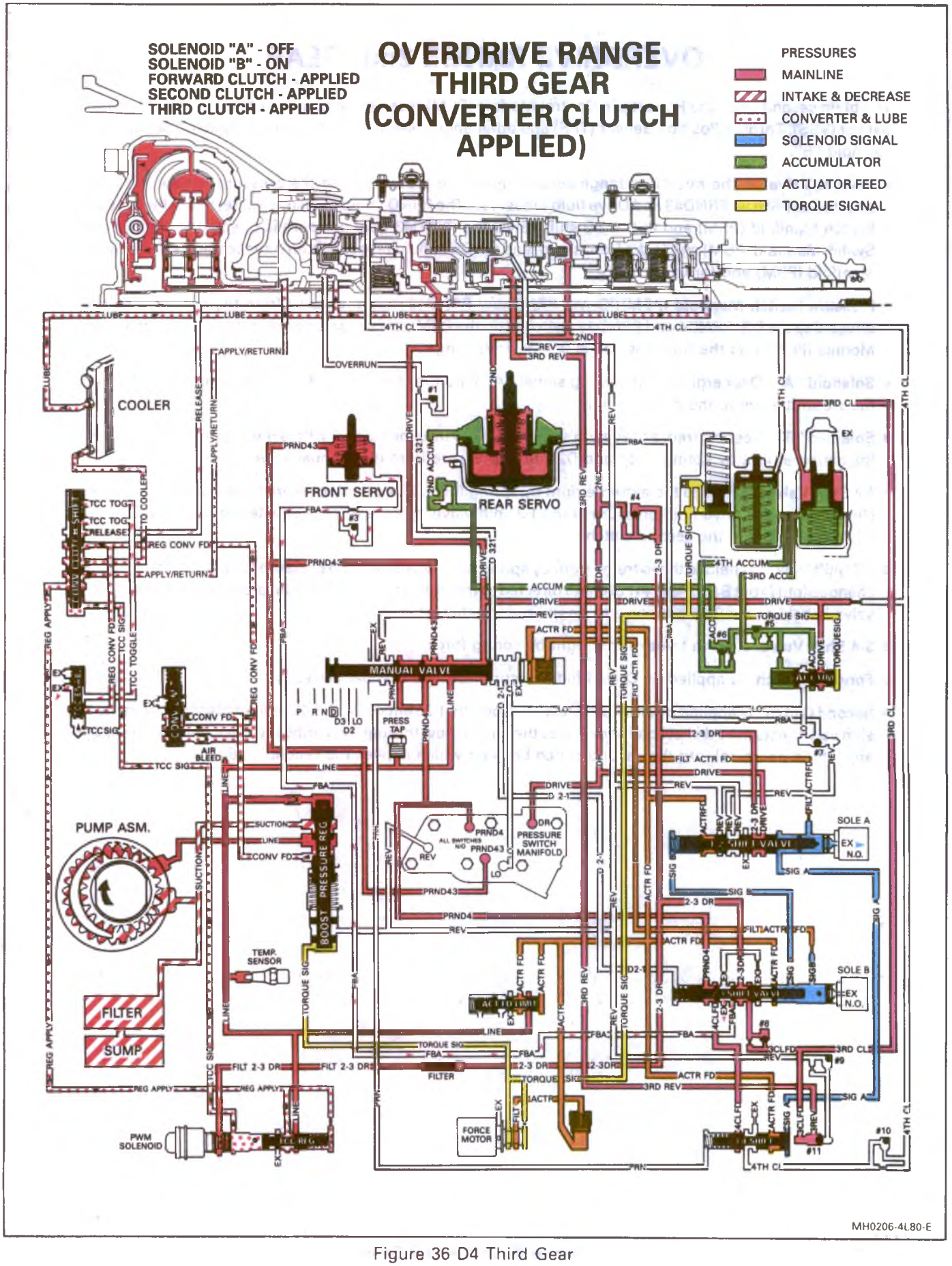

Figure 36 D4 Third Gear

OVERDRIVE RANGE 3rd. GEAR (CONVERTER CLUTCH APPLIED)

To obtain third gear, the Powertrain Control Module (PCM) receives input signals from the Vehicle Speed Sensor (VSS), Throttle Position Sensor (TPS) and other engine sensors, to determine when to "energize" solenoid "B".

- **Manual Valve**: In the overdrive range third gear, line pressure from the pressure regulator valve is directed as PRND4, PRND43 and Drive fluid pressures. The PRND4 fluid pressure is directed to the Pressure Switch Manifold (PSM) and to the 2-3 shift valve, the PRND43 fluid is directed to the Pressure Switch Manifold (PSM) and to the front servo, and the drive fluid is directed to the Pressure Switch manifold and forward clutch.
- **Pressure Switch Manifold (PSM)**: Drive, PRND4 and PRND43 fluid pressures from the manual valve are directed to the DR, PRND4 and PRND43 switches on the PSM, this sends a signal to the Powertrain Control Module (PCM) that the transmission is in overdrive range.
- **Solenoid "A"**: De-energized, exausting signal "A" pressure thru the solenoid allowing spring force to move the 3-4 shift valve to the extreme right.
- **Solenoid "B"**: Energized, the signal "B" pressure with spring force holds the 1-2 shift valve to the extreme right.
- **1-2 Shift Valve**: Held to the extreme right by signal "B" fluid pressure and spring force. Drive fluid pressure from the manual valve is changed into 2-3 drive fluid pressure at the 1-2 shift valve, this pressure is directed to the 2-3 shift valve, Pulse Width Motor (PWM) solenoid and the second clutch.
- **2-3 Shift Valve**: PRND4 fluid pressure from the manual valve is directed through the 2-3 shift valve (which turns into 4CLFD fluid pressure) to the 3-4 shift valve. 2-3DR fluid pressure from the 1-2 shift valve is changed into 3CLFD fluid pressure at the 2-3 shift valve, this fluid is directed to the #8 checkball which seats and forces the fluid through and orifice (where it becomes 3RD CL fluid pressure) and is directed to the third accumulator. 3CLFD fluid pressure is also directed to the #11 checkball which seats and forces the fluid through an orifice (which changes into 3RD REV fluid pressure) and to the direct clutch.
- **3-4 Shift Valve**: 4CLFD fluid pressure is blocked at the 3-4 shift valve to be utilized in overdrive range fourth gear.
- **Forward Clutch**: Is applied by drive fluid pressure from the manual valve.
- **Second Clutch**: Is applied by 2ND fluid pressure from the 1-2 shift valve. 2-3 drive fluid pressure from the 1-2 shift valve seats the #4 checkball in the case and causes the fluid to flow through two orifices (which then becomes 2ND apply fluid pressure) into the intermediate clutch housing which applies the intermediate clutch.
- **Direct Clutch**: Third reverse pressure from the #11 checkball flows through the case and into the center support to apply the inner piston area of the direct clutch.
- **Third Clutch Accumulator**: 3RD CL fluid pressure is also applied to the third clutch accumulator which is encased in the accumulator housing. This moves the third accumulator piston against the spring force and accumulator fluid pressure.
- **Pulse Width Modulation (PWM) Solenoid**: When energized by the Powertrain Control Module (PCM) signal pressure shifts the Converter Clutch Shift valve, thus the Torque Converter Clutch (TCC) is applied. The signal pressure also acts on the Torque Converter Clutch Regulator Valve which regulates output pressure to control the apply and release of the Torque Converter Clutch (TCC).

MH0207-4L80-E

Figure 37 D4 Third Gear

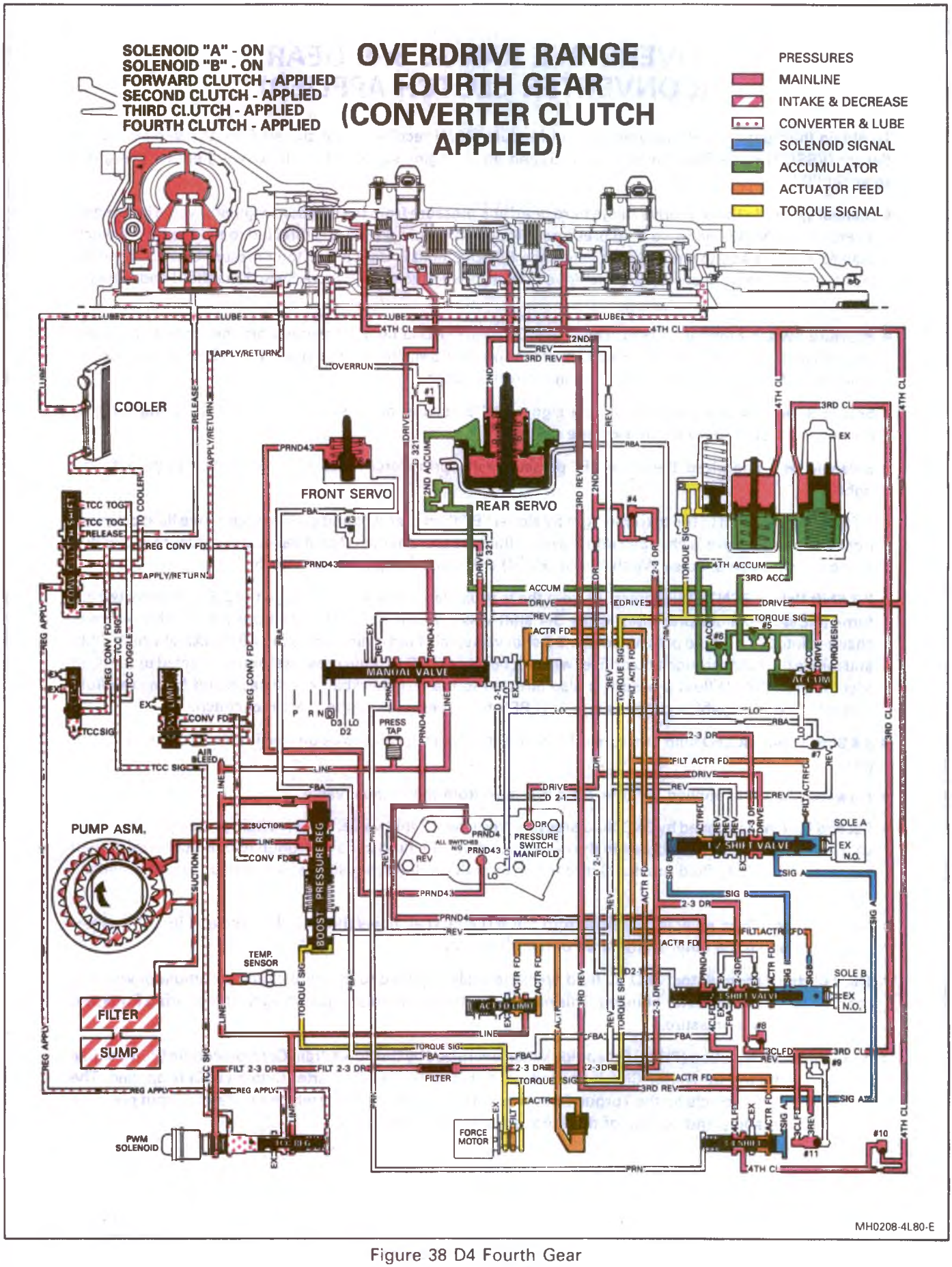

Figure 38 D4 Fourth Gear

OVERDRIVE RANGE 4TH. GEAR (CONVERTER CLUTCH APPLIED)

To obtain fourth gear, the Powertrain Control Module (PCM) receives input signals from the Vehicle Speed Sensor (VSS), Throttle Position Sensor (TPS) and other engine sensors, to determine when to "energize" solenoid "A".

- **Manual Valve:** In the overdrive range fourth gear, line pressure from the pressure regulator valve is turned into PRND4, PRND43 and Drive fluid pressures. The PRND4 fluid pressure is directed to the Pressure Switch Manifold (PSM) and to the 2-3 shift valve, the PRND43 fluid is directed to the Pressure Switch Manifold (PSM) and to the front servo, and the drive fluid is directed to the Pressure Switch manifold (PSM) and forward clutch.
- **Pressure Switch Manifold (PSM):** Drive, PRND4 and PRND43 fluid pressures from the manual valve are directed to the DR, PRND4 and PRND43 switches on the PSM, this sends a signal to the Powertrain Control Module (PCM) that the transmission is in overdrive range.
- **Solenoid "A":** Energized, the signal "A" pressure forces the 3-4 against the spring force to move the 3-4 shift valve to the extreme left.
- **Solenoid "B":** Energized, the signal "B" fluid pressure with spring force holds the 1-2 shift valve to the extreme right.
- **1-2 Shift Valve:** Held to the extreme right by signal "B" fluid pressure and spring force. Drive fluid pressure from the manual valve is changed into 2-3 drive fluid pressure at the 1-2 shift valve, this pressure is directed to the 2-3 shift valve, Pulse Width Motor (PWM) solenoid and the second clutch.
- **2-3 Shift Valve:** PRND4 fluid pressure from the manual valve is directed through the 2-3 shift valve (which turns into 4CLFD fluid pressure) to the 3-4 shift valve. 2-3DR fluid pressure from the 1-2 shift valve is changed into 3CLFD fluid pressure at the 2-3 shift valve, this fluid is directed to the #8 checkball which seats and forces the fluid through and orifice (where it becomes 3RD CL fluid pressure) and is directed to the third accumulator. 3CLFD fluid pressure is also directed to the #11 checkball which seats and forces the fluid through an orifice (which changes into 3RD REV fluid pressure) and to the direct clutch.
- **3-4 Shift Valve:** Is held to the extreme left by signal "A" fluid pressure. 4CLFD from the 2-3 shift valve is changed to 4TH CL fluid pressure at the 3-4 shift valve, 4TH CL fluid is directed to the #10 checkball which seats and forces the fluid through an orifice to apply the fourth clutch and fourth clutch accumulator.
- **Rear Servo:** 2ND fluid pressure is supplied to the rear servo in the same manner as it is to the 2ND clutch. This fluid pressure is directed to the inner piston of the rear servo, thus applying the inner piston.
- **Forward Clutch:** Is applied by drive fluid pressure from the manual valve.
- **Direct Clutch:** Third reverse pressure from the #11 checkball flows through the case and into the center support to apply the inner piston area of the direct clutch.
- **Second Clutch:** Is applied by 2ND fluid pressure from the 1-2 shift valve. 2-3 drive fluid pressure from the 1-2 shift valve seats the #4 checkball in the case and causes the fluid to flow through two orifices (which then becomes 2ND apply fluid pressure) into the second clutch housing which applies the second clutch.
- **Fourth Clutch:** Fourth clutch pressure leaves the 3-4 shift valve and seats the #10 checkball, and causes the fluid to flow through an orifice, through the case into the fourth clutch housing which applies the fourth clutch. After the fourth accumulator piston is at full travel, the transmission shifts into fourth gear.
- **Third Clutch Accumulator:** 3RD CL fluid pressure is also applied to the third clutch accumulator which is encased in the accumulator housing. This moves the third accumulator piston against the spring force and accumulator fluid pressure.
- **Fourth Clutch Accumulator:** Fourth clutch pressure is also supplied to the fouth clutch accumulator which is encased in the accumulator housing, this moves the fourth accumulator piston against the spring and accumulator pressure which smooths the 3-4 shift.
- **Pulse Width Modulation (PWM) Solenoid:** When energized by the Powertrain Control Module (PCM) signal pressure shifts the Converter Clutch Shift valve, thus the Torque Converter Clutch (TCC) is applied. The signal pressure also acts on the Torque Converter Clutch Regulator valve (TCCR) which regulates output pressure to control the apply and release of the Torque Converter Clutch (TCC).

MH0209-4L80-E

Figure 39 D4 Fourth Gear

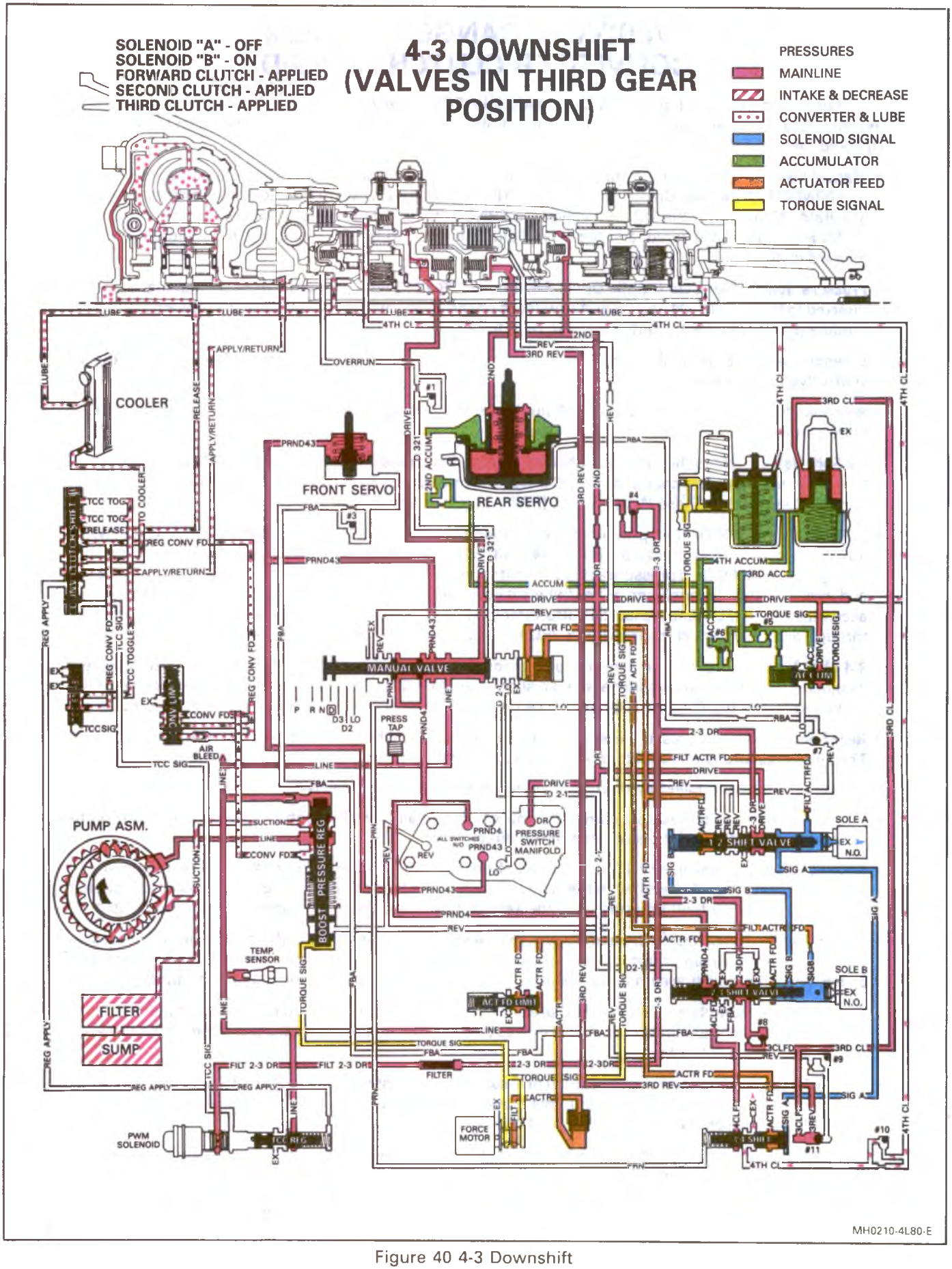

Figure 40 4-3 Downshift

4-3 DOWNSHIFT (VALVES IN THIRD GEAR POSITION)

To obtain the 4-3 downshift, the Powertrain Control Module (PCM) receives an input signal from the Throttle Position Sensor (TPS) at increased throttle openings which causes it to de-energize solenoid "A".

- **Solenoid "A"**: De-energized, signal "A" fluid exhausts at the solenoid which allows spring force to move the 3-4 shift valve to the extreme right.
- **3-4 shift valve**: The fourth clutch apply pressure is shut off and a port is opened at the valve to exhaust fourth clutch fluid leaving the fourth clutch and fourth clutch accumulator. This causes the fourth clutch to release which shifts the transmission into third gear.
- **Fourth Clutch**: Exhausting fourth clutch fluid unseats the #10 checkball which allows for a rapid exhausting of the fourth clutch apply fluid at the 3-4 shift valve.
- **Fourth Clutch Accumulator**: Exhausting fourth clutch accumulator fluid also exhausts through the unseated #10 check valve and exhausts at the 3-4 shift valve.

MH0211-4L80-E

Figure 41 4-3 Downshift

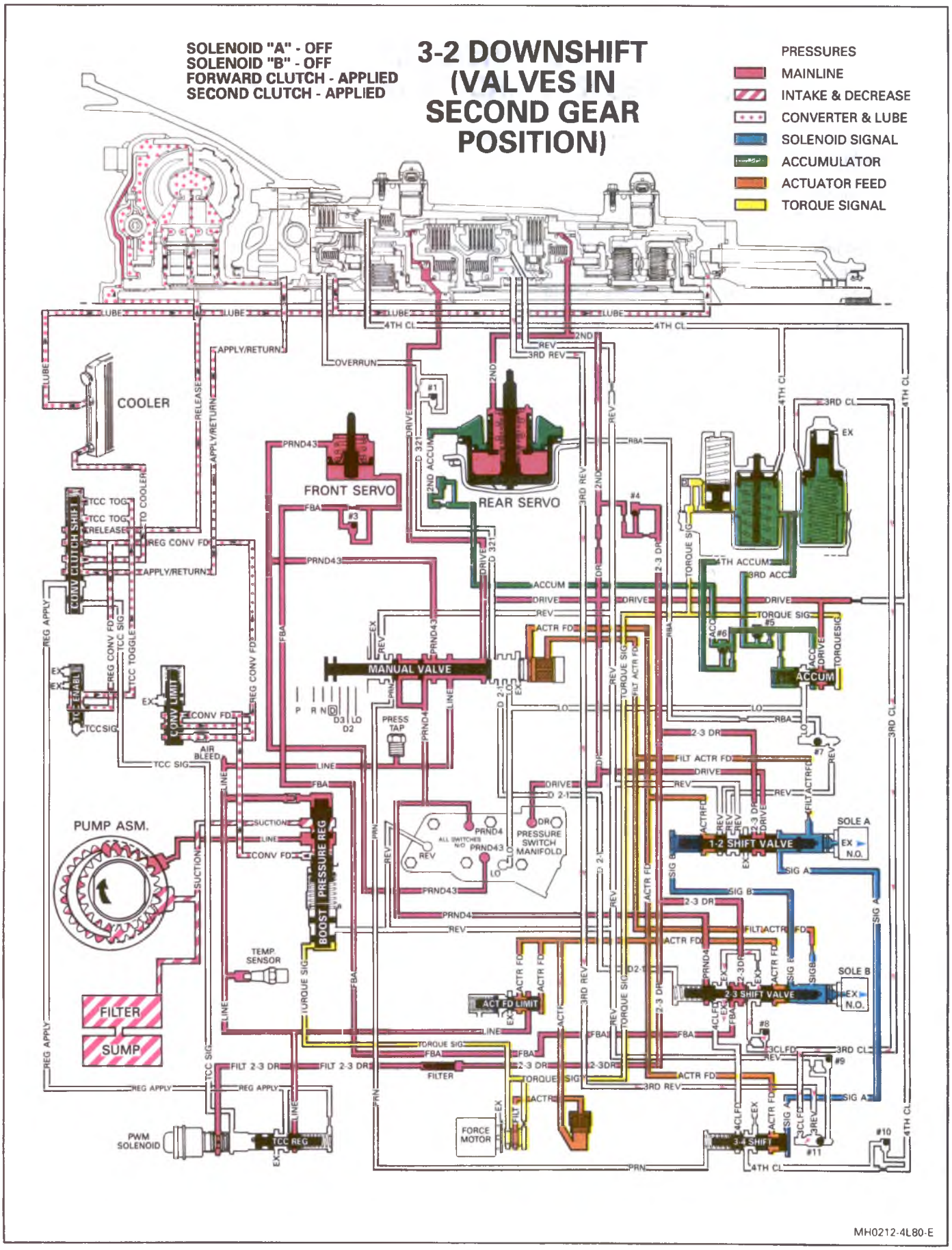

Figure 42 3-2 Downshift

3-2 DOWNSHIFT (VALVES IN SECOND GEAR)

To obtain the 3-2 downshift, the Powertrain Control Module (PCM) receives an input signal from the Throttle Position Sensor (TPS) at increased throttle openings which causes it to de-energize solenoid "B".

- **Solenoid "A"**: De-energized, spring force holds 1-2 shift valve to extreme right.
- **Solenoid "B"**: De-energized, signal "B" pressure exhausts at the solenoid which allows spring force to move the 2-3 shift valve to the extreme right.
- **2-3 shift valve**: The third clutch feed pressure from the 2-3 shift valve is shut off and an exhaust port is opened at the 2-3 shift valve to exhaust third clutch fluid leaving the third clutch accumulator. This causes the direct clutch to release which shifts the transmission into second gear.
- **Direct Clutch**: Exhausting third clutch fluid seats the #11 checkball and unseats the #8 checkball which allows for a rapid exhausting of the third clutch apply fluid at the 2-3 shift valve.
- **Third clutch accumulator**: Exhausting third clutch accumulator fluid also exhausts through the unseated #8 check valve and exhausts at the 2-3 shift valve.

MH0213-4L80-E

Figure 43 3-2 Downshift

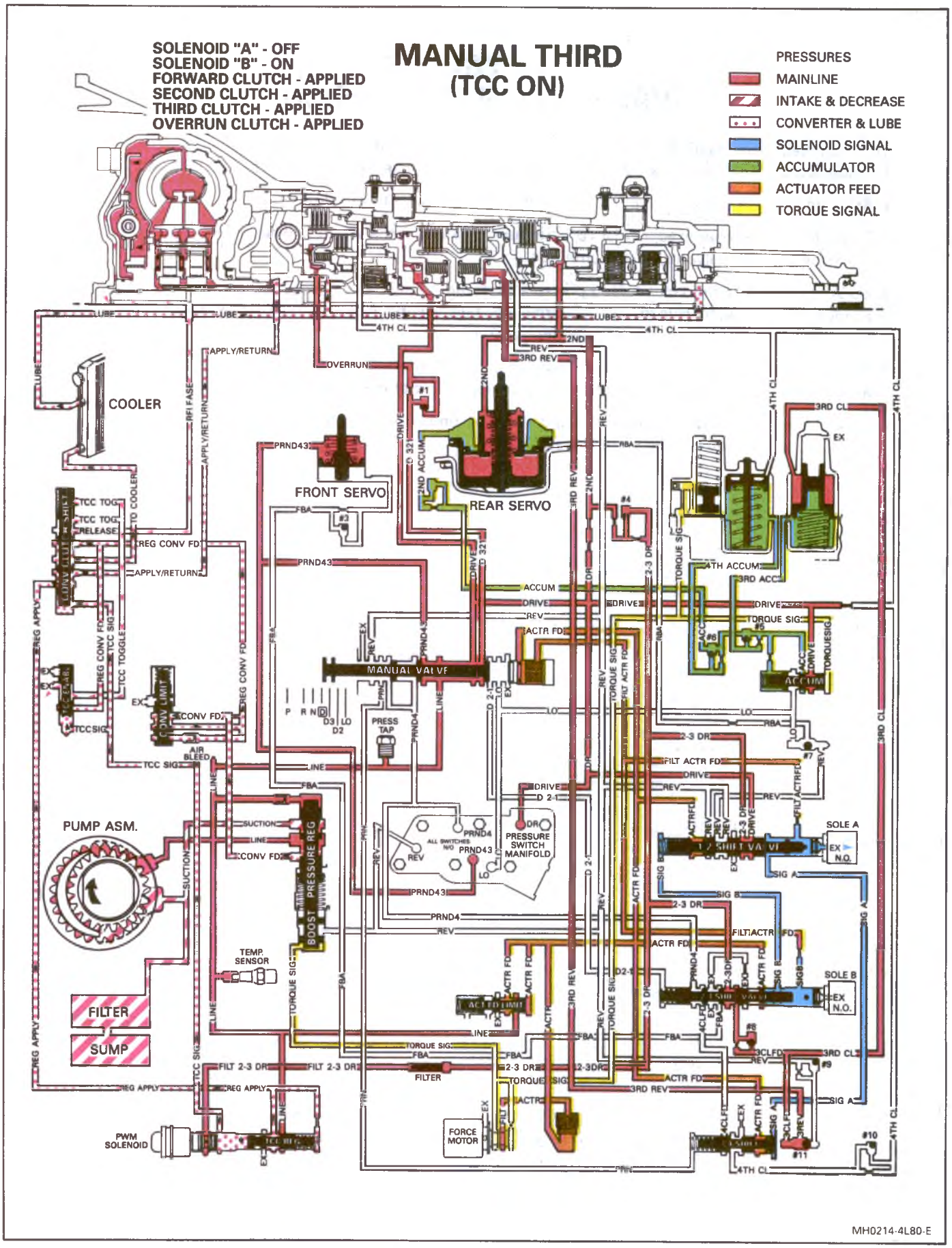

Figure 44 Manual Third

MANUAL THIRD (TCC ON)

Manual 3rd can be used to increase the performance of the vehicle by allowing higher engine RPM's for more torque. Manual third will also provide vehicle engine compression braking when decending slight grades. Manual third can be selected at any vehicle speed. The transmission will downshift into third gear at a specified vehicle speed according to vehicle application.

- **Manual Valve**: In Manual Third range, line pressure from the Pressure Regulator Valve is converted into PRND43, Drive and D 321 pressures. The PRND43 pressure is directed to the pressure switch manifold and front servo, the Drive fluid pressure is directed to the forward clutch, and the D 321 fluid pressure is directed to the #1 checkball and overrun clutch.
- **Pressure Switch Manifold**: PRND43 and Drive fluid pressure from the manual valve is directed to the PRND43 switch and DR switch on the PSM, this sends a signal to the Powertrain Control Module (PCM) that the transmission is in manual third.
- **Solenoid "A"**: Deenergized, exhausting signal "A" pressure thru the solenoid allowing spring pressure to move the 3-4 shift valve to the extreme right.
- **Solenoid "B"**: Energized, the signal "B" fluid pressure moves the 2-3 shift valve against the spring force to the extreme left.
- **1-2 Shift Valve**: Held to the extreme right by signal "B" fluid and spring pressure. Drive fluid pressure from the manual valve is changed into 2-3 drive fluid pressure at the 1-2 shift valve, this pressure is directed to the 2-3 shift valve, Pulse Width Motor (PWM) solenoid and the second clutch.
- **2-3 Shift Valve**: 2-3 fluid pressure from the 1-2 shift valve is changed into 3CLFD fluid pressure at the 2-3 shift valve, this fluid is directed to the #8 checkball which seats and forces the fluid through an orifice (where it becomes 3RD CL fluid pressure) and is directed to the third accumulator. 3CLFD fluid pressure is also directed to the #11 checkball which seats and forces the fluid through an orifice (which changes into 3RD REV fluid pressure) and to the third clutch.
- **Rear Servo**: 2nd fluid pressure is supplied to the rear servo in the same manner as it is to the 2nd clutch. This fluid pressure is directed to the inner piston of the rear servo, thus applying the inner piston.
- **Front Servo**: PRND43 fluid pressure from the manual valve is directed to the front servo which assists the spring with holding the front servo off.
- **Overrun Clutch**: D 321 fluid pressure from the manual valve seats the #1 checkball in the case and causes the fluid to flow through an orifice (which becomes Overrun fluid pressure) through the case, pump housing and into the overrun clutch housing which applies the overrun clutch. Thus the overdrive roller clutch becomes ineffective and provides vehicle engine compression braking.
- **Forward Clutch**: Is applied by drive fluid pressure from the manual valve.
- **Direct Clutch**: Third reverse pressure from the #11 checkball flows through the case and into the center support to apply the inner piston area of the direct clutch. After the third accumulator piston is at full travel, the transmission shifts into third gear.
- **Second Clutch**: Is applied by 2nd fluid pressure from the 1-2 shift valve. 2-3 drive fluid pressure from the 1-2 shift valve seats the #4 checkball in the case and causes the fluid to flow through two orifices (which then becomes 2nd apply fluid pressure) into the second clutch housing which applies the second clutch.
- **Third Clutch Accumulator**: Third clutch pressure is also applied to the third clutch accumulator which is encased in the accumulator housing. This moves the third accumulator piston against the spring force and accumulator pressure which smooths the 2-3 shift.
- **Pulse Width Modulation (PWM) Solenoid**: When energized by the Powertrain Control Module (PCM) signal pressure shifts the Converter Clutch Shift valve, thus the Torque Converter Clutch (TCC) is applied. The signal pressure also acts on the Torque Converter Clutch Regulator valve (TCCR) which regulates output pressure to control the apply and release of the Torque Converter Clutch (TCC).

MH0215-4L80-E

Figure 45 Manual Third

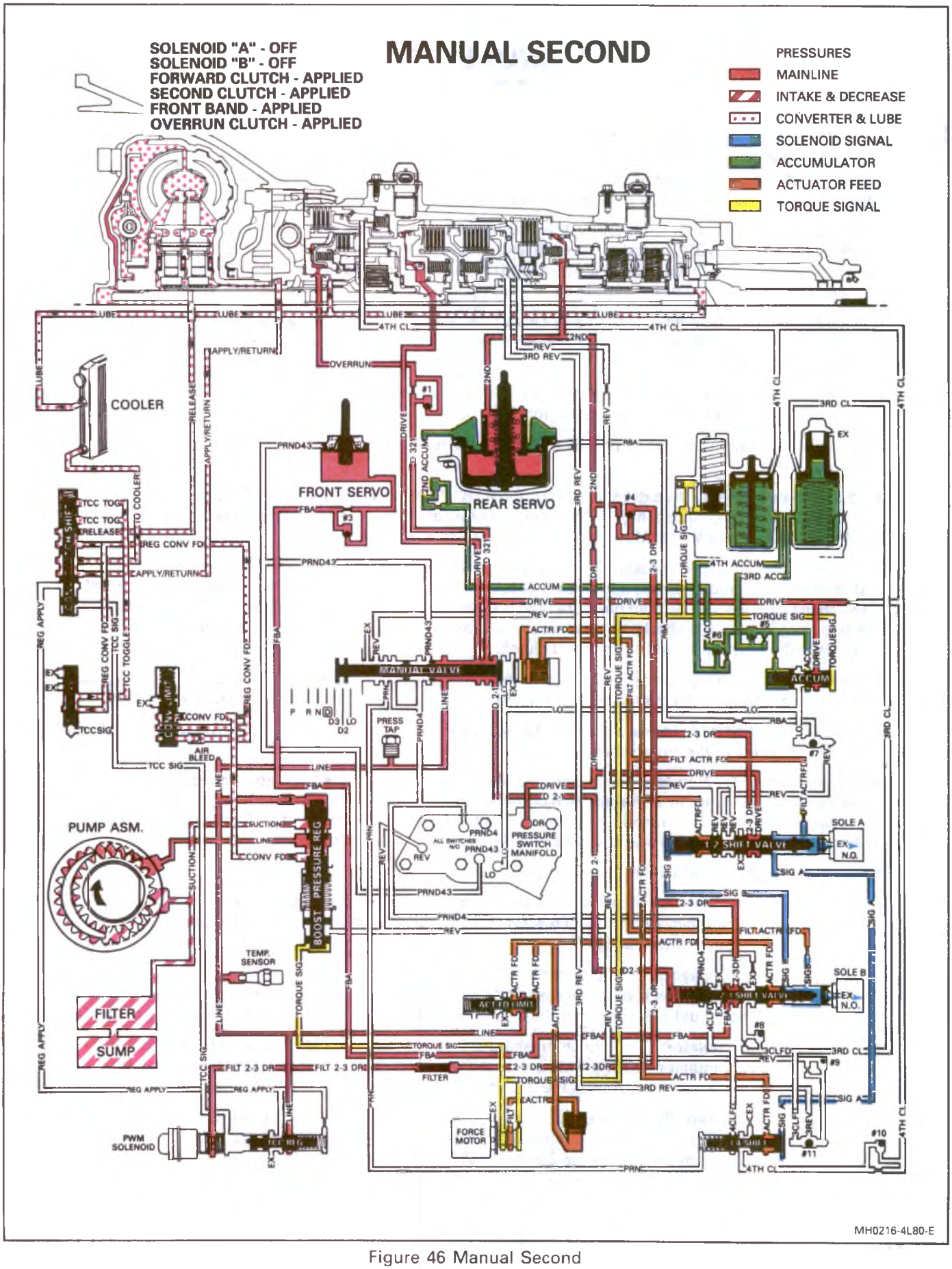

Figure 46 Manual Second

MANUAL SECOND

A Manual 3-2 downshift can be used to provide increased engine braking over manual third. This is done by moving the shift selector from the manual third position to the manual second position. Manual second can be selected at any vehicle speed or from any gear range and the transmission will downshift into second gear.

- **Manual Valve**: In the manual second range, line pressure which turns into D 2-1 is directed to the 2-3 shift valve. The manual valve shuts off PRND4 fluid pressure to the pressure Switch manifold (PSM) and PRND43 fluid pressure to the front servo spring assist. This allows the front band to apply.
- **Pressure Switch Manifold**: PRND43 pressure is shut off from the manual valve. This shuts off the electrical signal to the Powertrain Control Module (PCM).
- **Solenoid "A"**: Deenergized, exhausting signal "A" pressure thru the solenoid allowing spring force to move the 1-2 shift valve to the extreme right.
- **Solenoid "B"**: Deenergizes, exhausting signal "B" pressure thru the solenoid, thus the 2-3 shift valve is forced to the extreme right by spring force and D2-1 fluid pressure from the manual valve.
- **1-2 Shift Valve**: Is held to the extreme right by spring force. Drive fluid pressure from the manual valve is changed into 2-3 drive fluid pressure at the 1-2 shift valve, this pressure is directed to the 2-3 shift valve, PWM solenoid and the second clutch.
- **2-3 Shift Valve**: Is held to the extreme right by spring pressure and D2-1 fluid pressure from the manual valve. 2-3 drive pressure from the 1-2 shift valve is changed into Front Band Apply (FBA) and directed to the front servo.
- **3-4 Shift Valve**: Held to the extreme right by spring force.
- **Front Servo**: Front Band Apply (FBA) fluid pressure leaves the 2-3 shift valve and seats the #3 checkball, this causes the fluid to flow through an orifice, into the front servo piston housing which applies the front servo and band.
- **Forward Clutch**: Is applied by drive fluid pressure from the manual valve.
- **Second Clutch**: Is applied by 2nd fluid pressure from the 1-2 shift valve. 2-3 drive fluid pressure from the 1-2 shift valve seats the #4 checkball in the case? and causes the fluid to flow through two orifices (which then becomes 2nd apply fluid pressure) into the second clutch housing which applies the second clutch.
- **Overrun Clutch**: D 321 fluid pressure from the manual valve seats the #1 checkball in the case and causes the fluid to flow through an orifice (Which becomes Overrun fluid pressure) through the case, pump housing and into the overrun clutch housing which applies the overrun clutch. Thus the overdrive roller clutch becomes ineffective and provides vehicle engine compression braking.

MH0217-4L80-E

Figure 47 Manual Second

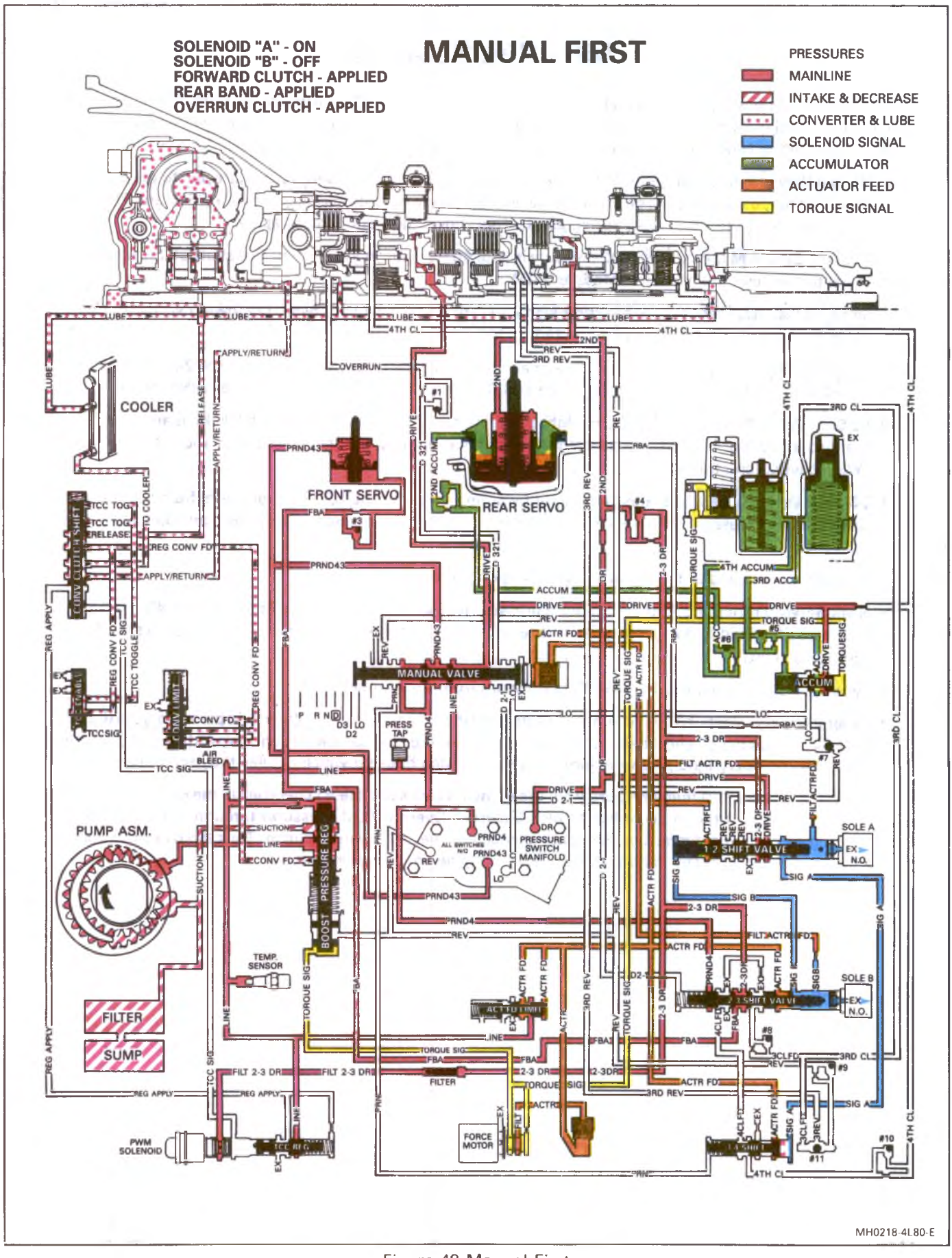

Figure 48 Manual First

MANUAL FIRST

Manual first can be used for maximum engine braking when descending steep grades. Manual first can be selected at any vehicle speed. However, the transmission will not downshift until the vehicle is at a specified speed according to vehicle application.

- **Manual Valve:** In the manual first range, line pressure from the pressure regulator valve is turned into drive, D 321, D2-1, and lo fluid pressures. The drive fluid pressure is directed to the forward clutch, the D321 fluid pressure is directed to the overrun clutch, D2-1 fluid pressure is directed to the 2-3 shift valve, and the lo fluid pressure is directed to the Pressure Switch Manifold (PSM) and rear servo.
- **Pressure Switch Manifold (PSM):** Lo fluid pressure from the manual valve is directed to the Lo pressure switch on the Pressure Switch Manifold (PSM), this sends a signal to the Powertrain Control Module (PCM) that the transmission is in manual lo. Drive fluid pressure is also supplied to the PCM as in all other gear ranges but reverse.
- **Solenoid "A":** Energized, signal "A" fluid pressure forces the 1-2 and the 3-4 shift valves to the extreme left.
- **Solenoid "B":** De-energized, exausting signal "B" fluid pressure through the solenoid.
- **1-2 Shift Valve:** Held to the extreme left by signal "A" fluid pressure. The actuator feed and drive pressures are blocked supplied to the 1-2 shift valve are blocked
- **2-3 Shift Valve:** Is held to the extreme right by spring pressure and D2-1 fluid pressure from the manual valve as in second gear.
- **3-4 Shift Valve:** Is forced to the extreme left by signal "A" pressure. All pressures are blocked at the 3-4 shift valve to be utilized in other gear ranges.
- **Rear Servo:** Lo fluid pressure from the manual valve is directed to the #7 checkball, this causes the fluid to flow through an orifice, (which then becomes Rear Band Apply fluid pressure (RBA) and into the rear servo apply housing which applies the rear band.
- **Forward Clutch:** Is applied by drive fluid pressure from the manual valve.
- **Overrun Clutch:** D321 fluid pressure from the manual valve seats the #1 checkball in the case and causes the fluid to flow through an orifice (which becomes overrun fluid pressure) through the case, pump housing and into the overrun clutch housing which applies the overrun clutch. Thus the overdrive roller clutch becomes ineffective and provides vehicle engine compression braking.

MH0219-4L80-E

Figure 49 Manual First

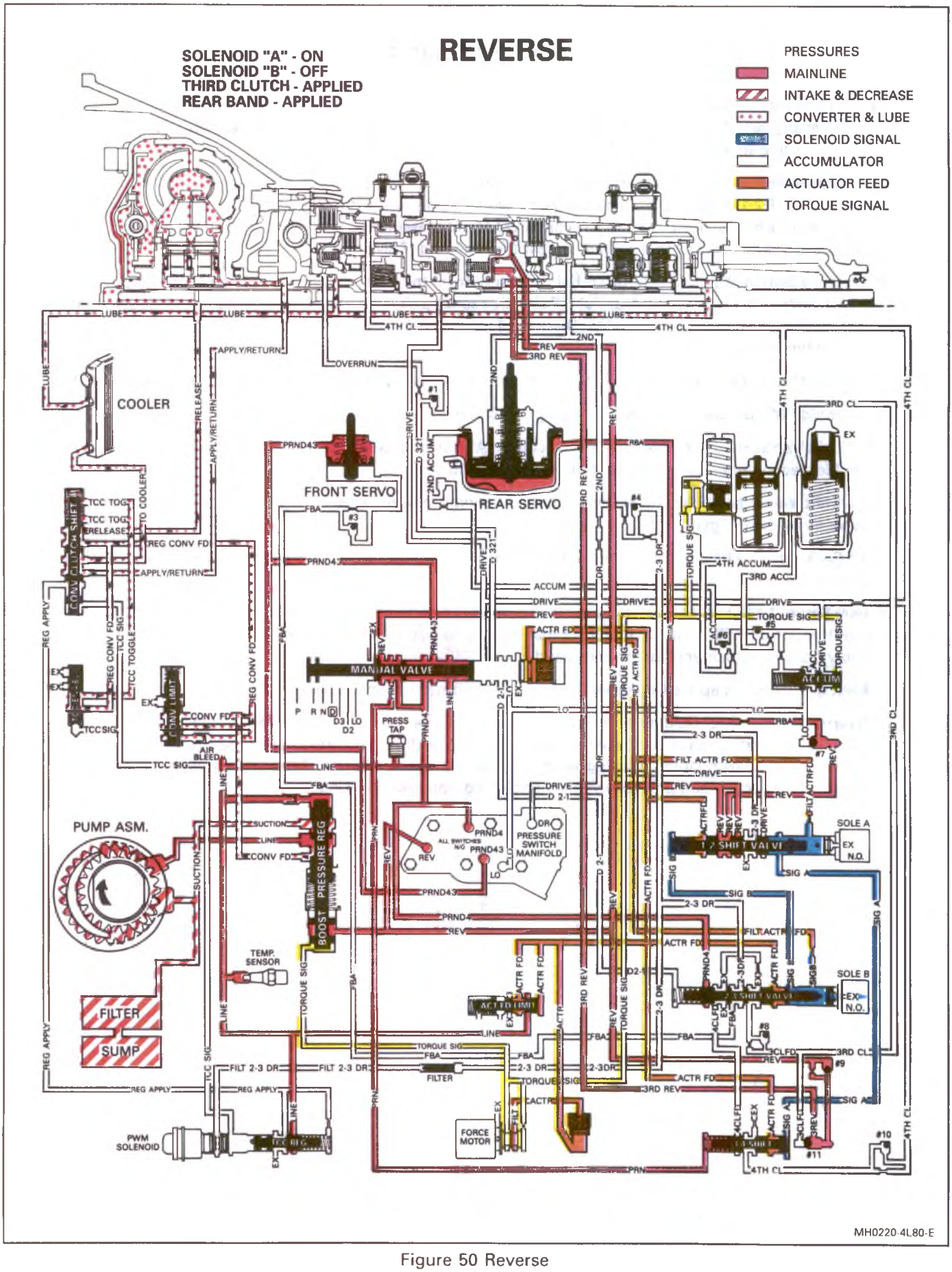

Figure 50 Reverse

REVERSE

When the gear selector lever is moved to the reverse position, the manual valve blocks line fluid pressure from entering the Drive, D 321, D 2-1, and lo fluid circuits. These fluids exhaust at the manual valve. The manual valve allows line fluid pressure to enter the REV, PRN, PRND43, and PRND4 hydraulic circuits.

- **Manual Valve:** In the reverse range, line pressure from the pressure regulator valve is directed as REV, PRN, PRND4, and and PRND43 fluid pressures at the manual valve. The REV fluid pressure is directed to the #9 checkball, Direct clutch, 1-2 shift valve, and the Pressure Regulator Boost Valve. The PRN fluid is directed to the 3-4 shift valve, the PRND4 fluid is directed to the Pressure Switch Manifold (PSM) and 2-3 shift valve, and the PRND43 fluid is directed to the Pressure Switch Manifold (PSM) and the front servo.
- **Pressure Switch Manifold (PSM):** REV, PRND4 and PRND43 fluid pressures from the manual valve are directed to the respective switches on the PSM, this sends a signal to the Powertrain Control Module (PCM) that the transmission is in reverse.
- **Solenoid "A":** Energized, signal "A" pressure forces the 1-2 shift valve to the extreme left.
- **Solenoid "B":** De-energized, exhausting signal "B" fluid through the solenoid.
- **1-2 Shift Valve:** Held to the extreme left by signal "A" fluid pressure. REV fluid pressure from the 1-2 shift valve is directed to and seats the #7 checkball, then to the rear servo which applies the rear band.
- **2-3 Shift Valve:** Is held to the extreme right by spring force. This blocks the PRND4 fluid pressure at the 2-3 shift valve which will be utilized in other gear ranges.
- **3-4 Shift Valve:** Is forced to the extreme right by PRN fluid pressure. All other pressures are blocked at the valve.
- **Rear Servo:** REV fluid pressure from the 1-2 shift valve is directed to and seats the #7 checkball, this causes the fluid to flow through an orifice, (which then becomes Rear Band Apply (RBA) fluid pressure) through the case into the rear servo which applies the rear band.
- **#9 and #11 Checkballs:** REV fluid pressure from the manual valve is directed to and seats the #9 checkball, this causes the fluid to flow through an orifice (which then becomes 3rd REV fluid pressure) and seats the #11 checkball, through another orifice and into the direct clutch.
- **Direct Clutch:** 3rd REV fluid pressure is directed through the case out the center support and into the direct clutch inner piston area, REV fluid pressure is directed to the direct clutch outer piston. The combination of these two pressures apply the direct clutch. Using both fluid pressures on an increased area of the piston increase the holding capacity of the clutch.

MH0221-4L80-E

Figure 51 Reverse

1 SUCTION
2 LINE
3 REGULATED APPLY
7 CONVERTER FEED
10 CONVERTER RELEASE
11 CONVERTER APPLY
12 COOLER
14 TORQUE SIGNAL
30 TCC SIGNAL
43 REVERSE
45 EXHAUST
47 VOID

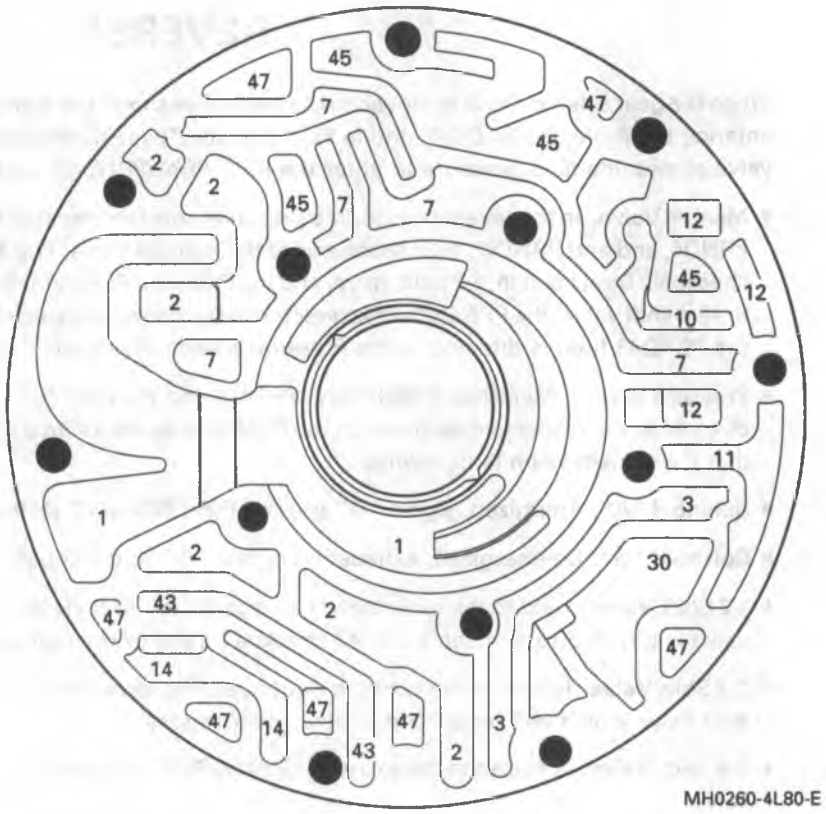

Figure 52 Pump Body Oil Passages

1 SUCTION
2 LINE
3 REGULATED APPLY
7 CONVERTER FEED
10 CONVERTER RELEASE
11 CONVERTER APPLY
12 COOLER
14 TORQUE SIGNAL
19 DRIVE
30 TCC SIGNAL
40 OVERRUN CLUTCH
43 REVERSE
45 EXHAUST
47 VOID

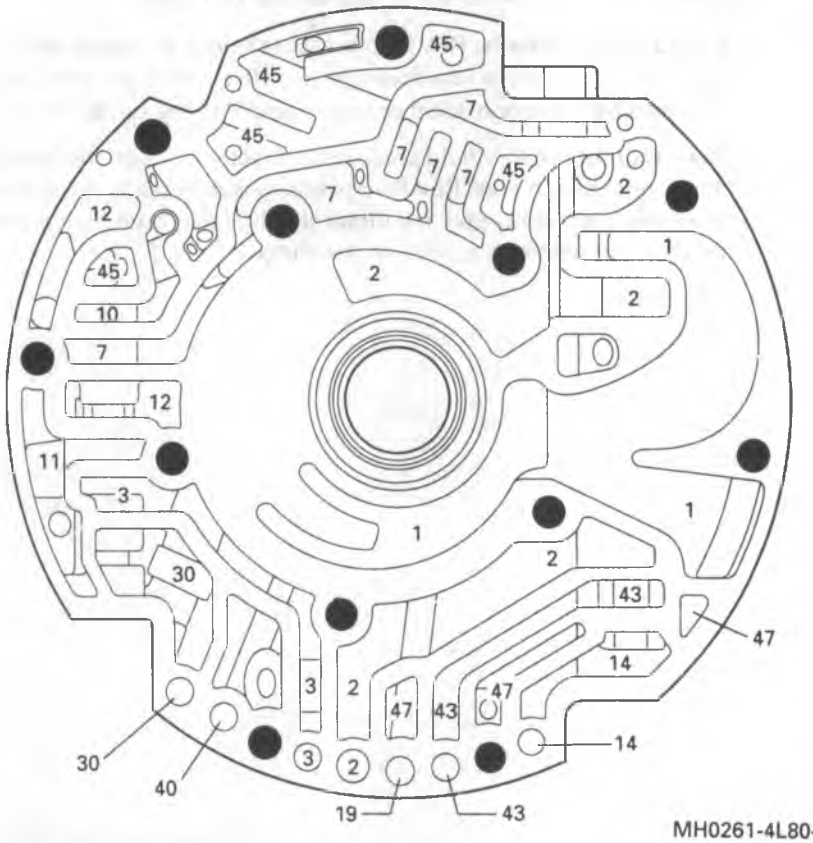

Figure 53 Pump Cover Oil Passages

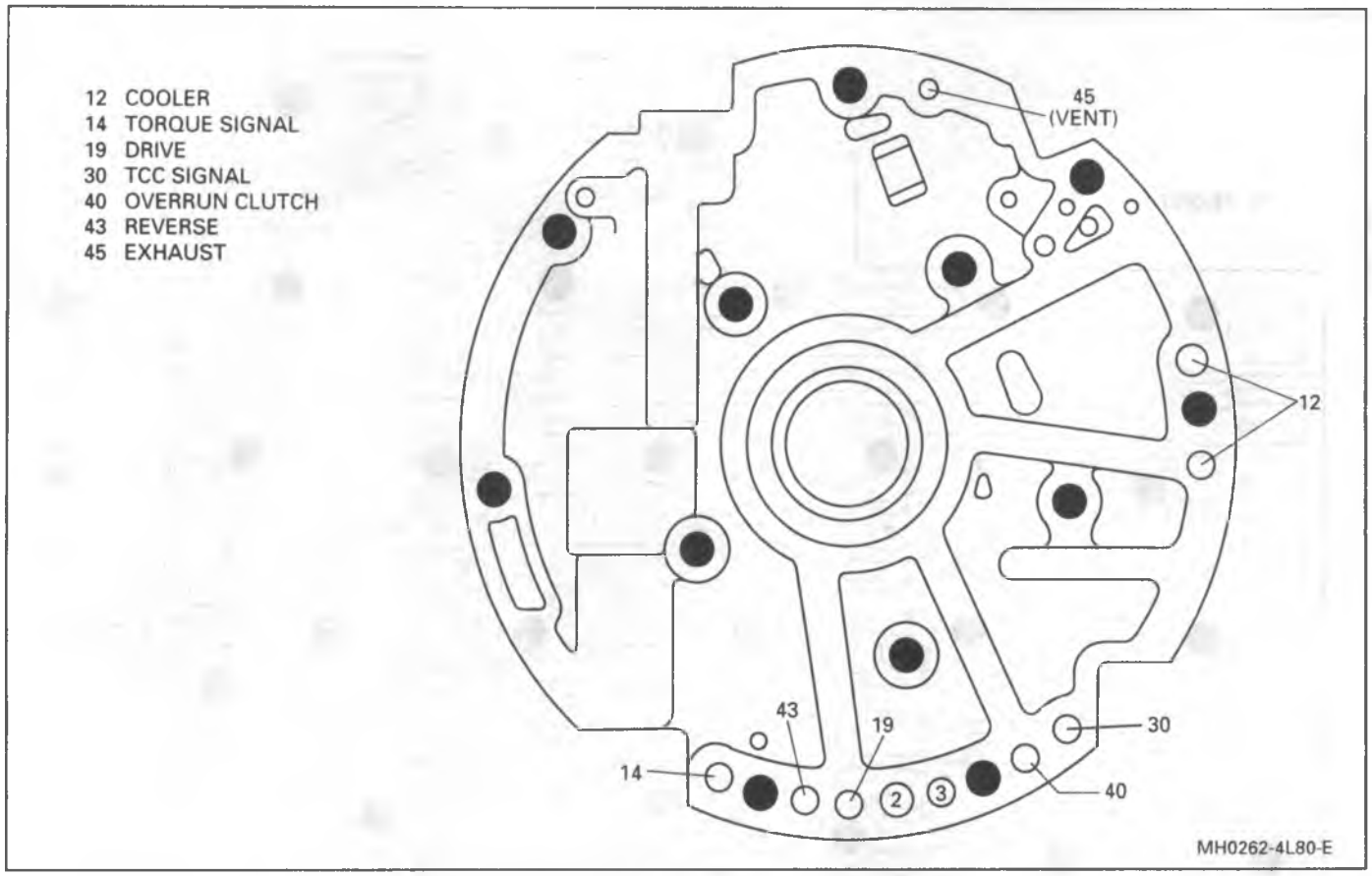

Figure 54 Pump Cover to Case Oil Passages

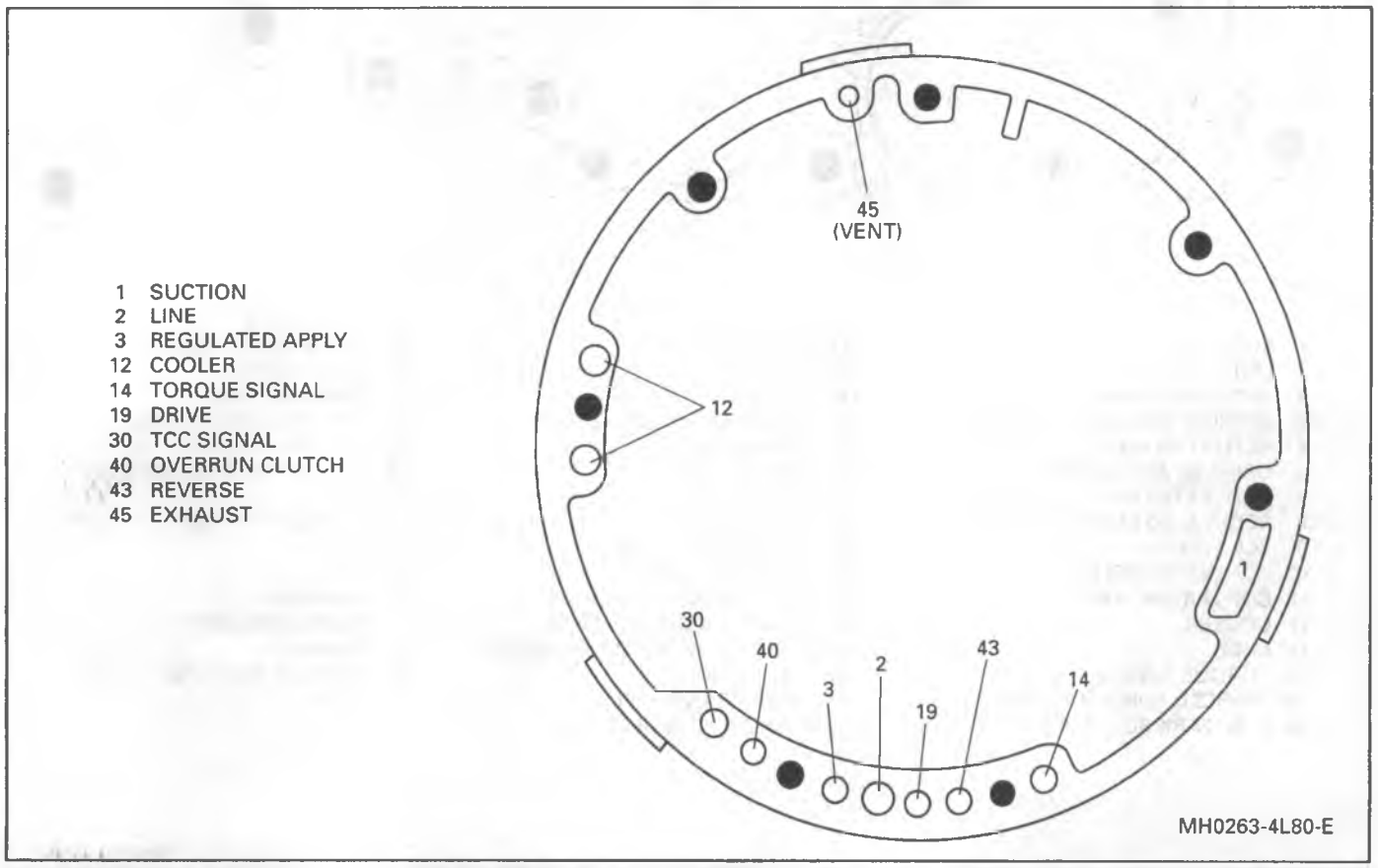

Figure 55 Case Oil Passages – Pump Attaching Surface

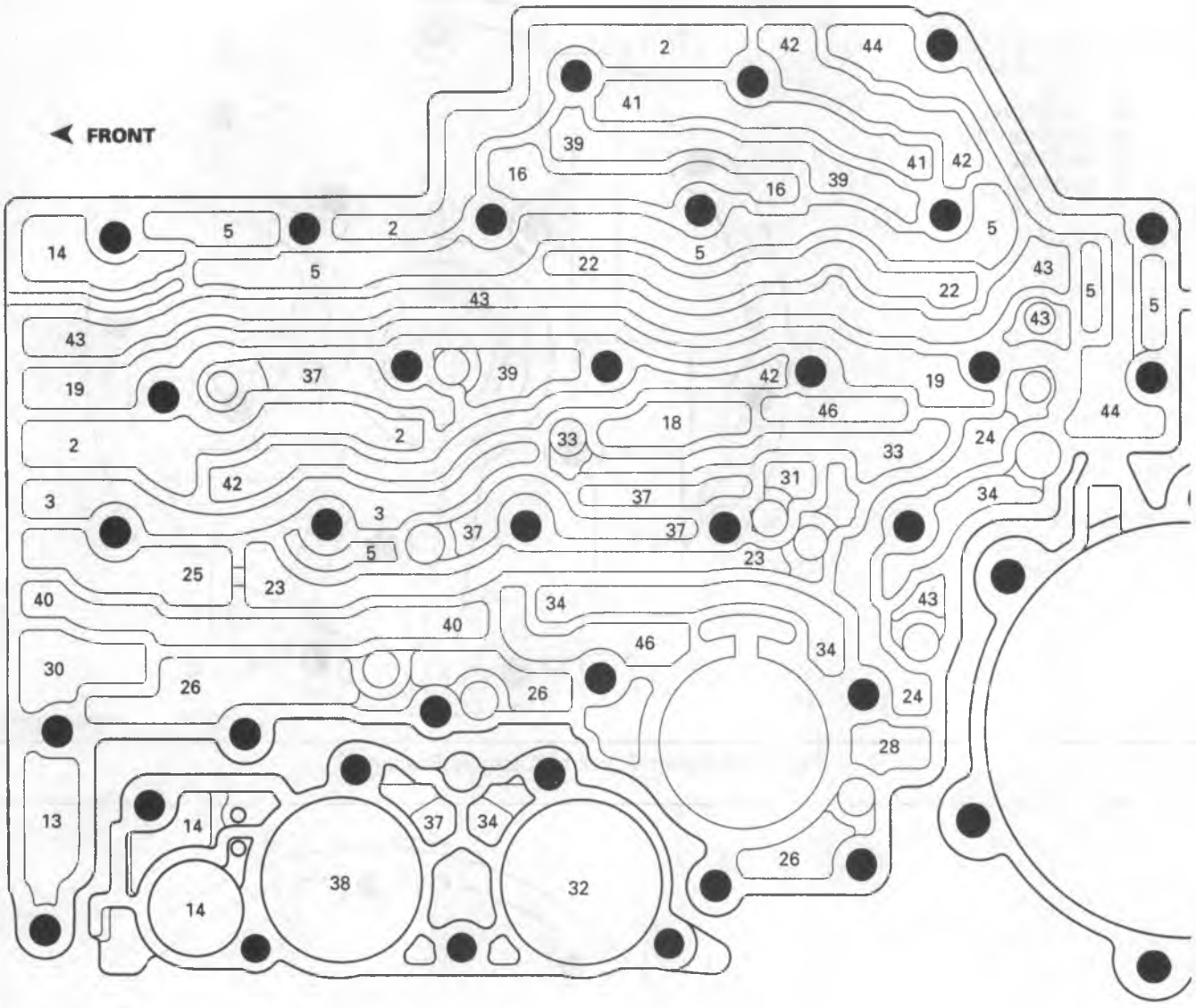

1 SUCTION
2 LINE
3 REGULATED APPLY
4 ORIFICED REGULATOR APPLY
5 ACTUATOR FEED
6 ORIFICED ACTUATOR FEED
7 CONVERTER FEED
8 REGULATED CONVERTER FEED
9 TCC TOGGLE
10 CONVERTER RELEASE
11 CONVERTER APPLY
12 COOLER
13 LUBE
14 TORQUE SIGNAL
15 ORIFICED TORQUE SIGNAL
16 PRN (PARK REVERSE NEUTRAL)
17 PRND 4-3
18 PRND 4
19 DRIVE
20 FILTERED ACTUATOR FEED
21 SIGNAL "A"
22 SIGNAL "B"
23 2-2 DRIVE
24 2ND CLUTCH
25 FILTERED 2-3 DRIVE
26 ACCUMULATOR
27 ORIFICED ACCUMULATOR
28 SECOND ACCUMULATOR
29 THIRD CLUTCH ACCUMULATOR
30 TCC SIGNAL
31 FRONT BAND APPLY
32 THIRD ACCUMULATOR
33 THIRD CLUTCH FEED
34 THIRD CLUTCH
35 THIRD / REVERSE
36 FOURTH CLUTCH FEED
37 FOURTH CLUTCH
38 FOURTH ACCUMULATOR
39 D 3-2-1
40 OVERRUN CLUTCH
41 D 2-1
42 LO
43 REVERSE
44 REAR BAND APPLY
45 EXHAUST
46 ORIFICED EXHAUST
47 VOID

Figure 56 Case Oil Passages

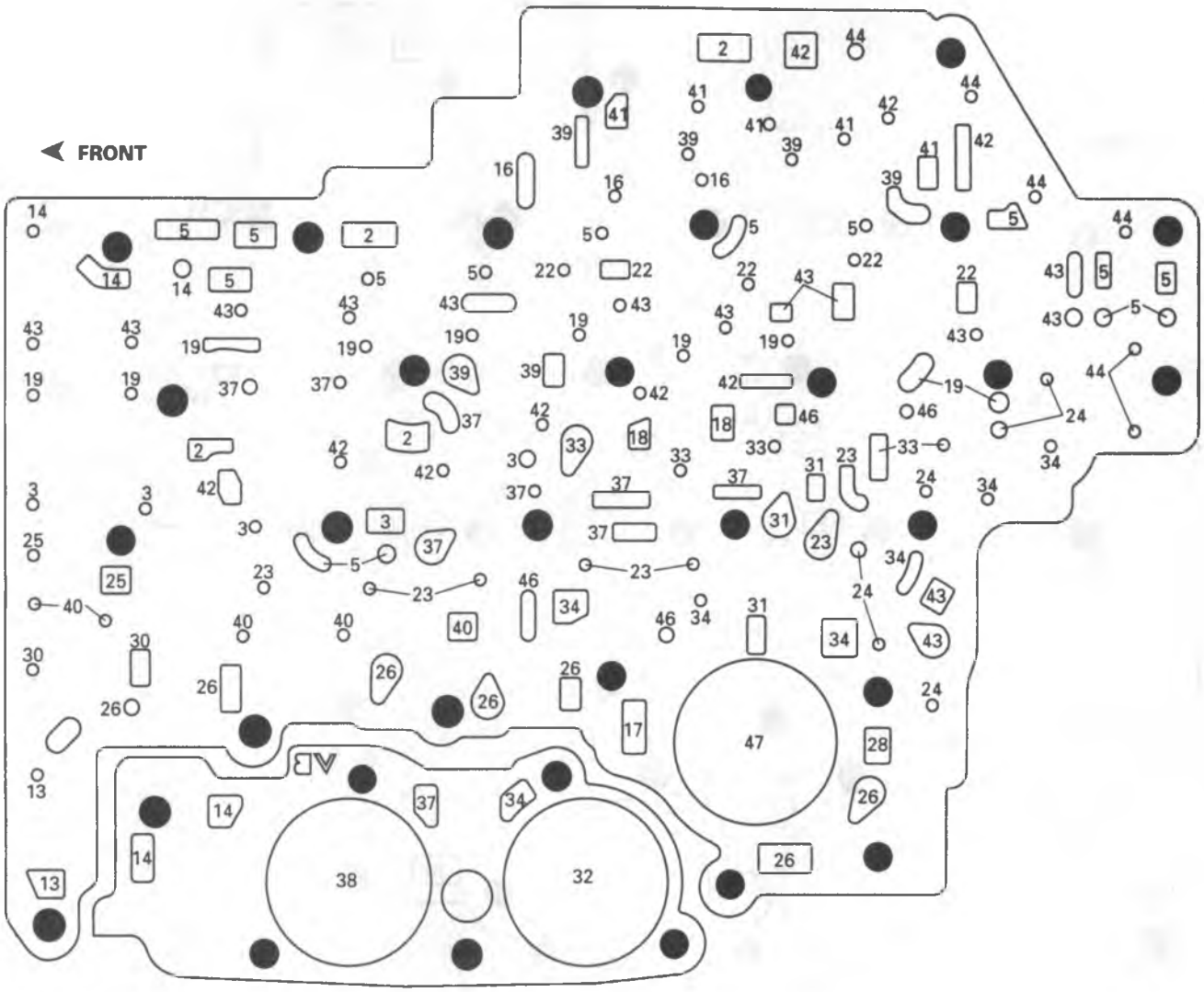

1 SUCTION
2 LINE
3 REGULATED APPLY
4 ORIFICED REGULATOR APPLY
5 ACTUATOR FEED
6 ORIFICED ACTUATOR FEED
7 CONVERTER FEED
8 REGULATED CONVERTER FEED
9 TCC TOGGLE
10 CONVERTER RELEASE
11 CONVERTER APPLY
12 COOLER
13 LUBE
14 TORQUE SIGNAL
15 ORIFICED TORQUE SIGNAL
16 PRN (PARK REVERSE NEUTRAL)
17 PRND 4-3
18 PRND 4
19 DRIVE
20 FILTERED ACTUATOR FEED
21 SIGNAL "A"
22 SIGNAL "B"
23 2-2 DRIVE
24 2ND CLUTCH
25 FILTERED 2-3 DRIVE
26 ACCUMULATOR
27 ORIFICED ACCUMULATOR
28 SECOND ACCUMULATOR
29 THIRD CLUTCH ACCUMULATOR
30 TCC SIGNAL
31 FRONT BAND APPLY
32 THIRD ACCUMULATOR
33 THIRD CLUTCH FEED
34 THIRD CLUTCH
35 THIRD / REVERSE
36 FOURTH CLUTCH FEED
37 FOURTH CLUTCH
38 FOURTH ACCUMULATOR
39 D 3-2-1
40 OVERRUN CLUTCH
41 D 2-1
42 LO
43 REVERSE
44 REAR BAND APPLY
45 EXHAUST
46 ORIFICED EXHAUST
47 VOID

MH0265-4L80-E

Figure 57 Spacer Plate to Case Gasket With Accumulator Housing Gasket

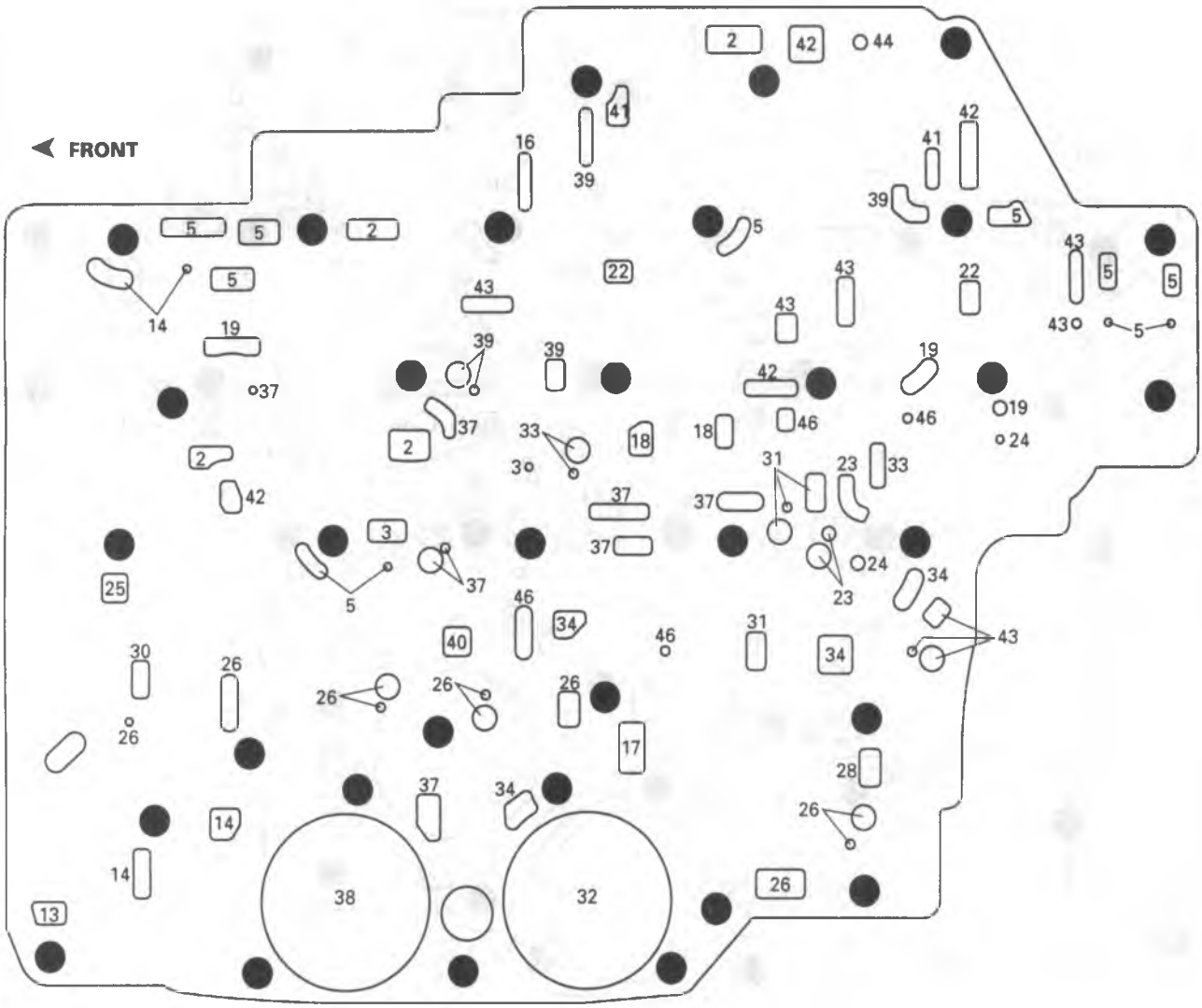

1 SUCTION
2 LINE
3 REGULATED APPLY
4 ORIFICED REGULATOR APPLY
5 ACTUATOR FEED
6 ORIFICED ACTUATOR FEED
7 CONVERTER FEED
8 REGULATED CONVERTER FEED
9 TCC TOGGLE
10 CONVERTER RELEASE
11 CONVERTER APPLY
12 COOLER
13 LUBE
14 TORQUE SIGNAL
15 ORIFICED TORQUE SIGNAL
16 PRN (PARK REVERSE NEUTRAL)
17 PRND 4-3
18 PRND 4
19 DRIVE
20 FILTERED ACTUATOR FEED
21 SIGNAL "A"
22 SIGNAL "B"
23 2-2 DRIVE
24 2ND CLUTCH
25 FILTERED 2-3 DRIVE
26 ACCUMULATOR
27 ORIFICED ACCUMULATOR
28 SECOND ACCUMULATOR
29 THIRD CLUTCH ACCUMULATOR
30 TCC SIGNAL
31 FRONT BAND APPLY
32 THIRD ACCUMULATOR
33 THIRD CLUTCH FEED
34 THIRD CLUTCH
35 THIRD / REVERSE
36 FOURTH CLUTCH FEED
37 FOURTH CLUTCH
38 FOURTH ACCUMULATOR
39 D 3-2-1
40 OVERRUN CLUTCH
41 D 2-1
42 LO
43 REVERSE
44 REAR BAND APPLY
45 EXHAUST
46 ORIFICED EXHAUST
47 VOID

MH0266-4L80-E

Figure 58 Spacer Plate

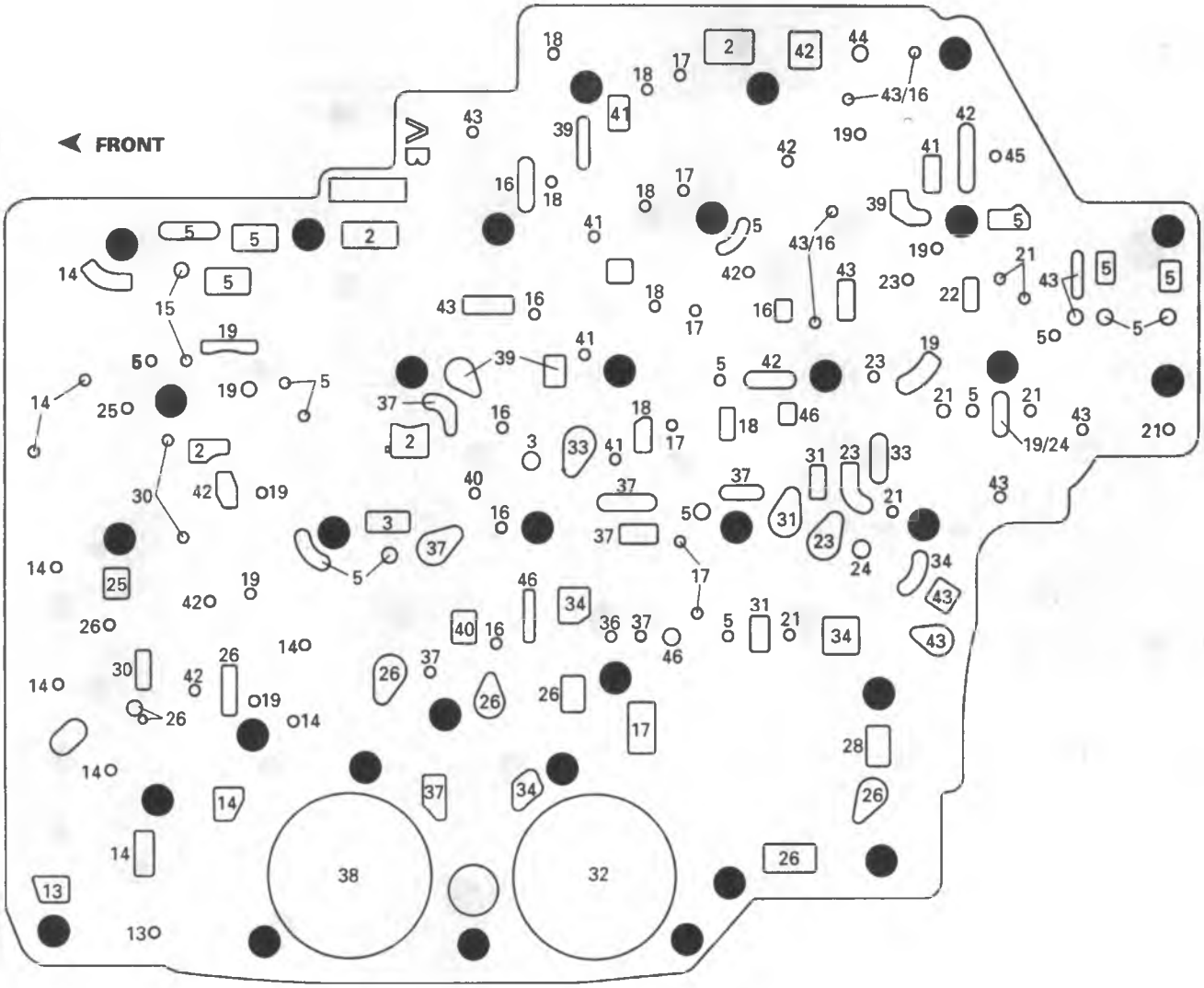

1 SUCTION
2 LINE
3 REGULATED APPLY
4 ORIFICED REGULATOR APPLY
5 ACTUATOR FEED
6 ORIFICED ACTUATOR FEED
7 CONVERTER FEED
8 REGULATED CONVERTER FEED
9 TCC TOGGLE
10 CONVERTER RELEASE
11 CONVERTER APPLY
12 COOLER
13 LUBE
14 TORQUE SIGNAL
15 ORIFICED TORQUE SIGNAL
16 PRN (PARK REVERSE NEUTRAL)
17 PRND 4-3
18 PRND 4
19 DRIVE
20 FILTERED ACTUATOR FEED
21 SIGNAL "A"
22 SIGNAL "B"
23 2-2 DRIVE
24 2ND CLUTCH
25 FILTERED 2-3 DRIVE
26 ACCUMULATOR
27 ORIFICED ACCUMULATOR
28 SECOND ACCUMULATOR
29 THIRD CLUTCH ACCUMULATOR
30 TCC SIGNAL
31 FRONT BAND APPLY
32 THIRD ACCUMULATOR
33 THIRD CLUTCH FEED
34 THIRD CLUTCH
35 THIRD / REVERSE
36 FOURTH CLUTCH FEED
37 FOURTH CLUTCH
38 FOURTH ACCUMULATOR
39 D 3-2-1
40 OVERRUN CLUTCH
41 D 2-1
42 LO
43 REVERSE
44 REAR BAND APPLY
45 EXHAUST
46 ORIFICED EXHAUST
47 VOID

MH0267-4L80-E

Figure 59 Spacer Plate to Valve Body Gasket

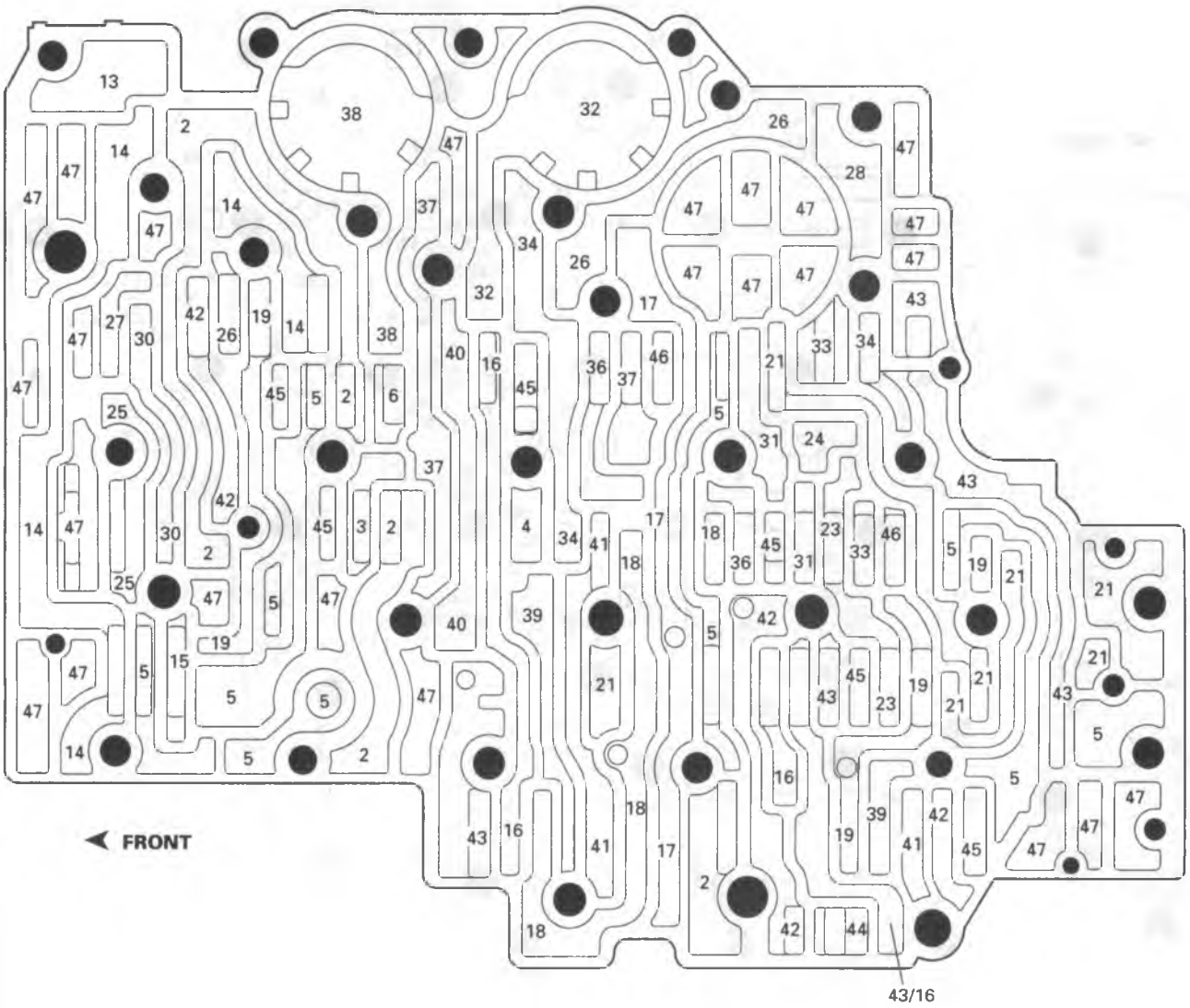

1 SUCTION
2 LINE
3 REGULATED APPLY
4 ORIFICED REGULATOR APPLY
5 ACTUATOR FEED
6 ORIFICED ACTUATOR FEED
7 CONVERTER FEED
8 REGULATED CONVERTER FEED
9 TCC TOGGLE
10 CONVERTER RELEASE
11 CONVERTER APPLY
12 COOLER
13 LUBE
14 TORQUE SIGNAL
15 ORIFICED TORQUE SIGNAL
16 PRN (PARK REVERSE NEUTRAL)
17 PRND 4-3
18 PRND 4
19 DRIVE
20 FILTERED ACTUATOR FEED
21 SIGNAL "A"
22 SIGNAL "B"
23 2-2 DRIVE
24 2ND CLUTCH
25 FILTERED 2-3 DRIVE
26 ACCUMULATOR
27 ORIFICED ACCUMULATOR
28 SECOND ACCUMULATOR
29 THIRD CLUTCH ACCUMULATOR
30 TCC SIGNAL
31 FRONT BAND APPLY
32 THIRD ACCUMULATOR
33 THIRD CLUTCH FEED
34 THIRD CLUTCH
35 THIRD / REVERSE
36 FOURTH CLUTCH FEED
37 FOURTH CLUTCH
38 FOURTH ACCUMULATOR
39 D 3-2-1
40 OVERRUN CLUTCH
41 D 2-1
42 LO
43 REVERSE
44 REAR BAND APPLY
45 EXHAUST
46 ORIFICED EXHAUST
47 VOID

MH0268-4L80-E

Figure 60 Valve Body Oil Passages

HIGH IMPEDANCE MULTIMETER
(DIGITAL VOLTMETER-DVM)
J 34029-A

VOLTMETER — Voltage position measures magnitude of voltage when connected in parallel to an existing circuit. A digital voltmeter with a 10 meg ohm input impedance is used because this type of meter will not load down the circuit and result in faulty readings. Some circuits require accurate low voltage readings because they have a very high resistance.

AMMETER — When used as an ammeter, this meter accurately measures extremely low current flow. Refer to meter instructions for more information.

- Selector must be set properly for both function and range. DC is used for most automotive measurements.

OHMMETER — Measures resistance of circuit directly in ohms. Refer to meter instructions for more information.

- OL display in all ranges indicates open circuit.
- Zero display in all ranges indicates a short circuit.
- An intermittent connection in a circuit may be indicated by a digital reading that will not stabilize on the circuit.
- Range Switch.

200Ω — Reads ohms directly
2K, 20K, 200KΩ — Reads ohms in thousands
2M and 20MΩ — Reads ohms in millions

J 34636

CIRCUIT TESTER
Used for checking all relays and solenoids before connecting them to a new ECM. Measures the circuit resistance and indicates pass or fail via green or red LED. Amber LED indicates current polarity. Can also be used as a non-powered continuity checker.

J 34142-A

UNPOWERED TEST LIGHT
Used for checking wiring for complete circuit, short to ground, or voltage.

TECH 1 TESTER
Used to check solenoids and other electronic components. Can record vehicle data during dynamic testing, and turn some electronic components on and off.

Universal Pressure Gauge Set
(9 Ft. Hose; 0-300 PSI)

J 21867

UNIVERSAL PRESSURE GAUGE SET
(9 Ft. Hose; 0-300 PSI)
Used for checking line pressures, pump output (min., max.) in all gear ranges.

MH0269-4L80-E

Figure 61 Electrical Diagnosis Tools

ON-VEHICLE SERVICE

PARTS CLEANING, INSPECTION AND REPLACEMENT

1. Use appropriate safety equipment such as:
   - Safety glasses.
   - Safety shoes.
   - Gloves.
2. Keep work area and tools clean.
3. Clean the transmission exterior before removing parts.
4. Do not use wipe cloths or rags.
5. Do not use solvents on:
   - Rubber seals.
   - Plastic/Teflon® thrust washers.
6. Blow out all passages with compressed air.
7. Clean out small passages with fine wire.
8. Handle parts carefully to prevent damage.
9. Lubricate all internal parts with transmission fluid during assembly.
10. Always use torque wrench for proper torque.
11. Recondition damaged or stripped aluminum threads with thread inserts.
12. Replace all gaskets and seals.
    - Do not use gasket cement or sealers.
13. Replace Teflon® and rubber lip seals only when necessary and install them using the appropriate seal protector.

Inspect

1. Manual linkage for:
   - Wear at pivoting points.
   - Bent or broken links and rods.
2. All seals, gasket and mating surfaces for:
   - Nicks.
   - Cuts.
   - Damage.
3. Snap rings for:
   - Expansion or compression.
   - Distortion.
   - Nicks.
   - Proper ring to groove fit.
4. Bearings and thrust surfaces for:
   - Wear.
   - Scoring.
   - Pitting.

TRANSMISSION FLUID CHECKING PROCEDURE

NOTICE: The automatic transmission fluid level must be checked with the vehicle at normal operating temperature 82°-93°C (180°-200°F). Temperature will greatly effect transmission fluid level. If the vehicle is not at normal operating temperature and the proper checking procedures are not followed the result could be a false reading of the fluid level indicator and an incorrect adjustment of the fluid level.

1. Start engine and drive vehicle for a minimum of 15 miles (24 km), or until normal operating temperature is reached.
2. Park vehicle on level ground.
3. Move gear selector to "PARK."
4. Apply park brake and block wheels.
5. Let the vehicle idle for 3 minutes with accessories off.
6. Check fluid level, color and condition. Refer to "Transmission Fluid Information" in this section. See figure 62 for dipstick detail.

Important

DO NOT OVERFILL

Overfilling can cause foaming and loss of fluid through the vent. Slippage and transmission failure can result.

Fluid level too low can cause slipping, particularly when the transmission is cold or the vehicle is on a hill.

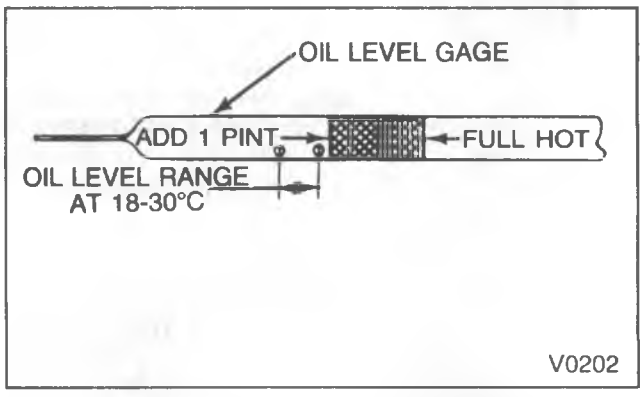

Figure 62 – Transmission Dipstick

SHIFT LINKAGE

Remove or Disconnect (Figure 63)

- Apply the parking brake.

1. Screw (10) and the washer (9) from swivel (12).
2. Rod and the swivel from the equalizer lever (4).
3. Retaining pin (1).
4. Rods (5) from the shift lever.
   - Bearing (6) and the insulator (7).
5. Retaining pin (1).

6. Equalizer lever (4).

Clean

- Metal parts using solvent. Wipe dry using a clean, dry rag.
- Rubber or nylon parts using soapy water. Wipe dry using a clean, dry rag.

Install or Connect (Figure 63)

1. Equalizer lever (4) and a new retaining pin (1).
2. Swivel (12) and the rod to the equalizer lever.
3. Washer (9) and screw (10).
4. Rod (5) to the shift lever (4).
   - Insulator (7) and the bearing (6).
5. New retaining pin.

- Adjust the linkage. Refer to "Shift Linkage Adjustment" in this section.

SHIFT LINKAGE ADJUSTMENT

- Apply the parking brake.

1. Loosen the nut.
2. Put the column selector in the "N" (Neutral) position.
   - Put the lever into the neutral gate, do not use the indicator to find the neutral position.
3. Put the transmission in neutral.
   - Move the shift lever (A) to the forward position, then back to the second detent (Figure 64).
4. Hold the rod tightly in the swivel.

Tighten

- Nut to 23 N•m (17 ft. lbs.).

5. Put the column selector lever in the "P" (Park) position.
6. Check the adjustment.
   - The column selector lever must go into all positions.
   - The engine must start in the "P" (Park) or "N" (Neutral) positions only. Adjust if needed, refer to "Neutral Start Switch" in this section.

CAUTION: With the selector lever in the "Park" position, the parking pawl should freely engage within the rear (reaction) internal gear lugs or output ring gear lugs and prevent the vehicle from rolling, which could cause personal injury.

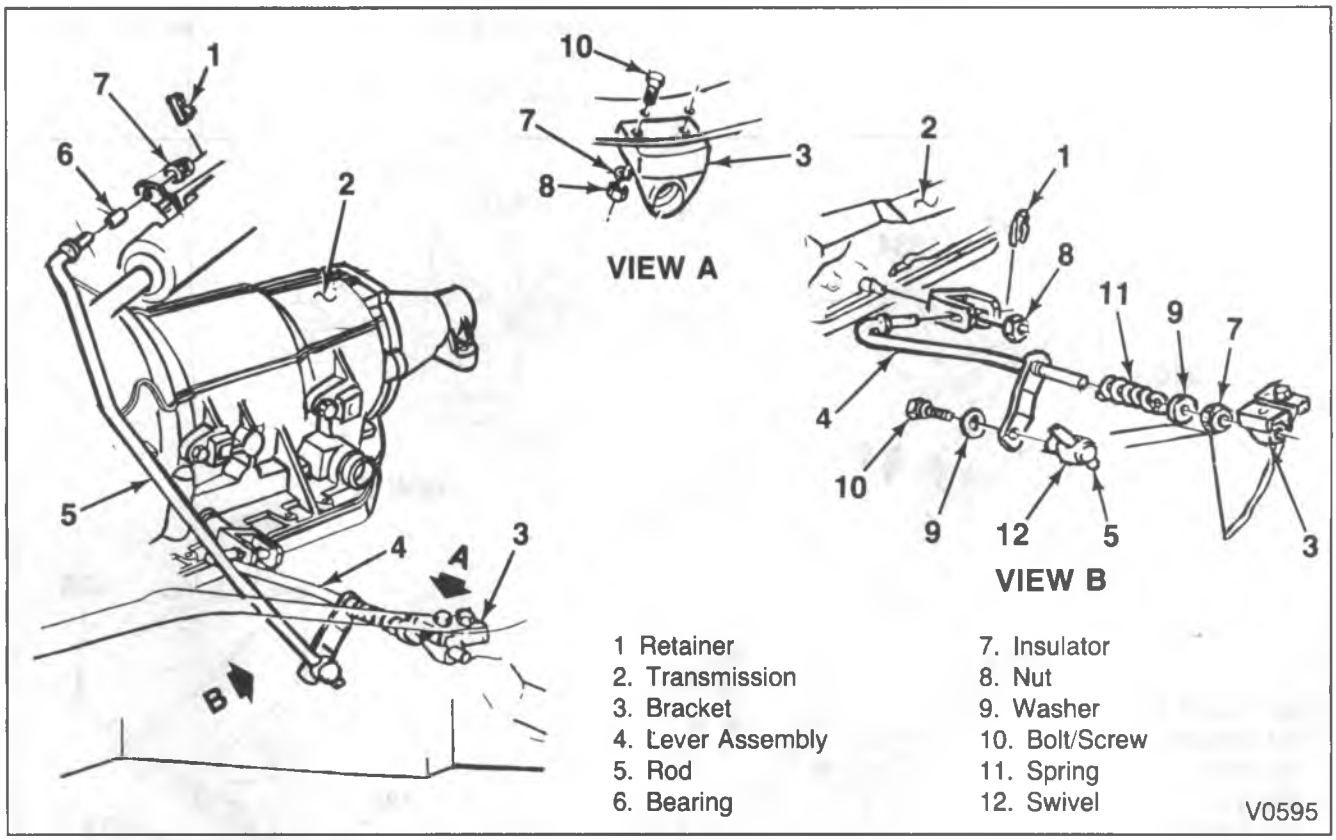

Figure 63 – Shift Linkage R/V Models

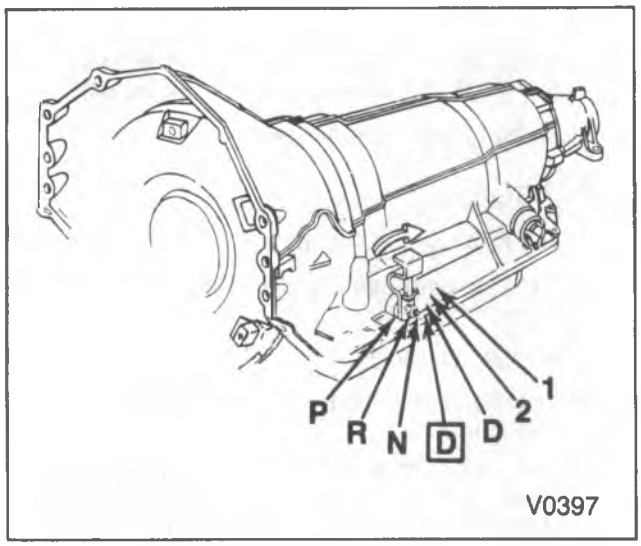

Figure 64 – Shift Positions

P-MOTORHOME MODELS

Remove or Disconnect (Figure 65)

- Apply the parking brake.

1. Retaining pin from column lever.
2. Cable retaining bolts.
3. Cable from transmission bracket (346).
4. Pin (336).
5. Clevis pin (339).
6. Cable (333).

Clean

- Metal parts using solvent. Wipe dry using a clean, dry rag.
- Rubber or nylon parts using soapy water. Wipe dry using a clean, dry rag.

Install or Connect (Figure 65)

1. Cable (333).
2. Clevis pin (339).
3. Pin (336).
4. Cable to transmission bracket (346).
5. Cable retaining bolts.
6. New retaining pin onto column lever.

Adjust

- Apply the parking brake.

1. Remove clevis pin (339).
2. Put the column selector lever in the "N" (Neutral) position.
   - Put the lever into the neutral gate, do not use the indicator to find the neutral position.
3. Put the transmission in neutral.
   - Move the shift lever (A) to the forward position then back to the second detent.
4. Turn clevis until it can be placed on the transmission stud.
5. Install clevis pin (339).

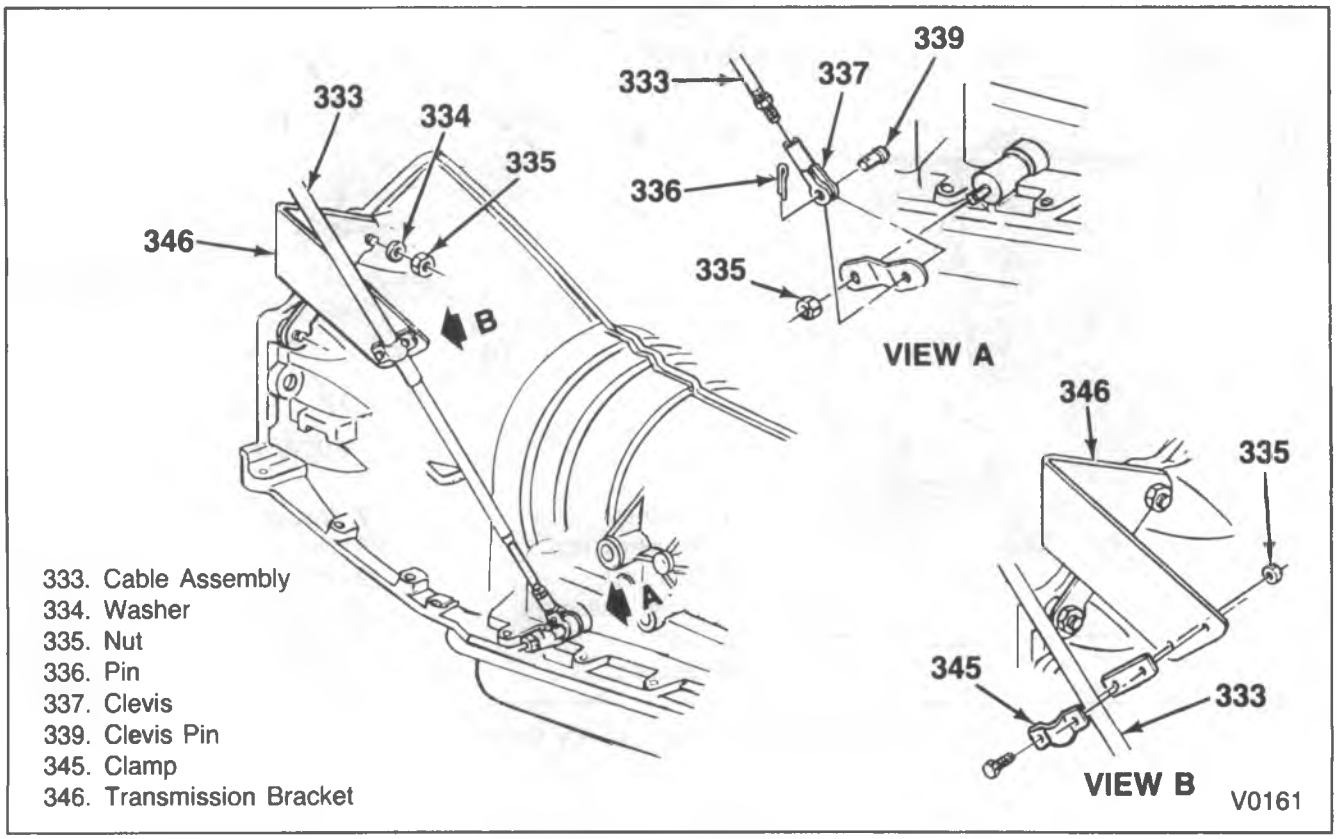

Figure 65 – Shift Linkage P-Motorhome Models

6. Check the adjustment.
   - The column selector lever must go into all positions.
   - The engine must start in the "P" (Park) or "N" (Neutral) positions only. Adjust if needed, refer to "Neutral Start Switch" in this section.

CAUTION: With the selector lever in the "Park" position, the parking pawl should freely engage within the rear (reaction) internal gear lugs or output ring gear lugs and prevent the vehicle from rolling, which could cause personal injury.

- Align the indicator, if needed.
- Release the parking brake.

DOWNSHIFT RELAY REPLACEMENT

Remove or Disconnect (Figure 66)

- Open the hood.

1. Retainer (402).
2. Electrical connector (403).
3. Screws (404) from the plenum panel.
4. Relay (401) from the vehicle.

Install or Connect (Figure 66)

1. New relay (401).
2. Tighten screws (404) to the plenum panel.
3. Electrical connector (403).
4. Retainer (402).

- Close the hood.

CHANGING THE FLUID AND FILTER

Remove or Disconnect (Figure 67)

- Raise the vehicle and support it using suitable safety stands.
- Place a drain pan under the transmission oil pan.

1. Oil pan bolts (416) from the front and sides only.
   - Loosen the rear oil pan screws approximately 4 turns.

NOTICE: Do not damage the transmission case or oil pan seating surfaces.

2. Lightly tap the oil pan (415) with a rubber mallet or pry down to allow the fluid to drain.
   - Inspect the fluid color, refer to "Transmission Fluid Information" in this section.
3. Remaining oil pan bolts (416), oil pan and the gasket (414).
4. Filter (413).
5. Seal (412).

Clean

- Transmission case and oil pan gasket surfaces with solvent and air dry.
  - All traces of old gasket material must be removed.

Install or Connect (Figure 67)

- Coat the seal (412) with a small amount of transmission oil.

1. Seal (412).
2. New filter (413).
3. New gasket onto the oil pan.
4. Oil pan.
5. Oil pan screws.

   Tighten

   - Bolts to 24 N•m (18 ft. lbs).

6. New transmission fluid.
   - Lower the vehicle.
   - Fill the transmission to the proper level with DEXRON II fluid. Refer to "Checking and Adding Fluid" in this section.

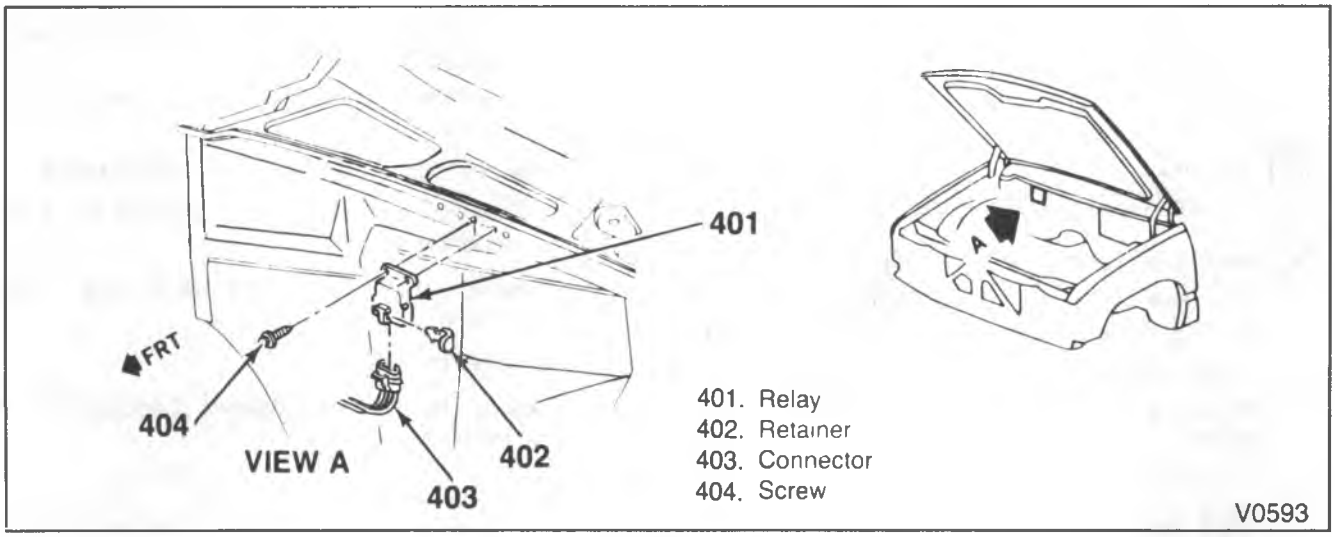

Figure 66—Downshift Relay

Important

- Do not overfill.

7. Check the oil pan for leaks.

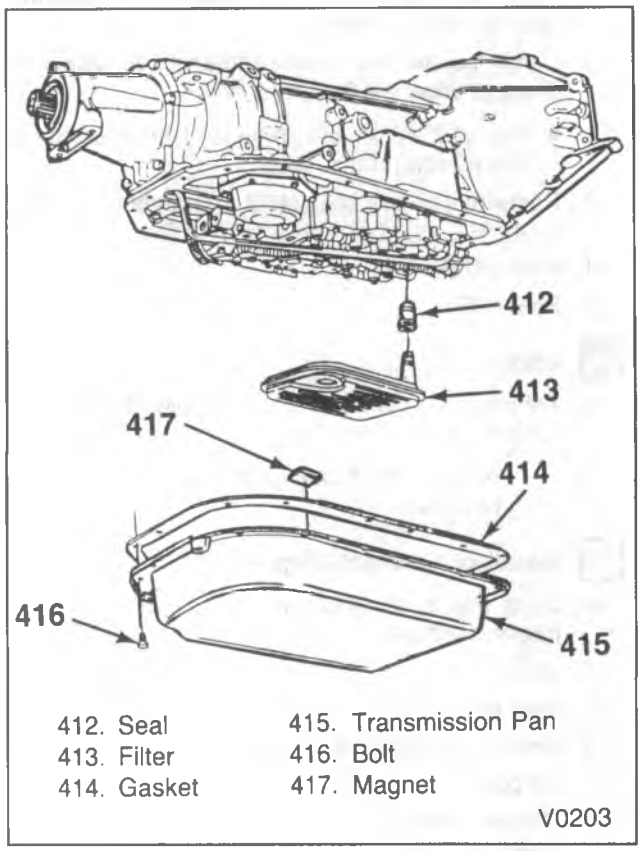

Figure 67 – Removing Pan & Filter Assembly

VEHICLE SPEED SENSORS

Remove or Disconnect (Figure 68)

- Apply the parking brake.
- Raise the vehicle and support it with suitable safety stands.

1. Harness connector.
2. Screw (83).
3. Speed sensor (81).
4. Seal.

Inspect

- All parts for wear and damage.

Install or Connect (Figure 68)

1. New seal onto the speed sensor (81).
   - Coat the seal with a thin film of transmission oil.
2. Speed sensor (81).

NOTICE: See "Notice" on page 7A2-1 of this section.

3. Screw (83).

Tighten

- Screw (83) to 11 N•m (97 in. lbs.).

4. Harness connector.
   - Lower the vehicle.
   - Release the parking brake.
5. Transmission fluid if needed. Refer to "Checking and Adding Fluid" in this section.

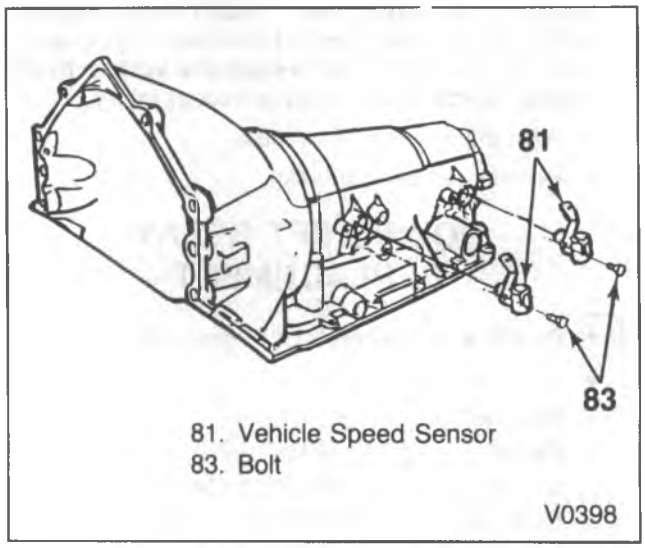

Figure 68 – Vehicle Speed Sensor

REAR EXTENSION OIL SEAL

Remove or Disconnect (Figure 69)

- Raise the vehicle.

1. Transmission fluid.
2. Propeller shaft. Refer to PROPELLER SHAFT (SEC. 4A).
3. Seal.

Install or Connect (Figure 69)

Tool Required:

J 38694 Extension Housing Seal Installer (Fixed Yoke)

J 38869 Extension Housing Seal Installer (Slip Yoke)

1. New seal using J 38694 or J 38869 as needed.
   - Coat the outer edge of the seal case with a non-hardening sealer.
2. Propeller shaft. Refer to PROPELLER SHAFT (SEC. 4A).
   - Lower the vehicle.
3. New transmission fluid. Refer to "Specifications" for the proper amount.

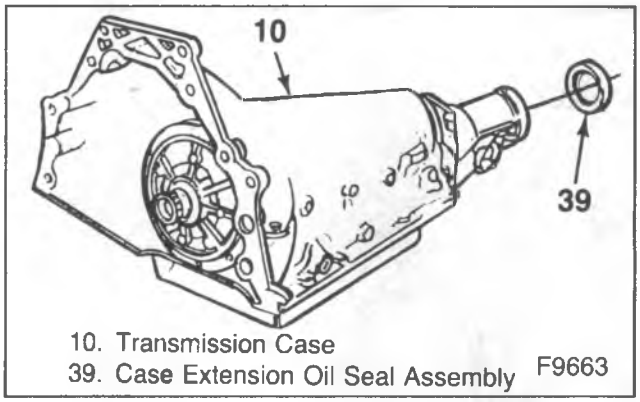

Figure 69 – Rear Extension Oil Seal

TRANSMISSION REPLACEMENT

If the transmission is being lowered for clearance, do steps 1-8 only.

Remove or Disconnect (Figure 70)

Tool Required:

J 21366 Converter Holding Strap

1. Negative battery cable.
2. Air cleaner.
   - Raise the vehicle.
3. Transmission fluid.
4. Shift linkage.
5. Propeller shaft, refer to PROPELLER SHAFT (SEC. 4A).
   - Front propeller shaft, if used, from the transfer case.
   - Any other components as needed for clearance.
   - Support the transmission, and the transfer case if used, with a transmission jack.
6. Transmission crossmember.

Important

- Do not stretch or damage any cables, wires or other components when lowering the transmission.

7. Transmission far enough for clearance to reach other components.
8. Dipstick tube and the seal.
   - Cover the opening in the transmission.
9. Electrical connectors from the transmission.
10. Cooler lines.
    - Cap all openings in the transmission and the lines.
11. Transfer case shifter and move it aside, refer to TRANSFER CASE (SEC. 7D).
12. Transmission support braces.
    - Note the location of the braces, they must be installed in the same positions.
13. Converter housing cover.
    - Mark the flywheel and the torque converter alignment.
14. Torque converter bolts.

Important

- Support the engine with a jack or hoist before disconnecting the transmission.

15. Screws.
    - Note the location of any brackets or clips and move them aside.
    - Slide the transmission straight back off the locating pins (A) and install J 21366.
16. Transmission from the vehicle.

Clean

- Transmission case using a solvent dampened cloth, do not allow solvent to enter the transmission. Air dry.
- All hardware and flywheel cover using solvent. Air dry.

Inspect

- All parts for wear and damage.
- All seals and fittings for signs of leakage.
- Torque converter for stripped or broken weld nuts or screw holes.
- Transmission case for porosity.

Install or Connect (Figure 70)

Tool Required:

J 21366 Converter Holding Strap

- If the transmission was lowered for clearance only, do steps 13-20.

1. Transmission.
   - Be sure the torque converter is seated properly and that J 21366 is in place.
   - Support the transmission, and the transfer case if used, with a transmission jack.
   - Raise the transmission into place and remove J 21366.
   - Slide the transmission straight onto the locating pins (A) while lining up the marks on the flywheel and the torque converter.

Important

- The torque converter must be flush onto the flywheel and rotate freely by hand.

2. Screws.
   - All brackets, clips and harnesses must be in the positions they were removed from.
   - Do not install the dipstick tube or the transmission support brace screws.

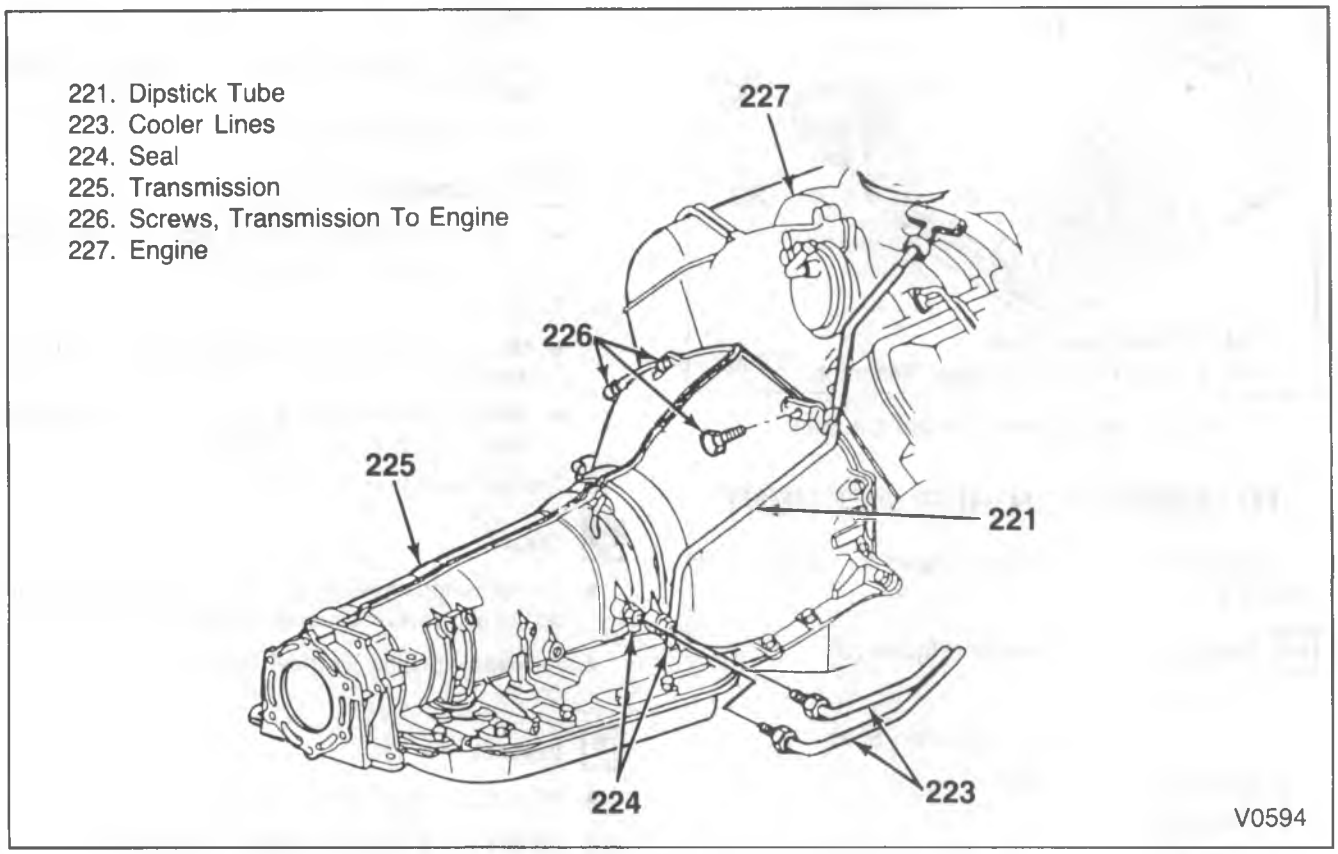

Figure 70—Transmission and Components

NOTICE: See "Notice" on page 7A2-1 of this section.

3. Torque converter bolts.

   Tighten

   - Screws finger tight to ensure proper converter seating.
   - Screws to 65 N•m (48 ft. lbs.).
   - Remove the engine hoist or jack.
4. Converter housing cover.
   - Hook the cover under the lip of the engine oil pan.
5. Transmission support braces.
   - The braces must be installed in the positions they were removed from.
6. Transfer case shifter, refer to TRANSFER CASE (SEC. 7D).
7. Cooler lines.
   - Uncover the openings.
   - Do not twist or bend the lines.
8. Electrical connectors to the transmission.
9. Dipstick tube with a new seal.
   - Uncover the opening and install the seal first.
   - Screw.
10. Transmission into place.

    Important

    - Do not pinch or damage any cables, wires or other components when raising the transmission.
11. Transmission crossmember and the transmission mount.
    - Any components that were removed for clearance.
    - Remove the transmission jack.
12. Propeller shaft, refer to PROPELLER SHAFT (SEC. 4A).
    - Front propeller shaft to the transfer case, if used.
13. Shift linkage.
    - Lower the vehicle.
14. New transmission fluid.
15. Air cleaner.
16. Negative battery cable.

CONTROL VALVE ASSEMBLY

Remove or Disconnect (Figure 71)

Tools Required:

Magnet to capture check balls

J 25025-B Guide Pin Set

- Raise the vehicle and support it using suitable safety stands.
- Place a drain pan under the transmission oil pan.

1. Transmission oil pan and filter. Refer to "Changing the Fluid and Filter" in this section.
2. Connector wire harness assembly (34) from six hook ups. USE CAP TO COVER ELECTRICAL PINS AT CASE CONNECTION. Refer to figure 29 for connector location.

3. Bolts (35) from valve body assembly, manual detent spring and roller assembly (41).
4. Pressure manifold assembly (40).

NOTICE: Be sure five O-rings are attached to pressure manifold assembly.

5. Three wiring clips (33) (refer to figure 29 for clip location), fluid level indicator stop (43), lube pipe (39), lube pipe retainer (37) and clamp (38).
6. Control valve assembly (44) including the accumulator housing assembly (51), valve body gaskets (45 & 48), spacer plate (46) and accumulator gasket (47).
7. Eight check balls (54) from case passages.
8. Two speed sensor and bracket assemblies (22) and PWM solenoid screen (75).

Install or Connect (Figures 71 and 73)

NOTICE: For steps 9 and 10 see "Notice" on page 7A2-1 of this section.

1. Install eight check balls (54) in proper location into case fluid passages.
2. Gasket (48) spacer plate to case.
3. Complete valve body assembly (44) onto case (7). Use J 25025-B guide pin set.
4. Pressure manifold (40) onto valve body assembly (44). Spring and roller assembly (41) into place.
5. Three wiring clips (33) and fluid indicator stop (43). Refer to figure 29 for clip location.
6. Bolts (35).
7. Attach wiring harness (34) to six connectors. Put large end into case first. Refer to figure 29 for connector location.
8. Lube pipe (39) long end into case.
9. Lube pipe clip (37) with short bolt (36).

Tighten

- Bolts to 14 N•m (124 in. lbs.).

10. Bolts (35) attaching valve body to case.

Tighten

- Bolts to 14 N•m (124 in. lbs.).

11. Transmission oil filter and oil pan. Refer to "Changing the Fluid and Filter" in this section.
12. New transmission fluid.
    - Lower the vehicle.
    - Fill the transmission to the proper level with DEXRON II fluid. Refer to "Checking and Adding Fluid" in this section.

Important

- Do not overfill.

13. Check the oil pan for leaks.

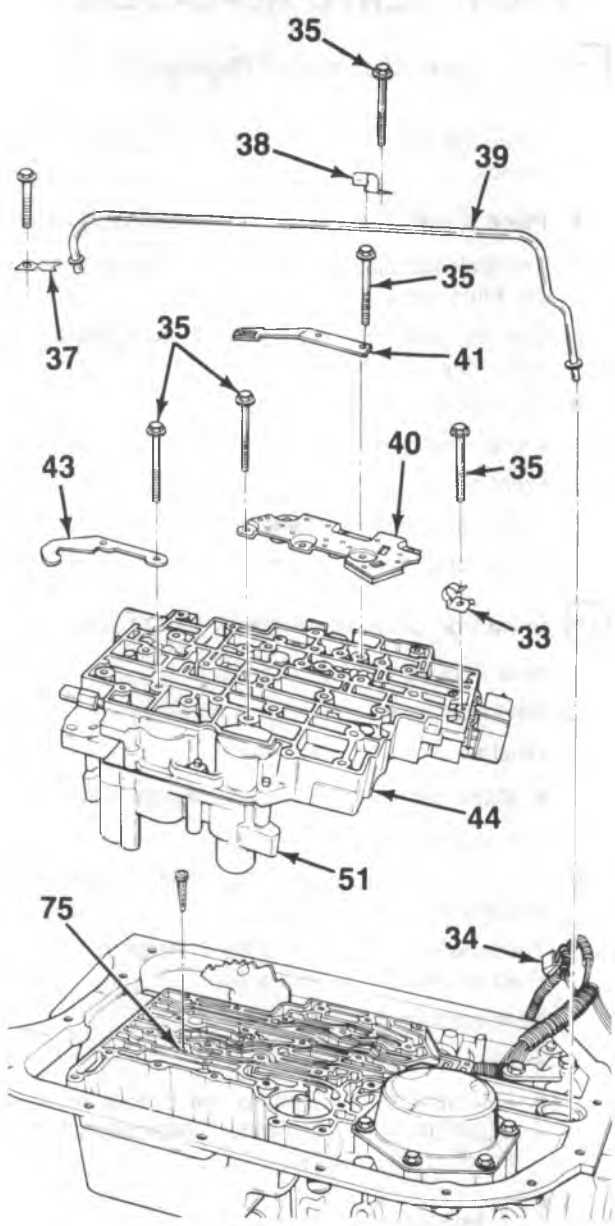

33. Electrical Cable Clamp
34. Electrical Wiring Harness
35. Hex Head Bolt
37. Lube Pipe Retainer
38. Lube Pipe Clamp
39. Lube Pipe
40. Pressure Switch Manifold
41. Manual Detent Spring Assembly
43. Fluid Level Indicator Stop
44. Control Valve Body Assembly
51. Accumulator Housing
75. Solenoid Screen

MH0003-4L80-E

Figure 71 – Control Valve Assembly

FRONT SERVO REPLACEMENT

Remove or Disconnect (Figures 71, 72 and 73)

- Raise the vehicle and support it using suitable safety stands.
- Place a drain pan under the Transmission oil pan.

1. Transmission oil pan and oil filter. Refer to "Changing the Fluid and Filter" in this section.
2. Control valve assembly. Refer to "Control Valve Assembly" in this section.
3. Front servo piston.
4. Front servo piston pin.
5. Front servo washer.
6. Front servo spring retainer.
7. Front servo piston spring.

Install or Connect (Figures 71, 72 and 73)

1. New front servo piston spring.
2. New front servo piston spring retainer.
3. Washer, piston pin and piston.
   - Make certain tapered end contacts band.
4. Front servo assembly into case.
5. Control valve assembly. Refer to "Control Valve Assembly" in this section.
6. Transmission oil pan and filter. Refer to "Changing Fluid and Filter" in this section.
7. New transmission fluid.
   - Lower the vehicle.
   - Fill the transmission to the proper level with DEXRON II fluid. Refer to "Checking and Adding Fluid" in this section.

Important

- Do not overfill.

8. Check the oil pan for leaks.

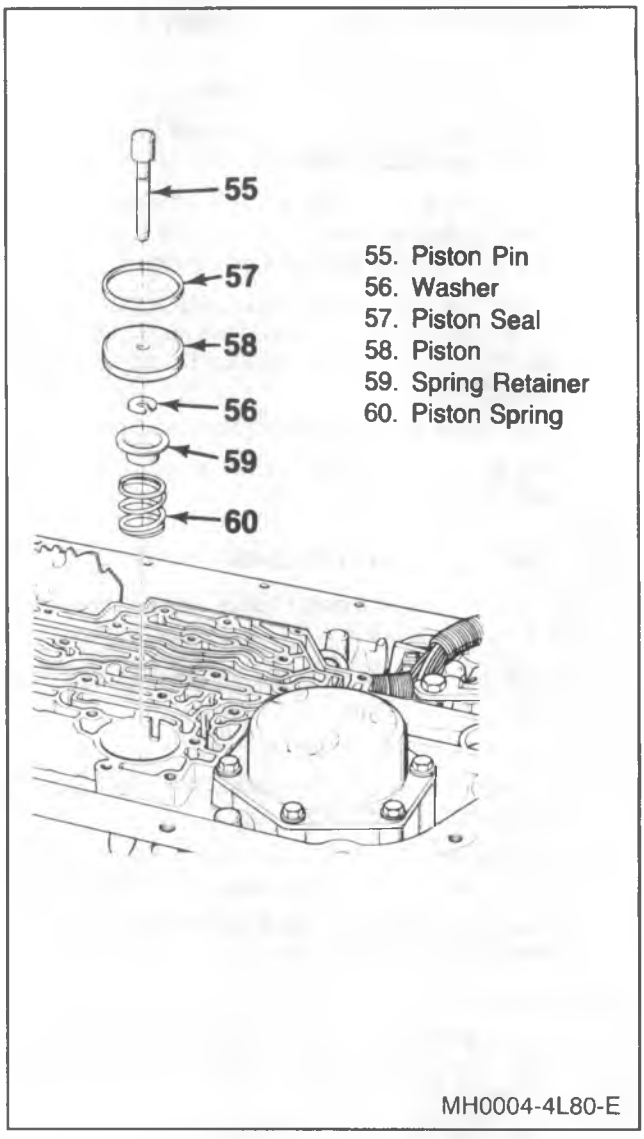

Figure 72 – Front Servo Assembly

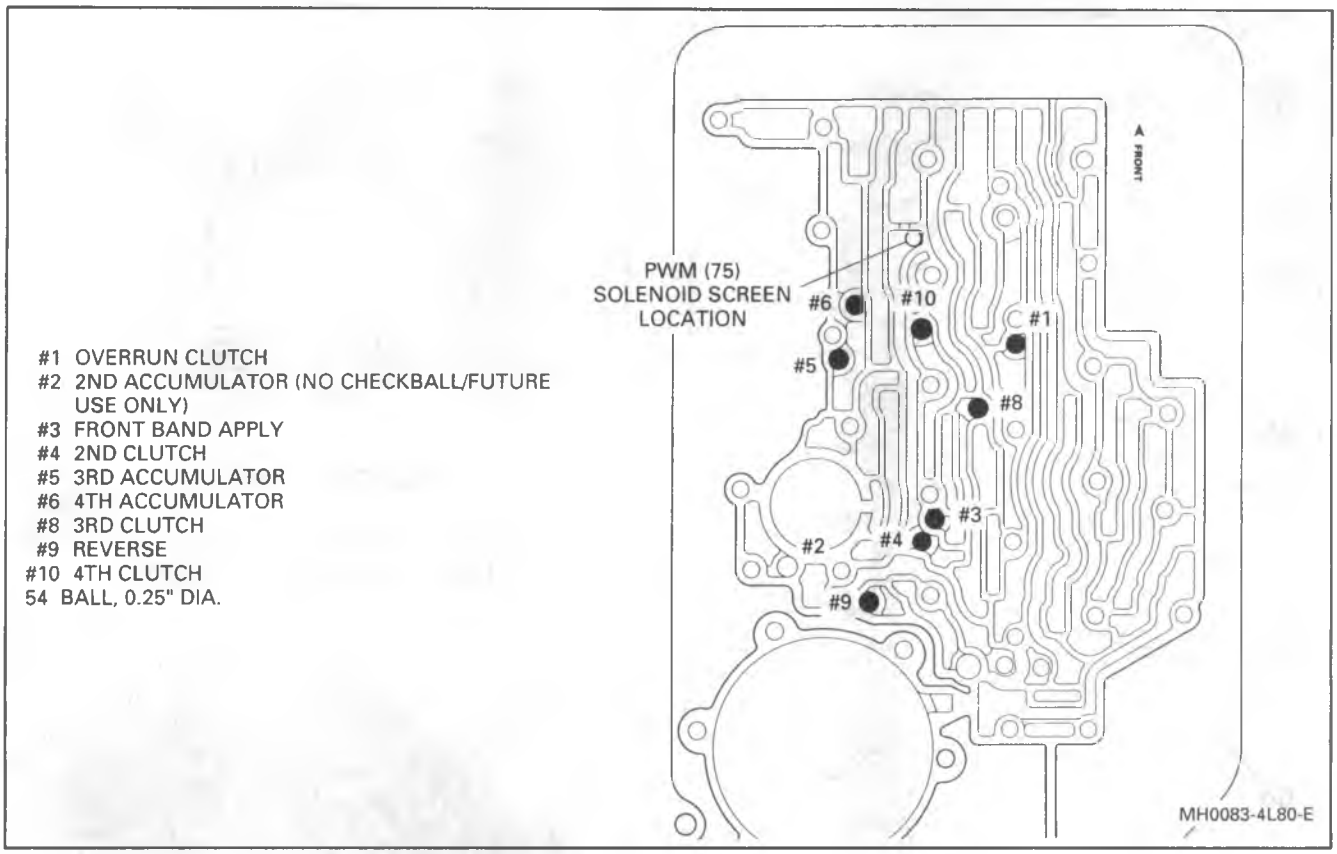

Figure 73 – Check Ball Location

REAR SERVO REPLACEMENT

Remove or Disconnect (Figures 74 and 75)

1. Bolts (Servo cover to case) (61).
2. Rear servo cover (62).
3. Rear servo cover gasket (63).
4. Retaining clip (64).
5. Rear servo piston (65).
6. Reverse servo piston seal (66).
7. Accumulator piston (68).
8. Inner and outer piston seals (67 and 69).
9. Washer (70).
10. Rear servo spring (71).
11. Rear servo spring retainer (72).
12. Rear band apply pin (73).
13. Rear accumulator spring (74).

Band Apply Pin Checking

Tools Required:

J 21370-10 Gage Pin

J 38737 Band Apply Pin Checking Tool

Measure (Figures 76 and 77)

1. Place J 21370-10 in the servo bore.
2. Position J 38737 over the bore with the hex nut facing the parking pawl linkage.
3. Fasten with two rear servo cover bolts (61) and torque to 24 N•m (18 lb. ft.).
4. Make sure J 21370-10 moves freely in the tool and pin bore.
5. To determine correct pin length apply 34 N•m (25 lb. ft.) torque to the nut on the gage.
6. For pin selection, see figure 77.

Install or Connect (Figures 74 and 75)

1. Rear accumulator spring (74).
2. Rear servo spring retainer (72), rear servo spring (71) and servo washer (70) on rear band apply pin (73).
3. New inner (69) and outer (67) accumulator piston oil seals on accumulator piston (68).
4. New rear servo piston seal (66) on rear servo piston (65) and press onto rear band apply pin (73).
5. Retaining ring (64).
6. Piston assembly into bore.
7. Rear servo cover gasket (63).
8. Rear servo cover (62).
9. Bolts (61).

Tighten

- Bolts to 27 N•m (20 ft. lbs.).

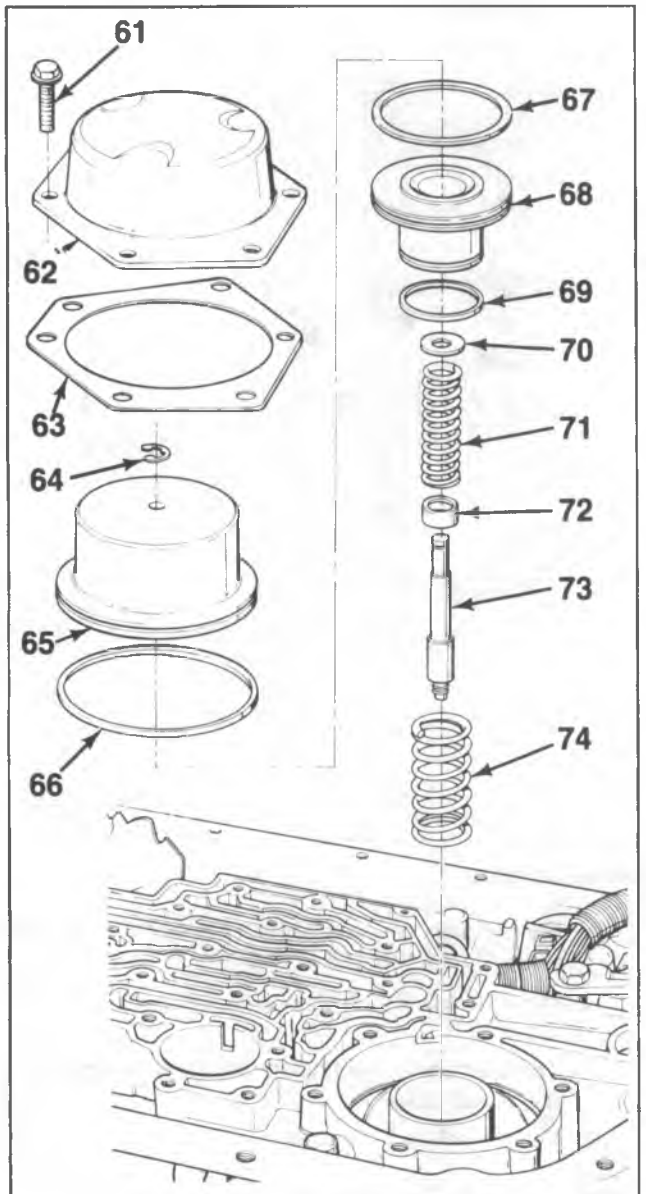

61. Rear Servo Cover Bolt
62. Rear Servo Cover
63. Rear Servo Cover Gasket
64. Retaining Clip
65. Rear Servo Piston
66. Outer Ring Oil Seal
67. Inner Ring Oil Seal
68. Rear Accumulator Piston
69. Reverse Servo Piston Seal
70. Servo Piston Seal
71. Rear Servo Spring
72. Rear Piston Spring Retainer
73. Rear Band Apply Pin
74. Rear Accumulator Spring

MH0005-4L80-E

Figure 74—Rear Servo Assembly

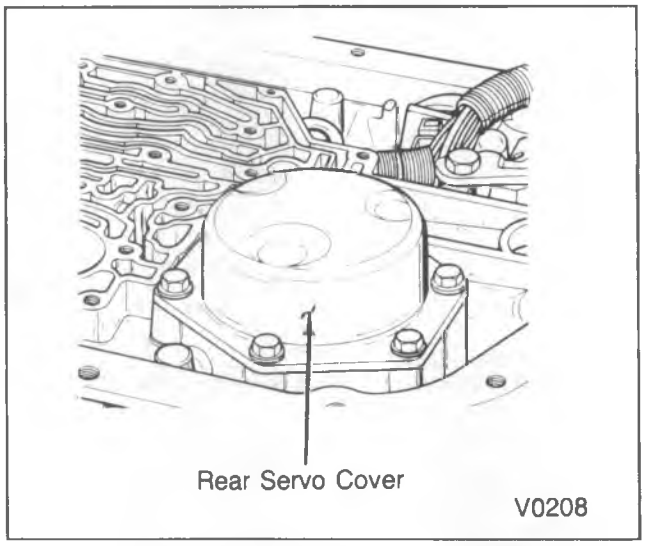

Figure 75—Rear Servo Location

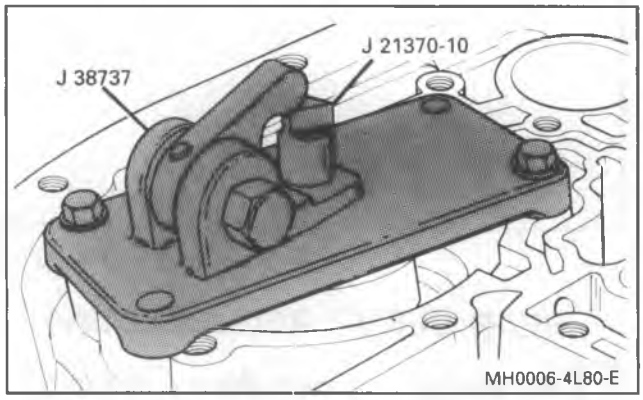

Figure 76—Installing Servo Pin Gage

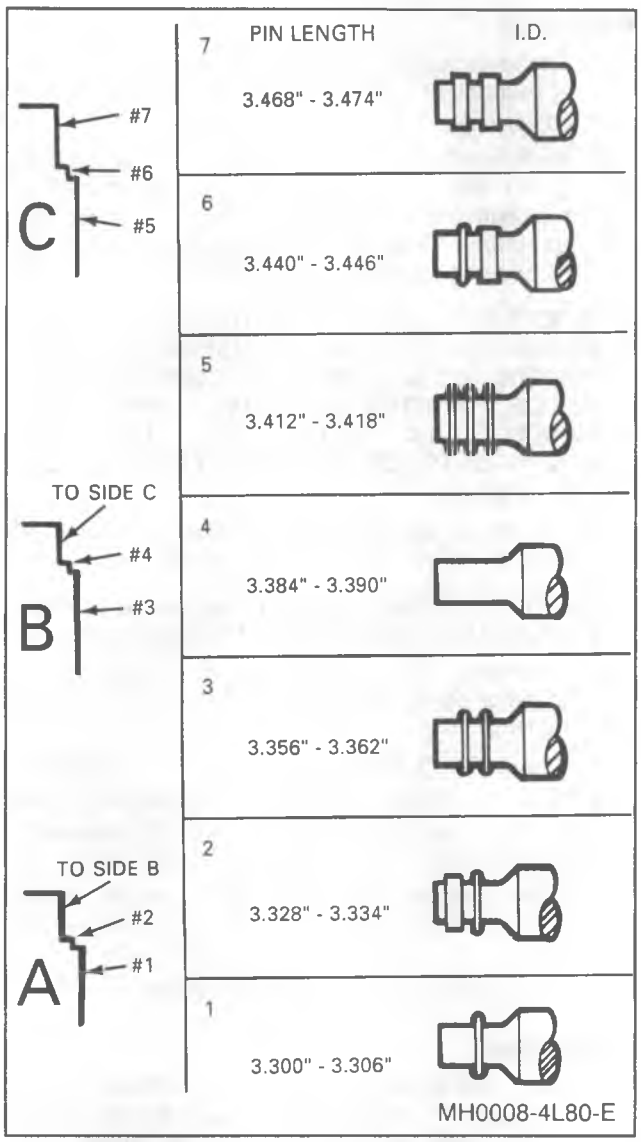

Figure 77—Band Apply Pin Selection Chart

ACCUMULATOR HOUSING ASSEMBLY

Remove or Disconnect (Figure 78)

1. Bolts (53).
2. Bolt (52).
3. Accumulator housing assembly.
4. Gasket accumulator housing (47).
5. Spacer plate (46).
6. Gasket (45) valve body spacer.
7. Gasket (48) accumulator housing to spacer plate.

Install or Connect (Figure 78)

1. Guide pins into valve body.
2. Gasket (45) valve body to spacer plate.
3. Spacer plate (46).
4. Gasket (47) accumulator housing to spacer plate.
5. Accumulator housing assembly (51) onto valve body assembly (44).
6. Five bolts (53) and one long bolt (52) through accumulator housing into valve body assembly.
7. Remove guide pins.

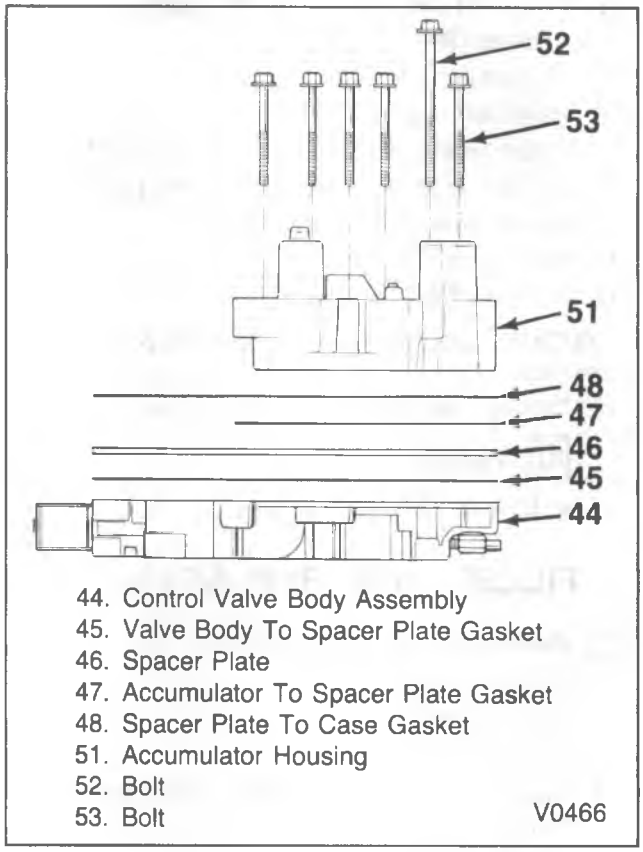

Figure 78—Accumulator Housing

PARKING LOCK PAWL AND ACTUATOR REPLACEMENT

Remove or Disconnect (Figures 79 and 80)

1. Nut (712) and pin (709).
2. Detent lever (711) and actuator Assembly (710).
3. Bolts (714) and parking pawl bracket (713).
4. Spring (705) and parking pawl return spring plug (706).
5. Plug (701) using modified screw extractor.
6. Parking pawl shaft retainer (704), shaft (702) and pawl (703).
7. Seal (707) and manual shaft (708).
8. Two speed sensors (81).

Inspect

1. Parking pawl (703) for cracks, burrs, damage.
2. Parking pawl shaft (702) for damage and freeness of fit.
3. Parking pawl return spring (705) for distortion or damage.
4. Detent lever (711) and actuator (710) for:
   - damage or cracks.
5. Manual shaft (708) for damage.

Install or Connect (Figures 79 and 80)

1. Pawl shaft (702).
2. Parking pawl (703).
3. Plug (701) (using 5/16 rod) with loctite.
4. Retainer (704).
5. Stud return spring (706).
6. Pawl return spring (705).
7. Detent lever (711) to actuator assembly (710).
8. Actuator assembly (710) over parking pawl (703).
9. Manual shaft (708) and seal (707).
10. Nut (712) on shaft (708).
11. Roll pin (709).

NOTICE: See "Notice" on page 7A2-1 of this section.

12. Parking lock bracket (713) with two bolts (714).

Tighten

- Bolts to 23 N•m (17 ft. lbs.).

FILLER TUBE REPLACEMENT

Remove or Disconnect (Figure 81)

- Raise the hood.
1. Fluid indicator (421).
2. Tube brace bolt (423).
- Raise the vehicle and support it with suitable safety stands.
3. Dipstick tube (424).
4. Seal (426) from the transmission (2).

Install or Connect (Figure 81)

1. Seal (426) into the transmission (2).
2. Dipstick tube (424).
- Lower the vehicle.
3. Tube brace bolt (423).
4. Fluid indicator (421).
- Close the hood.

TRANSMISSION COOLER FLUSHING

Transmission oil cooler flushing must be performed whenever a transmission is removed for service. It is essential to flush the oil cooler after transmission installation, after a major overhaul, if fluid contamination is suspected, or in any case of pump or torque converter replacement.

To ensure the complete transmission system service it is recommended that the flush procedure be performed after the overhauled or replacement assembly has been reinstalled in the vehicle.

Tools Required:

J 35944 Cooler Flushing Tool

J 35944-20 or J 35944-CSE Biodegradable Flushing Solution

Preparation

1. After overhauled or service replacement transmission is reinstalled in the vehicle, do not reconnect oil cooler pipes.
2. Remove fill cap on J 35944 and fill can with 0.6 liter (20-21 ounces) of flushing solution. Do not overfill or tool will need to be recharged with air before backflush. Follow manufacturer's suggested procedures for proper handling of solution.

IMPORTANT: DO NOT SUBSTITUTE WITH ANY OTHER SOLUTION. THE FLUSHING TOOL IS DESIGNED TO USE ONLY THIS CONCENTRATE. USE OF ANY OTHER SOLUTION CAN RESULT IN DAMAGE TO THE TOOL, COOLER COMPONENTS, OR IMPROPER FLUSHING OF THE COOLER.

3. Secure fill cap and pressurize the flusher can with shop air to 550-700 kPa (80-100 psi).

CAUTION: Shop air supply must be equipped with a water/oil filter and not exceed 825 kPa (120 psi).

4. Connect the discharge hose to the transmission end of the oil cooler pipe that goes to the top fitting at the radiator.
5. Clip discharge hose onto the oil drain container.
6. Mount the flushing tool to undercarriage of vehicle with the hook provided and connect the hose from the flushing tool to the remaining oil cooler pipe.
7. With the water valve on the tool in the off position, connect the water hose from the water supply to the tool.
8. Turn on the water supply at the faucet.

Initial Flush

9. Switch the water valve on the tool to the on position and allow the water to flow through the oil cooler for 10 seconds to remove the supply of transmission fluid in the system.

CAUTION: If water does not flow through the oil cooler (system is completely plugged) do not continue flushing procedure. Turn the water off immediately and inspect the pipes and cooler for restriction. Replace the oil pipe(s) and/or cooler.

10. Switch the water valve on the tool to the off position and clip the discharge hose onto a five gallon pail with a lid or position a shop towel over the end of the discharge hose to prevent splash. Discharge will foam vigorously when solution is introduced into water stream.
11. Switch the water valve on the tool to the on position and depress the trigger to mix flushing solution into the water flow. Use the bale clip provided on the handle to hold the trigger down.
12. Flush oil cooler with water and solution for two minutes. During this flush, attach the air supply to the air valve located on plumbing of tool for 3 to 5 seconds at the end of every 15-20 second interval to create a surging action.

CAUTION: Shop air supply must be equipped with a water/oil filter and not exceed 825 kPa (120 psi).

13. Release the trigger and switch the water valve on the tool to the off position.
14. Disconnect both hoses from the oil cooler pipes.

Backflush

15. Connect hoses to the oil cooler pipes opposite from the initial flush procedures to perform a backflush.
16. Repeat steps 11 and 12.
17. Release the trigger and allow water only to rinse the oil cooler for one minute.
18. Switch the water valve on the tool to the off position and turn the water supply off at the faucet.
19. Attach air supply to the air valve located on plumbing of tool and dry the system out with aikkr for at least two minutes, or longer if moisture is visible exiting from the oil cooler line discharge hose. Use an air chuck clip, if available, to secure the air chuck onto the air valve for ease of operation.

NOTICE: Excessive residual moisture can cause corrosion in the oil cooler or cooler pipes and can damage the transmission. If steps 20 through 23 cannot be completed at this time, rinse the oil cooler and cooler pipes with transmission fluid. Complete steps 20 through 23 after reinstallation of transmission.

20. Connect the cooler feed pipe to the transmission bottom connector.
21. If not already connected, attach the discharge hose to the cooler return pipe (top connector) and place into an appropriate drain container.
22. After filling the transmission with automatic transmission fluid, start the engine and run for 30 seconds. This will remove any residual moisture from the oil cooler and cooler pipes, protect all components from corrosion and check flow rate through the cooler. A minimum of two (2) quarts must be obtained during this 30 second run. If fluid flow is insufficient, check the fluid flow out of the transmission by disconnecting the oil cooler feed line at the radiator and restarting the engine. Do the following according to flow rate:

    Insufficient Feed Flow: Inspect the transmission for cause.

    Sufficient Feed Flow: Inspect oil cooler lines and fittings for restrictions or leaks and repeat the oil cooler flushing procedure. Repeat the check of fluid flow out the return line and if flow is still inhibited, replace the oil cooler.
23. Remove discharge hose, reconnect cooler return pipe to transmission and refill unit to proper fluid level.

Tool Cleaning – Every Third Use

24. Disconnect the water supply hose from the tool.
25. Bleed air pressure from the can, remove fill cap, return any unused solution to container, and rinse the can out with water. Do not store tool with solution in tank.
26. Loosen large coupling nut and remove plumbing from tank.
27. Remove screen from plumbing and wash with water.

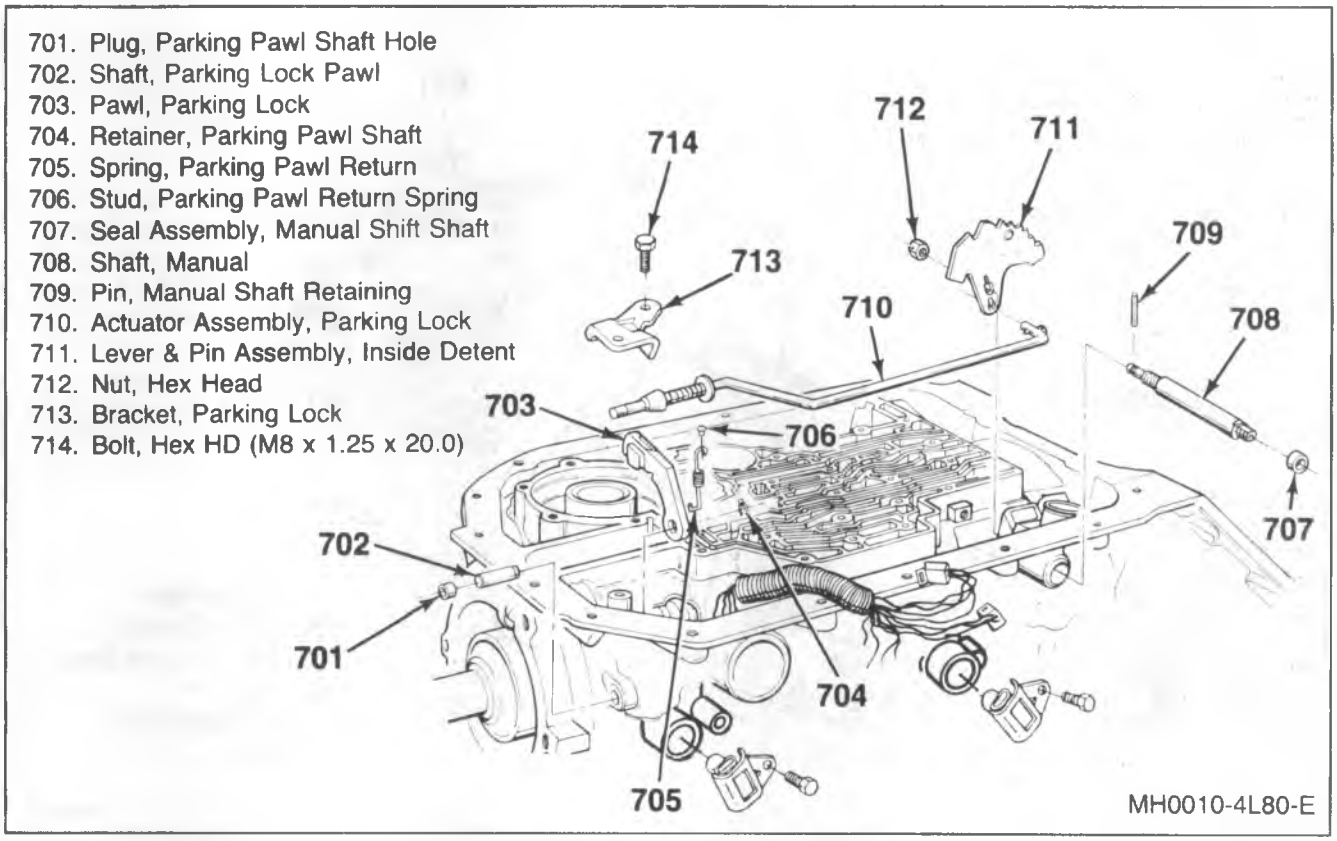

Figure 79 – Installing Park Lock Assembly

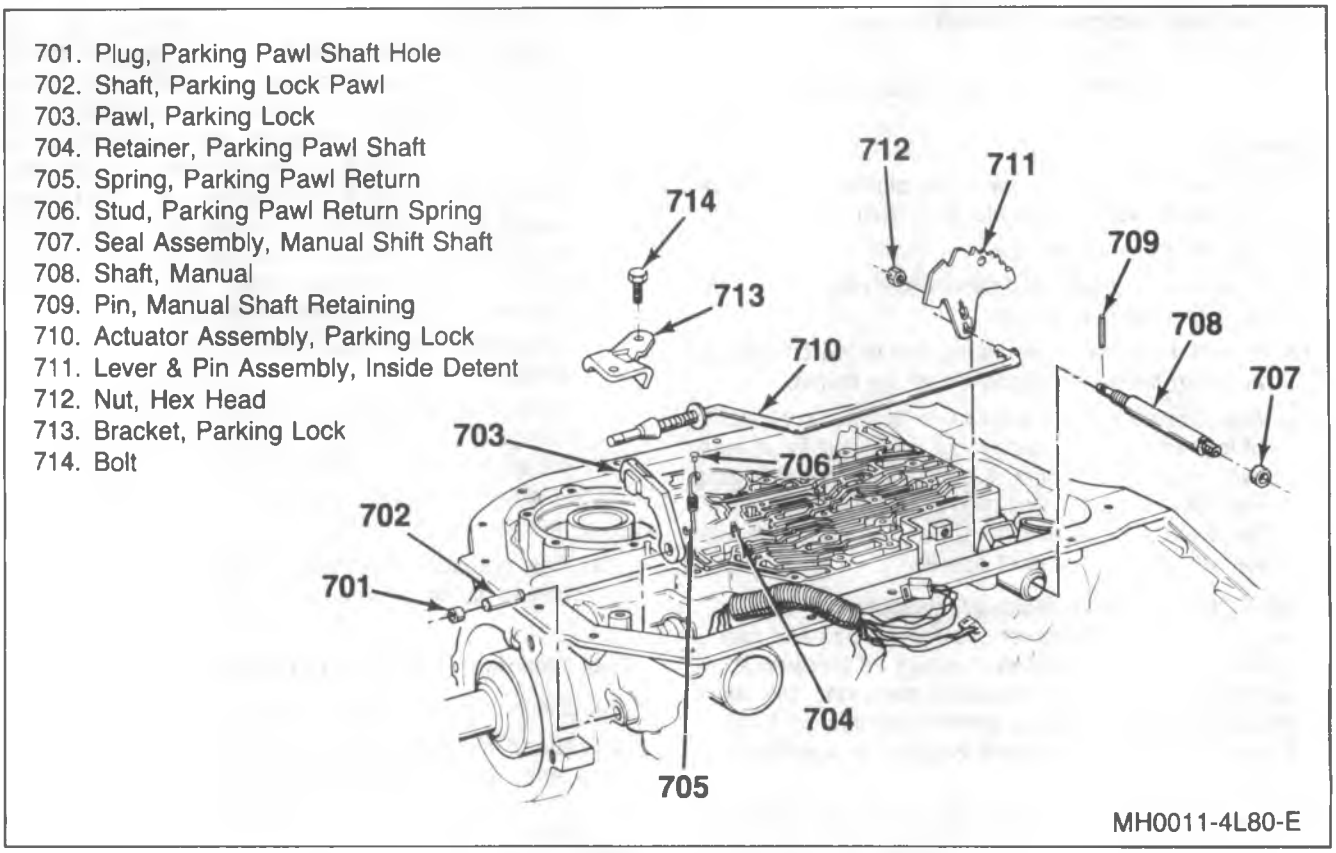

Figure 80 – Park Lock Pawl and Actuator Assembly

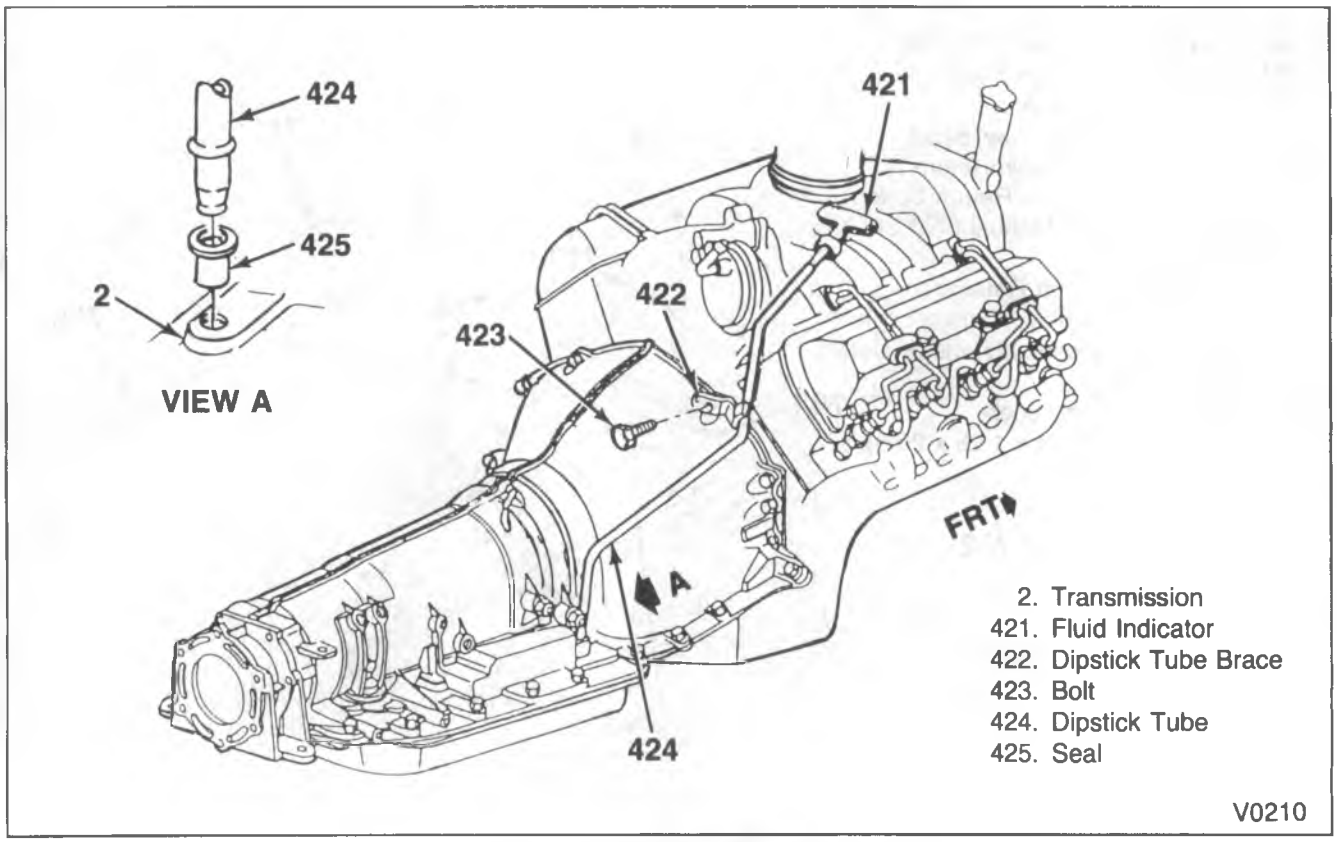

Figure 81 – Filler Tube Replacement

28. Use the cleaning pin to remove any material in the solution orifice. Orifice is located in plumbing below screen.
29. Reconnect the plumbing and fill can half with water, secure the fill cap, and pressurize the can to 550-700 kPa (80-100 psi).
30. Aim tool into the five gallon pail or floor drain and depress trigger to allow water from the can to flow through the solution orifice for 30 seconds to ensure proper cleaning.
31. Bleed air pressure from can, remove the fill cap, and empty the can.
32. Reconnect fill cap flushing tool.

SPECIFICATIONS

Fastener Application	Assembly Torque			Recheck Torque		
	N•m	Lb. Ft.	Lb. In.	N•m	Lb. Ft.	Lb. In.
Temperature Sensor to Valve Body	4	—	35	4 min.	—	35 min.
Solenoid to Valve Body Screw	9	—	80	5 min.	—	44 min.
Control Valve Assembly To Case Screw	11	—	97	8 min.	—	71 min.
Oil Test Hole Plug	11	—	97	8 min.	—	71 min.
Flywheel Housing Cover to Transmission Screw	7	—	62	7 min.	—	62 min.
Pump Body to Cover Screw	24	18	—	20 min.	15 min.	—
Pump Assembly to Case Screw	24	18	—	20 min.	15 min.	—
Rear Servo Cover to Case Screw	24	18	—	20 min.	15 min.	—
Force Motor Bracket to Valve Body Screw	8	—	71	5 min.	—	44 min.
Parking Pawl Bracket to Case Screw	24	18	—	20 min.	15 min.	—
Accumulator Housing to Valve Body Screw	11	—	97	8 min.	—	71 min.
Fourth Clutch Screw	16	12	—	15 min.	—	133 min.
Pan to Case Screw	24	18	—	15 min.	—	133 min.
Extension Housing to Case Screw	34	25	—	27 min.	20 min.	—
Manual Shaft to Detent Lever Nut	24	18	—	20 min.	15 min.	—
Speed Sensor to Case Screw	11	—	97	8 min.	—	71 min.
Case Center Support Screw	31	23	—	27 min.	20 min.	—
Flywheel to Converter Screw	44	32	—	44 min.	32 min.	—
Transmission Case to Engine Screw	44	32	—	44 min.	32 min.	—
Cooler Pipe Connector Nut at Case & Radiator	38	28	—	35 min.	26 min.	—
Valve Body to Case/Lube Pipe	11	—	97	8 min.	—	71 min.
Engine Rear Mount to Transmission Bolt	44	32	—	44 min.	32 min.	—
Engine Rear Support Bracket to Frame Nut	44	32	—	44 min.	32 min.	—
Valve Body to Case/PSM	11	—	97	8 min.	—	71 min

GMTB-3181-2A

SPECIFIACTIONS (CONT.)

LUBRICATION

Capacity		
—Pan Removal	4 l.	9 pts.
—Overhaul	10 l.	22 pts.
Type Recommended DEXRON® II		

TB-3179-2A

SPECIAL TOOLS

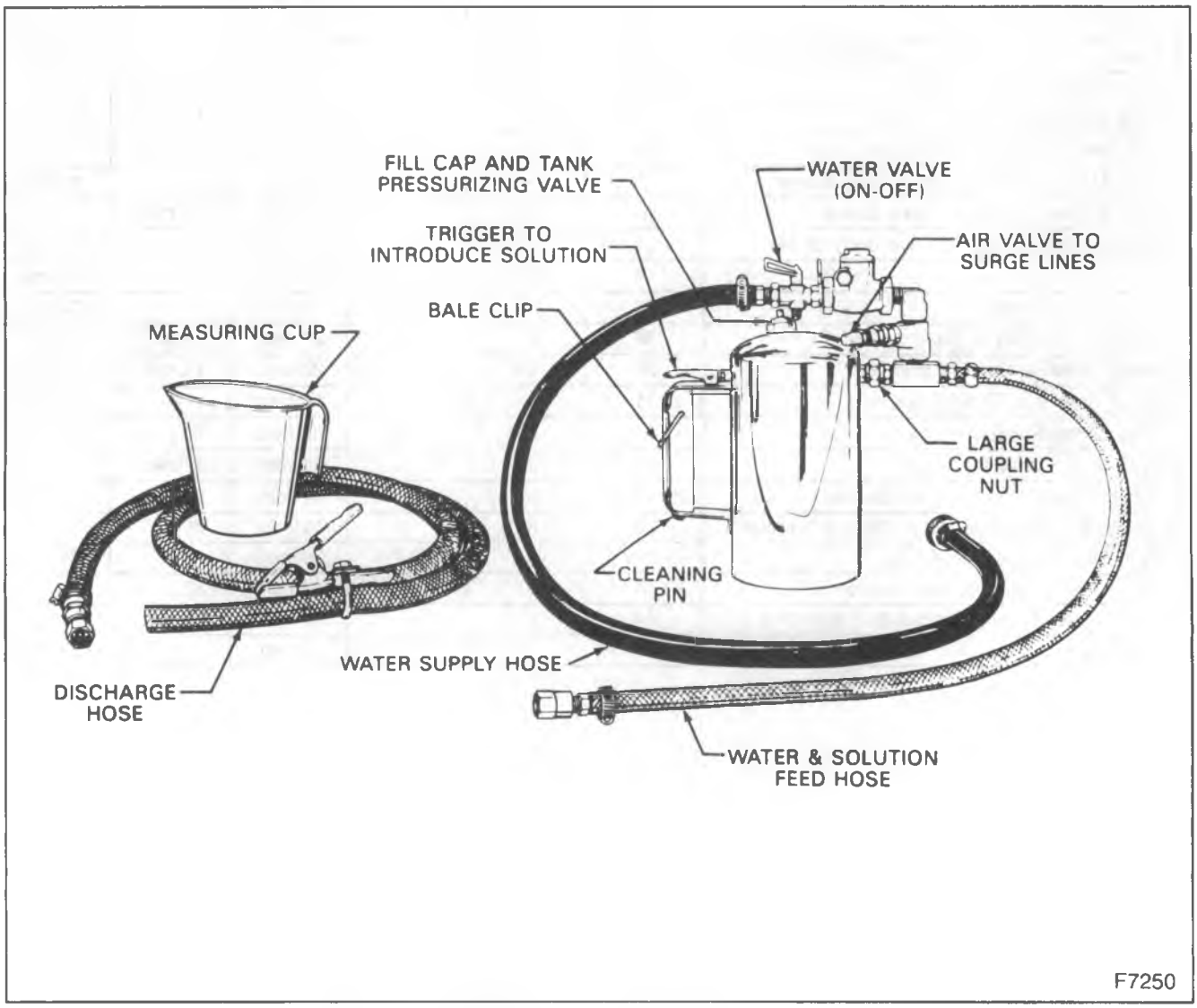

Figure 82 – Cooler Flushing Tool

SPECIAL TOOLS (CONT.)

Pump & Valve Pin Dial Indicator Stand Set

J 25025-B

Band to Apply Pin Gauge (Used with J 21370-6)

J 21370-10

Band to Apply Pin Assembly

J 38737

Extension Housing Seal Installer (Fixed Yoke)

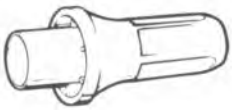

J 38694

Converter Holding Strap

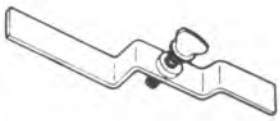

J 21366

Extension Housing Seal Installer (Slip Yoke)

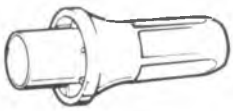

J 38869

V0209

SECTION 7A4
ELECTRONIC TRANSMISSION CONTROL
(USING TECH 1 ("SCAN" TOOL) DIAGNOSTICS)
CONTENTS

General Information 7A4-2
Visual/Physical Inspection 7A4-2
Electro Static Discharge 7A4-2
Electrostatic Discharge Damage 7A4-2
Basic Electric Circuits 7A4-3
Driveability Symptoms 7A4-3
General Description 7A4-3
ALDL Connector 7A4-3
Wiring Harness and Connectors 7A4-3
Information Sensors 7A4-3
Powertrain/Transmission Control Module 7A4-3
Diagnosis 7A4-4
Clearing Codes 7A4-4
PCM/TCM Intermittent Codes or Performance 7A4-4
Code Identification and Default Action . . . 7A4-5
Tech 1/Scan Tool 7A4-5B
PROM 7A4-5B
MEM-CAL (PCM) 7A4-6
Fuel Control (All Gas Engines) 7A4-6
Input Information 7A4-6
Coolant Temperature Sensor (CTS) 7A4-6
Transmission Temperature Sensor (TTS) . 74A-6
Throttle Position Service (TPS) 7A4-7
Input/Output Sensor 7A4-8
Transmission Range (PSM) 7A4-8
Brake Signal 7A4-8
Ratio 7A4-8
Turbine Speed 7A4-9
Overdrive Ratio 7A4-9
Combined Ratio 7A4-9
Slip 7A4-9
Outputs: Electric Transmission Controls Operated by the PCM/TCM 7A4-10
Shift Solenoid "A" 7A4-10
Shift Solenoid "B" 7A4-10
Force Motor 7A4-10
Torque Converter Clutch (TCC) Solenoid 7A4-11
Diagnostics 7A4-11
On-Vehicle Service 7A4-11
Chart A-1
No "Service Eng Soon"/"Trans" Light . . 7A4-12
Chart A-2
No ALDL Data or Won't Flash Code 12 . . 7A4-14
Code 14 - Coolant Temperature Sensor (CTS) Circuit (High Temp.) 7A4-16
Code 15 - Coolant Temperature Sensor (CTS) Circuit (Low Temp.) 7A4-18
Code 21 - TPS Circuit (Signal Voltage High) Circuit All Gas Engines 7A4-20
Code 21 - TPS Circuit (Signal Voltage High) 6.2L Diesel Engines & 4L80E Trans 7A4-22
Code 22 - TPS Circuit (Signal Voltage Low) All Gas Engines 7A4-24
Code 22 - TPS Circuit (Signal Voltage Low) 6.2L Diesel Engines & 4L80E Trans 7A4-26
Code 24 - Output Speed Sensor (All except C/K) 2 Wheel Drive 7A4-28
Code 24 - Output Speed Sensor (C/K) 2 Wheel Drive 7A4-30
Code 24 - Output Speed Sensor (C/K) All 4 Wheel Drive Vehicles 7A4-32
Code 28 - Pressure Switch Manifold Fault . . 7A4-34
Code 39 - Torque Converter Clutch (TCC) Stuck "OFF" 7A4-36
Code 53 - System Voltage High 7A4-38
Code 58 - Transmission Temperature Sensor Circuit (High Temperature Indicated) 7A4-40
Code 59 - Transmission Temperature Sensor Circuit (Low Temperature Indicated) 7A4-42
Code 68 - Overdrive Ratio Error 7A4-44
Code 73 - Force Motor Current 7A4-46
Code 75 - System Voltage Low 7A4-48
Code 81 - QDM Fault (Solenoid "B") 7A4-50
Code 82 - QDM Fault (Solenoid "A") 7A4-52
Code 83 - TCC QDM Fault 7A4-54
Code 85 - Undefined Ratio 7A4-56
Code 86 - Shift Solenoid "B" Stuck "ON" . . 7A4-58
Code 87 - Shift Solenoid "B" Stuck "OFF" . 7A4-60
Output Speed Sensor Circuit Check (2 Wheel Drive) Except C/K 7A4-62
Output Speed Sensor Check (2 Wheel Drive C/K Models) 7A4-64
Output Speed Sensor Check (4 Wheel) . . . 7A4-66
Input Speed Sensor Circuit Check 7A4-68
Brake Signal Circuit Check 7A4-70
TCC Circuit Check 7A4-72
Shift Solenoid "A" Circuit Check 7A4-74
Shift Solenoid "B" Circuit Check 7A4-76

Force Motor Circuit Check 7A4-78
PCM Wiring Diagram (All Gas) (1 of 5) 7A4-80
TCM Wiring Diagram (6.2L Diesel) (1 of 3) . 7A4-85
PCM Connector Terminal End View
(All Gas Engines) (1 of 2) 7A4-88
TCM Connector Terminal End View
(6.2L Diesel) (1 of 2) 7A4-90
Special Tools (1 of 2) 7A4-92

GENERAL INFORMATION

The electronic transmission control system has a computer that monitors a number of engine and vehicle functions then uses the data to control the following operations:

- Transmission converter clutch engagement
- Upshift pattern
- Downshift pattern
- Line pressure to control shift quality

The computer used with Throttle Body Injected (TBI) gasoline engines is called a Powertrain Control Module (PCM) and controls a number of engine functions (Figure 1) such as: fuel control, exhaust gas recirculation, and ignition timing, in addition to the above transmission functions. For further information about these systems refer to the "Fuel and Emissions Service Manual." The computer used with diesel engines is called a Transmission Control Module (TCM) and controls only transmission functions. The diagnosis in this section assumes the availability of a "Scan" tool to interface with the powertrain or transmission control module.

VISUAL/PHYSICAL INSPECTION

One of the most important checks that must be done as part of any diagnostic procedure is a careful visual/physical inspection. This can often lead to correcting a problem without further steps. Inspect all transmission control wires for correct and good connections, burned or chafed spots, pinched wires, or contact with sharp edges or hot exhaust pipes. The visual/physical inspection is important. It must be done carefully and thoroughly.

The importance of this step cannot be stressed too strongly - it can lead to correcting a problem without further checks and can save valuable time.

ELECTRO STATIC DISCHARGE

Electrostatic Discharge Damage

Electronic components used to control systems are often designed to carry very low voltage, and are very susceptible to damage caused by electrostatic discharge. It is possible for less than 100 volts of static electricity to cause damage to some electronic components. By comparison, it takes as much as 4,000 volts for a person to even feel the zap of a static discharge.

There are several ways for a person to become statically charged. The most common methods of charging are by friction and by induction. An example of charging by friction is a person sliding across a car seat, in which a charge of as much as 25,000 volts can build up. Charging by induction occurs when a person with well insulated shoes stands near a highly charged object and momentarily touches ground. Charges of the same polarity are drained off, leaving the person highly charged with the opposite polarity. Static charges of either type can cause damage, therefore, it is important to use care when handling and testing electronic components.

NOTICE: To prevent possible Electrostatic Discharge damage:

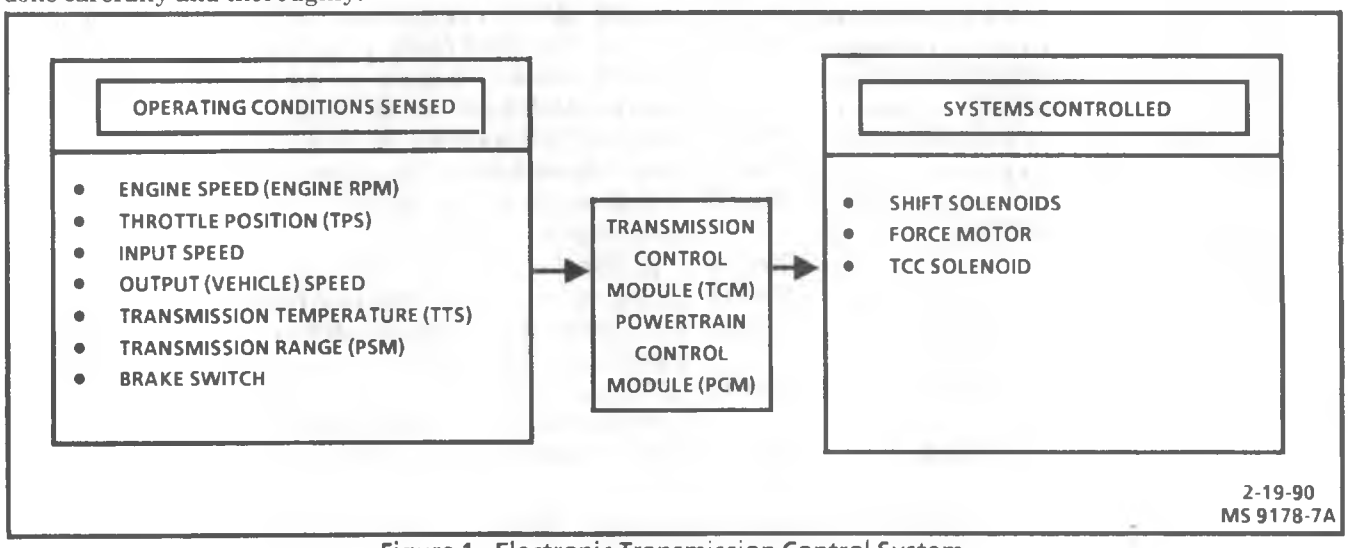

Figure 1 - Electronic Transmission Control System

- Do Not touch the PCM/TCM connector pins or soldered components on the PCM/TCM circuit board.
- When handling a PROM, CAL-PAK or MEM-CAL, Do Not touch the component leads, and Do Not remove integrated circuit from carrier.
- Be sure to follow the guidelines listed below if servicing any of these electronic components.
  1. Do not open the replacement part package until it is time to install the part.
  2. Avoid touching electrical terminals of the part.
  3. Before removing the part from its package, ground the package to a known good ground on the vehicle.
  4. Always touch a known good ground before handling the part. This step should be repeated before installing the part if the part has been handled while sliding cross the seat, while sitting down from a standing position, or while walking a distance.

BASIC ELECTRIC CIRCUITS

An understanding of the basic theory of electricity is required to diagnose the electronic transmission controls. You should know the meaning of volts, amps, and ohms and what happens in a circuit with an open or shorted wire. The ability to read and understand wiring diagrams and schematics is also essential. A short to ground is referred to as a ground to distinguish it from a short between wires. The diagnostic procedures found in this section assume that the vehicle worked right at one time and the problem is due to time, wear, dirt or other causes.

DRIVABILITY SYMPTOMS

Driveability symptom diagnosis charts both internal and electric may be found in Section "7A2."

GENERAL DESCRIPTION

ALDL CONNECTOR

The Assembly Line Diagnostic Link (ALDL) twelve terminal connector is wired to the PCM/TCM and is located in the passenger compartment under the left side of the instrument panel. This connector has terminals that diagnose the system by means of a jumper wire or "Scan" tool.

The following terminals are used in conjunction with electronic transmission control diagnosis.

A. This terminal provides a ground circuit for other terminals.

B. This terminal is the "diagnostic" terminal for the PCM/TCM. When grounded to terminal "A" with the key "ON," engine "OFF," the transmission or "Service Engine Soon" light located on the instrument panel will flash diagnostic codes.

M. This is the serial data line and is used by the "Scan" tool to communicate with the PCM/TCM and read various system data.

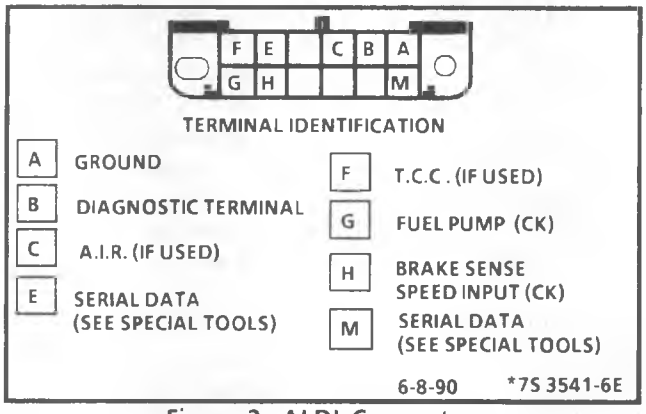

Figure 2 - ALDL Connector

WIRING HARNESS AND CONNECTORS

A wiring harness electrically connects the PCM/TCM to various sensors, solenoids and relays within the system. Many of the connectors used are environmentally protected because of the systems low voltages and current levels.

INFORMATION SENSORS

The PCM/TCM uses the following information sensors to gather data for electronically controlling transmission functions.

- Transmission temperature sensor
- Coolant Temperature Sensor (CTS)
- Engine speed sensor (diesel only)
- Transmission input speed sensor
- Transmission output speed sensor
- Pressure switch manifold
- Brake switch

POWERTRAIN/TRANSMISSION CONTROL MODULE

The PCM/TCM is located in the passenger compartment and is the control center of the electronic transmission control system.

The PCM/TCM constantly looks at information from the various sensors, and controls the systems that affect transmission and vehicle performance. By recognizing operational problems the PCM/TCM is able to perform a diagnostic function and flash codes which identify problem areas, thus aiding the technician in making repairs.

The PCM/TCM is designed to process the various inputs and then respond by sending the appropriate electrical signals to control transmission upshift, downshift, shift feel and torque converter clutch engagement.

Diagnosis

NOTICE: The PCM/TCM must be maintained at a temperature below 185°F (85°C) at all times. This is most essential if the vehicle is put through a paint baking process. The PCM/TCM will become inoperative if its temperature exceeds 185°F (85°C). Therefore, it is recommended that temporary insulation be placed around the PCM/TCM during the time the vehicle is in a paint oven or other high temperature process.

The PCM/TCM is equipped with a self diagnostic feature that detects system failures and aids the technician in locating a faulty circuit via a code. The PCM/TCM has a memory and knows what readings, from the various inputs, should be under specific conditions. These conditions are described on the facing page of each code chart. If a reading is not what the PCM/TCM is programmed to accept, it will store a code and assume any appropriate default actions or values.

In addition, a diagnostic circuit check is provided to verify that the PCM/TCM is able to store and flash codes. When the "diagnostic" terminal in the ALDL connector is grounded, with the key "ON" engine "OFF," Code 12 should flash. The PCM/TCM is actually monitoring the distributor reference circuit on gasoline engines or the engine speed sensor circuit on diesel engines. Both circuits should show 0 volt with the engine not running. If Code 12 will not flash, see CHART A-1 and CHART A-2 for diagnosis information.

NOTE: Always check for Code 12 before proceeding to diagnose any other codes. The presence of Code 12 is an indication that the PCM/TCM is able to perform the diagnostic function.

An "Intermittent" code is one which does not reset, and is not present while you are working on the vehicle. This is often cause by a poor connection. The facing page of a code chart will contain "Diagnostic Aids" to help find intermittents.

A "hard" code is one that will reset, because the condition causing the code is still present while you are working on the vehicle. The diagnostic code chart will lead you to the cause of the problem.

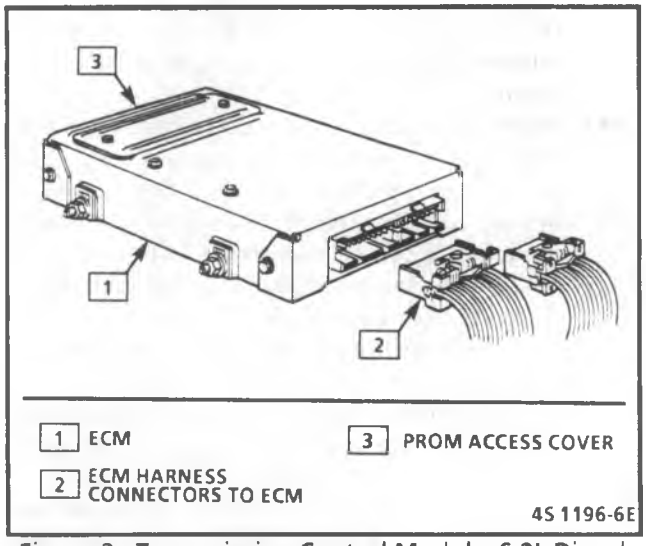

Figure 3 - Transmission Control Module 6.2L Diesel

Clearing Codes

When a code has been stored, it may be removed by removing battery voltage from the PCM/TCM for at least 30 seconds. If a code is intermittent, the PCM/TCM will resume normal operation either immediately after the fault subsides or on the next ignition cycle.

PCM/TCM INTERMITTENT CODES OR PERFORMANCE

A PCM/TCM problem may or may not store a code.

The PCM/TCM code charts, in this section, determine if there is a fault with a circuit, or, if there is an intermittent problem. The fault must be present to locate the problem. If a fault is intermittent, use of trouble code charts may result in replacement of good parts. An intermittent means that a code is stored in the PCM/TCM memory, but the circuit is OK.

- Most intermittent problems are caused by faulty electrical connections or wiring. Perform a careful check of the suspected circuits for:
  - Poor mating of the connector halves, or terminal, not fully seated in the connector body (backed out).
  - Improperly formed or damaged terminals. All connector terminals, in a problem circuit, should be carefully reformed to increase contact tension.
  - Poor terminal to wire connection. This requires removing the terminal from the connector body as outlined in this section.
- If a visual (physical) check does not find the cause of the problem, the vehicle can be driven with a voltmeter connected to a suspected circuit or a "Scan" tool may be used.

CODE IDENTIFICATION AND DEFAULT ACTION

CODE AND CIRCUIT	PROBABLE CAUSE	DEFAULT ACTION
14 Engine Temperature High	Signal voltage has been above 130°C (270°F) for 1 second.	• TCC apply cold. • Loss of driveability.
15 Engine Temperature Low	Signal voltage has been less than -33°C (-27°F) for 1 second.	• TCC apply cold. • Loss of driveability.
21 Throttle Position High	Code 21 will set if signal voltage has been above 4.9 volts for 1 second.	• Set line pressure to maximum. • Fixed shift points. • Inhibit 4th gear. • Inhibit TCC operation.
22 Throttle Position Low	Code 22 will set if TPS signal voltage is below .06 volt for more than 1 second.	• Set pressure to maximum. • Fixed shift points. • Inhibit 4th gear. • Inhibit TCC operation.
24 Output Speed Low	With input speed at least 3000 rpm, output speed must read less than 200 rpm.	• Set pressure to maximum. • Allow 4–3, 3–2, and 1–2 shifts, then maintain 2nd gear. • Calculate output speed from input speed.
28 Pressure Switch Manifold	PCM/TCM must see one of two "illegal" combinations from the pressure switch manifold.	• Assume Ⓓ Drive 4 is selected. • Inhibit 4th gear operation. • Inhibit TCC operation.
39 TCC Stuck "OFF"	Code 39 sets if the TCC slip is greater than 65 rpm for 2 seconds.	• Inhibit 4th gear. • Inhibit TCC operation.
53 System Voltage High	Code 53 will set if system voltage is above 19.5 volts for 2 seconds.	• Maximum line pressure. • 2nd gear only. • Inhibit TCC operation.
58 Transmission Temperature High	Transmission temperature must be above 154°C (304°F) for 1 second.	• TCC in 2nd, 3rd, 4th gears. • Maximum line pressure.
59 Transmission Temperature Low	Transmission Temperature must be below -48°C (-54°F) for 1 second.	• TCC in 2nd, 3rd and 4th gears. • Maximum line pressure.

7-2-90
MS 9995-7A

Figure 4 - PCM/TCM Code System (1 of 2)

CODE IDENTIFICATION AND DEFAULT ACTION

CODE AND CIRCUIT	PROBABLE CAUSE	DEFAULT ACTION
68 Over Drive Ratio	Code 68 will set if the engine speed is 200 rpm higher than input speed for 2 seconds must be in 4th gear TCC engaged.	• Set Pressure to maximum
73 Force Motor Current	Code 73 sets when actual force motor current is more than 1.6 amps lower than command current.	• Maximum line pressure.
75 System Voltage Low	Code 75 will set when system voltage falls below 8.6 volts.	• Turn force motor "OFF." • Allow 4–3, 3–2, and 1–2 shifts, then maintain 2nd gear. • Inhibit TCC and 4th gear.
81 Quad Driver and Shift Solenoid "B" Fault	Code 81 will set if the PCM/TCM detects an inappropriate voltage on the shift solenoid "B" circuit.	• Shift to 2nd gear. • Inhibit TCC operation.
82 Quad Driver and Shift Solenoid "A" Fault	Code 82 will set if the PCM/TCM detects an inappropriate voltage on the shift solenoid "A" circuit.	• 2nd and 3rd gears only or 1st and 4th gears only.
83 Quad Driver and TCC Fault	Code 83 will set if an inappropriate voltage is detected on the TCC circuit.	• Inhibit 4th gear. • Inhibit TCC operation.
85 Undefined Ratio	Code 85 will set if the PCM/TCM's calculations indicate an unexpected gear ratio does not include over drive.	• Set pressure to maximum.
86 Shift Solenoid "B" Stuck "ON"	Code 86 will set if the PCM/TCM has commanded 1st or 2nd gear but a ratio calculation indicates 3rd gear.	• Set pressure to maximum.
87 Shift Solenoid "B" Stuck "OFF"	Code 87 will set if the PCM/TCM commands 3rd or 4th gear but a ratio calculation indicates 2nd gear	• Set pressure to maximum.

7-2-90
MS 9995-7A

Figure 4A - PCM/TCM Code System (2 of 2)

An abnormal voltage reading, when the problem occurs, indicates the problem may be in that circuit. If the wiring and connectors check OK, and a trouble code was stored for a circuit having a sensor, substitute a known good sensor and recheck.

- Loss of code memory: To check, disconnect TPS and idle engine for about 15 seconds. Code 22 should be stored, and kept in memory when ignition is turned "OFF," for at least 10 seconds. If not, check for open in CKT 440 to the PCM/TCM. If circuit 440 has 12 volts to the PCM/TCM at all times, replace PCM/TCM.
- **CHECK:**
  - Electrical system interference caused by a defective relay, PCM/TCM driven solenoid or switch. They can cause a sharp electrical surge. Normally, the problem will occur when the faulty component is operated.
  - Improper installation of electrical options, such as light, 2-way radio, etc.
  - Ignition secondary shorted to ground
  - CKT 419 (SES light) or CKT 1234 (trans light) and CKT 451 (diagnostic test) intermittently shorted to ground.
  - PCM/TCM power and grounds for location.
  - Incorrect or defective PROM

TECH 1/SCAN TOOL

The diagnostic procedures in this manual assume the use of a "Scan" tool. Since the **Tech 1**, produced by Expertec, is able to perform functions, such as, bi-directional communication that other "Scan" tools are unable to perform, it has been made an essential tool. Although, the term "Scan" tool will continue to be used for simplicity's sake, we recommend the **Tech 1** be used when ever possible. In fact, any procedure calling for bi-directional communication with the PCM/TCM will require the use of a **Tech 1**. Explicit instructions on connecting, and using the various **Tech 1** functions are contained in the **Tech 1** owner's manual.

PROM

Information for a specific engine and vehicle is programmed using an integrated circuit called a Programmable Read-Only Memory (PROM), in the parts book, it is listed as a calibrator. This allows one model of controller to be used for many different vehicles. The PROM is located inside the TCM and has information on the vehicle's weight, engine, transmission, axle ratio, etc. While one TCM part number can be used by many vehicle lines, a PROM is very specific and must be used only with the right vehicle. For this reason, it is very important to check the latest parts book and Service Bulletin information for the correct part number when replacing a PROM.

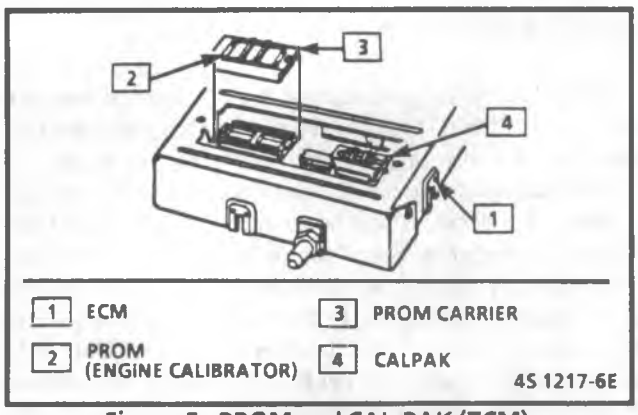

Figure 5 - PROM and CAL-PAK (TCM)

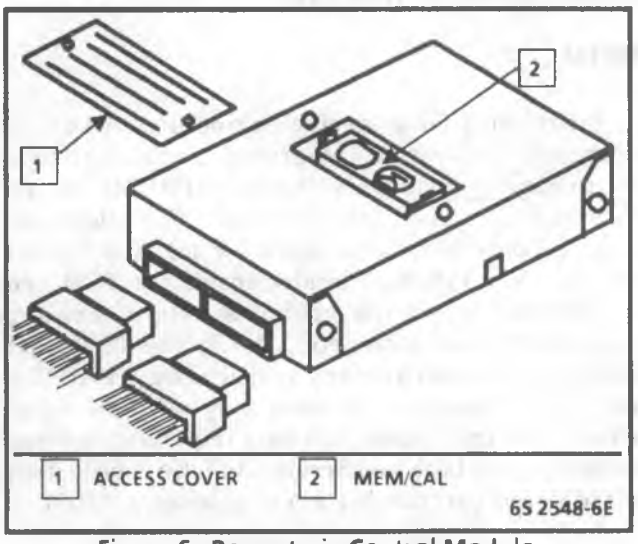

Figure 6 - Powertrain Control Module (All Gas Engines)

MEM-CAL (PCM)
Figure 5

This assembly contains both the functions of the PROM and CAL-PAK. Like the PROM, it contains the calibrations needed for a specific vehicle as well as the back-up fuel control circuitry required if the rest of the PCM becomes damaged or faulty.

FUEL CONTROL (All Gas Engines)

Fuel delivery on all gasoline engines is controlled by the Computer Control system. The general description of fuel control is in Section "4" of the fuel and emissions manual. This includes the fuel injector, pressure regulator, idle air control valve and the fuel pump electrical circuit.

INPUT INFORMATION

COOLANT TEMPERATURE SENSOR (CTS)
Figure 7

The Coolant Temperature Sensor (CTS) is a thermistor (a resistor that changes value based on

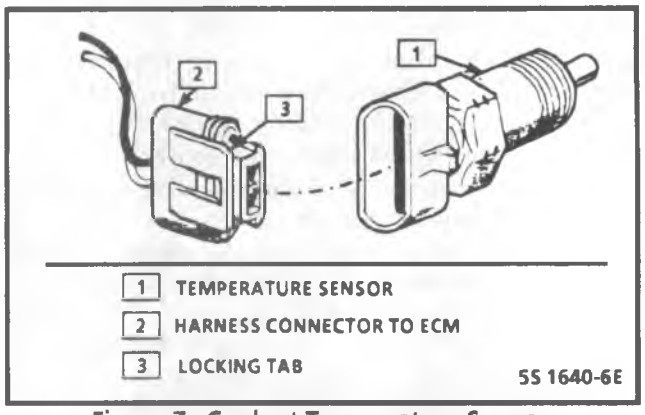

Figure 7 - Coolant Temperature Sensor

temperature) mounted in the engine coolant stream and used on gasoline engine applications only. Low coolant temperature produces a high resistance while high temperature causes a low resistance.

The PCM supplies a 5 volt signal to the Coolant Temperature Sensor (CTS) through an internal resistor then measures the voltage drop in the circuit. Voltage will be high when the engine is cold and low when the engine is hot.

The PCM uses the engine temperature sensor to delay Torque Converter Clutch (TCC) operation until the engine has warmed up.

Diagnosis

Code 14 or Code 15 indicates a failure in the coolant temperature circuit. Most "Scan" tools display engine temperature in degrees Centigrade. After the engine is started, the temperature should rise steadily to about 90°C then stabilize when the thermostat opens. If a fault occurs, the PCM/TCM will substitute a default valve at the high end of the range. Should the circuit resume normal operation, the PCM/TCM will again recognize CTS readings.

On-Vehicle Service

For specific instructions, see Section "7A2."

TRANSMISSION TEMPERATURE SENSOR (TTS)
Figure 8

The Transmission Temperature Sensor is a thermister (a resistor that changes value based temperature) mounted to the valve body. Low transmission temperature produces high resistance while high temperature produces how resistance. The PCM/TCM supplies a 5 volt signal to the transmission Temperature Sensor (TTS) through an internal resistor then measures the voltage drop in the circuit. Voltage will be high when the transmission is cold and low when the transmission is hot.

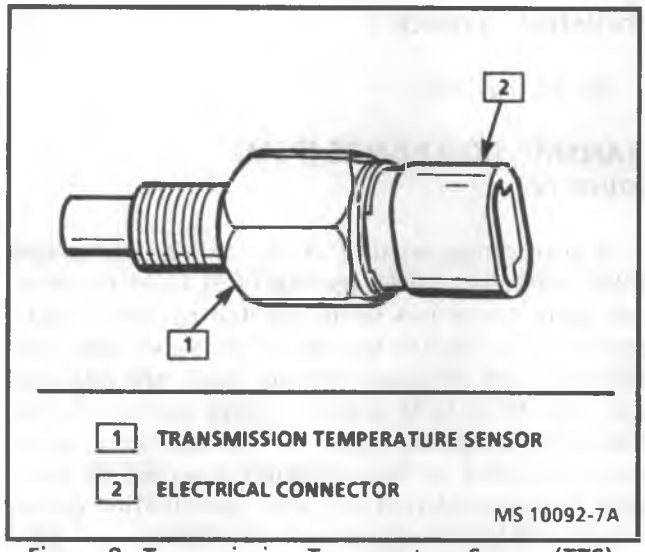

Figure 8 - Transmission Temperature Sensor (TTS)

The PCM/TCM uses the transmission temperature sensor to regulate torque converter clutch apply, as well as shift quality.

DIAGNOSIS

Code 58 and 59 indicate a fault in the Transmission Temperature Sensor circuit. Most "scan" tools will display transmission temperature in degrees Celsius. After the vehicle has been started, transmission temperature should rise steadily and stabilize between 90 and 115 degrees Celsius depending on load. Both codes will cause the PCM/TCM to use a default value of 131 degrees Celsius thus reacting as if the transmission were hot in either case. When Code 58 or 59 are set the torque converter clutch is enabled in second, third and forth and will apply early. Some drivability symptoms will be noticed especially when cold.

ON VEHICLE SERVICE

For specific instructions see Section "7A2".

THROTTLE POSITION SENSOR (TPS)
Figure 10

The Throttle Position Sensor (TPS) is mechanically connected to the throttle shaft of the TBI unit or the injector pump on diesel applications. It is a potentiometer with one end connected to 5 volts from the PCM/TCM and the other to ground. A third wire is used by the PCM/TCM to measure voltage across the TPS switch. As the throttle is depressed, voltage increases from approximately .5 to a maximum of 4.9 volts. By monitoring voltage from the TPS, the PCM/TCM can adjust the transmission shift pattern based on engine load. In a sense, the TPS has replaced the throttle cable and valve or vacuum modulator used on past model transmissions.

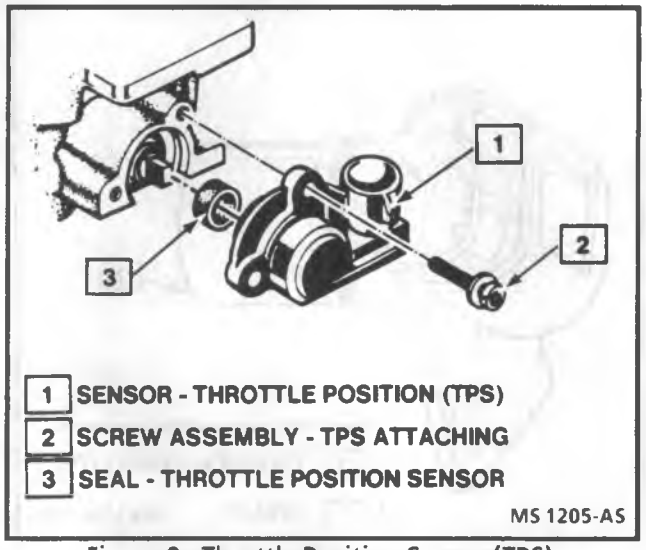

Figure 9 - Throttle Position Sensor (TPS) (All Gas Engines)

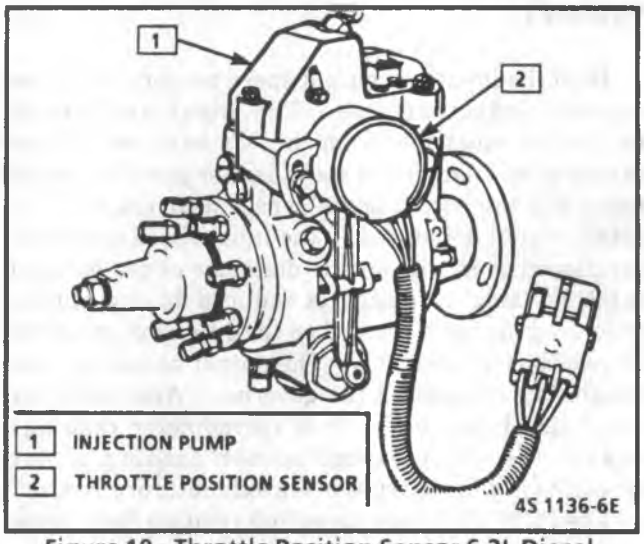

Figure 10 - Throttle Position Sensor 6.2L Diesel

Diagnosis

A "Scan" tool reads throttle position in volts and should range from below 1.25 volts at closed throttle to over 4.0 volts at Wide Open Throttle (WOT). Diesel TPS readings are in percent only.

If a fault does occur in the TPS, circuit Code 21 or Code 22 will be set and the PCM/TCM will substitute a default value. In addition, the TCC will be disabled, 4th gear will be inhibited, and the PCM/TCM will use a default value to control the force motor current.

On-Vehicle Service

For specific diesel TPS information, see Section "7A2."

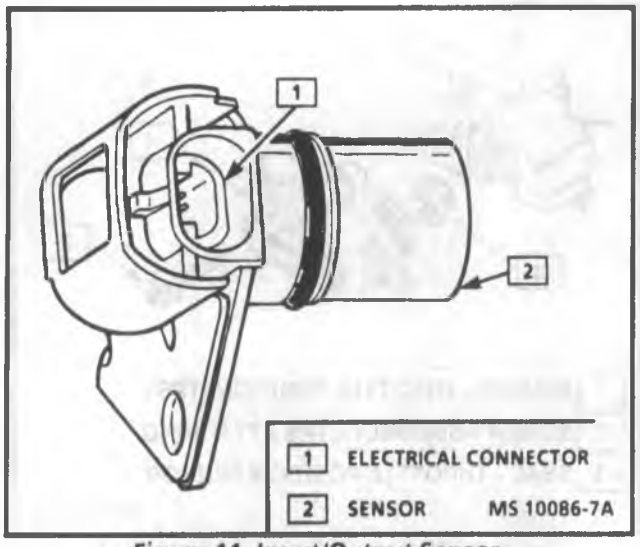

Figure 11- Input/Output Sensor

INPUT/OUTPUT SPEED SENSOR
Figure 11

Both the input and output speed sensors are of the magnetic induction type. The input and output sensors are accessible from the left hand side of the transmission. The input speed sensor just forward of center and the output speed sensor near the rear. A voltage signal is induced in the input speed sensor by serrations cut in the outside diameter of the forward clutch housing. Voltage is induced in the output sensor by gear teeth pressed on the outside diameter of the rear carrier assembly. The output sensor may be thought of as replacing the governor. Also note that output speed may differ from speedometer readings because the output speed sensor reading is not corrected for minor variations in axle ratio or tire size.

The PCM/TCM uses speed information from these sensors to determine the following:

- Engine is running
- Vehicle speed
- Calculate gear ratio
- Calculate TCC slip
- Calculate turbine speed

Diagnosis

If the Input speed sensor is not operational at start up and reads 0, this will cause the output sensor to also read 0. There is no direct code associated with an input sensor fault, however, an inaccurate input sensor could cause other codes to set especially those associated with ratios or slip.

Code 24 will set if a fault exists in the output sensor circuit and a default value will be substituted by the PCM/TCM. As long as the fault remains and the code is set, the PCM/TCM will only allow 4-3, 3-2 and 1-2 shifts to occur. If the fault is removed, normal operation will resume after the next ignition cycle.

On-Vehicle Service

See Section "7A2".

TRANSMISSION RANGE (PSM)
Figure 12

A gear range sensing device called a pressure switch manifold is used by the PCM/TCM to sense what gear range has been selected by the vehicle operator. The PSM is located on the valve body and consists of five pressure switches combined into one unit. The PCM/TCM applies system voltage to the PSM on three separate wires. These three circuits are either grounded or open depending on which gear range has been selected and what combination of the five switches have pressure applied to them.

Diagnosis

There are two possible combinations of the switches within the pressure switch manifold that do not represent an actual gear range. If either of these combinations are detected by the PCM/TCM for .5 seconds or longer, Code 28 will set. Code 28 will not set, however, if a valid gear range combination appears at the wrong time.

While Code 28 is present, the PCM/TCM will take the following actions:

1. Assume drive 4 for shift pattern control
2. Use drive 2 pressure table
3. Inhibit 4th gear operation
4. Inhibit TCC operation

If the PSM resumes normal functioning, the transmission will resume normal operation after the next ignition cycle.

On-Vehicle Service

For specific information, see Section "7A2."

BRAKE SIGNAL

The brake switch, mounted so as to be operated by brake pedal travel, is normally closed when the brake pedal is released. When closed, the switch provides a 12 volt signal to the PCM/TCM: when open (brake applied) the PCM/TCM receives a 0 volt signal. The PCM/TCM uses the brake signal to release the Torque Converter Clutch (TCC) when the brakes are applied.

On-Vehicle Service

For specific information, see Section "7A2."

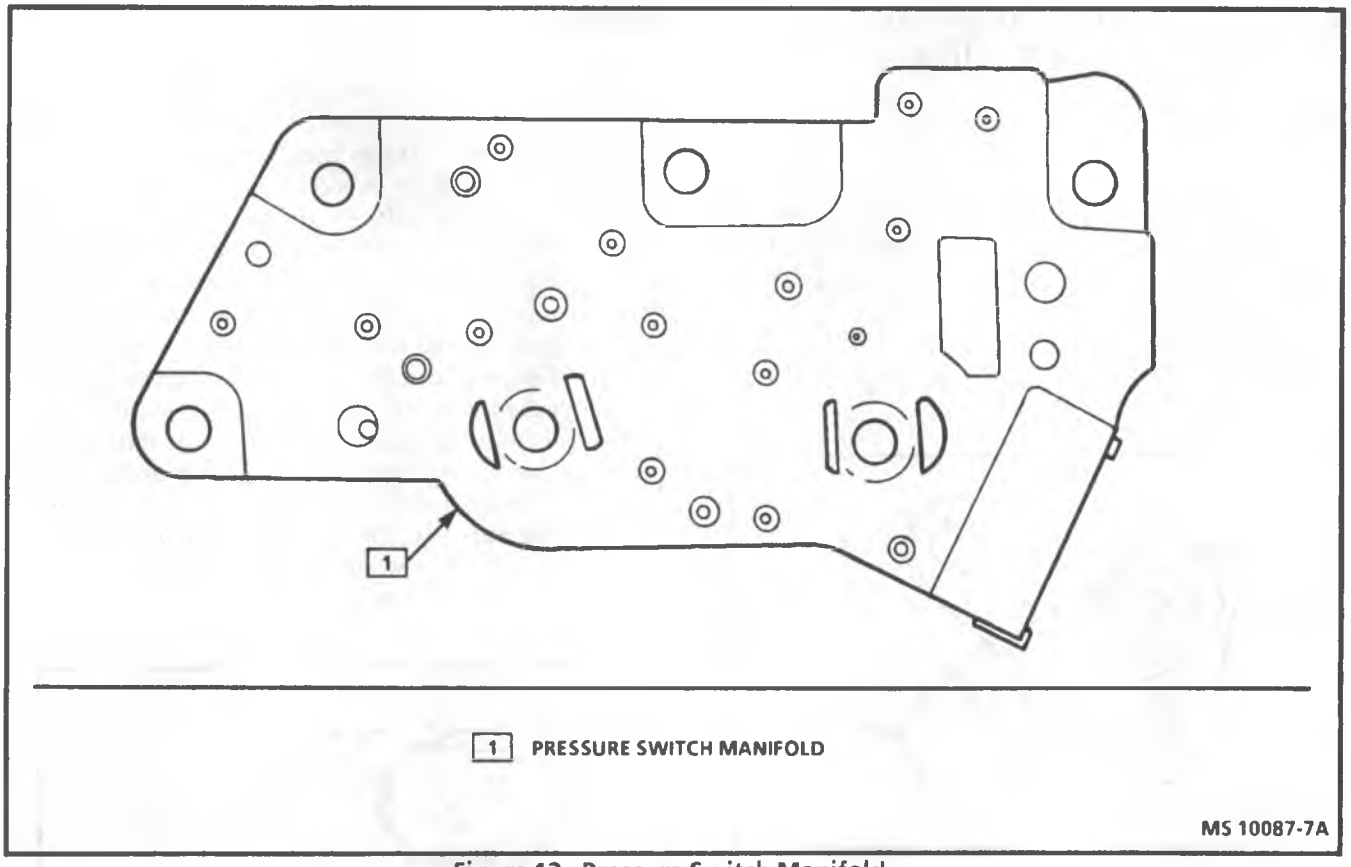

Figure 12 - Pressure Switch Manifold

RATIO

Ratio is an input calculated by the PCM/TCM from the output and input speed sensor readings.

Diagnosis

If the PCM/TCM calculates a ratio for gears 1st, 2nd and 3rd, that is inconsistent with the gear being commanded by the PCM/TCM, and the condition lasts for over 2 seconds, Code 85 (undefined ratio) will set. While Code 85 is present, line pressure (force motor current) will be set to a default value. If the undefined ratio condition goes away, normal transmission operation will resume after the next ignition cycle.

TURBINE SPEED

Turbine speed is set to input speed when the transmission is in 1st, 2nd and 3rd. When the transmission shifts into 4th, turbine speed is calculated by multiplying input speed by a precalibrated value.

OVERDRIVE RATIO

Overdrive ratio is determined from input speed and engine speed.

Diagnosis

When TCC is engaged in 4th gear, if there is more than a 200 rpm difference between engine speed and input speed for at least two seconds, Code 68 (overdrive ratio) will set.

While Code 68 is set, the following failsafe actions will be taken:

1. Inhibit 4th gear
2. Inhibit TCC operation
3. Use default value for pressure (force motor current)
4. Assume drive 4 shift pattern

The system will recover on the next ignition cycle.

COMBINED RATIO

Combined ratio is the combination of both Overdrive Ratio and Ratio. The PCM/TCM internally thinks of this as a total or Box ratio.

SLIP

Slip refers to the amount of torque converter slippage calculated from engine speed and turbine speed. The PCM/TCM uses this calculation to determine the TCC solenoid duty cycle.

)UTPUTS: ELECTRONIC TRANSMISSION :ONTROLS OPERATED BY THE PCM/TCM

;hift Solenoid "A"
'igure 13

Shift solenoid "A" is attached to the valve body and s a normally open exhaust valve. The PCM/TCM ıctivates the solenoid by grounding it through an nternal quad driver. Solenoid "A" is "ON" in 1st and ıth gear, but "OFF" in 2nd and 3rd gears. When "ON," he solenoid redirects fluid to act on the shift valves. 5olenoid "A" is usually blue in color.

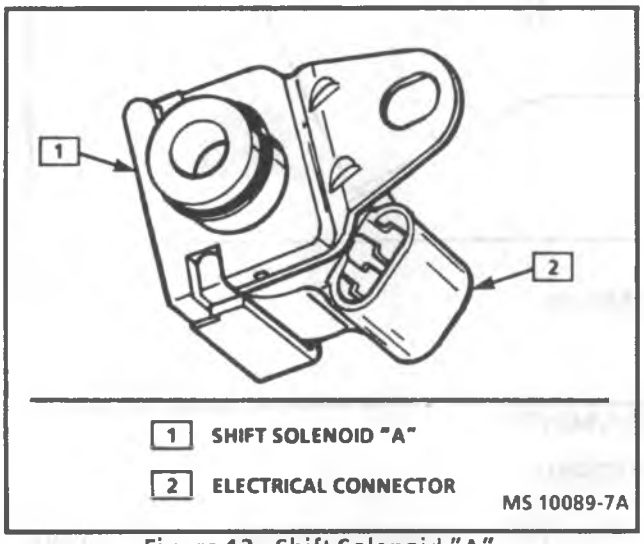

Figure 13 - Shift Solenoid "A"

Diagnosis

There is one diagnostic code associated with shift solenoid "A", Code 82 (QDM and solenoid "A" fault). The PCM/TCM continually monitors the shift solenoid "A" circuit for expected voltage ("OFF" high "ON" low). If the voltage reading is not what is expected on the circuit, Code 82 will be set. Should the fault disappear, recovery will occur on the next ignition cycle.

On-Vehicle Service

For specific information, see Section "7A2."

Shift Solenoid "B"
Figure 14

Shift solenoid "B" is attached to the valve body and is a normally open exhaust valve. The PCM/TCM activates the solenoid by grounding it through an internal quad driver. Solenoid "B" is "ON" in 3rd and 4th gear and "OFF" in 1st and 2nd gear. When "ON," the solenoid redirects fluid to act on the shift valves. Solenoid "B" is usually red in color.

Diagnosis

Solenoid "B" has three diagnostic codes associated with it. The first code is Code 81 (QDM and solenoid B fault). The PCM/TCM continually monitors the shift solenoid "B" circuit for expected voltage ("OFF" high "ON" low). If the voltage reading is not what is expected, Code 81 will set. While Code 81 is present, TCC operation will be inhibited, line pressure will be set to maximum and the transmission will not shift past 2nd gear and the transmission will not shift past 2nd gear. Recovery can occur at the next ignition cycle.

The second code is Code 87 (shift solenoid "B" stuck "OFF") and it will set when the calculated gear ratio is numerically higher than the gear commanded (must be 3rd or 4th gear). No default actions are taken.

The final code is Code 86 (shift solenoid "B" stuck "ON"). Code 86 is set when the PCM/TCM detects 1st or 2nd gear at high speed. No default actions are taken.

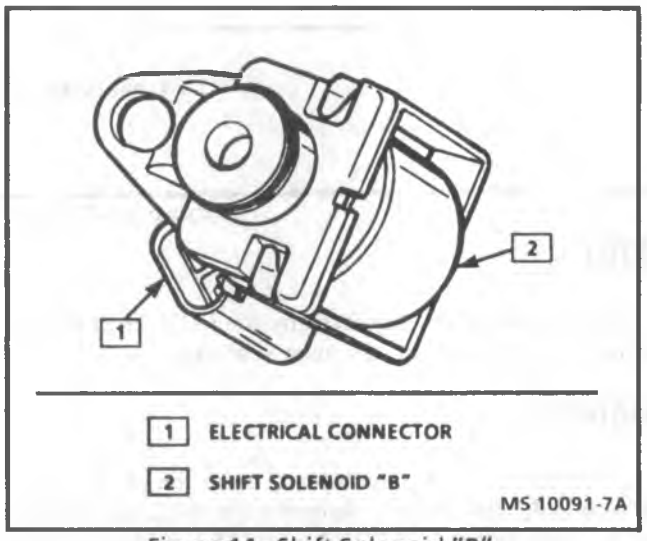

Figure 14 - Shift Solenoid "B"

On-Vehicle Service

For specific instructions, see Section "7A2".

FORCE MOTOR
Figure 15

The force motor is attached to the valve body and controls line pressure by moving a pressure regulator valve against spring pressure. The force motor takes the place of the throttle valve or vacuum modulator used on past model transmissions. The PCM/TCM varies line pressure based on engine load. Engine load is calculated from various inputs especially the TPS switch. Line pressure is actually varied by changing the amperage applied to the force motor from 0 (high pressure) to 1.1 amps (low pressure).

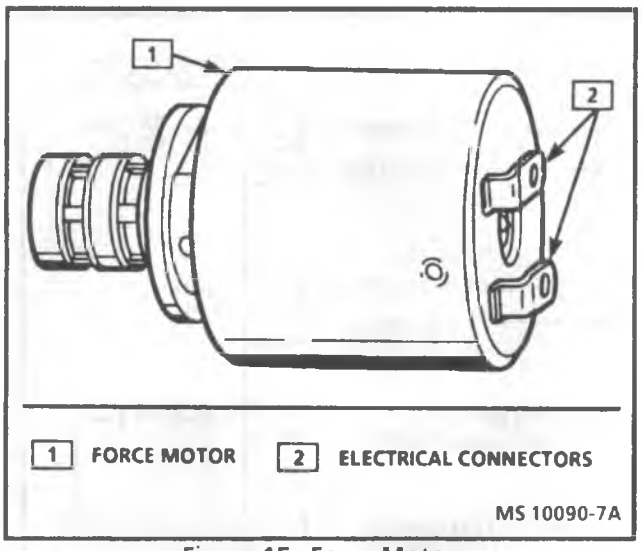

Figure 15 - Force Motor

The force motor current is periodically pulsed to prevent contamination from sticking the pressure regulator valve.

Diagnosis

There is one diagnostic code associated with the force motor, Code 73. Code 73 will set when the PCM/TCM detects a difference of .16 amp or more between the amperage commanded and actual amperage. While the code is set, the force motor will be turned "OFF." Recovery can occur after the next ignition cycle. Code 73 will not sense a stuck valve.

On-Vehicle Service

For specific information, see Section "7A2."

TORQUE CONVERTER CLUTCH (TCC) SOLENOID
Figure 16

The Torque Converter Clutch (TCC) solenoid is pulse width modulated by the PCM/TCM. Pulsing the solenoid shifts the TCC valve to modulate pressure against the Torque Converter Clutch (TCC). This modulated pressure allows the TCC to slip slightly thus keeping the TCC balanced just at the point of engagement.

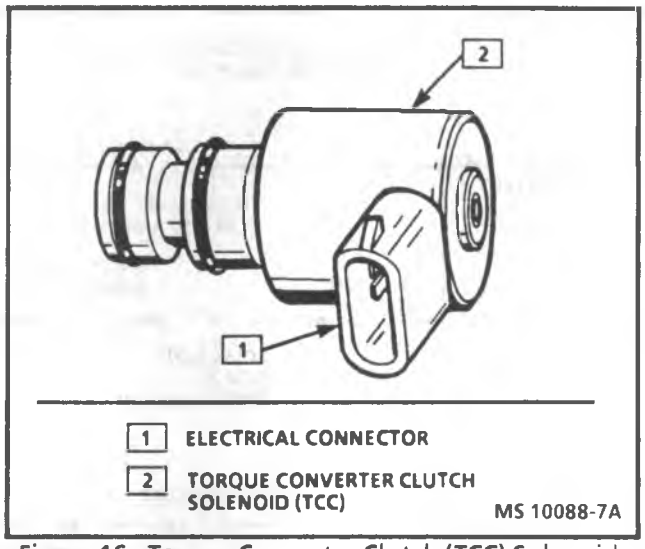

Figure 16 - Torque Converter Clutch (TCC) Solenoid

Diagnostics

There are two diagnostic codes associated with the TCC solenoid. The first code is Code 83 (quad driver fault). Code 83 is designed to detect a fault in the TCC circuit.

While Code 83 is set, both 4th gear and TCC are inhibited. Recovery can occur on the next ignition cycle.

On-Vehicle Service

For specific information, see Section "7A2".

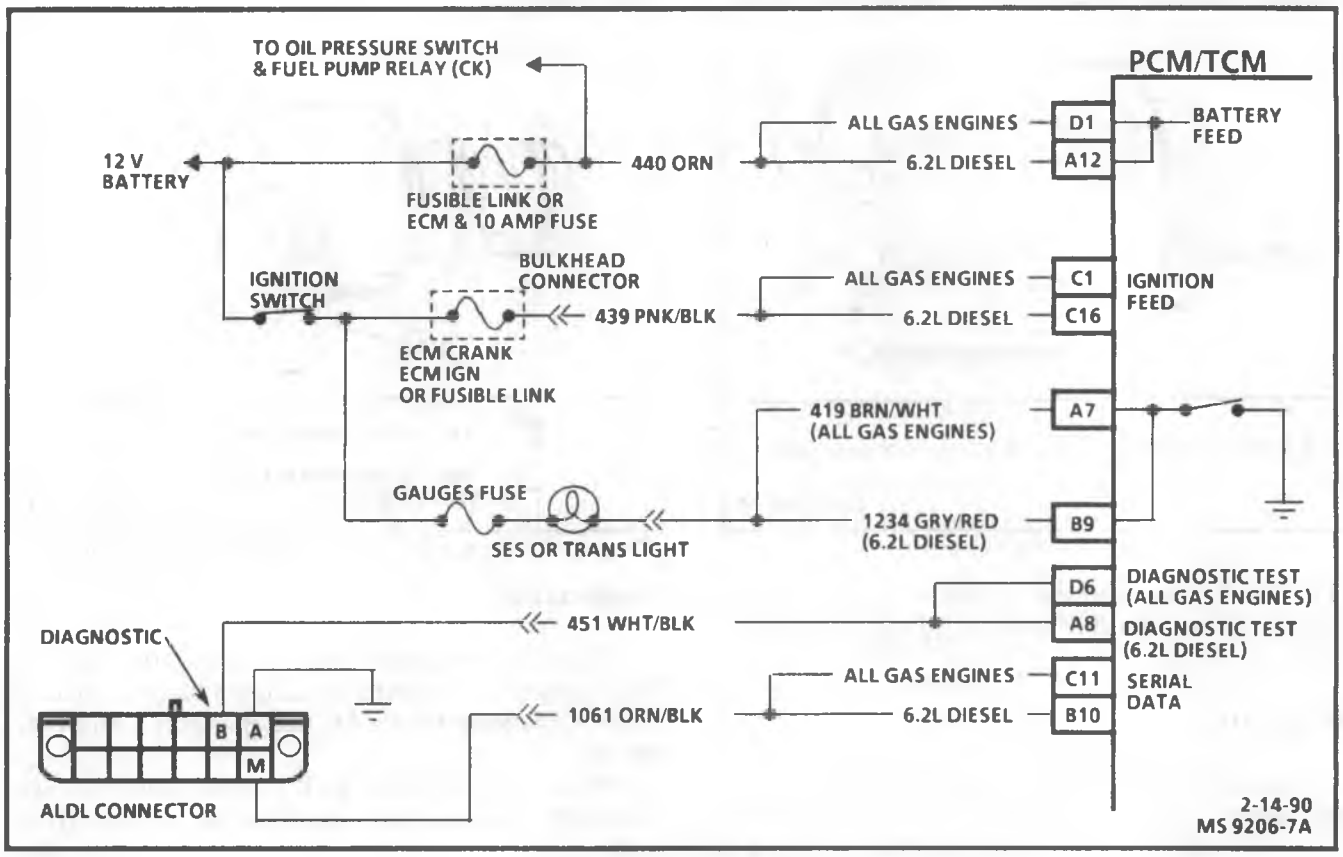

CHART A-1

NO "SERVICE ENGINE SOON"/"TRANS" LIGHT ALL ENGINES

Circuit Description:

There should always be a steady "Service Engine Soon" or "Trans" light with the ignition "ON" and engine stopped. Battery ignition voltage is supplied to the light bulb. The PCM/TCM will control the light and turn it "ON" by providing a ground path through CKT 419 or CKT 1234.

Test Description:

Number(s) below refer to circled number(s) on the diagnostic chart.

1. If the fuse in holder is blown, refer to facing page of Code 54 for complete circuit.
2. Using a test light connected to 12 volts, probe each of the system ground circuits to be sure a good ground is present. See "PCM/TCM Terminal End View" in this section for PCM/TCM pin locations of ground circuits.

Diagnostic Aids:

If the engine runs OK, check:

- Faulty light bulb.
- CKT 419 open.
- Gage fuse blown. This will result in no brake warning light, oil or generator lights, seat belt reminder, etc.

If the engine cranks but will not run, check:

- Continuous battery-fuse or fusible link open.
- PCM/TCM ignition fuse open.
- Battery CKT 440 to PCM/TCM.
- Ignition CKT 439 to PCM/TCM open.
- Poor connection to PCM/TCM.

CHART A-1

NO "SERVICE ENGINE SOON"/"TRANS" LIGHT ALL ENGINES

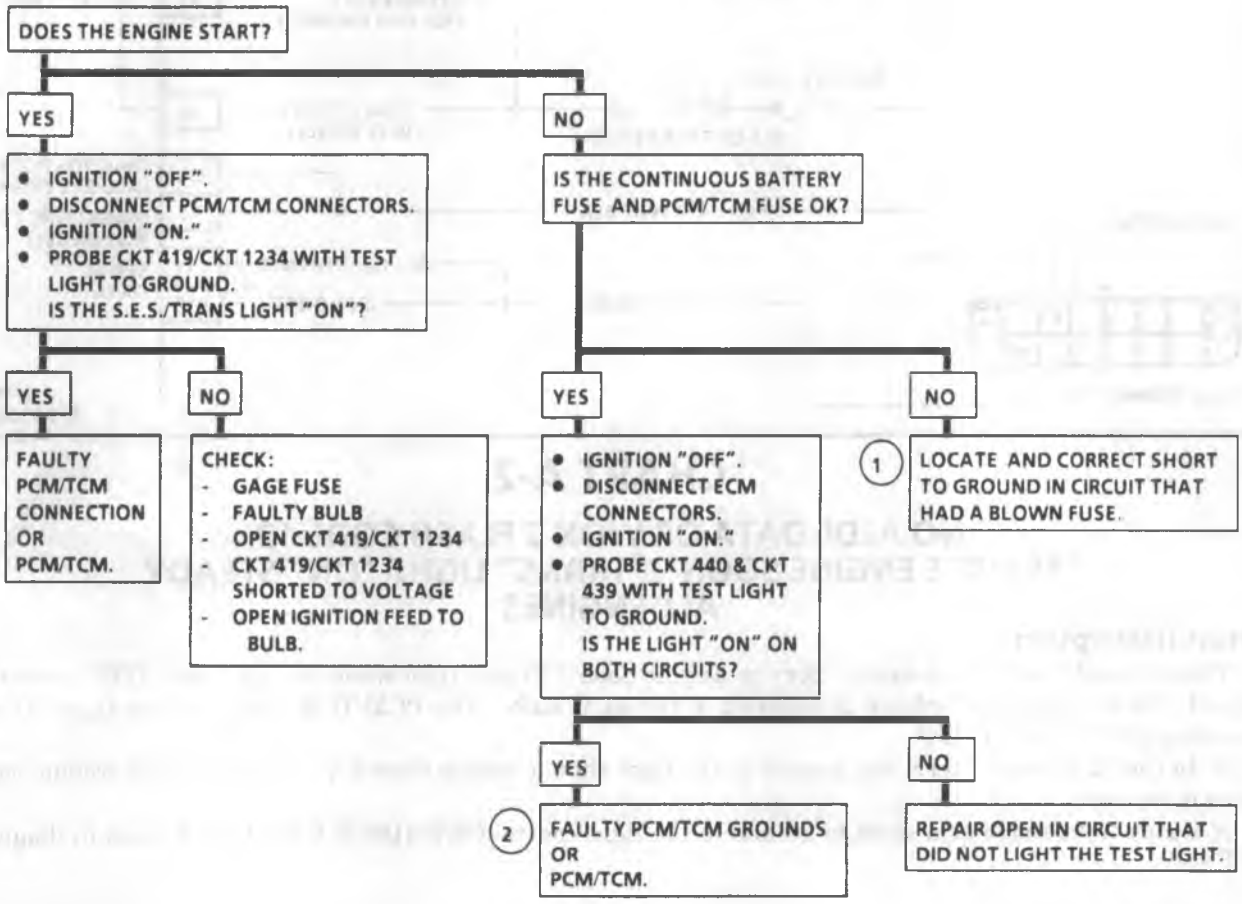

"AFTER REPAIRS," CONFIRM "CLOSED LOOP " OPERATION AND NO "SERVICE ENGINE SOON" LIGHT.

2-21-90
MS 9252-7A

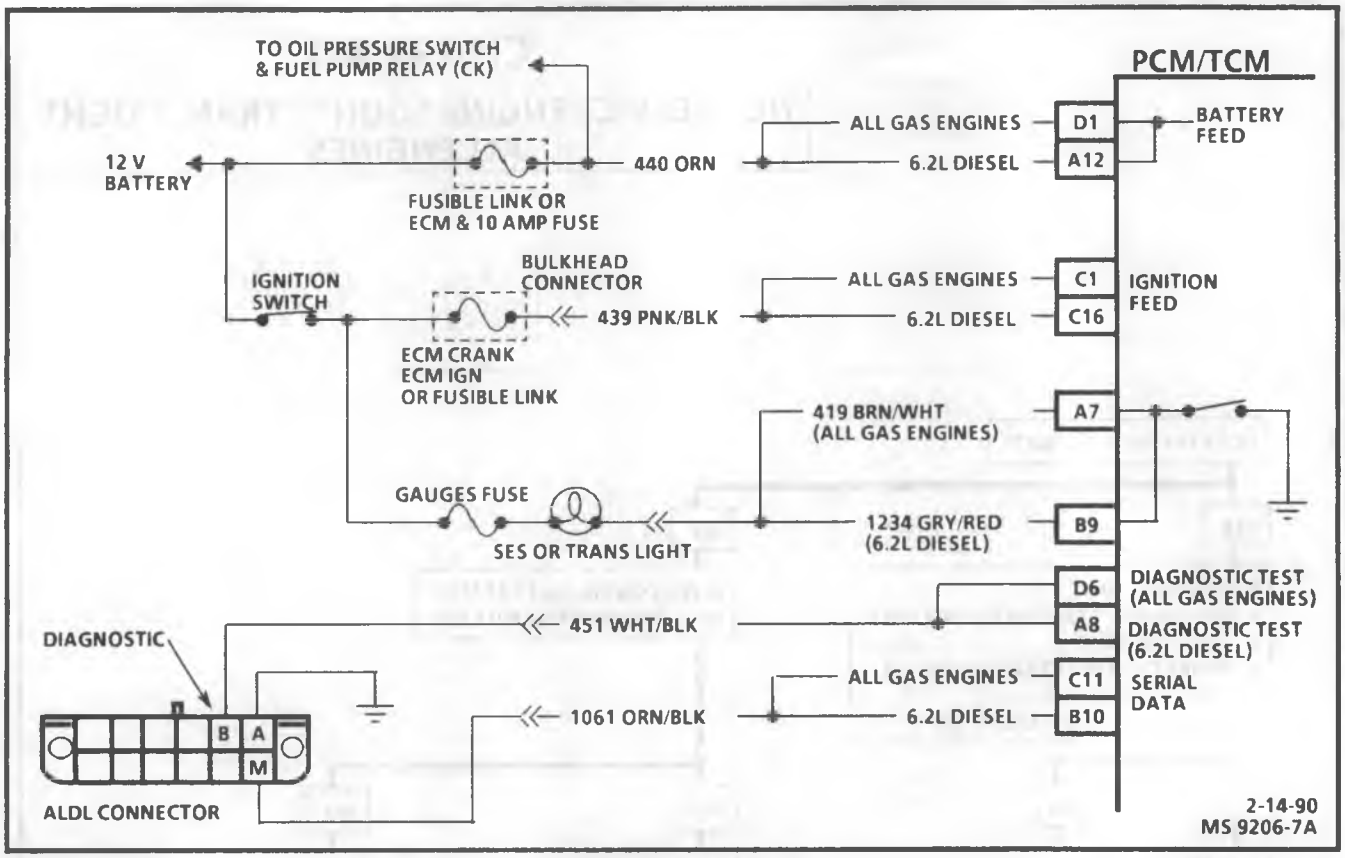

CHART A-2

NO ALDL DATA OR WON'T FLASH CODE 12 "SERVICE ENGINE SOON"/"TRANS" LIGHT "ON" STEADY ALL ENGINES

Circuit Description:

There should always be a steady "Service Engine Soon"/"Trans" light when the ignition is "ON" and engine stopped. Battery ignition voltage is supplied to the light bulb. The PCM/TCM will turn the light "ON" by grounding CKT 419/CKT 1234.

With the "diagnostic" terminal grounded, the light should flash a Code 12, followed by any trouble code(s) stored in memory.

A steady light suggests a short to ground in the light control CKT 419/CKT 1234 or an open in diagnostic CKT 451.

Test Description: Number(s) below refer to circled number(s) on the diagnostic chart.

1. If there is a problem with the PCM/TCM that causes a "Scan" tool to not read serial data, then the PCM/TCM should not flash a Code 12. If Code 12 does flash, be sure that the "Scan" tool is working properly on another vehicle. If the "Scan" is functioning properly, and CKT 1061 is OK, the PROM/MEM-CAL or PCM/TCM may be at fault for the NO ALDL symptom.
2. If the light goes "OFF" when the PCM/TCM connector is disconnected, then CKT 419/CKT 1234 is not shorted to ground.
3. This step will check for an open diagnostic CKT 451.
4. At this point, the "Service Engine Soon"/"Trans" light wiring is OK. The problem is a faulty PCM/TCM PROM/MEM-CAL. If Code 12 does not flash, the PCM/TCM should be replaced using the original PROM/MEM-CAL. Replace the PROM/MEM-CAL only after trying a PCM/TCM, as a defective PROM/MEM-CAL is an unlikely cause of the problem.

CHART A-2

NO ALDL DATA OR WON'T FLASH CODE 12 "SERVICE ENGINE SOON"/"TRANS" LIGHT "ON" STEADY ALL ENGINES

- IGNITION "ON". ENGINE "OFF". IS THE "SES"/TRANS LIGHT "ON"?

YES

- GROUND DIAGNOSTIC TERM. DOES LIGHT FLASH CODE 12?

NO

SEE CHART A-1

NO

(2)
- IGNITION "OFF."
- DISCONNECT PCM/TCM CONNECTORS.
- IGNITION "ON" AND NOTE "SERVICE ENGINE SOON"/TRANS LIGHT.

YES

(1)
- IF PROBLEM WAS NO ALDL DATA:
- CHECK SERIAL DATA CKT 1061 FOR OPEN OR SHORT TO GND OR SHORT TO VOLTAGE BETWEEN PCM/TCM AND ALDL CONNECTOR. IF OK, IT IS A FAULTY PCM/TCM OR PROM.

(3) LIGHT "OFF"

- IGNITION "OFF."
- RECONNECT PCM/TCM.
- IGNITION "ON," ENGINE STOPPED.
- DIAGNOSTIC TERMINAL NOT GROUNDED.
- BACK PROBE PCM/TCM, CKT 451, WITH TEST LIGHT TO GROUND.

LIGHT "ON"

REPAIR SHORT TO GROUND IN CKT 419/CKT 1234.

NO CODE 12

(4)
- CHECK PROM/MEMCAL FOR PROPER INSTALLATION.
- If OK, REPLACE PCM/TCM USING ORIGINAL PROM/MEM-CAL.
- RECHECK FOR CODE 12 PCM/TCM.

CODE 12

- CHECK FOR OPEN IN ALDL DIAGNOSTIC TERMS. "B" AND CKT 451 TO PCM/TCM.
- IF OK, CHECK FOR OPEN IN ALDL TERM. "A" TO PCM/TCM.

NO CODE 12

REPLACE PROM/MEM-CAL

CODE 12

SYSTEM OK

"AFTER REPAIRS," CONFIRM "CLOSED LOOP" OPERATION AND NO "SERVICE ENGINE SOON" LIGHT.

7-5-90
MS 9253-7A

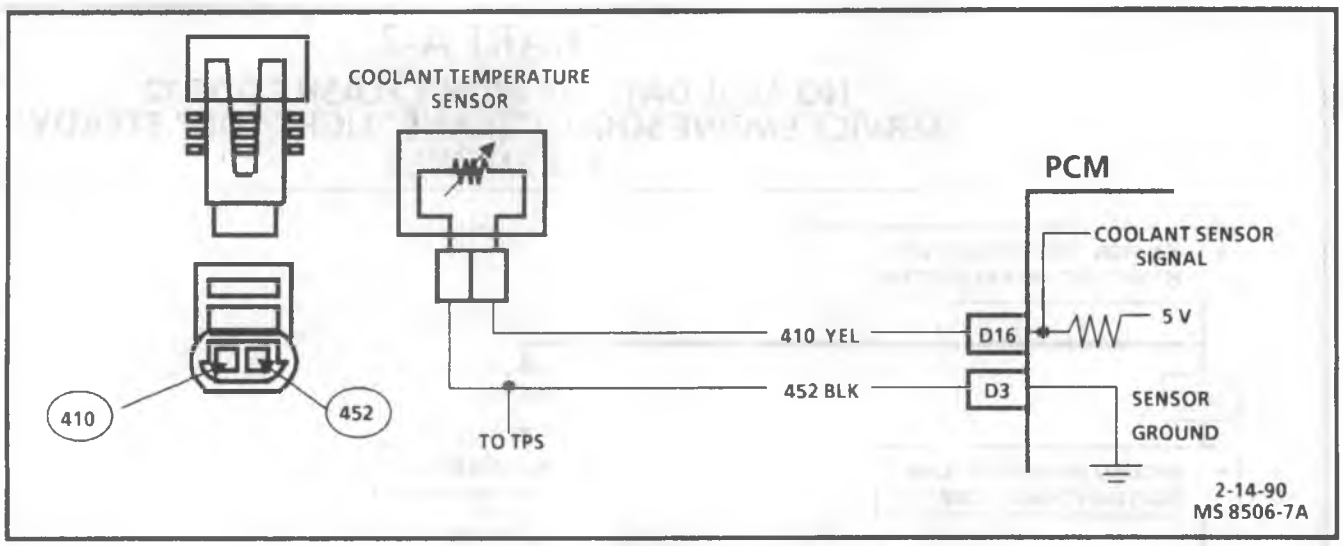

CODE 14

COOLANT TEMPERATURE SENSOR (CTS) CIRCUIT
(HIGH TEMPERATURE INDICATED)
ALL GAS ENGINES

Circuit Description:

The Coolant Temperature Sensor (CTS) is a thermistor that controls the signal voltage to the PCM. The PCM applies a voltage on CKT 410 to the sensor. when the engine is cold, the sensor (thermistor) resistance is high, therefore, the PCM will see high signal voltage.

As the engine warms, the sensor resistance becomes less and the voltage drops. At normal engine operating temperature (85°C to 95°C), the voltage will measure about 1.5 to 2.0 volts.

A Code 14 may affect TCC operation.

Test Description:

Number(s) below refer to circled number(s) on the diagnostic chart.

1. Code 14 will set if:
   - Signal voltage indicates a coolant temperature above 135°C (270°F) for one second.
2. This test will determine if CKT 410 is shorted to ground which will cause the conditions for Code 14.

Diagnostic Aids:

Check harness routing for a potential short to ground in CKT 410.

"Scan" tool displays engine temperature in degrees centigrade. After engine is started, the temperature should rise steadily to about 90°C then stabilize when thermostat opens.

See "PCM/TCM Intermittent Codes or Performance" in this section.

The "Temperature to Resistance Value" scale at the right may be used to test the coolant sensor at various temperature levels to evaluate the possibility of a "skewed" (mis-scaled) sensor. A "skewed" sensor could result in poor driveability complaints.

CODE 14

COOLANT TEMPERATURE SENSOR (CTS) CIRCUIT
(HIGH TEMPERATURE INDICATED)
ALL GAS ENGINES

1. DOES "SCAN" TOOL DISPLAY COOLANT TEMPERATURE OF 130°C (266°F) OR HIGHER?

- YES → 2
- NO → CODE 14 IS INTERMITTENT. IF NO ADDITIONAL CODES WERE STORED, REFER TO "DIAGNOSTIC AIDS" ON FACING PAGE.

2. • DISCONNECT COOLANT TEMPERATURE SENSOR. "SCAN" TOOL SHOULD DISPLAY COOLANT TEMPERATURE BELOW -30°C (-22°F). DOES IT?

- YES → REPLACE COOLANT TEMPERATURE SENSOR.
- NO → CKT 410 SHORTED TO GROUND OR CKT 410 SHORTED TO SENSOR GROUND CIRCUIT OR FAULTY PCM.

DIAGNOSTIC AID

COOLANT SENSOR		
TEMPERATURE VS. RESISTANCE VALUES (APPROXIMATE)		
°C	°F	OHMS
100	212	177
90	194	241
80	176	332
70	158	467
60	140	667
50	122	973
45	113	1188
40	104	1459
35	95	1802
30	86	2238
25	77	2796
20	68	3520
15	59	4450
10	50	5670
5	41	7280
0	32	9420
-5	23	12300
-10	14	16180
-15	5	21450
-20	-4	28680
-30	-22	52700
-40	-40	100700

"AFTER REPAIRS" CONFIRM "CLOSED LOOP" OPERATION AND NO "SERVICE ENGINE SOON" LIGHT.

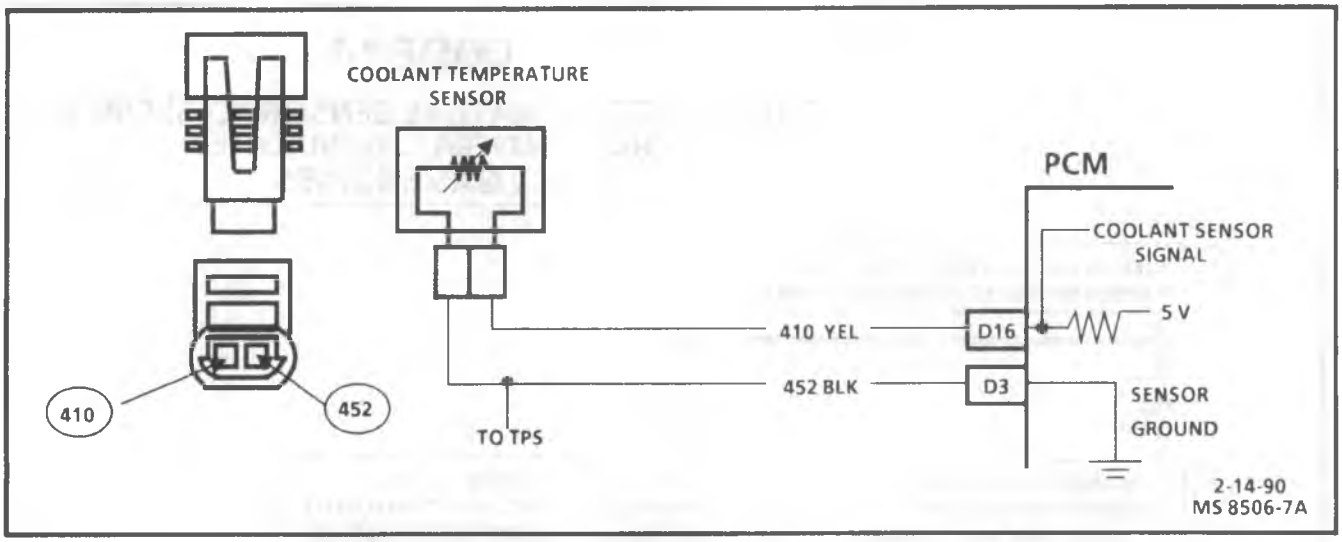

CODE 15

COOLANT TEMPERATURE SENSOR (CTS) CIRCUIT
(LOW TEMPERATURE INDICATED)
ALL GAS ENGINES

Circuit Description:

The Coolant Temperature Sensor (CTS) sensor is a thermistor that controls the signal voltage to the PCM. The PCM applies a voltage on CKT 410 to the sensor. When the engine is cold, the sensor (thermistor) resistance is high, therefore, the PCM will see high signal voltage.

As the engine warms, the sensor resistance becomes less and the voltage drops. At normal engine operating temperature 85°C to 95°C (194°F), the voltage will measure about 1.5 to 2.0 volts.

A Code 15 may inhibit TCC operation.

Test Description:

Number(s) below refer to circled number(s) on the diagnostic chart.

1. Code 15 will set if:
   - Signal voltage indicates a coolant temperature less than -33°C (-27°F) for one second.
2. This test simulates a Code 14. If the PCM recognizes the low signal voltage, (high temperature) and the "Scan" reads 130°C or above, the PCM and wiring are OK.
3. This test will determine if CKT 410 is open. There should be 5 volts present at sensor connector if measured with a DVOM.

Diagnostic Aids:

A "Scan" tool reads engine temperature in degrees Centigrade. After engine is started, the temperature should rise steadily to about 90°C then stabilize when thermostat opens.

A faulty connection, or an open in CKT 410 or CKT 452 will result in a Code 15.

See "PCM/TCM Intermittent Codes on Performance" in this section.

The "Temperature To Resistance Value" scale at the right may be used to test the coolant sensor at various temperature levels to evaluate the possibility of a "skewed" (mis-scaled) sensor. A "skewed" sensor could result in poor driveability complaints.

CODE 15

COOLANT TEMPERATURE SENSOR (CTS) CIRCUIT
(LOW TEMPERATURE INDICATED)
ALL GAS ENGINES

1. • DOES "SCAN" TOOL DISPLAY COOLANT TEMPERATURE OF -30°C (-22°F) OR LESS?

YES →

2. • DISCONNECT COOLANT TEMPERATURE SENSOR.
• JUMPER HARNESS TERMINALS TOGETHER.
• "SCAN" TOOL SHOULD DISPLAY 130°C (266°F) OR MORE. DOES IT?

NO →

CODE 15 IS INTERMITTENT. IF NO ADDITIONAL CODES WERE STORED, REFER TO "DIAGNOSTIC AIDS" ON FACING PAGE.

NO →

3. • JUMPER CKT 410 TO GROUND.
• "SCAN" TOOL SHOULD DISPLAY OVER 130°C (266 °F). DOES IT?

YES →

FAULTY CONNECTION
OR
COOLANT TEMPERATURE SENSOR.

YES →

OPEN COOLANT TEMPERATURE SENSOR GROUND CIRCUIT, FAULTY CONNECTION
OR
FAULTY PCM.

NO →

OPEN CKT 410, FAULTY CONNECTION AT PCM
OR
FAULTY PCM.

DIAGNOSTIC AID

COOLANT SENSOR
TEMPERATURE VS. RESISTANCE VALUES
(APPROXIMATE)

°C	°F	OHMS
100	212	177
90	194	241
80	176	332
70	158	467
60	140	667
50	122	973
45	113	1188
40	104	1459
35	95	1802
30	86	2238
25	77	2796
20	68	3520
15	59	4450
10	50	5670
5	41	7280
0	32	9420
-5	23	12300
-10	14	16180
-15	5	21450
-20	-4	28680
-30	-22	52700
-40	-40	100700

"AFTER REPAIRS," CONFIRM "CLOSED LOOP" OPERATION AND NO "SERVICE ENGINE SOON" LIGHT.

5-4-90
MS 9254-7A

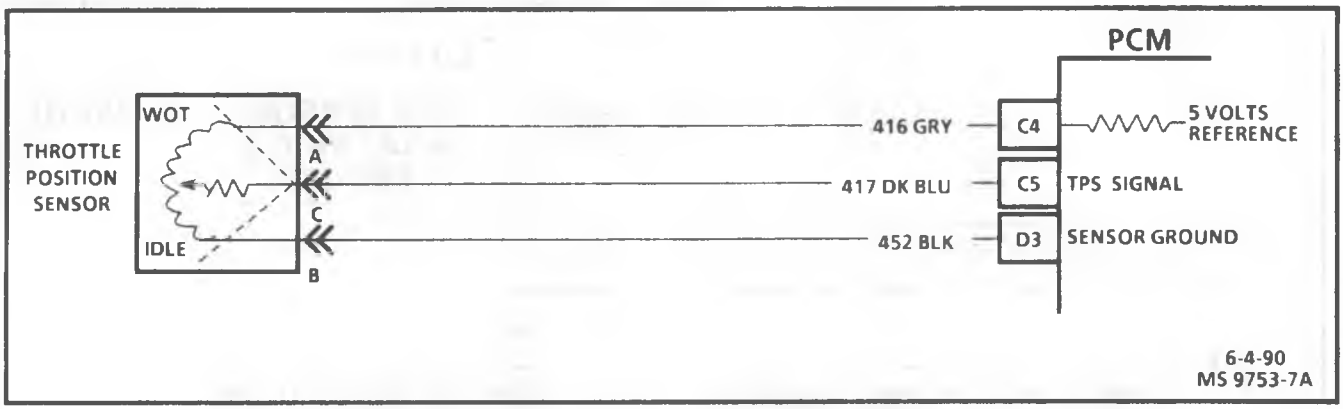

CODE 21

THROTTLE POSITION SENSOR (TPS) CIRCUIT
(SIGNAL VOLTAGE HIGH)
ALL GAS ENGINES

Circuit Description:

The Throttle Position Sensor (TPS) provides a voltage signal that changes relative to the throttle blade angle. Signal voltage will vary from about .5 volt at idle to over 4.0 volts at Wide Open Throttle (WOT).

The TPS signal is one of the most important inputs used by the PCM for transmission control and for most of the PCM control outputs.

Test Description: Number(s) below refer to circled number(s) on the diagnostic chart.

1. Code 21 will set if:
   - Engine running.
   - TPS signal voltage is greater than about 4.9 volts at wide open throttle.
   - All conditions met for one second.

   With throttle closed, the TPS should read less than 1.25 volts. See "Diagnostic Aids."
2. With the TPS sensor disconnected, the TPS voltage should go low if the PCM and wiring are OK.
3. Probing CKT 452 with a test light checks the 5 volt return circuit.

Diagnostic Aids:

A "Scan" tool reads throttle position in volts and should read about .5 to 1.25 volts with throttle closed and ignition "ON" or at idle. Voltage should increase at a steady rate as throttle is moved toward WOT.

Also, some "Scan" tools will read throttle angle .0% = closed throttle 100% = WOT.

Refer to (SECTION 2) for "PCM Intermittent Codes or Performance."

"Scan" TPS while depressing accelerator pedal with engine stopped and ignition "ON." Display should vary from below 1 25 volts (1250 mV) when throttle was closed, to over 4.0 volts (4000 mV) when throttle is held at Wide Open Throttle position.

CODE 21

THROTTLE POSITION SENSOR (TPS) CIRCUIT
(SIGNAL VOLTAGE HIGH)
ALL GAS ENGINES

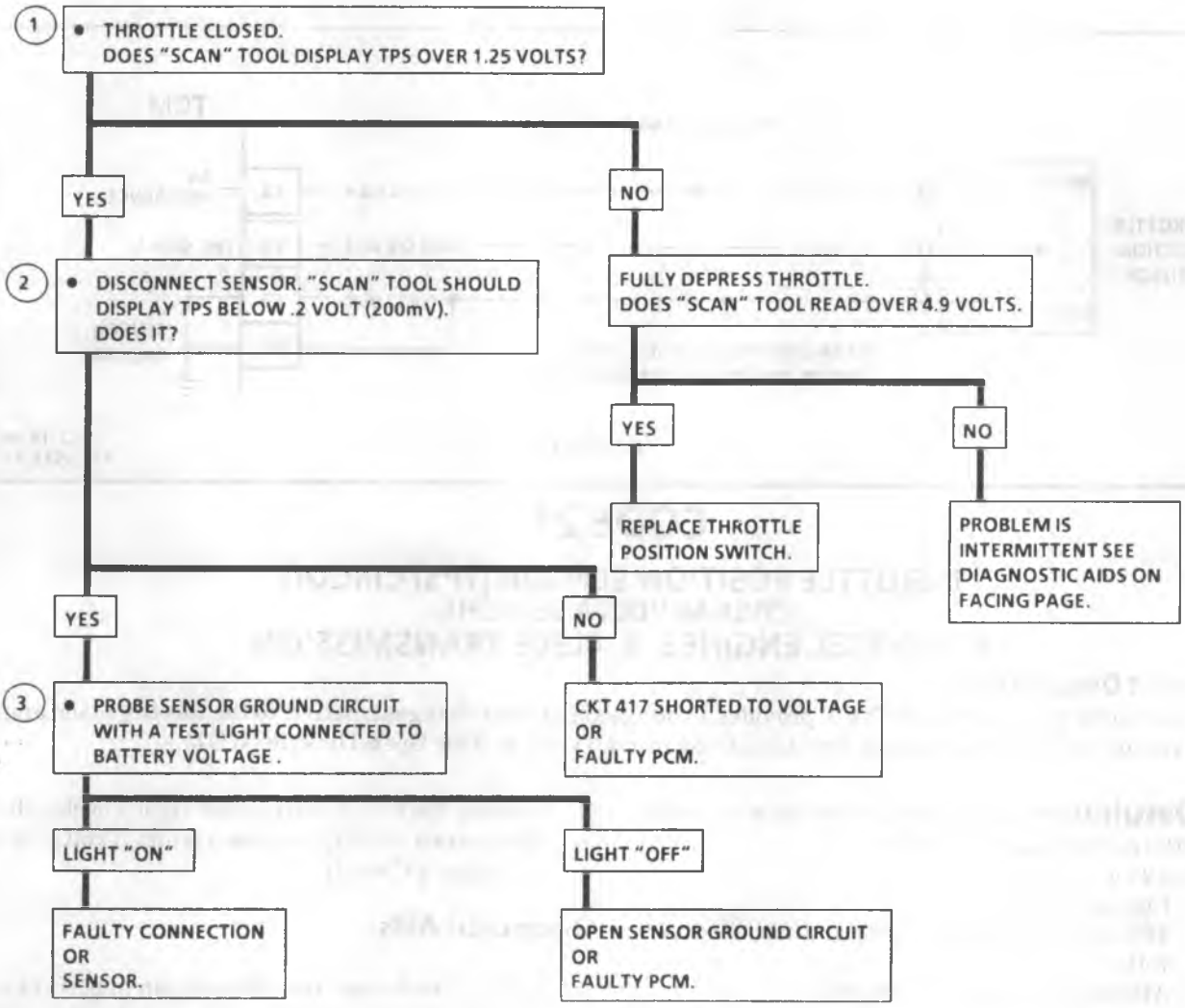

6-15-90
MS 9964-6E

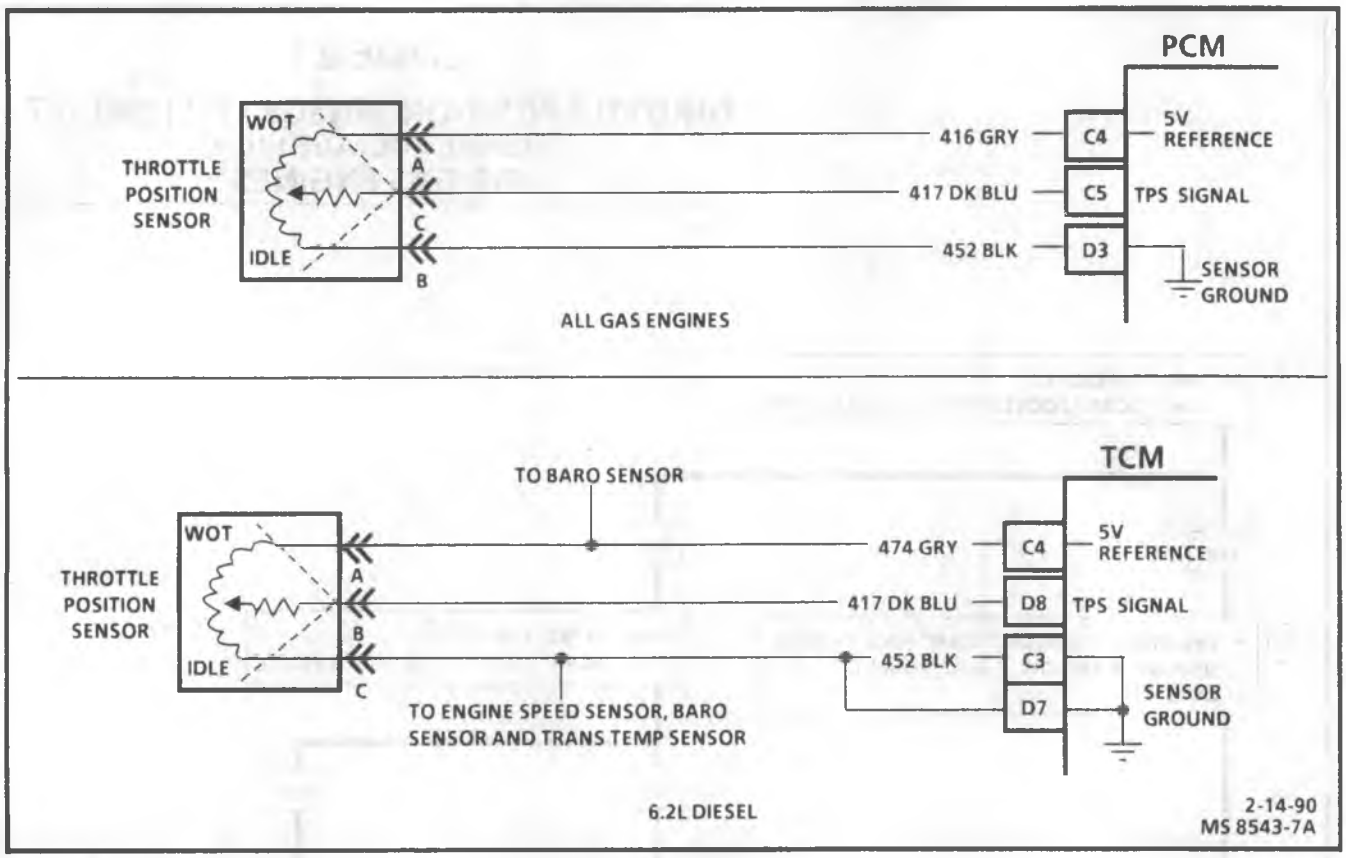

CODE 21

THROTTLE POSITION SENSOR (TPS) CIRCUIT
(SIGNAL VOLTAGE HIGH)
6.2L DIESEL ENGINES & 4L80E TRANSMISSION

Circuit Description:

The Throttle Position Sensor (TPS) provides a voltage signal that changes relative to the throttle blade angle. Signal voltage will vary from about .5 volt at idle to over 4.0 volts at Wide Open Throttle (WOT).

Test Description: Number(s) below refer to circled number(s) on the diagnostic chart.

1. Code 21 will set if:
   - Engine running.
   - TPS signal voltage is greater than about 4.9 volts.
   - All conditions met for 1 second.
     OR
   - TPS signal voltage over 4.5 volts with ignition "ON."

   With throttle closed, the TPS should read less than 1.25 volts. If it doesn't, adjust TPS.
2. With the TPS sensor disconnected, the TPS voltage should go low if the PCM and wiring are Ok.
3. Probing CKT 452 with a test light checks the 5 volts return circuit, because a faulty 5 volts return will cause a Code 21.

Diagnostic Aids:

A "Scan" tool reads throttle position in percent and should read 0% volts with throttle closed and ignition "ON" or at idle. Percent should increase at a steady rate as throttle is moved toward Wide Open Throttle (WOT).

See "PCM/TCM Intermittent Codes or Performance" in this section.

CODE 21

THROTTLE POSITION SENSOR (TPS) CIRCUIT
(SIGNAL VOLTAGE HIGH)
6.2L DIESEL ENGINES & 4L80E TRANSMISSION

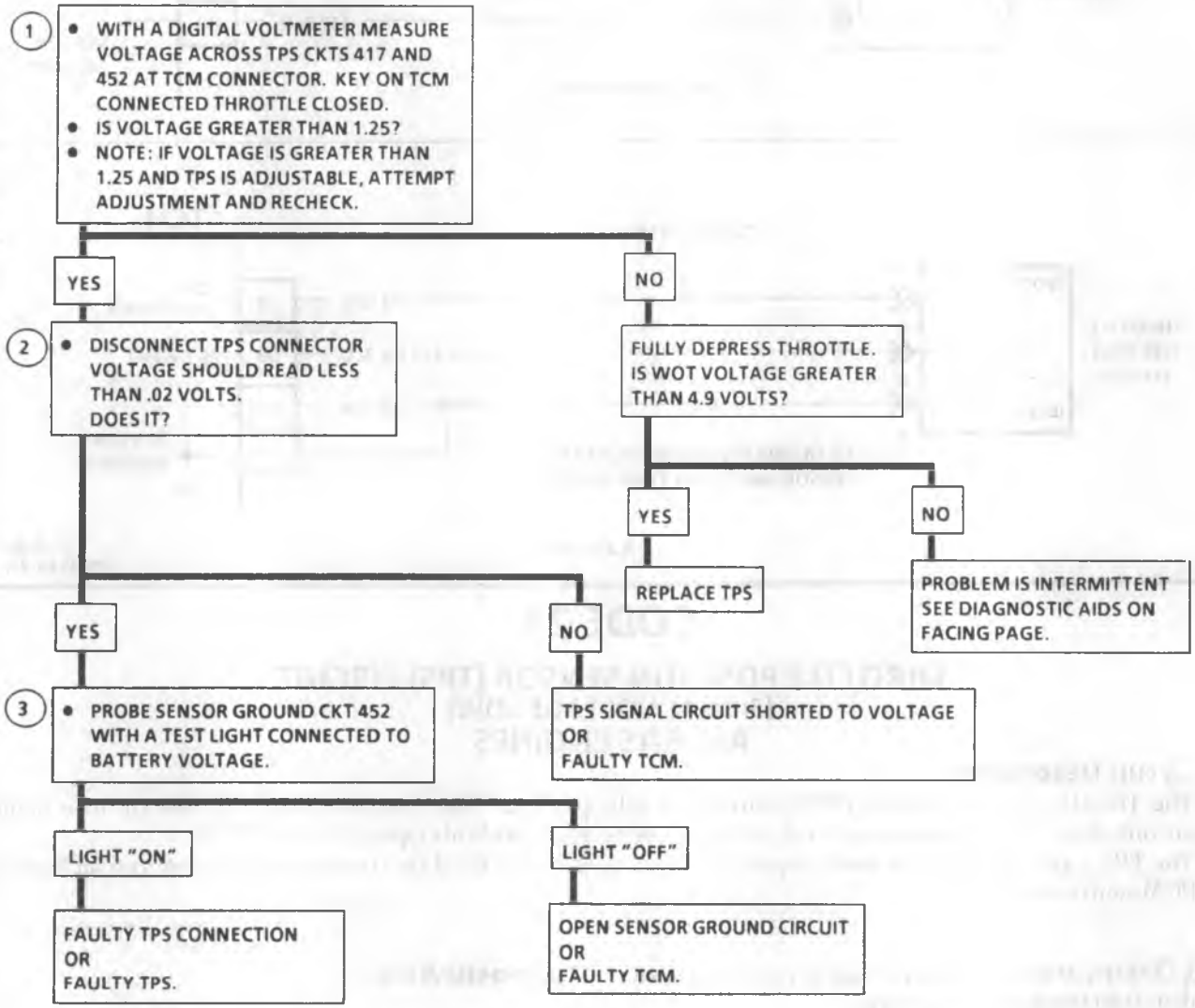

7-5-90
MS 10041-7A

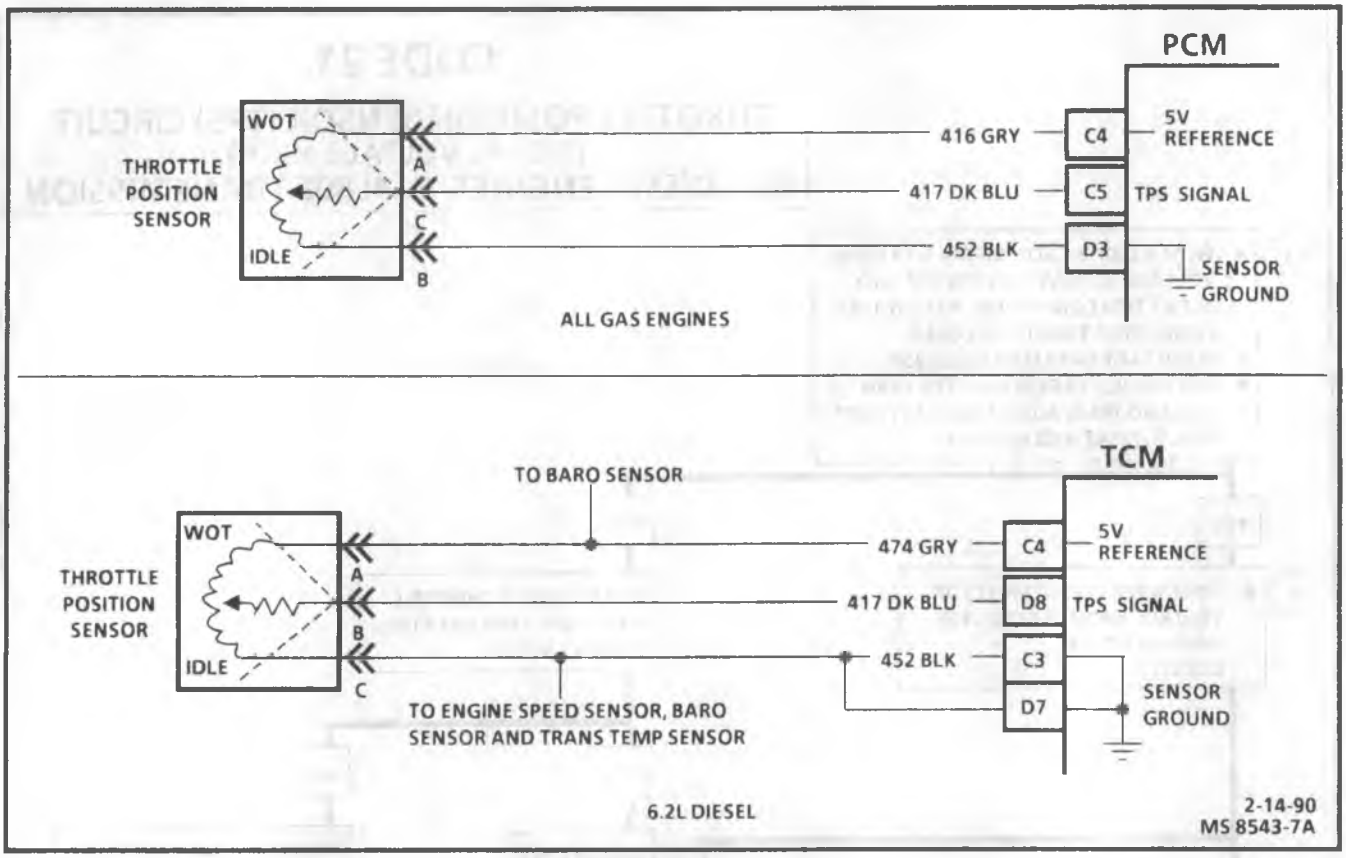

CODE 22

THROTTLE POSITION SENSOR (TPS) CIRCUIT
(SIGNAL VOLTAGE LOW)
ALL GAS ENGINES

Circuit Description:

The Throttle Position Sensor (TPS) provides a voltage signal that changes relative to the throttle blade. Signal voltage will vary from about .5 volt at idle to over 4.0 volts at Wide Open Throttle (WOT).

The TPS signal is one of the most important inputs used by the PCM for transmission control and for most of the PCM control outputs.

Test Description: Number(s) below refer to circled number(s) on the diagnostic chart.

1. Code 22 will set if:
   - Engine running
   - TPS signal voltage is less than about .2 volt for 1 second.
2. Simulates Code 21: (high voltage) If the PCM recognizes the high signal voltage, the PCM and wiring are OK.
3. Replace TPS.
4. This simulates a high signal voltage to check for an open in CKT 417.

Diagnostic Aids:

A "Scan" tool reads throttle position in volts and should read about .45 to 1.25 volts with throttle closed and ignition on or at idle. Voltage should increase at a steady rate as throttle is moved toward Wide Open Throttle (WOT).

An open or short to ground in CKT 416 or CKT 417 will result in a Code 22.

See "PCM/TCM Intermittent Codes or Performance" in this section.

"Scan" TPS while depressing accelerator pedal with engine stopped and ignition "ON." Display should vary from below 1.25 volts when throttle was closed, to over 4.0 volts when throttle is held at Wide Open Throttle (WOT) position.

CODE 22

THROTTLE POSITION SENSOR (TPS) CIRCUIT
(SIGNAL VOLTAGE LOW)
ALL GAS ENGINES

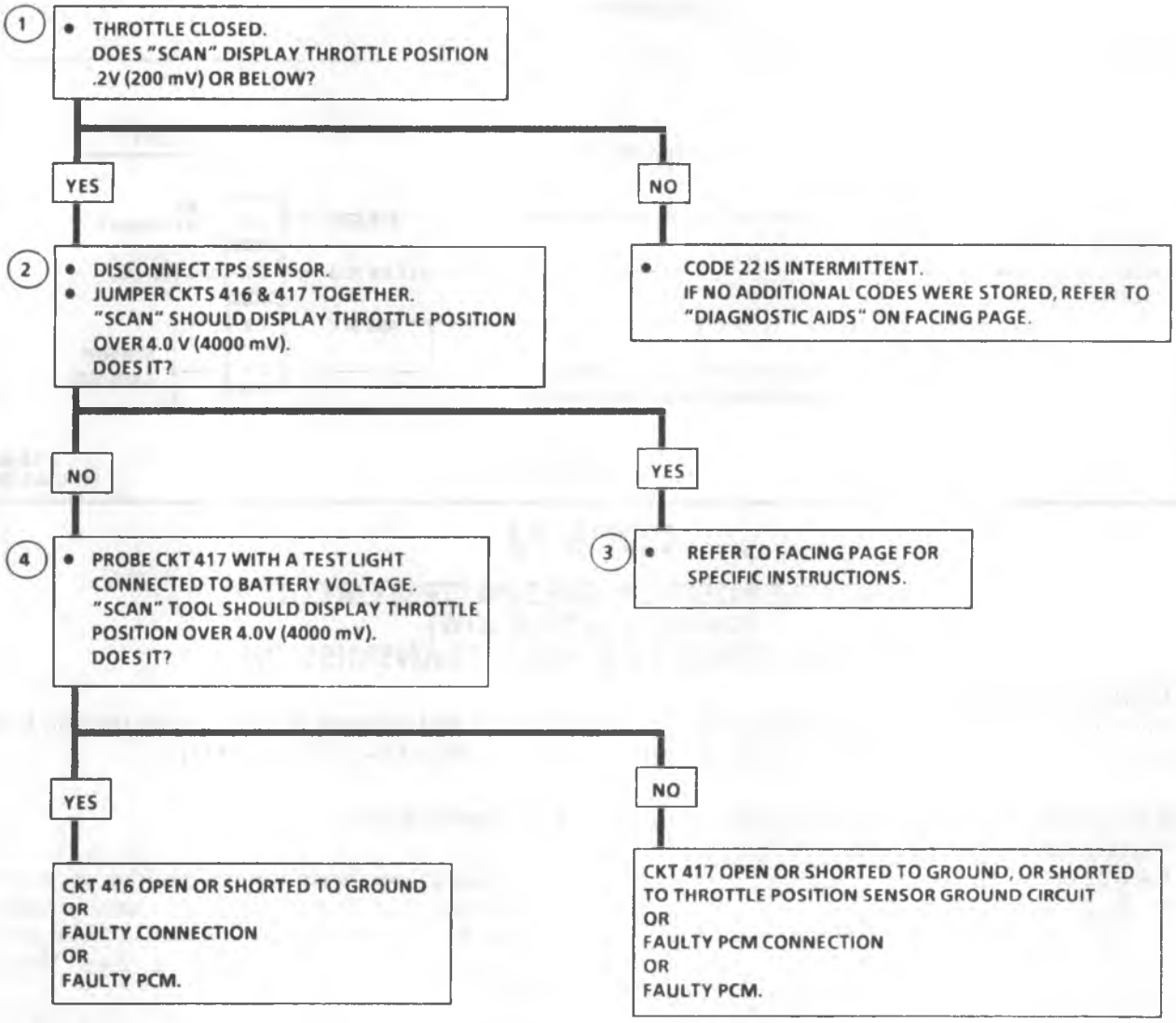

AFTER REPAIRS, CLEAR CODES, RUN ENGINE FOR 2 MINUTES, AND RECHECK FOR CODES

7-5-90
MS 9259-7A

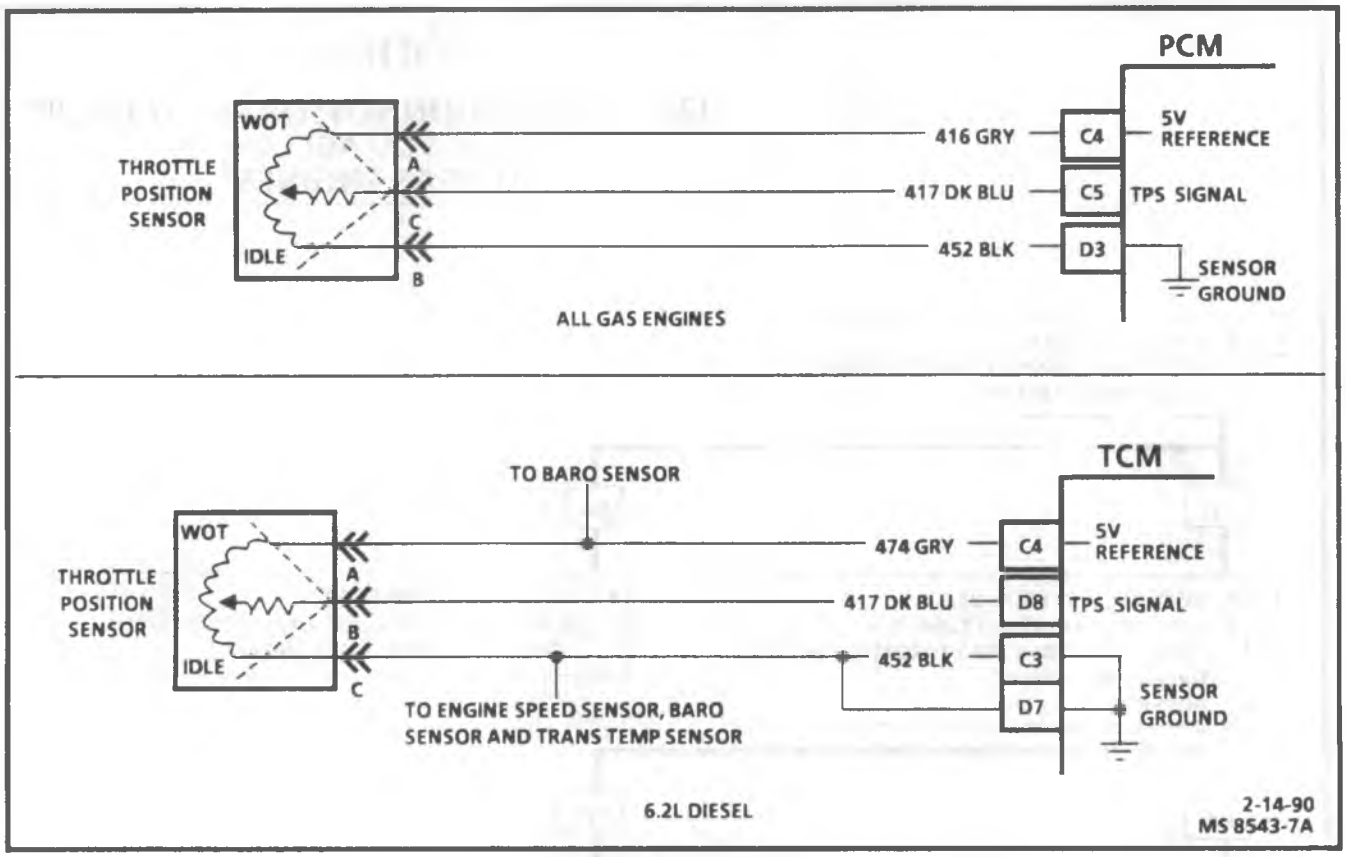

CODE 22

THROTTLE POSITION SENSOR (TPS) CIRCUIT (SIGNAL VOLTAGE LOW) 6.2L DIESEL ENGINES & 4L80E TRANSMISSION

Circuit Description:

The Throttle Position Sensor (TPS) provides a voltage signal that changes relative to the throttle blade. Signal voltage will vary from about .5 volt at idle to over 4.0 volts at Wide Open Throttle (WOT).

Test Description: Number(s) below refer to circled number(s) on the diagnostic chart.

1. Code 22 will set if:
   - Engine running.
   - TPS signal voltage is less than about .2 volt for 1 second.
2. Simulates Code 21: (high voltage) If the TCM recognizes the high signal voltage, the TCM and wiring are OK.
3. This simulates a high signal voltage to check for an open in CKT 417.

Diagnostic Aids:

A "Scan" tool reads throttle position in percent. Should read near 0% with throttle closed and ignition on or at idle. Percent should increase at a steady rate as throttle is moved toward Wide Open Throttle (WOT).

An open or short to ground in CKT 416 or CKT 417 will result in a Code 22.

See "PCM/TCM Intermittent Codes or Performance" in this section.

Measure voltage across CKT 417 and CKT 452 while depressing accelerator pedal with engine stopped and ignition "ON." Display should vary from below 1.25 volts (1250 mV) when throttle was closed, to over 4.0 volts (4000 mV) when throttle is held at Wide Open Throttle (WOT) position.

CODE 22

THROTTLE POSITION SENSOR (TPS) CIRCUIT
(SIGNAL VOLTAGE LOW)
6.2L DIESEL ENGINES & 4L80E TRANSMISSION

1 • WITH A DIGITAL VOLTMETER MEASURE VOLTAGE ACROSS TPS CIRCUITS 417 AND 452.
KEY ON TCM CONNECTED THROTTLE CLOSED

LESS THAN .2 VOLT

• IF TPS IS ADJUSTABLE ATTEMPT ADJUSTMENT AND RECHECK

LESS THAN .2 VOLT

.5 TO 1.25 VOLT

• FULLY DEPRESS THROTTLE VOLTAGE SHOULD READ OVER 4.0 VOLTS.
DOES IT?

NO

YES

CODE 22 IS INTERMITTENT. IF NO ADDITIONAL CODES WERE STORED, REFER TO DIAGNOSTIC AIDS ON FACING PAGE.

2 • REMOVE TPS CONNECTOR.
• JUMPER CIRCUITS 474 AND 417 TOGETHER.
• VOLTAGE SHOULD READ OVER 4.0 VOLTS.
DOES IT?

NO

YES

REPLACE TPS

3 • PROBE CIRCUIT 417 WITH A TEST LIGHT CONNECTED TO 12 VOLTS.
• VOLT METER SHOULD READ OVER 4.0 VOLTS.
DOES IT?

YES

• POOR CONNECTION AT TCM CONNECTOR
OR
OPEN
OR
SHORTED CIRCUIT 474
OR
FAULTY TCM.

NO

CIRCUIT 417 OPEN, SHORTED GROUND
OR
SHORTED TO TPS GROUND CIRCUIT
OR
FAULTY TCM CONNECTION
OR
FAULTY TCM.

7-9-90
MS 10174-7A

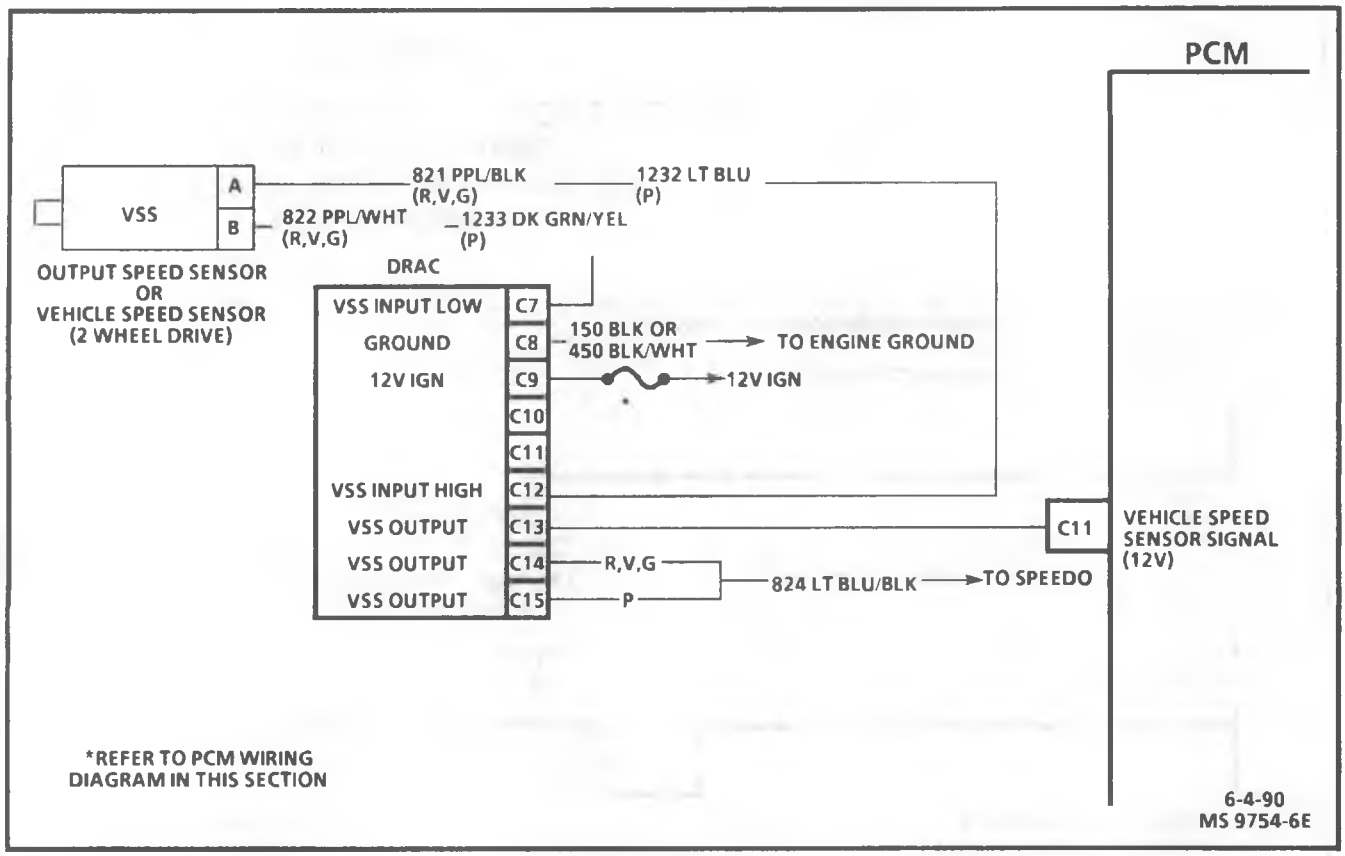

CODE 24

OUTPUT SPEED SENSOR
ALL 2 WHEEL DRIVE VEHICLES EXCEPT C/K

Circuit Description:

The output sensor circuit consists of a magnetic induction type sensor, digital ratio adapter, and wiring. Gear teeth cut in the outside diameter of the rear internal gear induce an alternating voltage in the sensor. On two wheel drive vehicles, this voltage is transmitted to a digital ratio adapter where it is passed on to the PCM/TCM. The digital ratio adapter compensates for various axle ratio and converts the signal to a square wave for use by the speedometer, cruise control, and antilock brake system. Since vehicle speed is taken from the transfer case on four wheel drive vehicles, the transmission output sensor signal on these units goes directly to the PCM/TCM.

Code 24 will set if range selected or indicated is not park or neutral. Input speed is at least 3000 rpm. Output rpm is less than 200 for at least 1 second.

If the input sensor is not operational at start up, this can cause the output sensor to read zero.

Test Description:

Number(s) below refer to circled number(s) on the diagnostic chart.

1. The first step in checking the output sensor is to verify that the problem is not the input sensor.

Diagnostic Aids:

Check all connections especially at the transmission pass-thru connector. See PCM/TCM intermittent codes in this section.

CODE 24

OUTPUT SPEED SENSOR
ALL 2 WHEEL DRIVE VEHICLES EXCEPT C/K

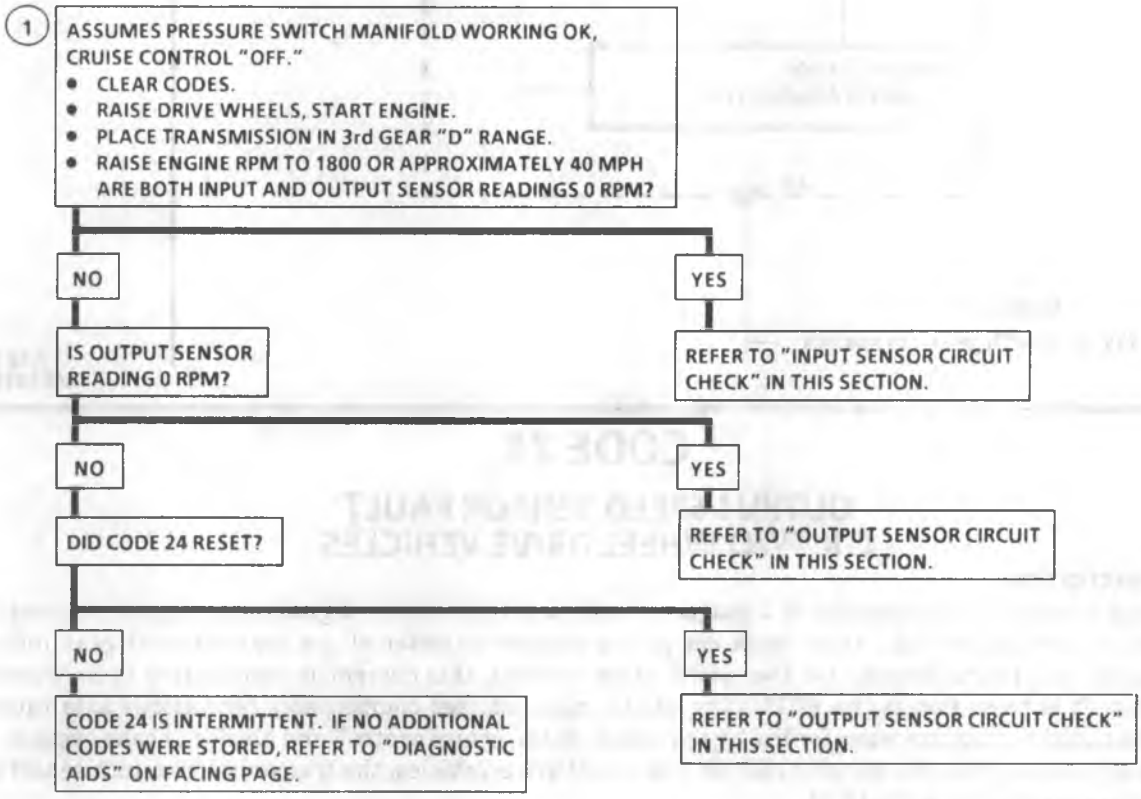

6-26-90
MS 8844-6E

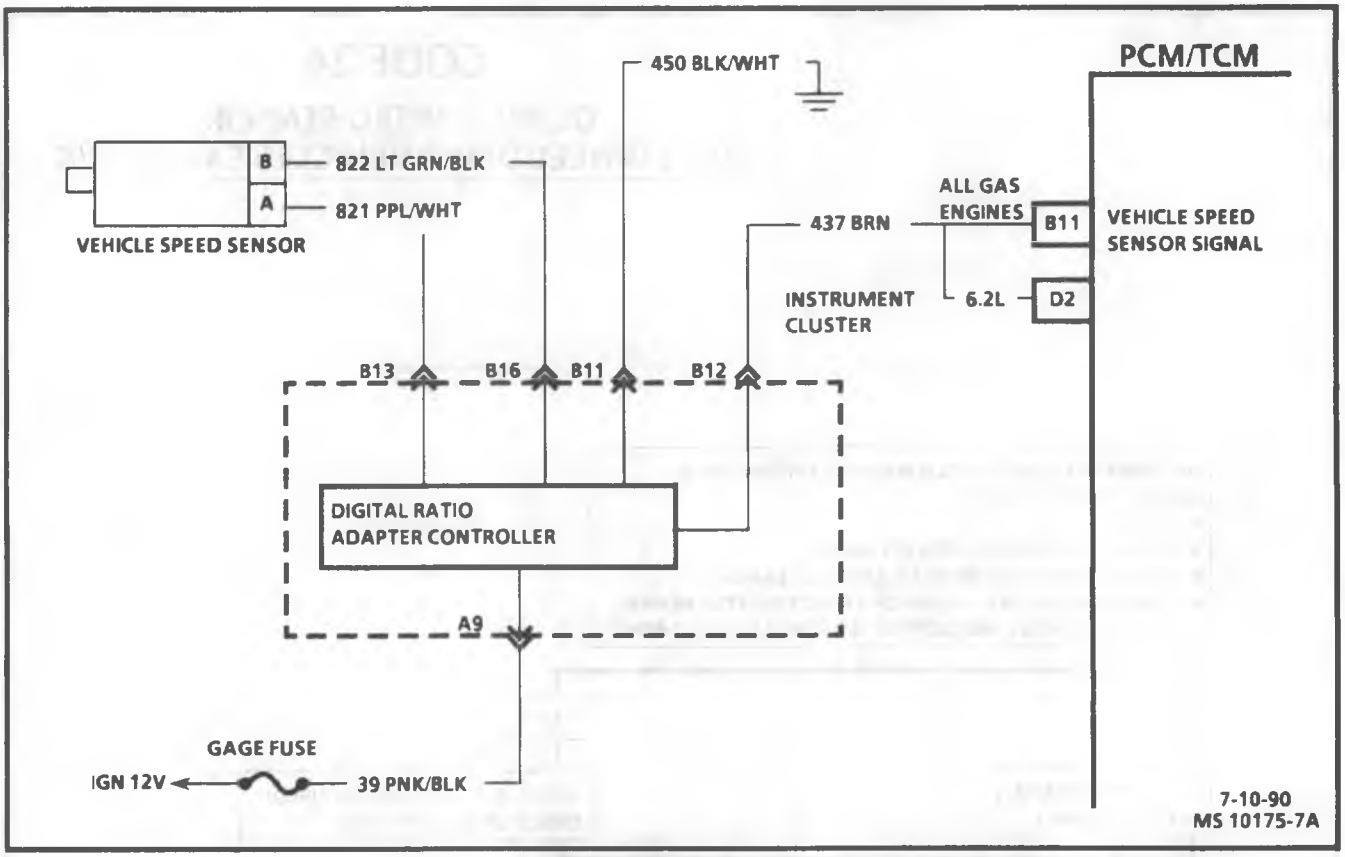

CODE 24

OUTPUT SPEED SENSOR FAULT C/K TWO WHEEL DRIVE VEHICLES

Circuit Description:

The output sensor circuit consists of a magnetic induction type sensor, digital ratio adapter, located in the instrument cluster and wiring. Gear teeth cut in the outside diameter of the rear internal gear induce an alternating current in the sensor. On two wheel drive vehicles, this current is transmitted to an instrument cluster where it is passed on to the PCM. The digital ratio adapter compensates for various axle ratios and converts the signal to a square wave for use by the speedometer, cruise control, and antilock brake system. Since vehicle speed is taken from the transfer case on four wheel drive vehicles, the transmission output sensor signal on these units goes directly to the PCM.

Code 24 will set if range selected or indicated is not park or neutral. Input speed is at least 3000 rpm. Output rpm is less than 200 for at least 1 second.

If the input sensor is not operational at start up, this can cause the output sensor to read zero.

Test Description:

Number(s) below refer to circled number(s) on the diagnostic chart.

1. Test one verifies an output speed sensor voltage at the PCM.
2. Test two directly verifies the operation of the output speed sensor.
3. Test three checks CKT 821 and CKT 822 up to the instrument cluster.

Diagnostic Aids:

Check all connections especially those at the transmission pass-thru connector.

If the input sensor is not functioning at start up, it will cause the output sensor to read zero.

While Code 24 is set, the "scan" tool will display an rpm derived from input speed.

CODE 24

OUTPUT SPEED SENSOR FAULT C/K TWO WHEEL DRIVE VEHICLES

1
- CLEAR CODES RAISE DRIVE WHEELS.
- WITH A VOLTMETER ON THE DC 20 VOLT SCALE, BACKPROBE THE PCM CONNECTOR CKT 437 TO GROUND.
- ENGINE RUNNING.
- TRANSMISSION IN GEAR.

LESS THAN 1 VOLT

DOES SPEEDOMETER WORK?

NO

2 REMOVE OUTPUT SENSOR CONNECTOR, MEASURE VOLTAGE ACROSS OUTPUT SENSOR PINS A/C 200 VOLT SCALE. ENGINE RUNNING, TRANSMISSION IN DRIVE.
DOES VOLTAGE VARY FROM ZERO UP WITH VEHICLE SPEED?

YES

3
- RECONNECT OUTPUT SENSOR.
- REMOVE INSTRUMENT CLUSTER.
- DRIVE WHEELS STILL RAISED TRANSMISSION IN GEAR.
- MEASURE VOLTAGE ACROSS INSTRUMENT CLUSTER HARNESS CONNECTOR PINS B13 AND B16 WITH VOLTMETER ON A/C 200 VOLT SCALE.
- DOES VOLTAGE VARY FROM ZERO UP WITH VEHICLE SPEED.

NO

PROBLEM IS POOR CONNECTION AT OUTPUT SPEED SENSOR
OR
OPEN
OR
SHORTED CKT 821 OR 822.

YES

PROBLEM IS FAULTY CONNECTION AT INSTRUMENT CLUSTER
OR
FAULTY INSTRUMENT CLUSTER.

YES

CHECK FOR OPEN OR SHORTED CKT 437. IF OK, PROBLEM IS FAULTY INSTRUMENT CLUSTER.

NO

REPLACE OUTPUT SPEED SENSOR.

1.5 TO 2.5 VOLTS

PROBLEM IS INTERMITTENT. SEE "DIAGNOSTIC AIDS" ON FACING PAGE.

6-11-90
MS 10076

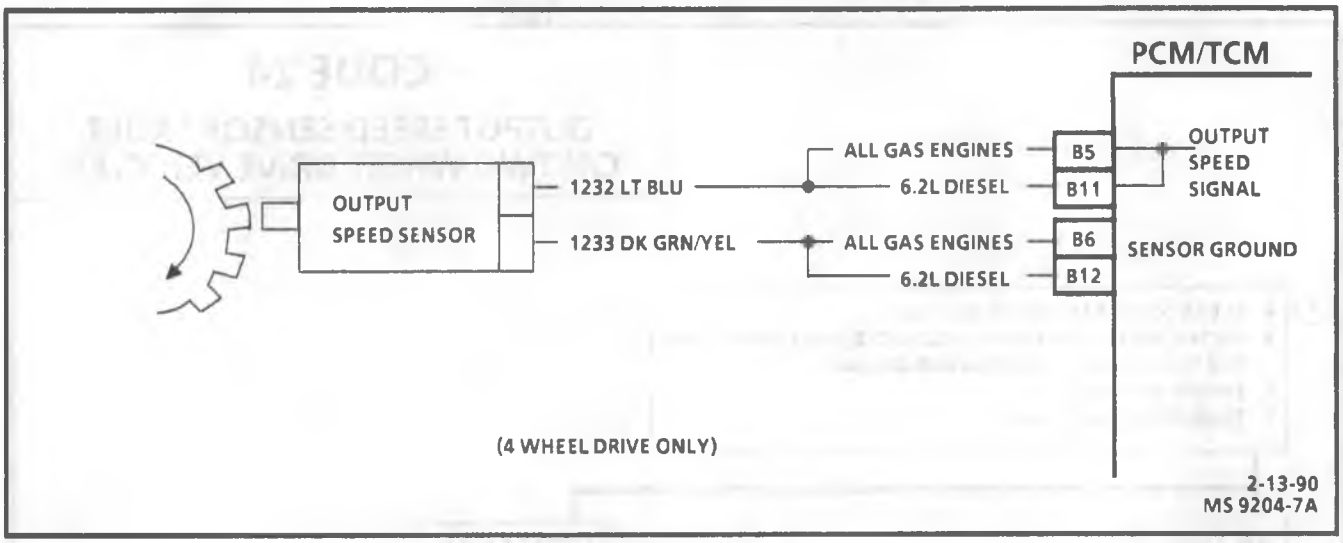

CODE 24

OUTPUT SPEED SENSOR FAULT ALL 4 WHEEL DRIVE VEHICLES

Circuit Description:

The output sensor is the magnetic induction type. Gear teeth pressed on the outside diameter of the output carrier assembly induce an alternating current in the sensor. Since vehicle speed is taken from the transfer case on four wheel drive vehicles, the transmission output sensor signal on these units goes directly to the PCM.

Code 24 will set if when engine is about 3000 rpm and output sensor speed is below 200 rpm for 1.5 seconds, park/neutral not selected.

If the input sensor is not operational at start up, this can cause the output sensor to read zero.

Test Description:

Number(s) below refer to circled number(s) on the diagnostic chart.

1. The first test checks the output speed sensor signal at the PCM.
2. The second test directly checks the output speed sensor operation.

Diagnostic Aids:

Check all connections especially those at the transmission pass-thru connector. See "PCM/TCM Intermittent Codes," in this section.

Check input sensor reading. A faulty input sensor during start up will cause the PCM to read output at 0 rpm.

CODE 24

OUTPUT SPEED SENSOR FAULT ALL 4 WHEEL DRIVE VEHICLES

1
- CLEAR CODES.
- BACK PROBE ACROSS CKT 1233 AND 1232 AT PCM CONNECTOR.
- VEHICLE WHEELS RAISED, ENGINE RUNNING IN GEAR.
- VOLTMETER ON A/C 200 VOLT SCALE.
- DOES VOLTAGE VARY FROM 0 UP WITH RPM INCREASE?

NO

2
- WITH VEHICLE STILL RAISED, DISCONNECT OUTPUT SENSOR CONNECTOR.
- ENGINE RUNNING.
- TRANSMISSION IN GEAR.
- VOLTMETER ON A/C 200 VOLT SCALE.
- MEASURE VOLTAGE ACROSS SENSOR. DOES VOLTAGE FLUCTUATE WITH RPM?

YES

PROBLEM IS:
- POOR CONNECTION AT PCM.
- POOR CONNECTION AT OUTPUT SENSOR.
- OPEN CKT 1233/CKT 1232.
- SHORTED CKT 1233.

NO

REPLACE OUTPUT SENSOR.

YES

PROBLEM IS INTERMITTENT OR MECHANICAL. SEE "DIAGNOSTIC AIDS."

7-5-90
MS 9973-6E

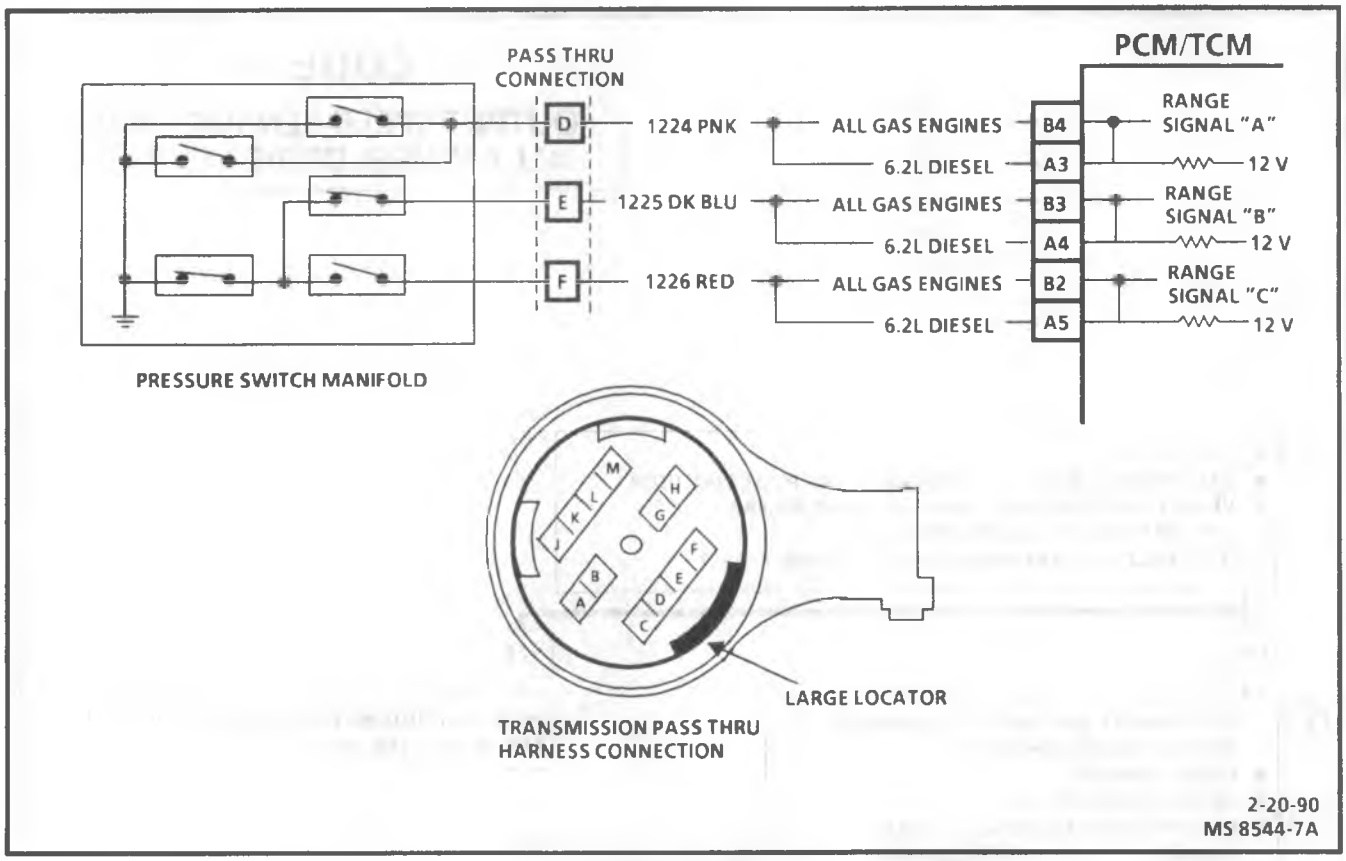

CODE 28

PRESSURE SWITCH MANIFOLD FAULT

Circuit Description:

The pressure switch manifold is actually five pressure switches combined into one unit and mounted on the valve body. The PCM/TCM supplies battery voltage to the PSM on three separate wires. By grounding one or more of these circuits through various combinations of the pressure switches inside the pressure switch manifold the PCM/TCM detects what gear range has been selected by the vehicle operator.

Test Description:

Number(s) below refer to circled number(s) on the diagnostic chart.

1. This test compares the indicated range to the range actually selected.
2. This test checks for correct voltage from the PCM/TCM to the transmission pass-thru connector.
3. This final test will detect a short to ground in any one of the three PSM range circuits.

Diagnostic Aids:

Code 28 will set if the PCM/TCM detects one of two "illegal" psm combinations.

See accompanying chart for various combinations.

Be sure to check pass-thru connector for good contact.

Valid PSM Combination Chart

	A	B	C
Park	12	0	12
Rev	0	0	12
Neutral	12	0	12
4th	12	0	0
3rd	12	12	0
2nd	12	12	12
1st	0	12	12
Illegal	0	12	0
Illegal	0	0	0

Expected Voltage Readings

CODE 28
PRESSURE SWITCH MANIFOLD FAULT

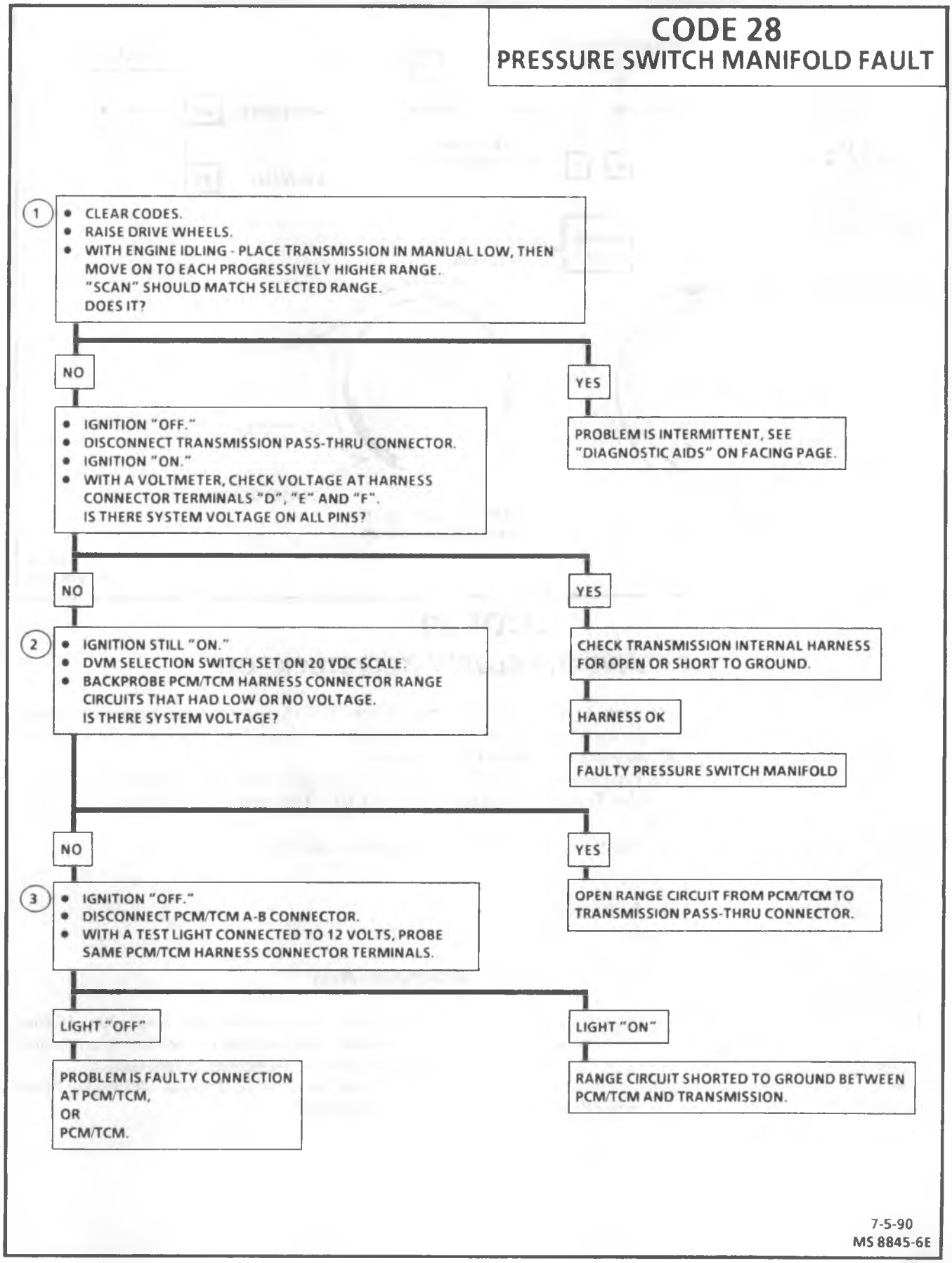

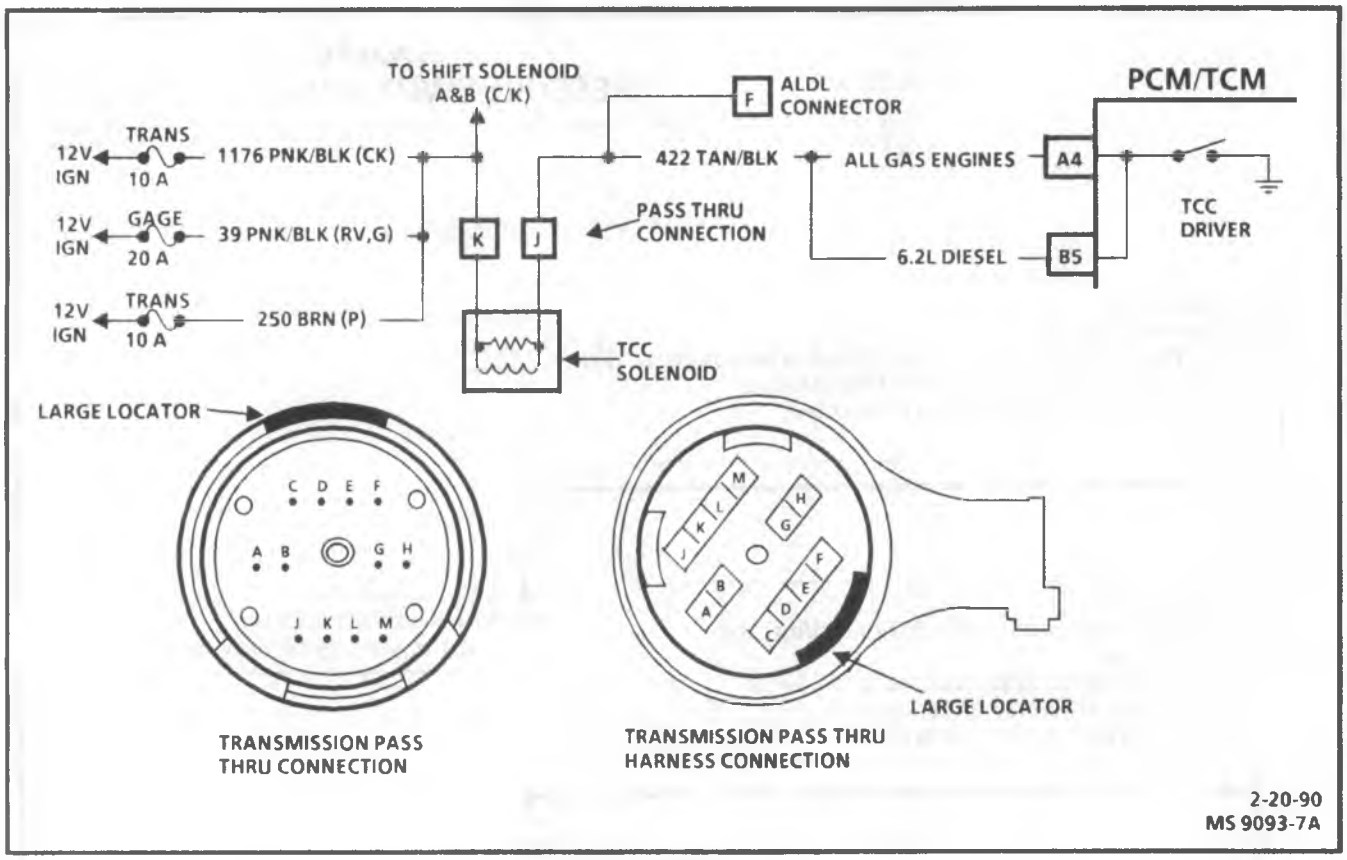

CODE 39

TORQUE CONVERTER CLUTCH (TCC) STUCK "OFF"

Circuit Description:

The purpose of the automatic transmission Torque Converter Clutch (TCC) feature is to eliminate the power loss of the torque converter stage when the vehicle is in a cruise condition. This allows the convenience of the automatic transmission and the fuel economy of a manual transmission.

Fused battery ignition voltage is supplied to the TCC solenoid which is used inside the valve body to shift a spool valve to modulate pressure to the Torque Converter Clutch (TCC). This modulated pressure normally allows some slight slippage of the TCC.

The PCM/TCM will engage TCC by grounding CKT 422 to energize the solenoid.

Code 39 will set if:

- TCC is engaged.
- TCC "slip" is greater than 65 rpm for 2 seconds.
- 2nd or 3rd gear is selected or indicated.

Test Description:

Number(s) below refer to circled number(s) on the diagnostic chart.

1. This test will determine if transmission is receiving a TCC command to the pass thru connector.
2. Checks for power to transmission.
3. Determines if PCM/TCM is commanding TCC "ON."

Diagnostic Aids:

Clear codes and re-check for Code 39. If code resets, problem could be internal to the transmission. See "Section 7A2" for Symptom Diagnosis.

Code 39 will only set in 3rd gear. TCC slip in 4th gear will set Code 68.

CODE 39

TORQUE CONVERTER CLUTCH (TCC) STUCK "OFF"

USE A "SCAN" TOOL TO CHECK THE FOLLOWING AND CORRECT IF NECESSARY:

- COOLANT TEMPERATURE
- TPS
- TTS
- VSS
- CODES - IF 24 IS PRESENT, SEE CODE 24. ALSO, PERFORM MECHANICAL CHECKS, SUCH AS LINKAGE, OIL LEVEL, ETC., BEFORE USING THIS CHART.

(1)

- IGNITION "ON," ENGINE STOPPED.
- DISCONNECT TRANS PASS-THRU CONNECTOR.
- CONNECT A TEST LIGHT BETWEEN HARNESS CONNECTOR TERMINALS "K" AND "J".
- COMMAND TCC "ON" WITH "SCAN" TOOL.
- NOTE TEST LIGHT.

LIGHT "OFF"

(2)

- INSTEAD OF TERMINAL "J", CONNECT TEST LIGHT BETWEEN GROUND AND HARNESS CONNECTOR TERMINAL "K".
- NOTE TEST LIGHT.

LIGHT "ON"

(3)

- COMMAND TCC "ON" WITH "SCAN" TOOL.
- CONNECT TEST LIGHT TO 12 VOLTS AND BACKPROBE PCM/TCM CONNECTOR CKT 422.
- NOTE LIGHT.

LIGHT "OFF"

FAULTY PCM/TCM CONNECTION OR PCM/TCM. SEE "DIAGNOSTIC AIDS" ON FACING PAGE.

LIGHT "ON"

OPEN CKT 422 FROM PCM/TCM TO TRANSMISSION PASS-THRU CONNECTOR.

LIGHT "ON"

FAULTY TRANSMISSION CONNECTOR OR TCC SOLENOID. SEE "DIAGNOSTIC AIDS" ON FACING PAGE.

LIGHT "OFF"

CHECK FOR BLOWN FUSE.

FUSE OK

REPAIR OPEN CKT 1176/39.

6-7-90
MS 8842-6E

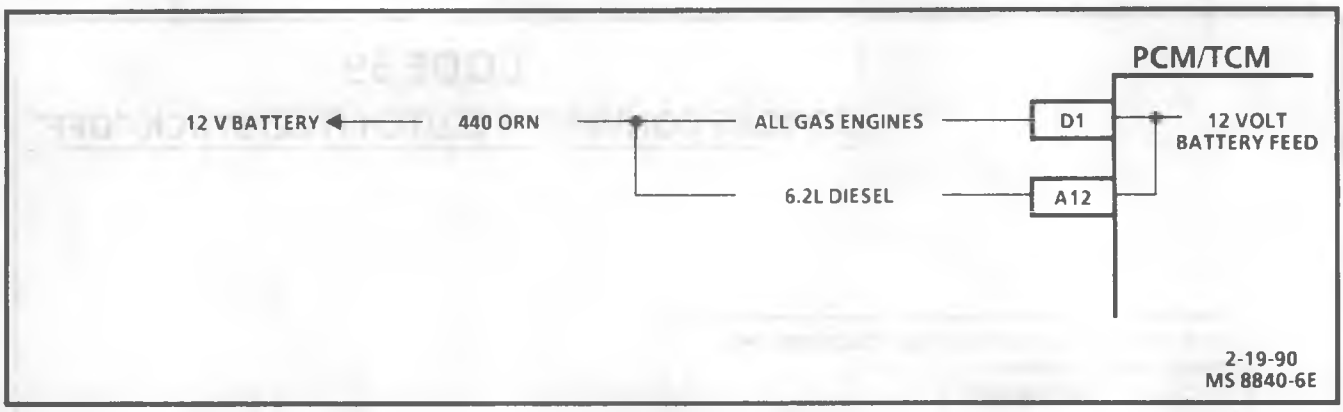

CODE 53

SYSTEM VOLTAGE HIGH

Circuit Description:

Code 53 will set when the ignition is "ON" and PCM terminal "D1" voltage is more than 19.5 volts for about 2 seconds.

During the time the failure is present, the force motor is turned "OFF," transmission shifts immediately to 2nd gear, and TCC operation is inhibited. (The setting of additional codes may result.)

Test Description:

Number(s) below refer to circled number(s) on the diagnostic chart.

1. Normal battery voltage is between 10 - 17.0 volts.
2. Checks to see if the high voltage reading is due to the generator, CKT 440 or PCM, with engine running, check voltage at the battery. If the voltage is above 19.5 volts, the PCM is OK.
3. Checks to see if generator is faulty under load condition. If the voltage is above 19.5 volts, refer to ALTERNATOR DIAGNOSIS (SECTION 6D).

Note on Intermittents:

Charging battery with a battery charger and jump-starting engine, may set Code 53. If code sets, when an accessory is operated, check for poor connections or excessive current draw. See ALTERNATOR DIAGNOSIS (SECTION 6D) of appropriate service manual for circuit details. Also, check for poor connections at starter solenoid or fusible link.

CODE 53
SYSTEM VOLTAGE HIGH

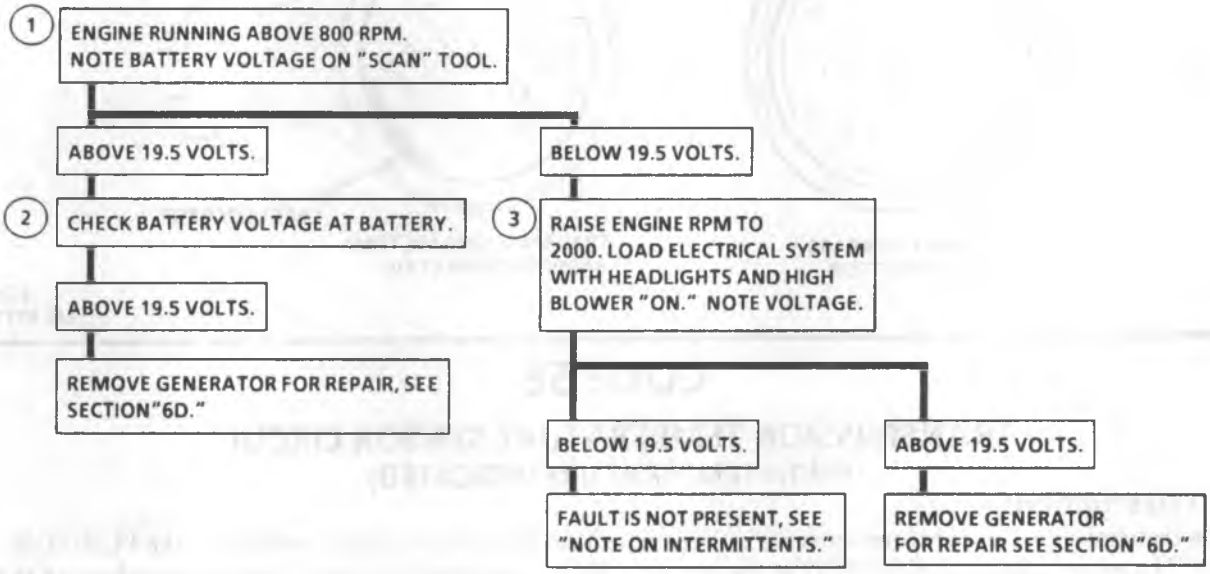

2-19-90
M5 8846-6E

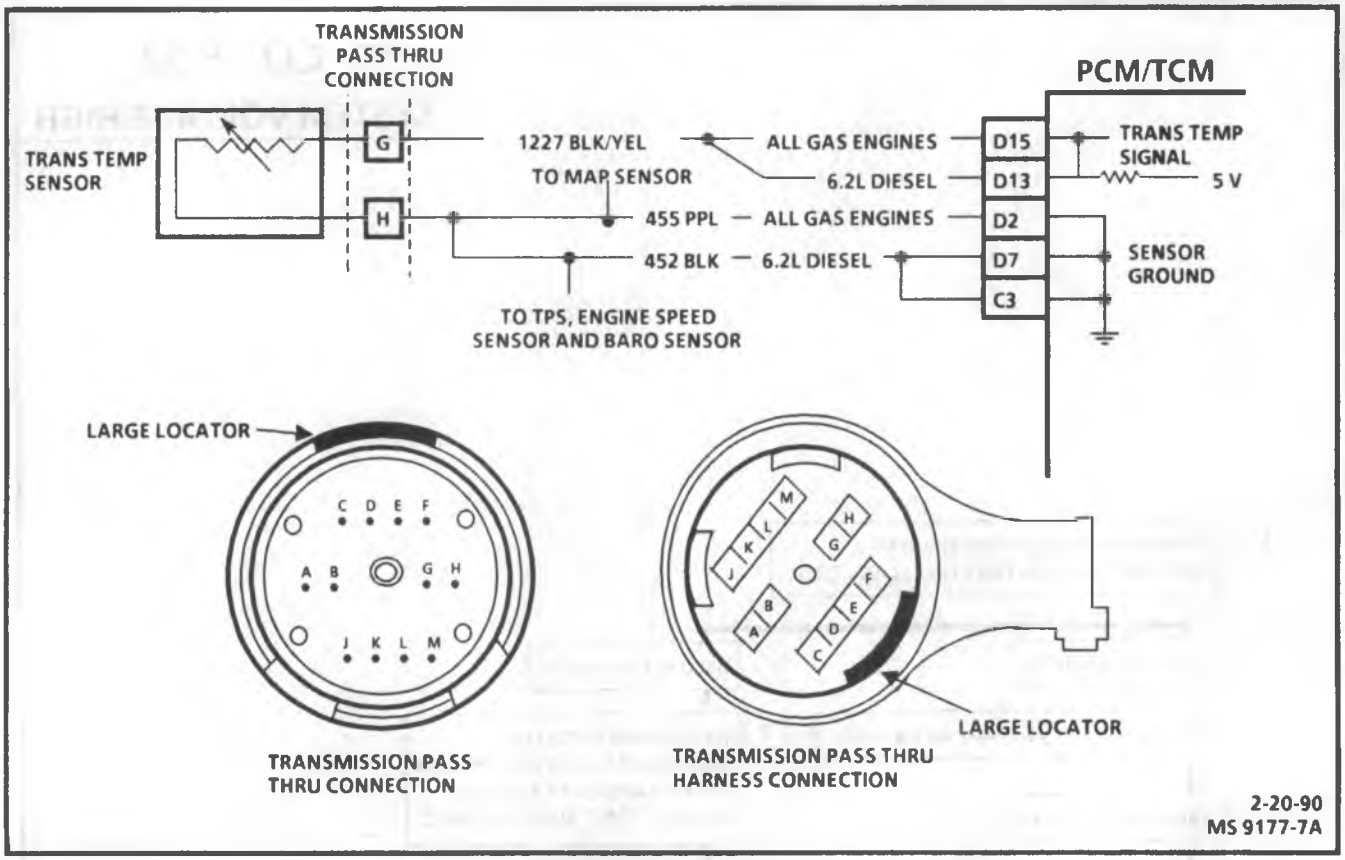

CODE 58

TRANSMISSION TEMPERATURE SENSOR CIRCUIT
(HIGH TEMPERATURE INDICATED)

Circuit Description:

The transmission temperature sensor is a thermistor that controls the signal voltage to the PCM/TCM. The PCM/TCM applies voltage on CKT 1227 to the sensor. When transmission is cold, the sensor resistance is high, therefore, the PCM/TCM will see high signal voltage.

As the transmission temperature warms, the sensor resistance becomes less and the voltage drops to normal transmission operating temperature 100°C (212°F) the voltage will measure about 1.5 to 2.0 volts.

Test Description:

Number(s) below refer to circled number(s) on the diagnostic chart.

1. Code 58 will set if:
   - Signal voltage indicates a transmission temperature above 154°C - 309°F for 1 second.
2. This test will determine if CKT 1227 is shorted to ground which will cause the conditions for Code 58.

Diagnostic Aids:

Check harness routing for a potential short to ground in CKT 1227.

"Scan" tool displays transmission temperature in degrees Centigrade. After transmission is running, the temperature should rise steadily to about 100°C then stabilize.

See "PCM/TCM Intermittent Codes or Performance" in this section.

The temperature to resistance value scale at the right, may be used to test the transmission sensor at the various temperature levels to evaluate the possibility of a "skewed" sensor. A "skewed sensor could result in delayed garage shifts or TCC enabled complaints.

CODE 58

TRANSMISSION TEMPERATURE SENSOR CIRCUIT
(HIGH TEMPERATURE INDICATED)

1. DOES "SCAN" TOOL DISPLAY TRANSMISSION TEMPERATURE OF 154°C OR HIGHER?

- YES
  2. • IGNITION "OFF."
     • DISCONNECT TRANSMISSION PASS-THRU CONNECTOR. "SCAN" TOOL SHOULD DISPLAY TEMPERATURE BELOW -40°C. DOES IT?
     - YES
       - CHECK TRANSMISSION INTERNAL HARNESS FOR SHORT TO GROUND.
       - HARNESS OK
       - REPLACE TRANSMISSION TEMPERATURE SENSOR.
     - NO
       - • CKT 1227 SHORTED TO GROUND OR FAULTY PCM/TCM OR CONNECTIONS.
- NO
  - CODE 58 IS INTERMITTENT. IF NO ADDITIONAL CODES WERE STORED, REFER TO "DIAGNOSTIC AIDS" ON FACING PAGE.

DIAGNOSTIC AID

TRANSMISSION SENSOR - TEMP TO RESISTNACE (APPROXIMATE)

°C	°F	MINIMUM RESISTANCE	NOMINAL RESISTANCE	MAXIMUM RESISTANCE
-40°C	-40°F	80965	100544	120123
-30°C	-20°F	42701	52426	62151
-20°C	-4°F	23458	28491	33524
-10°C	14°F	13366	16068	18770
0°C	32°F	7871	9370	10869
10°C	50°F	4771	5640	6508
20°C	68°F	2981	3500	4018
30°C	86°F	1915	2232	2550
40°C	104°F	1260	1460	1660
50°C	122°F	848.8	977.1	1105
60°C	140°F	584.1	668.7	753.4
70°C	158°F	410.3	467.2	524.2
80°C	176°F	293.7	332.7	371.7
90°C	194°F	213.9	241.0	268.2
100°C	212°F	158.1	177.4	196.8
110°C	?	118.8	132.6	146.5
120°C	?	90.40	100.6	110.8
130°C	?	69.48	77.29	85.11
140°C	?	53.96	60.13	66.29
150°C	?	42.43	47.31	52.20

2-21-90
MS 8847-6E

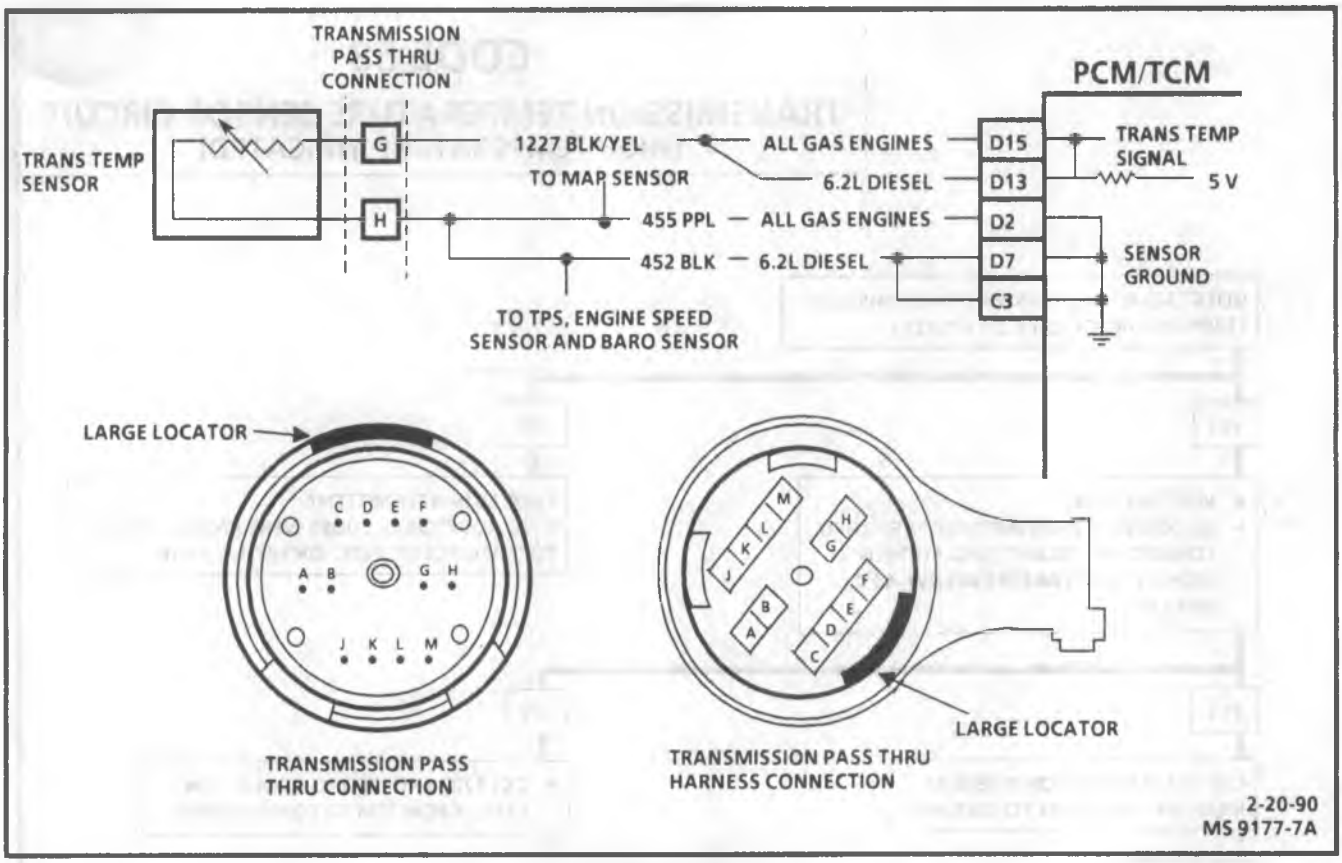

CODE 59

TRANSMISSION TEMPERATURE SENSOR CIRCUIT
(LOW TEMPERATURE INDICATED)

Circuit Description:

The Transmission Temperature Sensor is a thermistor that controls the signal voltage to the PCM/TCM. The PCM/TCM applies 5 volts to the sensor on CKT 1227. When the transmission is cold, the sensor resistance is high, therefore, the PCM/TCM will see high signal voltage.

As the transmission temperature warms, the sensor resistance becomes less and the voltage drops. At normal transmission operating temperature 100°C (212°F), the voltage will measure about 1.5 to 2.0 volts.

Test Description:

Number(s) below refer to circled number(s) on the diagnostic chart.

1. Code 59 will set if:
   - Signal voltage indicates a transmission temperature below -48°C (-54°F) for 1 second.
2. This test simulates a Code 58. If the PCM/TCM recognizes the low signal voltage (high temperature), and the "Scan" reads 151°C (304°F) or above, the PCM/TCM and wiring are OK.
3. This test will determine if CKT 1227 is open. There should be 5 volts present at the sensor connector if measured with a DVOM.

Diagnostic Aids:

"Scan" tool displays transmission temperature in degrees Centigrade. After transmission is running, the temperature should rise steadily to about 100°C (212°F) then stabilize.

A faulty connection or an open in CKT 455 or CKT 1227 will result in a Code 59.

The "Temperature to Resistance Value" scale at the right may be used to test the coolant sensor at various temperature levels to evaluate the possibility of a "skewed" (mis-scaled) sensor. A "skewed" sensor could result in firm garage shifts, or TCC enabled complaint.

CODE 59

TRANSMISSION TEMPERATURE SENSOR CIRCUIT
(LOW TEMPERATURE INDICATED)

1. DOES "SCAN" TOOL DISPLAY TRANSMISSION TEMPERATURE OF -48°C OR LESS?

- YES → 2
- NO → CODE 59 IS INTERMITTENT. IF NO ADDITIONAL CODES WERE STORED. REFER TO "DIAGNOSTIC AIDS" ON FACING PAGE.

2.
- IGNITION "OFF."
- DISCONNECT TRANSMISSION PASS-THRU CONNECTOR.
- JUMPER BETWEEN HARNESS CONNECTOR TERMINALS "G" AND "H".
- IGNITION "ON" "SCAN" SHOULD DISPLAY 151°C OR MORE. DOES IT?

- NO → 3
- YES → CHECK FOR OPEN AT INTERNAL TRANSMISSION WIRING HARNESS OR CONNECTOR. → OK → REPLACE SENSOR

3.
- JUMPER CKT 1227 TO GROUND "SCAN" TOOL SHOULD DISPLAY OVER 151°C DOES IT?

- YES → OPEN SENSOR GROUND CIRCUIT, FAULTY CONNECTION OR FAULTY PCM/TCM.
- NO → OPEN CKT 1227, FAULTY CONNECTION AT PCM/TCM OR FAULTY PCM/TCM.

DIAGNOSTIC AID

TRANSMISSION SENSOR - TEMP TO RESISTANCE (APPROXIMATE)

°C	°F	MINIMUM RESISTANCE	NOMINAL RESISTANCE	MAXIMUM RESISTANCE
-40°C	-40°F	80965	100544	120123
-30°C	-20°F	42701	52426	62151
-20°C	-4°F	23458	28491	33524
-10°C	14°F	13366	16068	18770
0°C	32°F	7871	9370	10869
10°C	50°F	4771	5640	6508
20°C	68°F	2981	3500	4018
30°C	86°F	1915	2232	2550
40°C	104°F	1260	1460	1660
50°C	122°F	848.8	977.1	1105
60°C	140°F	584.1	668.7	753.4
70°C	158°F	410.3	467.2	524.2
80°C	176°F	293.7	332.7	371.7
90°C	194°F	213.9	241.0	268.2
100°C	212°F	158.1	177.4	196.8
110°C	?	118.8	132.6	146.5
120°C	?	90.40	100.6	110.8
130°C	?	69.48	77.29	85.11
140°C	?	53.96	60.13	66.29
150°C	?	42.43	47.31	52.20

2-21-90
MS 8848-6E

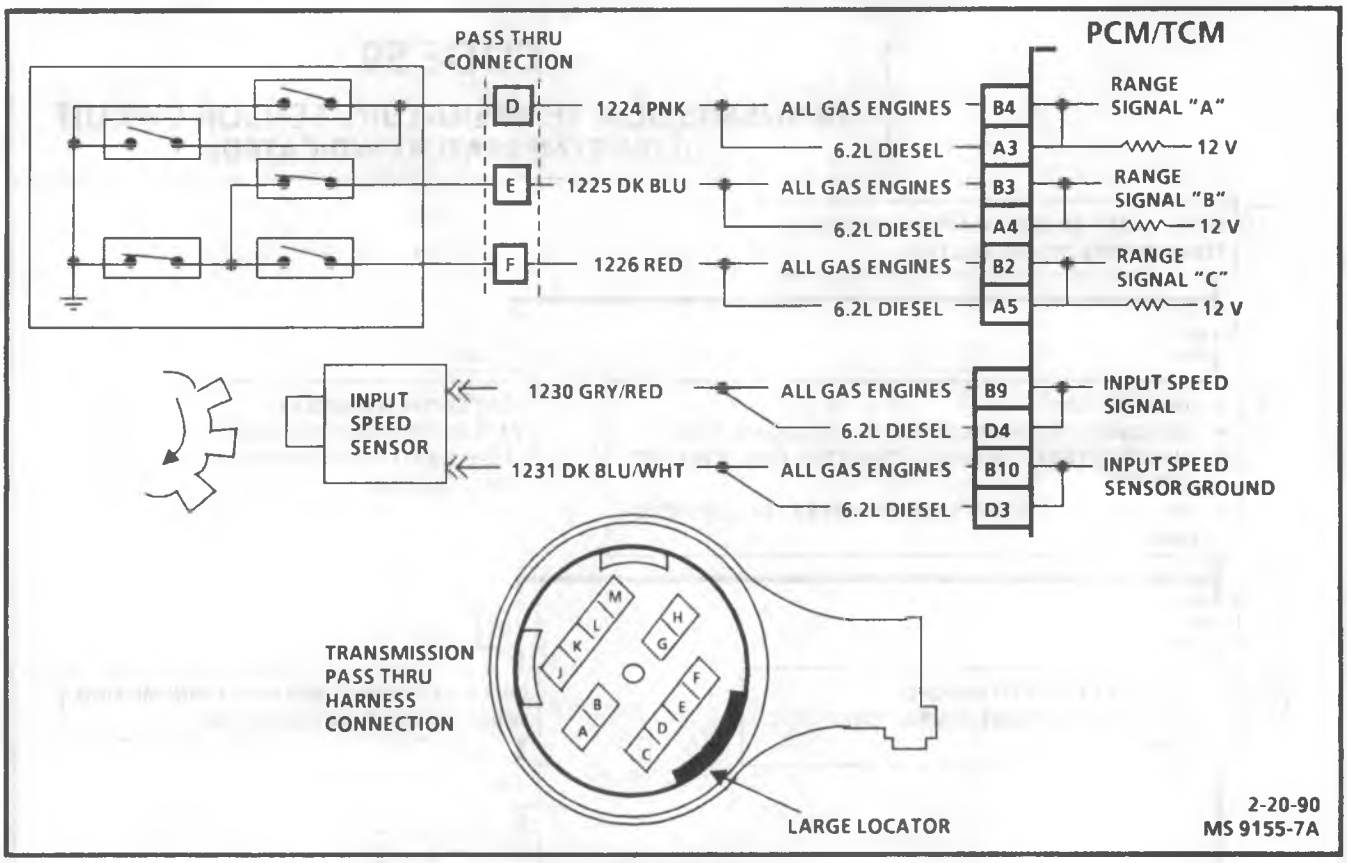

CODE 68

OVERDRIVE RATIO ERROR

Circuit Description:

The PCM/TCM monitors the difference in engine rpm and input shaft rpm. With transmission in "drive," the "Scan" tool reading should show engine speed closely matching input speed.

Test Description:

Number(s) below refer to circled number(s) on the diagnostic chart.

1. Code 68 will set if:
   - Engine speed is 200 rpm higher than input speed.
   - 4th gear is indicated.
   - TCC is enabled.
   - All conditions are met for 2 seconds.
2. This test monitors signal sent to the PCM/TCM from the transmission.
3. This test confirms engine rpm signal to PCM/TCM.

Diagnostic Aids:

- Check for spread connectors at pass-thru connector ETC.
- Will set when going to default (2nd gear).
- Refer to "PCM/TCM Intermittent Codes" in this section.
- Always follow PRELIMINARY CHECK PROCEDURE (SECTION 7A).
- Refer to SYMPTOM DIAGNOSIS (SECTION 7A2) for further information on "Internal Transmission Problems."

CODE 68
OVERDRIVE RATIO ERROR

1
- CLEAR CODES.
- RAISE DRIVE WHEELS.
- ENGINE RUNNING.
- TRANSMISSION AT OPERATING TEMPERATURE.
- RANGE SELECTOR IN (D).
- WHEELS TURNING.
- SPEEDOMETER INDICATING 45 MPH.
- TCC ENGAGED.

DOES SCAN TOOL INDICATE CODE 68?

YES →

2
- CLEAR CODES.
- DRIVE WHEELS STILL RAISED AND ENGINE RUNNING.
- MANUALLY SHIFT TO EACH HIGHER RANGE. "SCAN" SHOULD MATCH RANGE SELECTED.

DOES IT?

NO →

- IGNITION "OFF."
- DISCONNECT TRANSMISSION PASS-THRU CONN. HARNESS.
- IGNITION "ON."
- WITH DVM, CHECK VOLTAGE AT HARNESS CONNECTOR CKT 1224, CKT 1225 AND CKT 1226.

IS THERE SYSTEM VOLTAGE AT ALL PINS?

YES →

CHECK INTERNAL TRANSMISSION HARNESS FOR OPEN OR SHORTS.

OK →

REPLACE PRESSURE SWITCH MANIFOLD

NO →

- IGNITION STILL "ON."
- WITH A VOLTMETER ON 20V DC SCALE, BACKPROBE PCM/TCM CONN. CIRCUITS THAT HAD LOW OR NO VOLTAGE. METER SHOULD READ SYSTEM VOLTAGE.

DOES IT?

NO →

- IGNITION "OFF."
- DISCONNECT PCM/TCM A-B CONNECTOR.
- WITH A TEST LIGHT CONNECTED TO 12 VOLTS, PROBE HARNESS CONNECTOR CIRCUIT(S) THAT HAD LOW OR NO VOLTAGE.

LIGHT "ON" →

CIRCUIT SHORTED TO GND BETWEEN PCM/TCM AND TRANSMISSION.

LIGHT "OFF" →

FAULTY CONNECTION AT PCM/TCM OR, PCM/TCM

YES →

OPEN CIRCUIT FROM PCM/TCM TO TRANSMISSION

NO →

CODE 68 IS INTERMITTENT. IF NO ADDITIONAL CODES WERE STORED, REFER TO "DIAGNOSTIC AIDS" ON FACING PAGE.

YES →

3
- DRIVE WHEELS RAISED AND ENGINE RUNNING.
- SELECTOR IN "D".
- DVM ON AC 200V SCALE BACK PROBE ACROSS PCM/TCM CONNECTOR CKT 1230 AND 1231.
- SLOWLY INCREASE RPM.
- NOTE VOLT METER READING. VOLTAGE SHOULD VARY WITH RPM.

DOES IT?

NO →

- DRIVE WHEELS RAISED
- TRANSMISSION IN DRIVE
- WITH DVM AT 200V AC SCALE MEASURE VOLTAGE ACROSS TRANSMISSION INPUT SENSOR TERMINALS.
- NOTE VOLTMETER. VOLTAGE SHOULD VARY. WITH RPM.

DOES IT?

YES →

CHECK FOR:
- OPEN CKT 1230 OR 1231.
- SHORT TO GROUND CKT 1230.
- FAULTY PCM/TCM CONNECTION.

NO →

FAULTY INPUT SENSOR

YES →

INTERNAL TRANSMISSION PROBLEM, SEE "DIAGNOSTIC AIDS" ON FACING PAGE.

6-26-90
MS 8843-6E

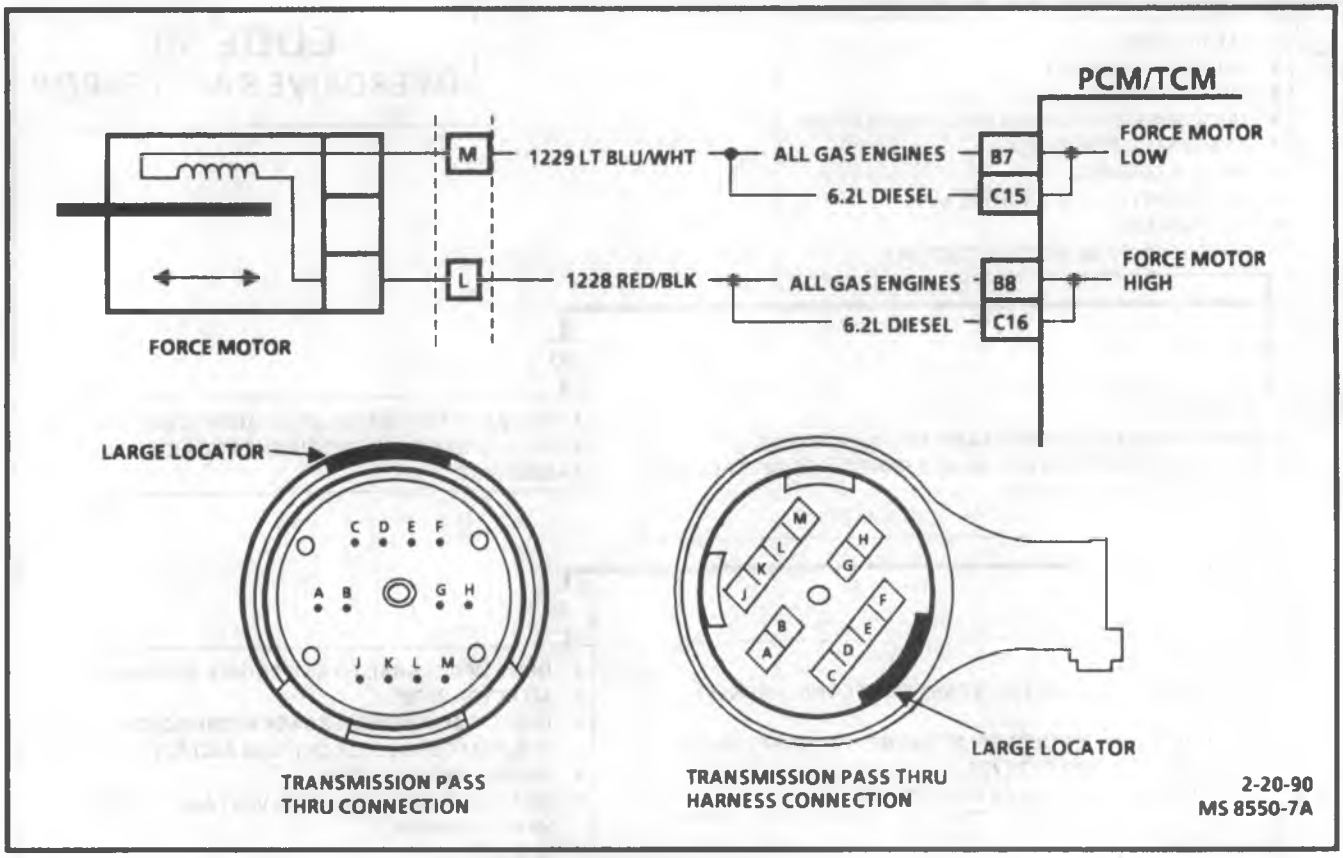

CODE 73

FORCE MOTOR CURRENT
(CURRENT ERROR)
ALL ENGINES

Circuit Description:

The force motor is a PCM/TCM controlled device used to regulate transmission line pressure. The PCM/TCM looks at TPS voltage, engine rpm and other inputs to determine the line pressure appropriate for a given load, then regulates the pressure by applying a varying amperage. The applied amperage can vary from 1 to 1.1 amp. The PCM/TCM then monitors the amperage at the return line and if the return amperage varies more than .16 amp from the commanded amperage for a duration of at least 1 second, Code 73 is set. Once Code 73 is set, the force motor is disabled and full line pressure will be applied until the next time the ignition key is cycled. Code 73 will remain stored but the force motor will resume normal function until the conditions for Code 73 re-occur.

Test Description:

Number(s) below refer to circled number(s) on the diagnostic chart.

1. This procedure verifies an amperage difference of .16 amp or more and tests the PCM/TCM's ability to control amperage to the force motor.
2. This part of the test checks the force motor for internal shorts and integrity.

Diagnostic Aids:

Check for poor connections at PCM/TCM and especially at transmission pass-thru connector.

CODE 73

FORCE MOTOR CURRENT (CURRENT ERROR) ALL ENGINES

(1)
- CLEAR CODES.
- ENGINE RUNNING, TRANSMISSION IN NEUTRAL.
- WITH "SCANNER," APPLY .7 AMPS TO FORCE MOTOR.
- OBSERVE ACTUAL OR RETURN AMP READING. DOES IT MATCH THE .7 AMPS COMMANDED?

YES → PROBLEM IS INTERMITTENT, SEE "DIAGNOSTIC AIDS."

NO →

(2)
- ENGINE "OFF," KEY "OFF."
- RAISE VEHICLE.
- REMOVE TRANSMISSION PASS-THRU CONNECTOR.
- WITH A DVOM, MEASURE RESISTANCE ACROSS FORCE MOTOR TERMINALS "M" AND "L".

LESS THAN 3.5 OHMS → CHECK INTERNAL TRANSMISSION HARNESS. IF OK, REPLACE FORCE MOTOR.

MORE THAN 3.5 OHMS →
- PASS-THRU CONNECTOR STILL DISCONNECTED.
- KEY "ON."
- WITH SCAN TOOL, APPLY .7 AMPS.
- WITH A DVM PROBE PIN "L" OF THE TRANSMISSION VEHICLE HARNESS TO GROUND AND MEASURE THE VOLTAGE. IS THERE SYSTEM VOLTAGE?

NO →
AT PCM/TCM CONNECTOR, BACKPROBE CKT 1228 ACROSS AND GROUND, WITH SCAN APPLY .7 AMPS. IS THERE VOLTAGE?

YES →
- KEY OFF.
- DISCONNECT PCM/TCM CONNECTOR.
- WITH TEST LIGHT CONNECTED TO 12 VOLTS, BACKPROBE CKT 1228.

NO → FAULTY PCM/TCM CONNECTOR OR FAULTY PCM/TCM.

NO → OPEN CKT 1228.

YES → CIRCUIT 1228 IS SHORTED TO GROUND.

YES →
- KEY "OFF."
- RECONNECT PASS-THRU CONNECTOR.
- KEY "ON."
- WITH A DVM PROBE ACROSS CKT 1229 AND GROUND.
- IS THERE SYSTEM VOLTAGE?

YES → FAULTY PCM/TCM CONNECTOR OR FAULTY PCM/TCM.

NO →
- KEY "OFF."
- DISCONNECT PASS-THRU CONNECTOR.
- WITH TEST LIGHT CONNECTED TO 12 VOLTS, PROBE CKT 1229. IS THERE A LIGHT?

YES → CKT 1229 IS SHORTED TO GROUND.

NO →
- WITH AN OHMMETER, CHECK CONTINUITY FROM PCM/TCM CONNECTOR TO PASS-THRU CONNECTOR. IS THERE CONTINUITY?

NO → CKT 1229 IS OPEN.

YES → POOR PASS-THRU CONNECTOR CONNECTION OR OPEN IN INTERNAL TRANSMISSION HARNESS.

7-6-90
MS 8849-6E

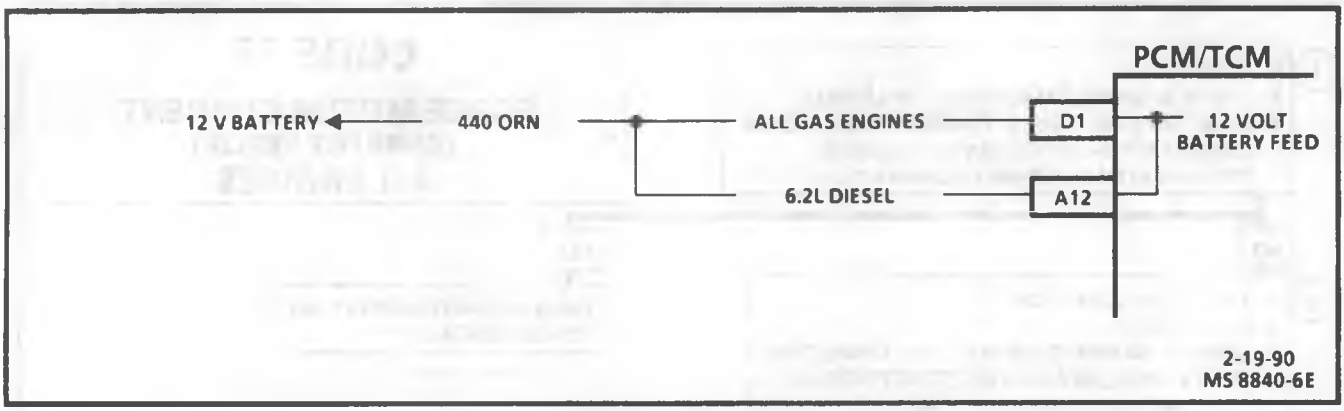

CODE 75

SYSTEM VOLTAGE LOW

Circuit Description:

Code 75 will set when the ignition is "ON" and PCM terminal "D1" voltage is less than 8.6 volts for about 4 seconds.

During the time the failure is present, the force motor is turned "OFF," maintaining 2nd gear only, and inhibiting 4th gear and TCC operation.

Test Description: Number(s) below refer to circled number(s) on the diagnostic chart.

1. Normal battery voltage is between 10 -17.0 volts.
2. Checks to see if the low voltage reading is due to the generator, CKT 440 or PCM/TCM, with engine running check voltage at the battery. If the voltage is below 8.6 volts, the PCM/TCM is OK.

Note on Intermittents:

If Code sets when an accessory is operated, check for poor connections or excessive current draw. See "Electrical Diagrams and Diagnosis" manual for circuit details. Also, check for poor connections at starter solenoid or fusible link.

Minimum voltage allowed for Code 75 to set is on a graduated scale and will change with temperature. Minimum voltage at -40°C (-40°F) is 6.7 volts, minimum at 150°C (-304°F) is 10.5 volts, 8.6 volts is the minimum voltage at 90°C (194°F).

CODE 75
SYSTEM VOLTAGE LOW

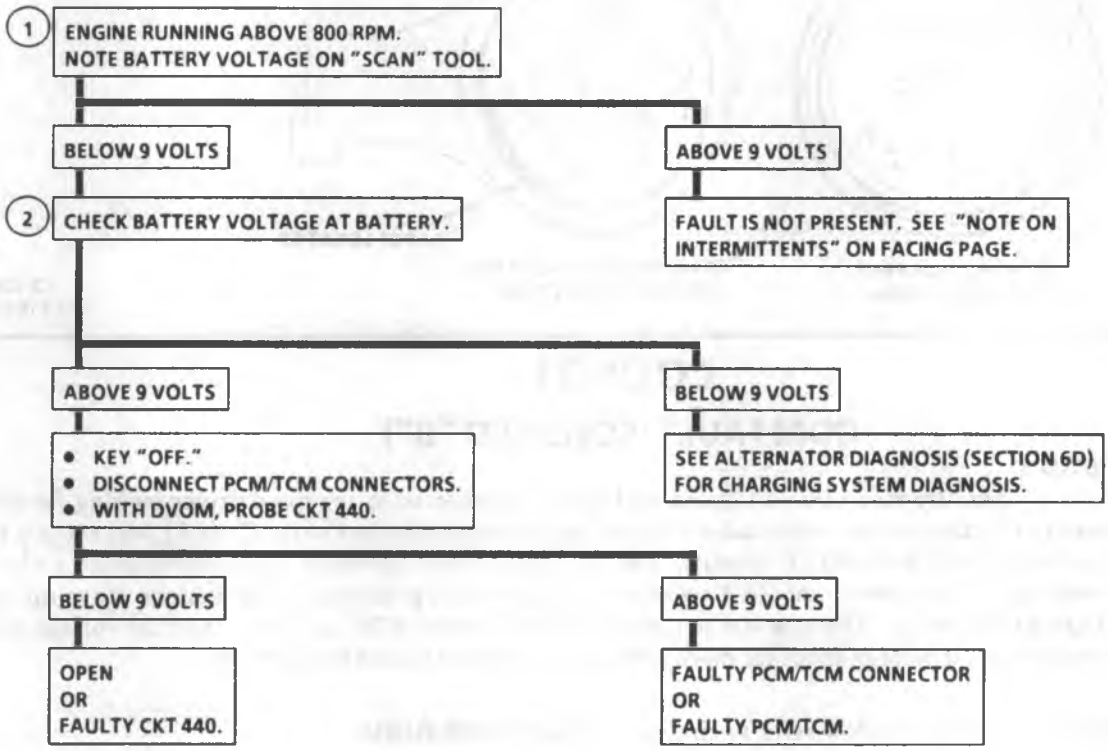

6-7-90
MS 8850-6E

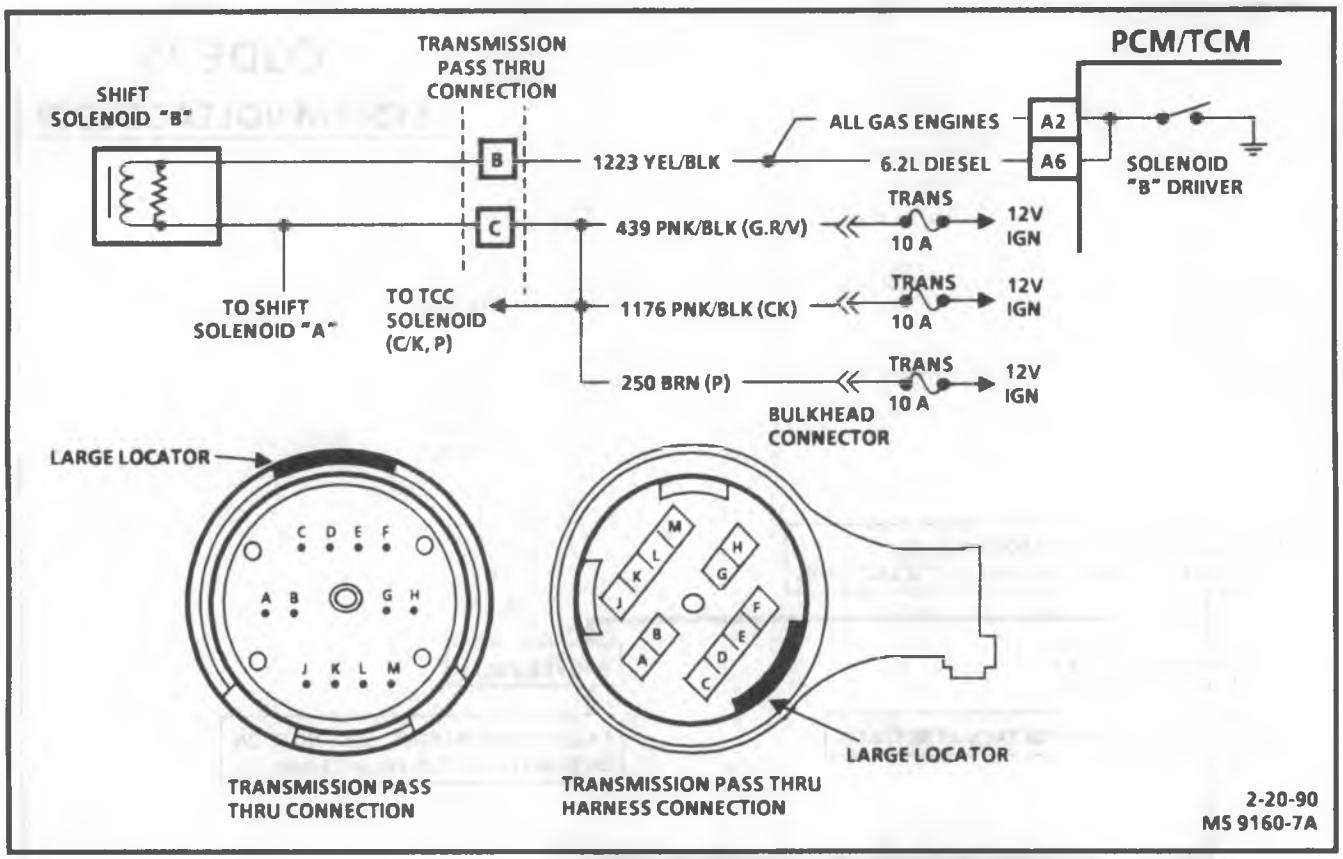

CODE 81

QDM FAULT (SOLENOID "B")

Circuit Description:

The PCM/TCM continually monitors voltage on each circuit connected to the quad driver looking for either low or high voltage depending on the commanded state of the devices connected to it. Code 81 will set if a fault has been detected on the shift Solenoid "B" circuit. For example, if shift Solenoid "B" is commanded on by the PCM/TCM, the voltage on that circuit should drop when the solenoid is grounded, if the voltage stays up for at least .5 second, Code 81 will be set. The opposite is also true if shift Solenoid "B" is "OFF" then the voltage on the circuit should remain high, if voltage drops for more than .5 second, then Code 81 will be set.

Test Description:

Number(s) below refer to circled number(s) on the diagnostic chart.

1. This procedure checks shift Solenoid "B" and the internal transmission wiring for shorts.
2. This block checks for power to shift Solenoid "B" from the ignition through the transmission fuse.
3. Test three verifies that CKT 1223 is not shorted to ground.
4. This test checks the ability of the PCM/TCM to ground or control shift Solenoid "B".
5. The final test verifies that CKT 1223 is not shorted to ground.

Diagnostic Aids:

Check all connections especially those at the transmission pass-thru connector. See "PCM/TCM Intermittent Codes" in this section.

CODE 81

QDM FAULT (SOLENOID "B")

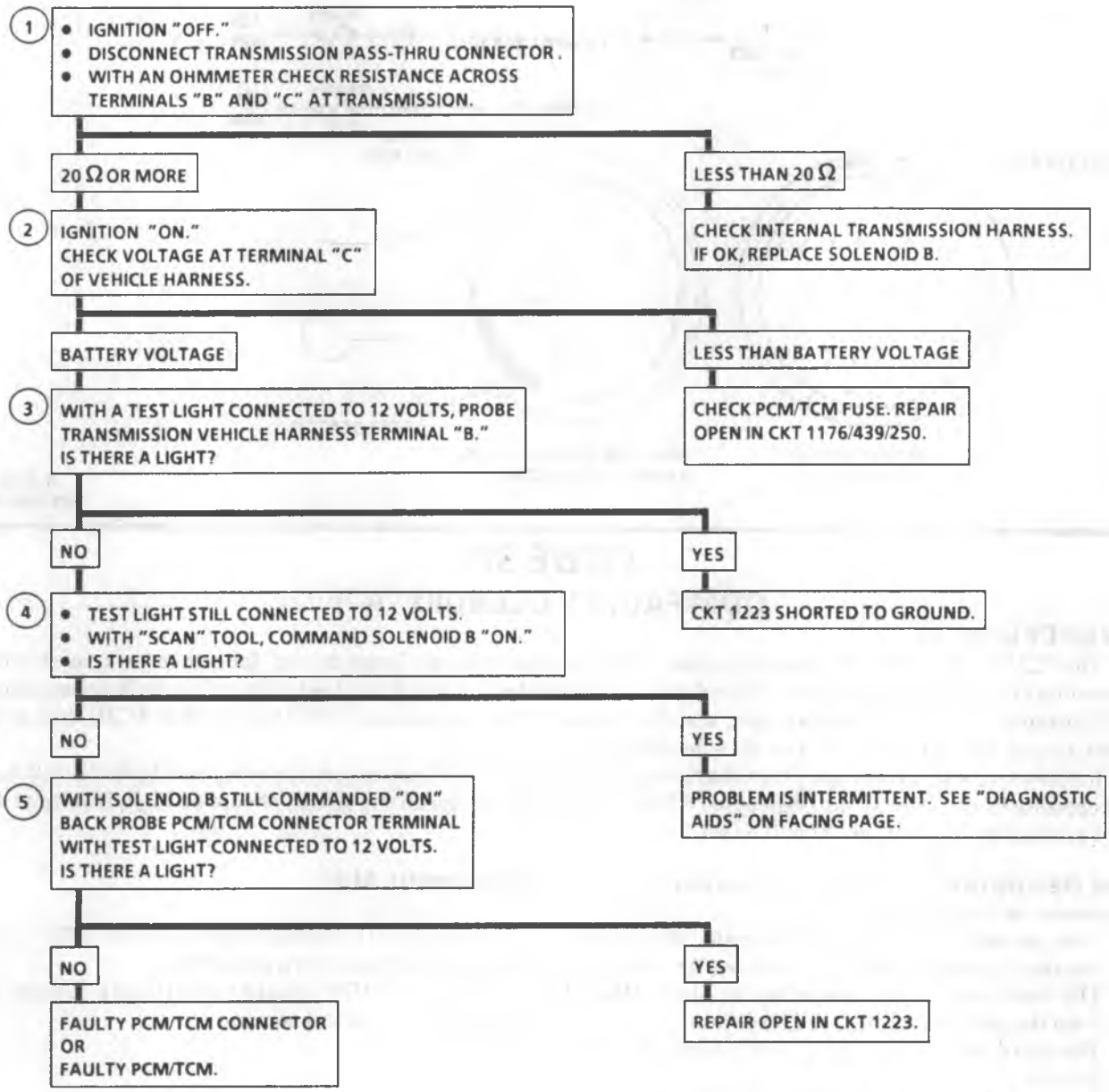

7-5-90
MS 8851-6E

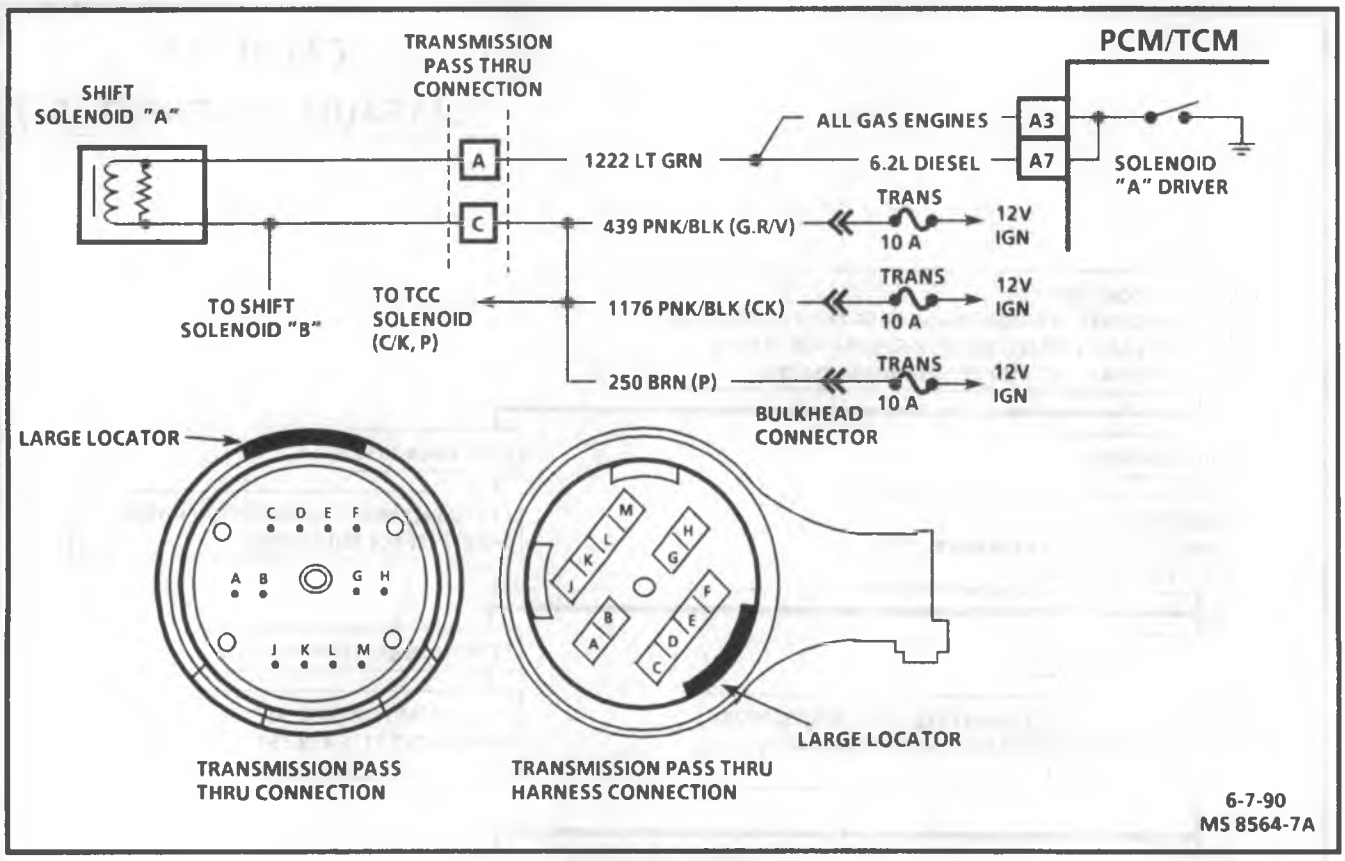

CODE 82

QDM FAULT (SOLENOID "A")

Circuit Description:

The PCM/TCM continually monitors each circuit connected to the "quad driver" for either low or high voltage depending on the commanded state of the device connected to it. Code 82 will set if there is a fault detected on the shift Solenoid "A" circuit. For example, if shift solenoid "A" is commanded **"ON"** by the PCM/TCM, then voltage on the circuit should drop as soon as the solenoid grounds.

If, however, voltage remains high for 2 seconds after the "ON" command is given, then Code 82 will be set. The opposite is also true, if shift Solenoid "A" is "OFF" then voltage on the circuit should be high, if voltage drops for .5 seconds or longer, Code 82 will be set.

Test Description:

Number(s) below refer to circled number(s) on the diagnostic chart.

1. This procedure checks shift Solenoid "A" and the internal transmission wiring harness for shorts.
2. The next check is for power to the shift solenoid from the ignition through the fuse.
3. The third test checks CKT 1222 for a short to ground.
4. This test checks the PCM/TCM's ability to ground or control shift Solenoid "A".

Diagnostic Aids:

Check all connections, especially at the transmission pass-thru connector.

See "PCM/TCM Intermittent Codes and Performance" in this section.

CODE 82
QDM FAULT (SOLENOID "A")

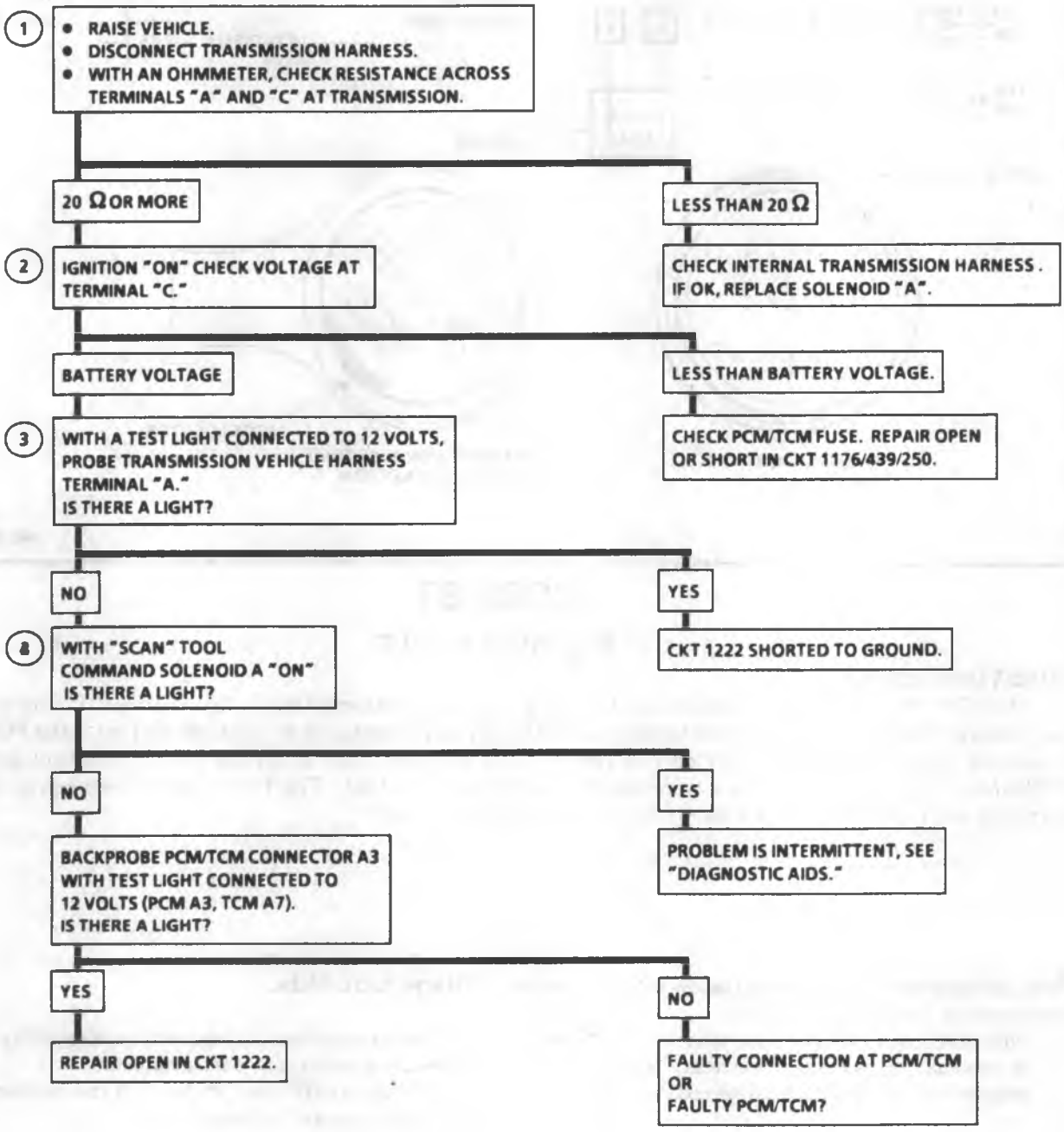

2-21-90
MS 8852-7A

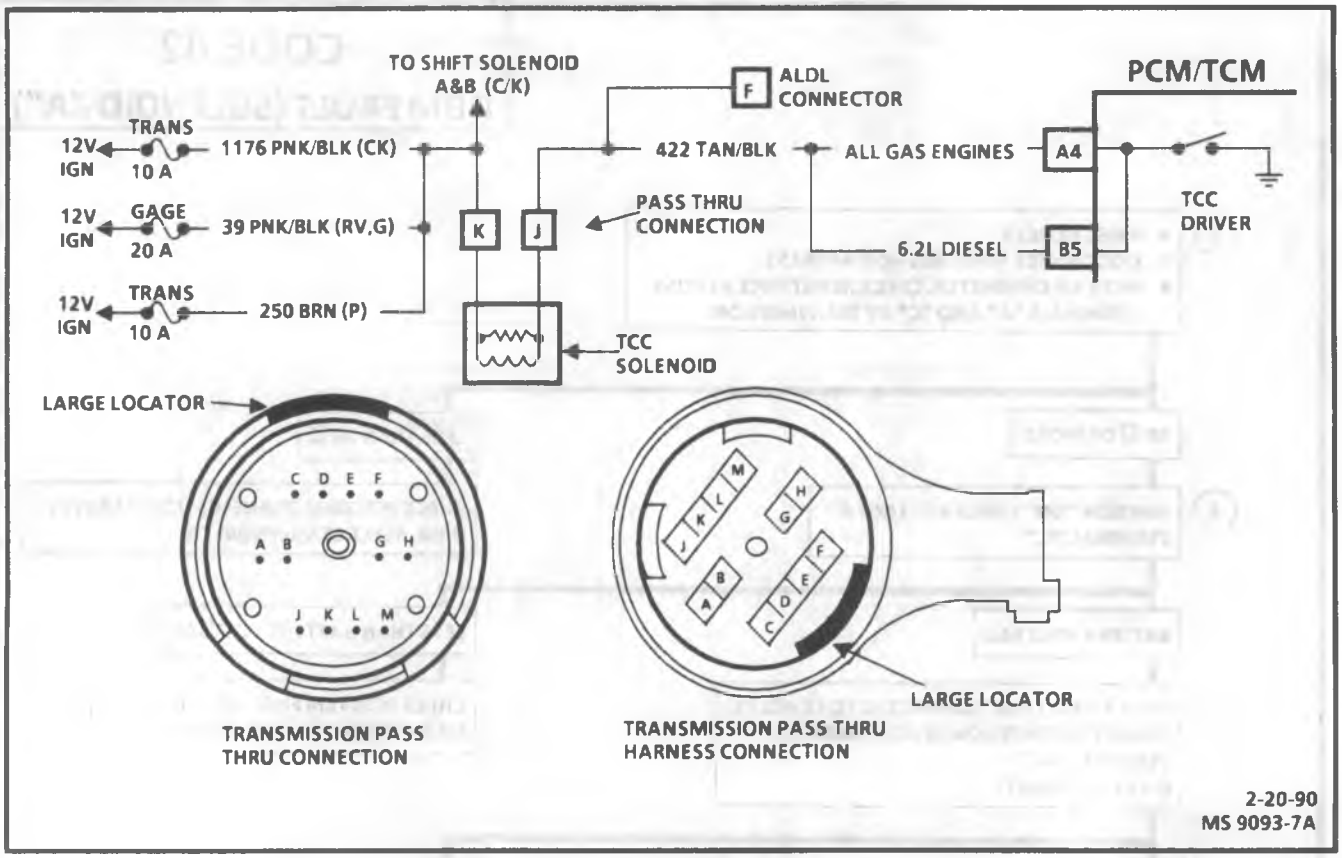

CODE 83

TCC QDM FAULT

Circuit Description:

The PCM/TCM continually monitors voltage on each circuit connected to the "quad-driver" for either low or high voltage, depending on the commanded state of the device connected to it. Code 83 will set if the PCM/TCM detects an inappropriate reading on the TCC circuit. For example, if the TCC duty cycle is 0, but voltage on the TCC circuit drops as if the solenoid were applied then Code 83 will set. The TCC solenoid, because of it's large current draw, is connected to two terminals of a single "Quad-Driver."

Test Description:

Number(s) below refer to circled number(s) on the diagnostic chart.

1. This test checks for low resistance in the solenoid or internal transmission harness. The test also determines which circuit triggered the fault.

Diagnostic Aids:

Be sure to check all connections especially those at the transmission pass-thru connector.

If they are OK, see "PCM/TCM Intermittent Codes and Performance" in this section.

CODE 83
TCC QDM FAULT

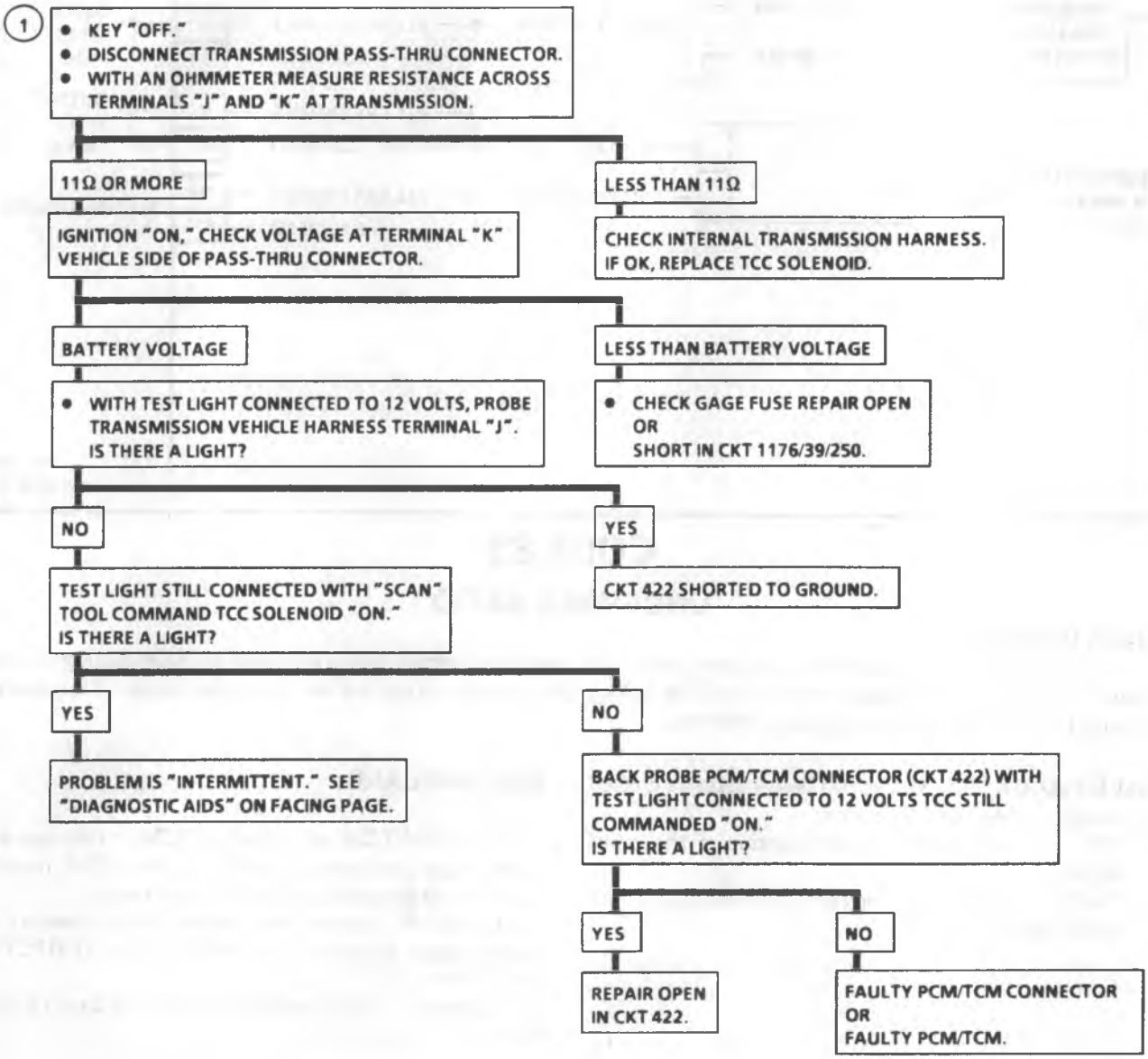

7-5-90
MS 8858-6E

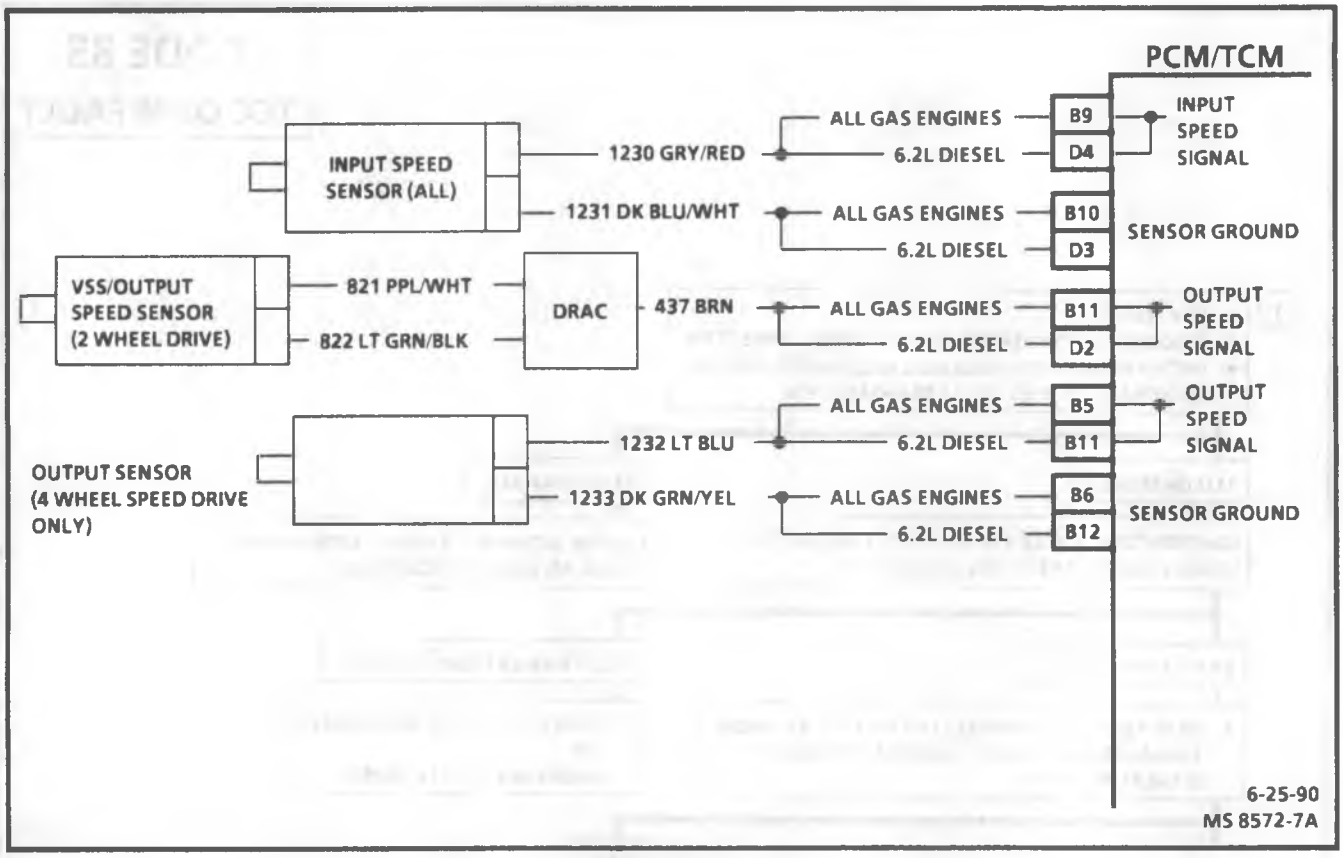

CODE 85

UNDEFINED RATIO

Circuit Description:

The PCM/TCM calculates the actual gear ratio from input and output speed readings while in each gear, then compares these to what the gear ratio should be, taking into consideration the selected gear range. This monitor includes reverse but does not include overdrive.

Test Description:

Number(s) below refer to circled number(s) on the diagnostic chart.

1. This test verifies the proper function of the input sensor.
2. Test two verifies the correct functioning of the output sensor.

Diagnostic Aids:

The PCM/TCM relies on the PSM to indicate what gear range has been selected, so the PSM must be functioning properly or Code 85 may be set.

Check all connections especially those at the transmission pass-thru connector. See SYMPTOMS (SECTION 7A2).

Compare "scan" tool gear ratio reading to chart below.

Gear Ratio Chart

	less than	more than
1st	2.38	2.63
2nd	1.43	1.58
3rd	.95	1.05
rev	1.97	2.17

CODE 85
UNDEFINED RATIO

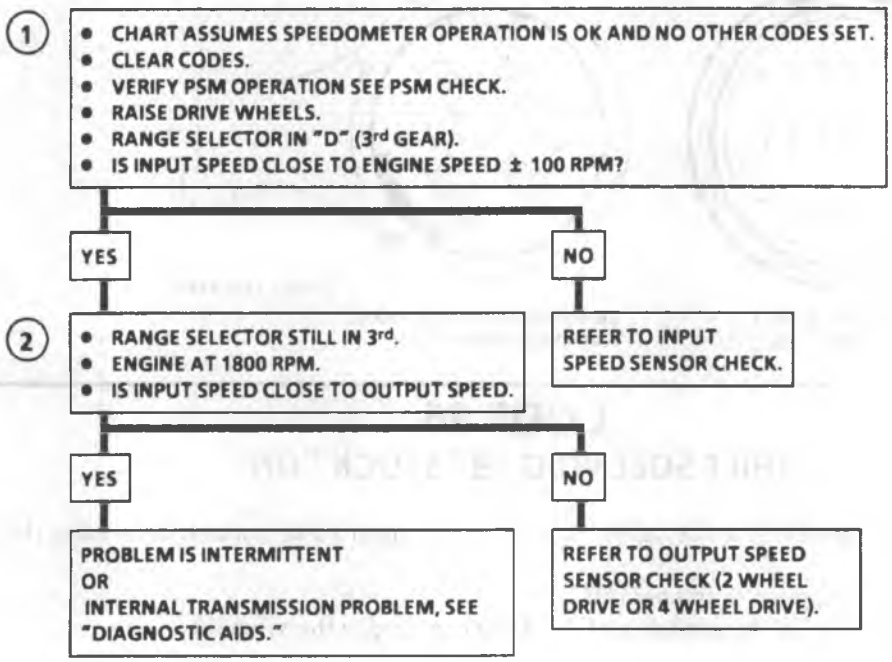

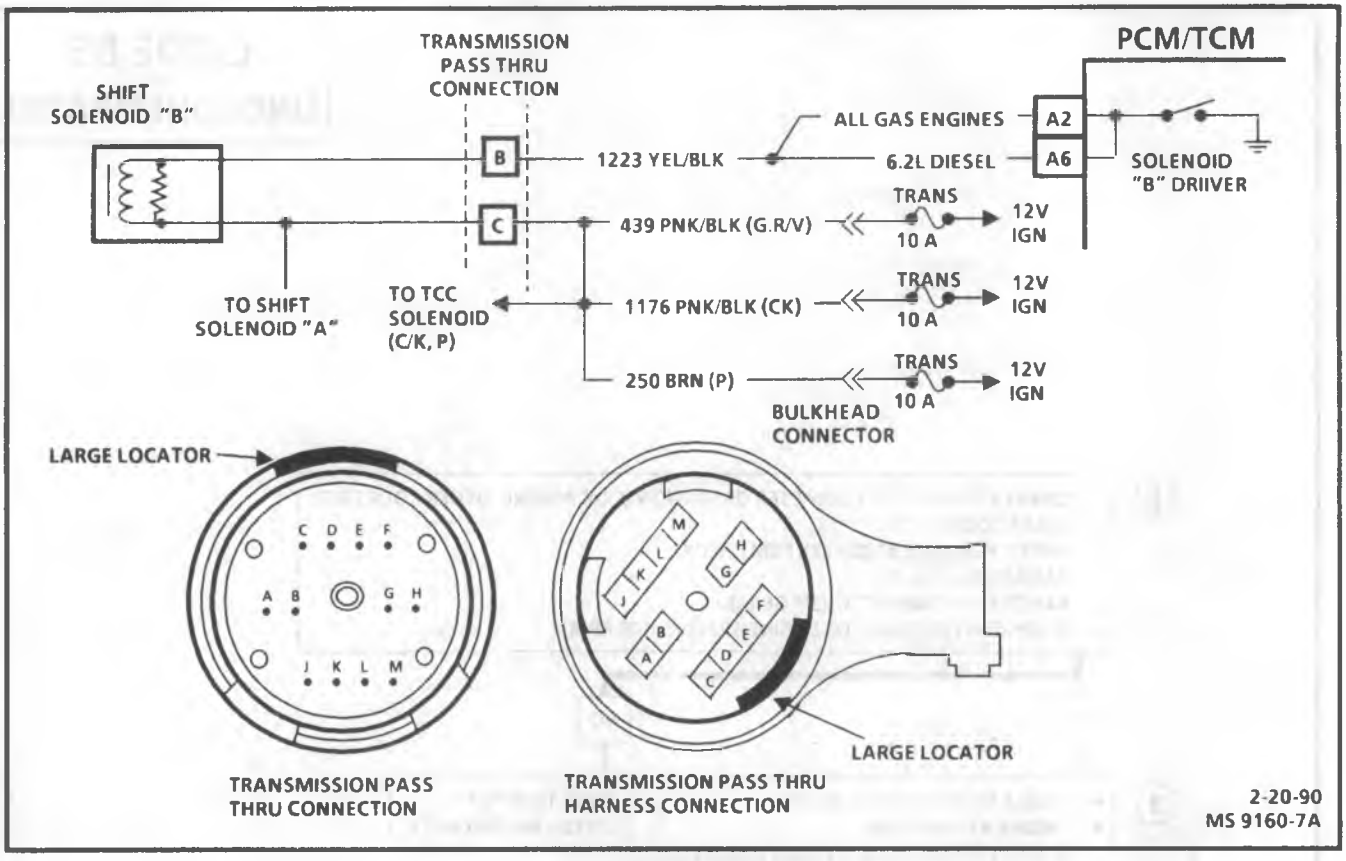

CODE 86

SHIFT SOLENOID "B" STUCK "ON"

Circuit Description:

The shift solenoids are used inside the valve body to control spool valves, which determine the transmission gear.

Fused ignition power is supplied to solenoid "B".

The PCM/TCM will engage "B" by grounding CKT 1223 to energize the solenoid.

Code 86 will set when:

- Vehicle speed is above 7 mph.
- TPS is more than 25%.
- PCM/TCM commands 1st or 2nd gear.
- Trans ratio indicates trans is in 3rd or 4th gear.
- Conditions met for 6 seconds.

Test Description: Number(s) below refer to circled number(s) on the diagnostic chart.

1. This test determines if transmission is receiving a Solenoid "B" "ON" command.

Diagnostic Aids:

- Always follow PRELIMINARY CHECK PROCEDURE (SECTION 7A1).
- See SYMPTOMS (SECTION 7A2) for further information on internal transmission problems.

CODE 86

SHIFT SOLENOID "B" STUCK "ON"

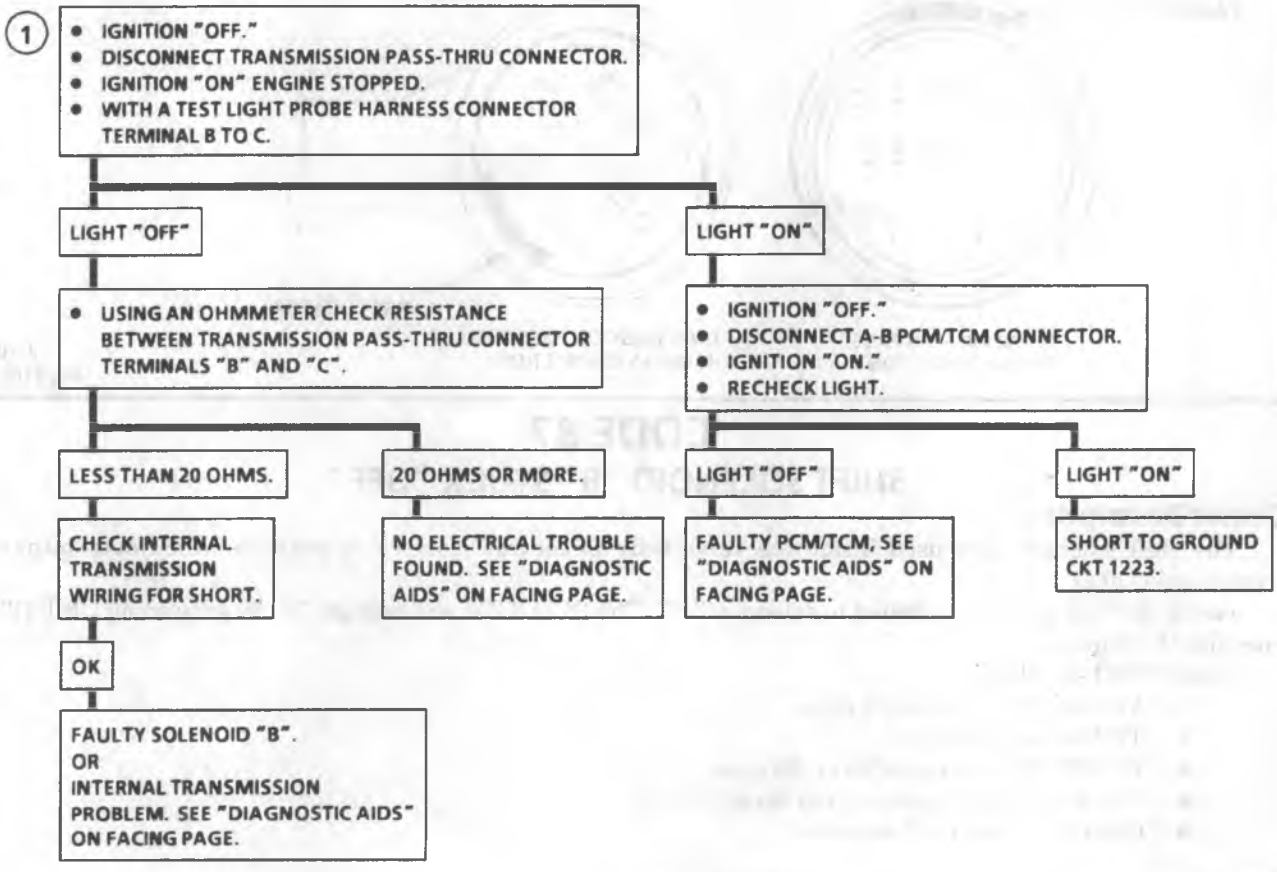

5-4-90
MS 8859-6E

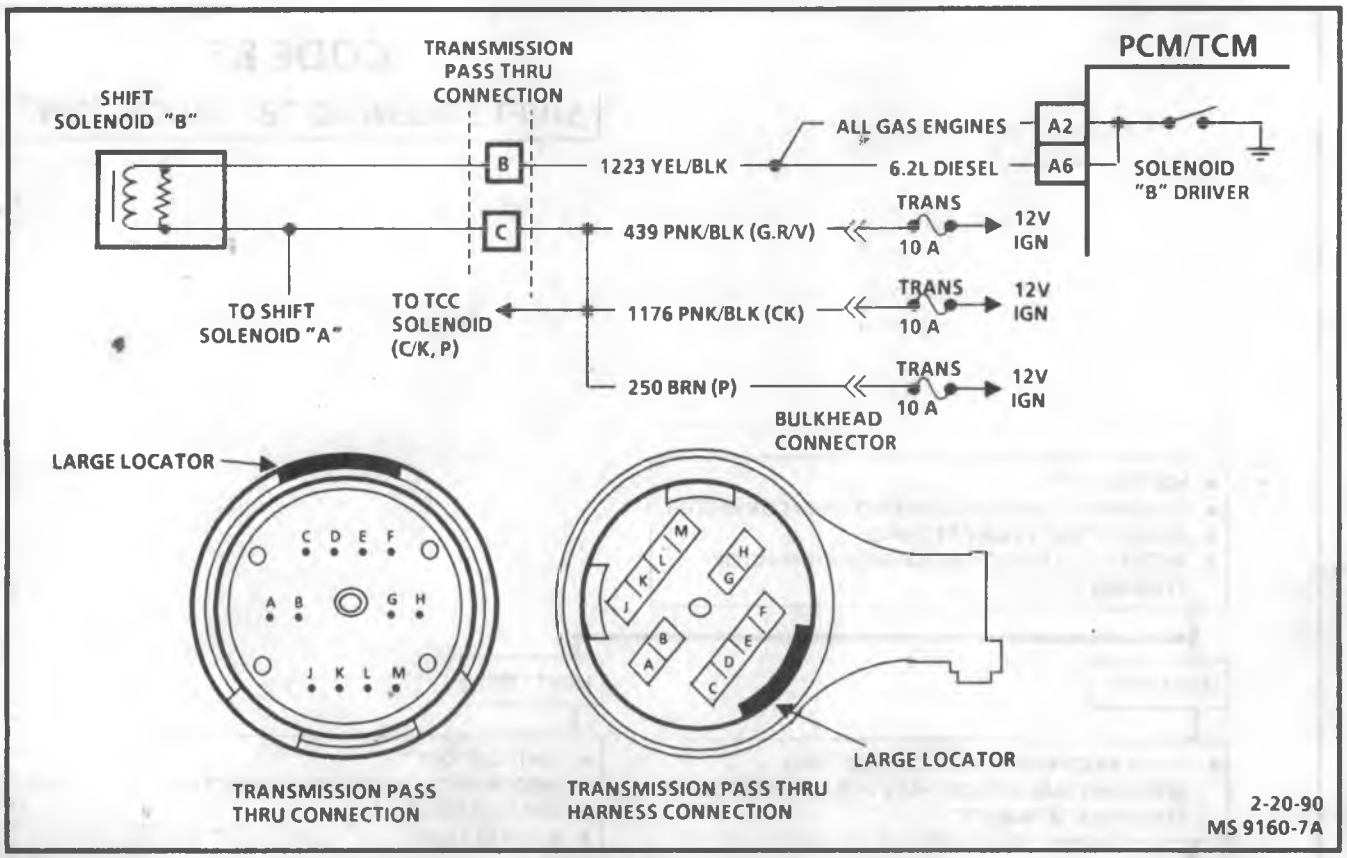

CODE 87

SHIFT SOLENOID "B" STUCK "OFF"

Circuit Description:

The shift solenoids are used inside the valve body to control spool valve position which determines the transmission gear.

Fused ignition power is supplied to solenoid "B." The PCM/TCM will engage "B" by grounding CKT 1223 to energize the solenoid.

Code 87 will set when:

- Vehicle speed is above 7 mph.
- TPS is more than 25%.
- PCM/TCM commands 3rd or 4th gear.
- Box ratio indicates trans is in 1st or 2nd gear.
- Conditions met for 6 seconds.

Test Description:

Number(s) below refer to circled number(s) on the diagnostic chart.

1. Test one checks the PCM/TCM's ability to ground or control solenoid "B".
2. Test two checks the power supply and CKT 1223.
3. Test three checks the internal transmission harness and solenoid "B".

Diagnostic Aids:

Check all connections, especially those at the transmission pass-thru connector. See Symptom chart in Section "7A2" for further information on internal transmission problems.

CODE 87

SHIFT SOLENOID "B" STUCK "OFF"

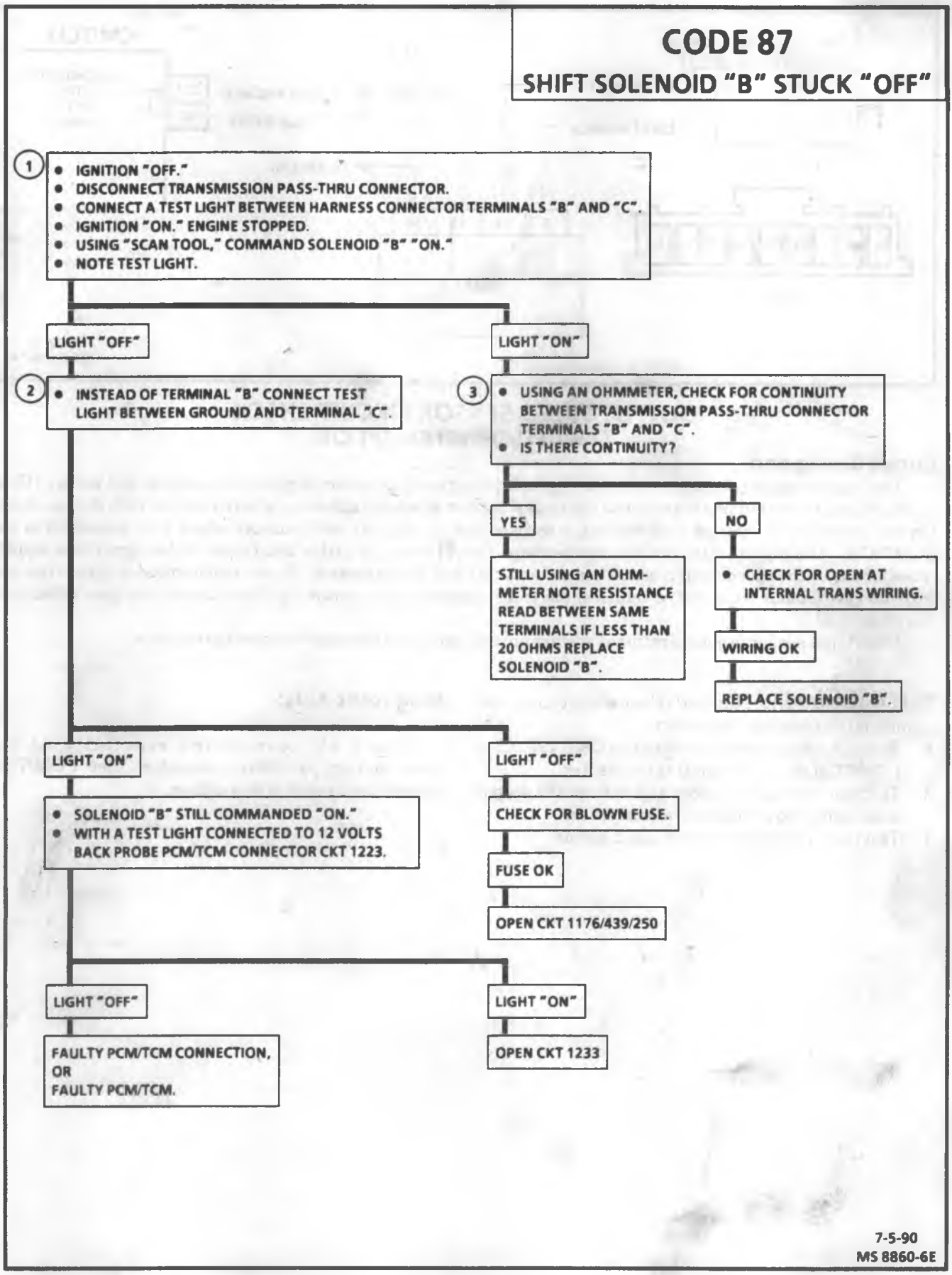

7-5-90
MS 8860-6E

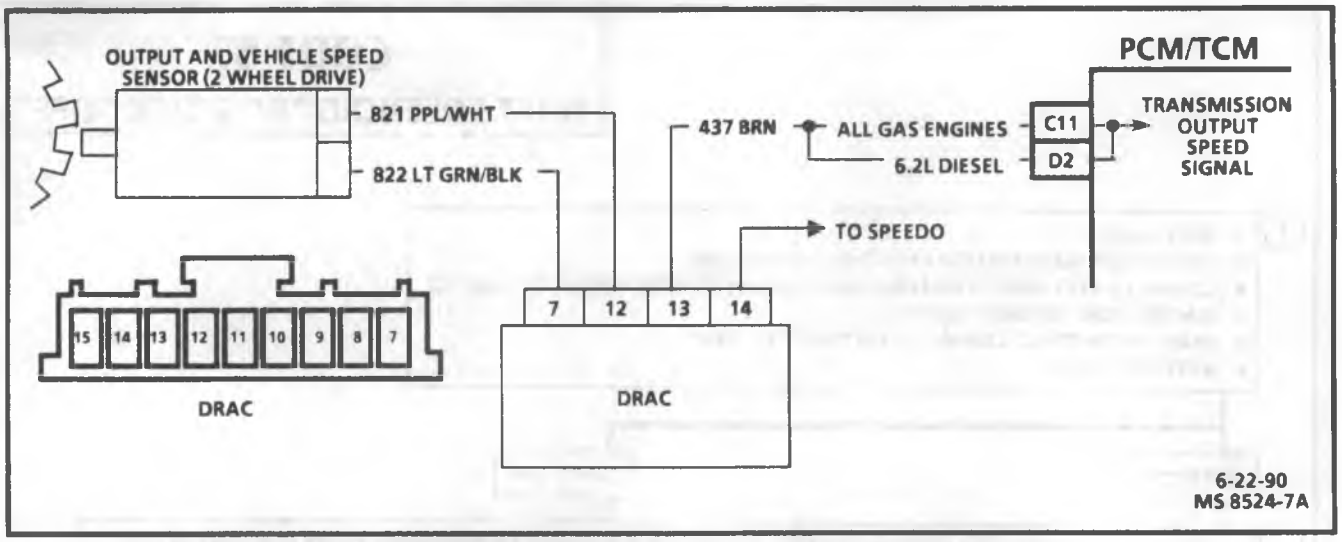

OUTPUT SPEED SENSOR CIRCUIT CHECK
(2 WHEEL DRIVE) EXCEPT C/K

Circuit Description:

The output sensor circuit consists of a magnetic induction type sensor, digital ratio adapter and wiring. Gear teeth pressed on the outside diameter of the output carrier assembly induce an alternating current in the sensor. On two wheel drive vehicles, this current is transmitted to a digital ratio adapter where it is passed on to the PCM/TCM. The digital ratio adapter compensates for various axle ratios and converts the signal to a square wave for use by the speedometer, cruise control and anti-lock brake system. Since vehicle speed is taken from the transfer case on four wheel drive vehicles, the transmission output sensor signal on these units goes directly to the PCM/TCM.

If the Input sensor is not operational at start up, this can cause the output sensor to read zero.

Test Description:

Number(s) below refer to circled number(s) on the diagnostic chart.

1. Test one checks the speed signal on CKT 437 at the PCM/TCM from the digital ratio adapter.
2. Test two checks for a speed signal from the output speed sensor to the digital ratio adapter.
3. Test three checks the output speed sensor.

Diagnostic Aids:

Check all connections especially at the transmission pass-thru connector. See PCM/TCM intermittent codes in this section.

OUTPUT SPEED SENSOR CIRCUIT CHECK (2 WHEEL DRIVE) EXCEPT C/K

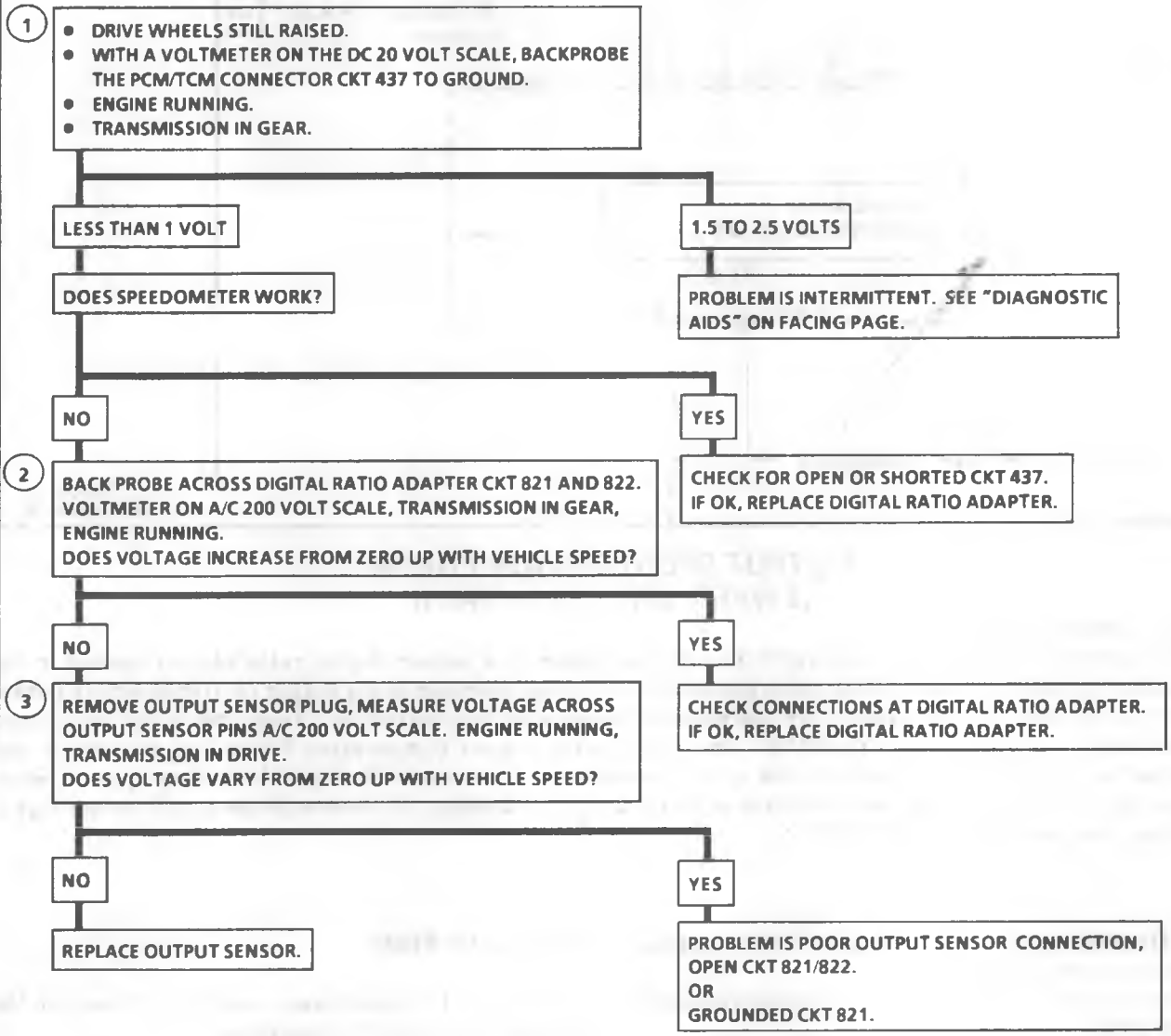

7-5-90
MS 8855-6E

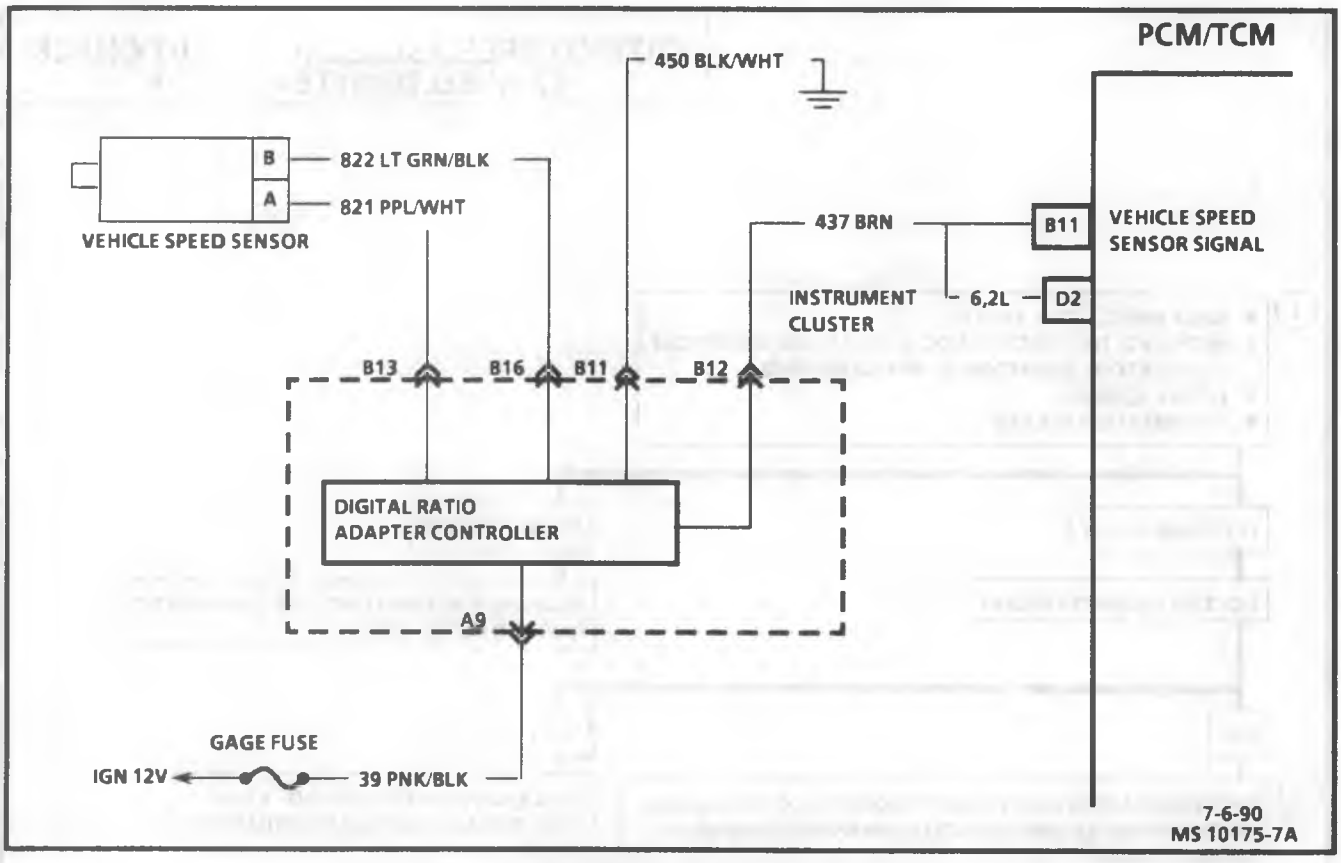

OUTPUT SPEED SENSOR CHECK
(2 WHEEL DRIVE C/K MODELS)

Circuit Description:

The output sensor circuit consists of a magnetic induction type sensor, digital ratio adapter located in the instrument cluster and wiring. Gear teeth pressed on the outside diameter of the output carrier assembly induce an alternating current in the sensor. On two wheel drive vehicles, this current is transmitted to the instrument cluster where it is passed on to the PCM. The digital ratio adapter compensates for various axle ratios and converts the signal to a square wave for use by the speedometer, cruise control and anti-lock brake system. Since vehicle speed is taken from the transfer case on four wheel drive vehicles, the transmission output sensor signal on these units goes directly to the PCM.

Test Description: Number(s) below refer to circled number(s) on the diagnostic chart.

1. Test one verifies an output speed sensor voltage at the PCM.
2. Test two directly verifies the operation of the output speed sensor.
3. Test three checks CKT 821 and CKT 822 up to the instrument cluster.

Diagnostic Aids:

Check all connections, especially those at the transmission pass-thru connector.

If the input sensor is not functioning at start up, it will cause the output sensor to read zero.

While code 24 is set the "scan" tool will display an rpm derived from input speed.

OUTPUT SPEED SENSOR CHECK
(2 WHEEL DRIVE C/K MODELS)

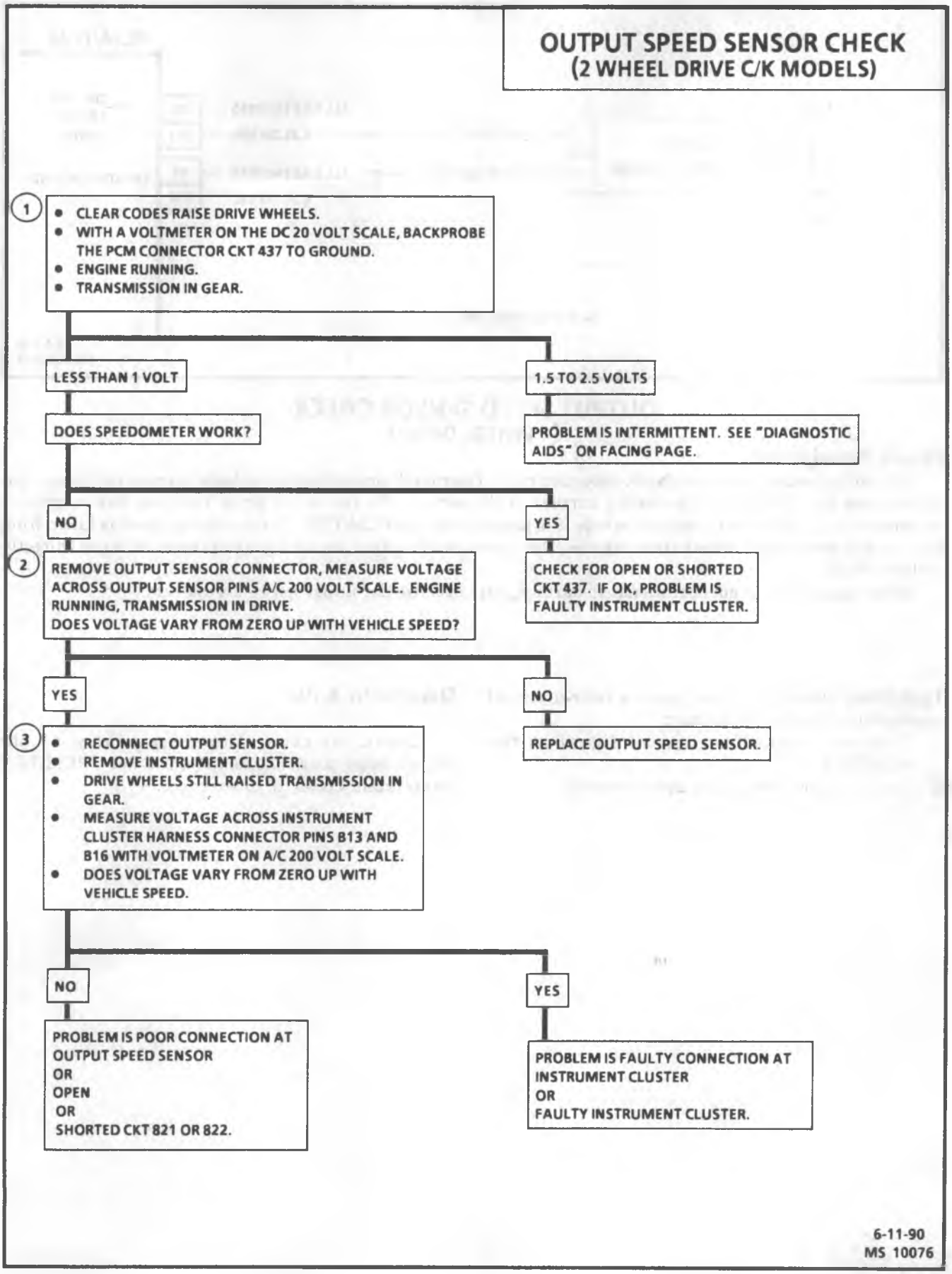

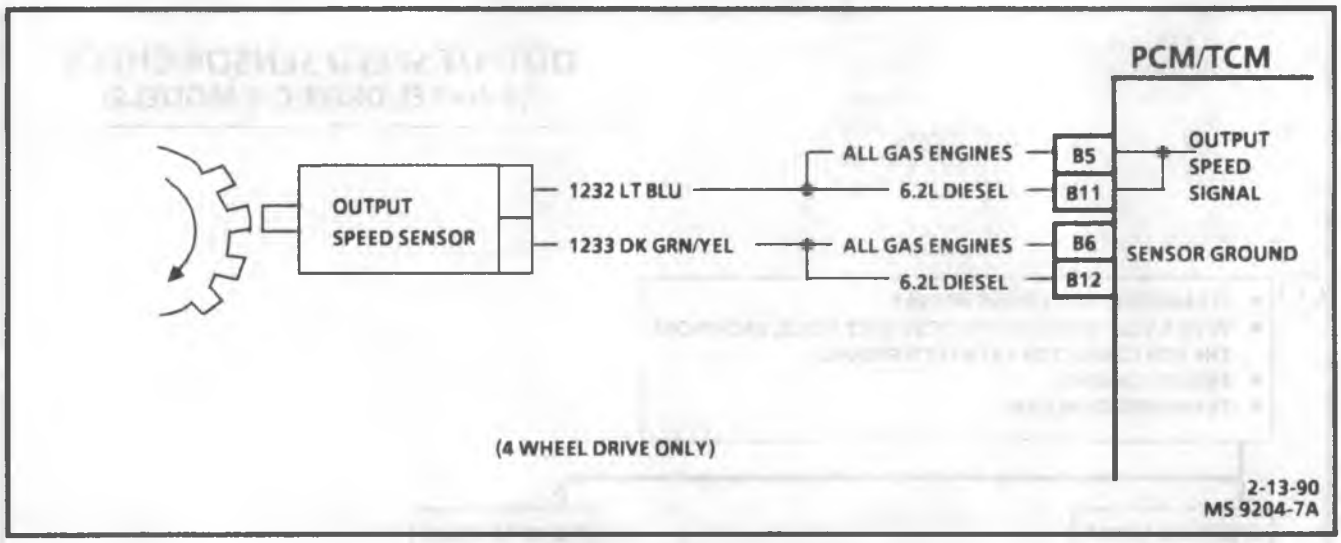

OUTPUT SPEED SENSOR CHECK
(4 WHEEL DRIVE)

Circuit Description:

The output sensor is the magnetic induction type. Gear teeth pressed on the outside diameter of the output carrier assembly induce an alternating current in the sensor. On two wheel drive vehicles, this current is transmitted to a digital ratio adapter where it is passed on to the PCM/TCM. Since vehicle speed is taken from the transfer case on four wheel drive vehicles, the transmission output sensor signal on these units goes directly to the PCM/TCM.

If the input sensor is not operational at start up, this can cause the output sensor to read zero.

Test Description:

Number(s) below refer to circled number(s) on the diagnostic chart.

1. Test one checks for a speed signal at the PCM/TCM.
2. Test two checks the output sensor directly.

Diagnostic Aids:

Check all connections especially at the transmission pass-thru connector. See "PCM/TCM Intermittent Codes" in this section.

OUTPUT SPEED SENSOR CHECK
(4 WHEEL DRIVE)

1
- BACK PROBE ACROSS CKT 1233 AND 1232 AT PCM/TCM CONNECTOR.
- VEHICLE WHEELS RAISED, ENGINE RUNNING IN GEAR.
- VOLTMETER ON A/C 200 VOLT SCALE.
- DOES VOLTAGE VARY FROM 0 UP WITH RPM INCREASE?

YES → PROBLEM IS INTERMITTENT OR MECHANICAL. SEE "DIAGNOSTIC AIDS."

NO →

2
- WITH VEHICLE STILL RAISED, DISCONNECT OUTPUT SENSOR CONNECTOR.
- ENGINE RUNNING.
- TRANSMISSION IN GEAR.
- VOLTMETER ON A/C 200 VOLT SCALE.
- MEASURE VOLTAGE ACROSS OUTPUT SENSOR . DOES VOLTAGE FLUCTUATE WITH RPM?

YES →
PROBLEM IS:
- POOR CONNECTION AT PCM/TCM.
- POOR CONNECTION AT OUTPUT SENSOR.
- OPEN CKT 1233/CKT 1234.
- SHORTED CKT 1233.

NO → REPLACE OUTPUT SENSOR.

7-5-90
MS 8856-6E

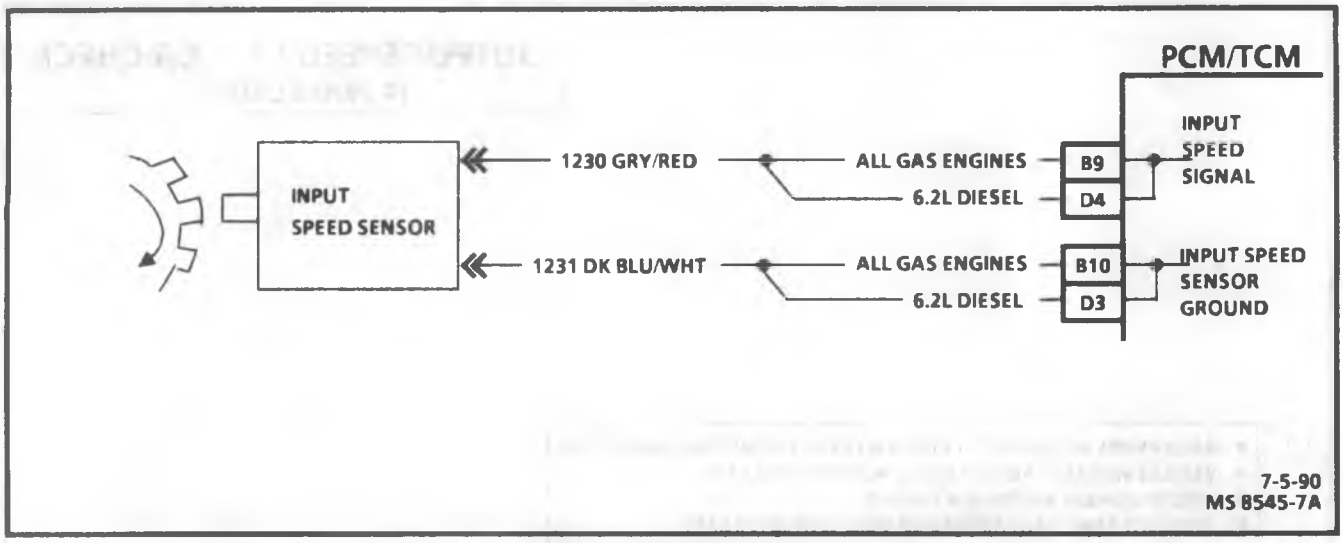

INPUT SPEED SENSOR CIRCUIT CHECK

Circuit Description:

The input sensor is of the magnetic induction type and is located on the left side of the transmission just forward of center. Serrations cut in the forward clutch housing induce a small A/C current as they pass by the input sensor. While there is no specific code for an input sensor problem, the PCM/TCM uses input sensor readings to calculate gear ratio, turbine speed, TCC slip and to determine if the engine is running.

Test Description:

Number(s) below refer to circled number(s) on the diagnostic chart.

1. This tests the input sensor circuit up to the PCM/TCM.
2. The second test checks the sensor output.

Diagnostic Aids:

Check all connectors and see "PCM/TCM Intermittent Codes and Performance" in this section.

INPUT SPEED SENSOR CIRCUIT CHECK

1
- BACK PROBE ACROSS CKT 1230 AND 1231 AT PCM/TCM CONNECTOR
- VEHICLE WHEELS RAISED.
- ENGINE RUNNING TRANSMISSION IN GEAR.
- VOLT METER ON A/C 200 VOLT SCALE.
- DOES VOLTAGE VARY FROM 0 UP WITH RPM INCREASE?

NO

2
- VEHICLE STILL RAISED.
- DISCONNECT INPUT SENSOR.
- ENGINE RUNNING TRANSMISSION IN GEAR.
- VOLTMETER ON 200 VOLT A/C SCALE.
- WITH JUMPER WIRE AND VOLTMETER, MEASURE VOLTAGE ACROSS SENSOR TERMINALS. DOES VOLTAGE FLUCTUATE WITH RPM?

YES

PROBLEM IS POOR CONNECTION AT PCM/TCM, POOR CONNECTION AT INPUT SENSOR, OPEN CKT 1230/1231
OR
SHORTED CKT 1230.

NO

REPLACE INPUT SENSOR.

YES

PROBLEM IS INTERMITTENT OR INTERNAL TRANSMISSION.
SEE "DIAGNOSTIC AIDS" ON FACING PAGE

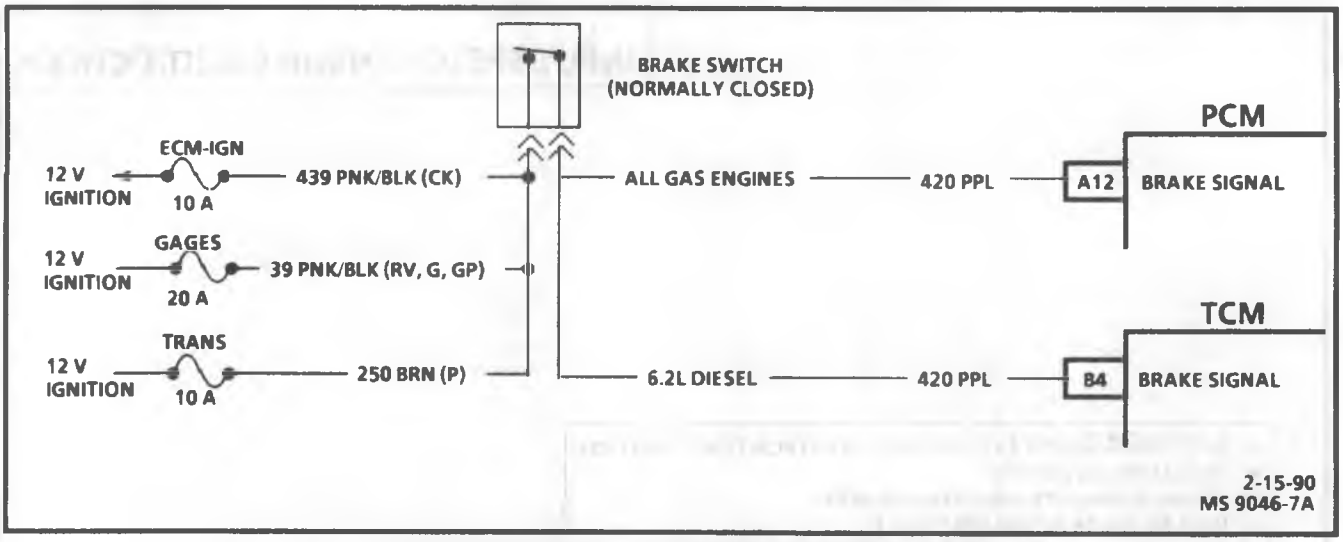

BRAKE SIGNAL CIRCUIT CHECK
ALL ENGINES

Circuit Description:

The normally closed brake switch supplies a 12 volt signal on CKT 420 to the PCM/TCM. The signal voltage is removed when the brakes are applied. An incorrect brake signal may affect TCC operation.

Test Description:

Number(s) below refer to circled number(s) on the diagnostic chart.

1. Checks for voltage at brake switch.
2. This test simulates brake switch closed or brakes "OFF."
3. Checks CKT 420 from brake switch to PCM/TCM.
4. This opens CKT 420 and simulates brakes being applied.

Diagnostic Aids:

- Refer to "PCM/TCM Intermittent Codes and Performance" in this section.
- Check customer driving habits and/or unusual traffic conditions (i. e. stop and go expressway traffic).

BRAKE SIGNAL CIRCUIT CHECK ALL ENGINES

- INSTALL "SCAN" TOOL.
- IGNITION SWITCH "ON," ENGINE STOPPED.
- APPLY BRAKES.
- DOES "SCAN" DISPLAY BRAKES "ON," AND THEN DISPLAY "OFF" WHEN RELEASED?

NO

YES

NO TROUBLE FOUND. REFER TO "DIAGNOSTIC AIDS" ON FACING PAGE.

ALWAYS DISPLAYS "ON"

(1)
- IGNITION STILL "ON."
- DISCONNECT BRAKE SWITCH.
- WITH A TEST LIGHT CONNECTED TO GROUND, PROBE HARNESS CKT 39/439.

LIGHT "ON"

(2)
- JUMPER BETWEEN HARNESS CKT 39/439 AND CKT 420. "SCAN" SHOULD INDICATE BRAKES "OFF." DOES IT?

NO

(3)
- JUMPER STILL INSTALLED.
- WITH A TEST LIGHT CONNECTED TO GROUND, BACKPROBE PCM/TCM CKT 420.

LIGHT "ON"

FAULTY PCM/TCM CONNECTION CKT 420 OR FAULTY PCM/TCM.

LIGHT "OFF"

OPEN CKT 420.

YES

BRAKE SWITCH OUT OF ADJUSTMENT OR FAULTY BRAKE SWITCH.

LIGHT "OFF"

REPAIR OPEN CKT 39/439.

ALWAYS DISPLAYS "OFF"

(4)
- IGNITION STILL "ON."
- DISCONNECT BRAKE SWITCH. "SCAN" TOOL SHOULD INDICATE BRAKES "ON." DOES IT?

NO

- WITH TEST LIGHT CONNECTED TO GROUND PROBE HARNESS CKT 420.

LIGHT "ON"

CHECK FOR 12 VOLTS SHORTED TO CKT 420.

CKT 420 OK.

FAULTY PCM/TCM.

LIGHT "OFF"

FAULTY PCM/TCM.

YES

BRAKE SWITCH OUT OF ADJUSTMENT OR FAULTY BRAKE

7-7-90
MS 8835-6E

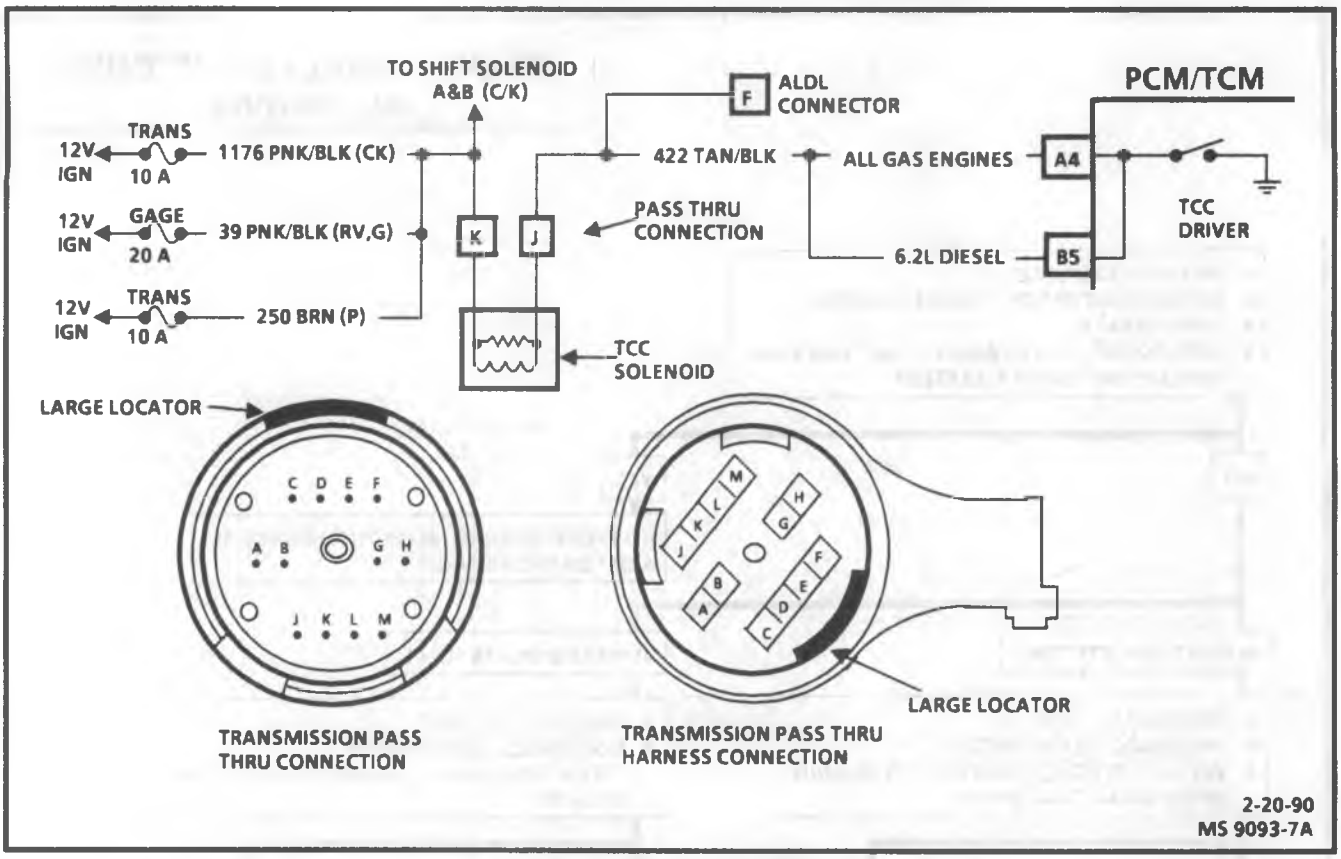

TCC CIRCUIT CHECK

Circuit Description:

The purpose of the automatic transmission Torque Converter Clutch (TCC) feature is to eliminate the power loss of the torque converter stage when the vehicle is in a cruise condition. This allows the convenience of the automatic transmission and the fuel economy of a manual transmission.

Fused battery ignition is supplied to the TCC solenoid which is used inside the valve body to shift a spool valve to modulate pressure to the torque converter clutch.

The PCM/TCM will engage TCC by grounding CKT 422 to energize the solenoid.

TCC will engage when:

- Vehicle speed is above 30 mph (48 km/h).
- Engine at normal operating temperature (above 65°C) (149°F).
- Transmission at normal operating temperature 95°C (195°F).
- Throttle position sensor output not changing, indicating a steady road speed.
- Brake switch closed
- 4th gear
- No codes stored

Test Description:

Number(s) below refer to circled number(s) on the diagnostic chart.

1. The first portion of the test checks for a shorted, internal transmission harness or TCC solenoid.
2. The second part of the test verifies power supply to the TCC solenoid.
3. This step checks CKT 422 for a short to ground.
4. The final step checks the PCM/TCM ability to control the TCC solenoid.

Diagnostic Aids:

Be sure to check all connections especially those at the transmission pass-thru connector.

If they are OK, see PCM/TCM intermittent codes and performance in this section or "Symptom Diagnosis" in "Section 7A2".

The TCC solenoid is pulse width modulated and designed to keep the TCC right at the point of engagement. Therefore some slight slip is normal.

TCC CIRCUIT CHECK

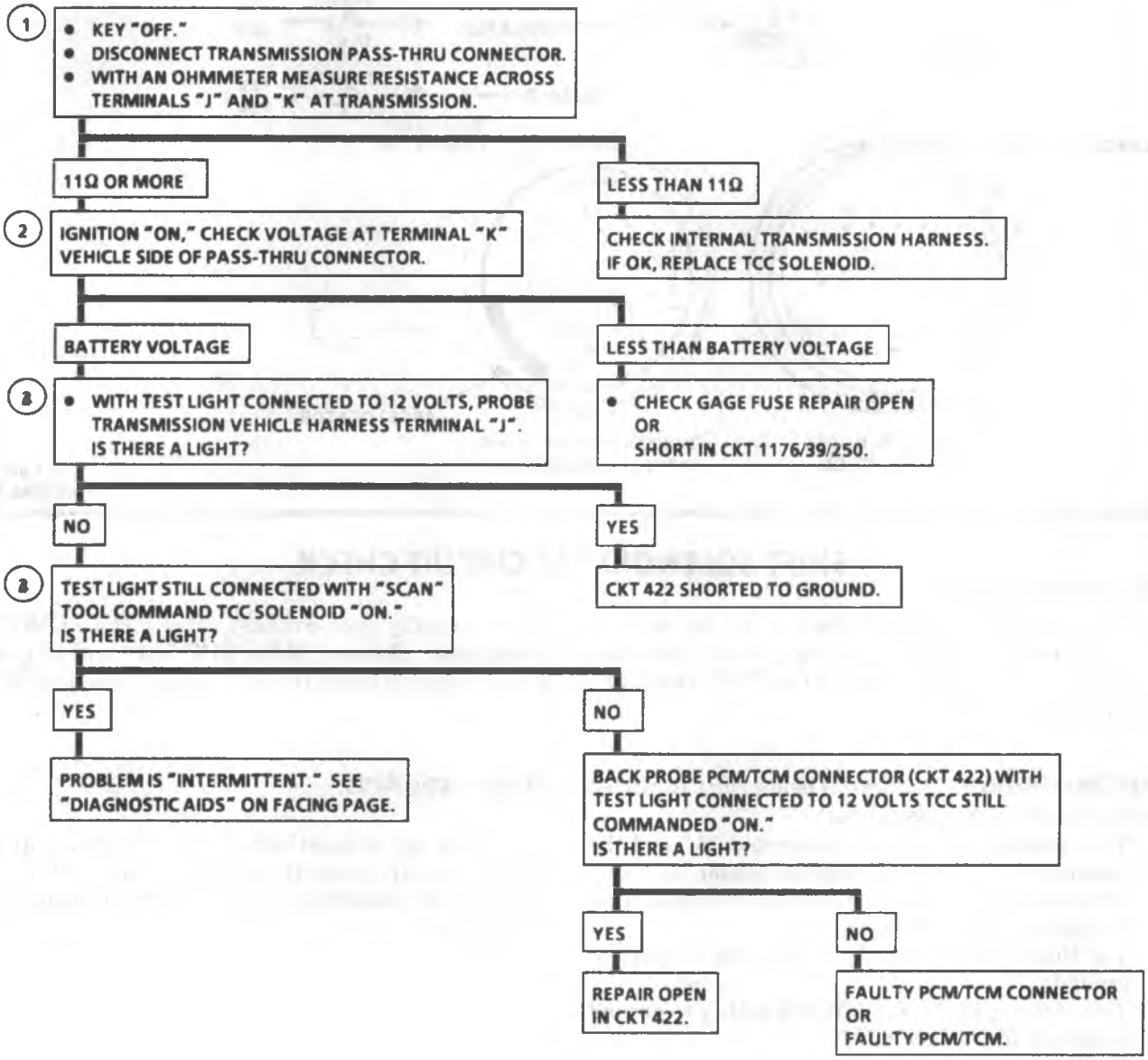

7-12-90
MS 8858-6E

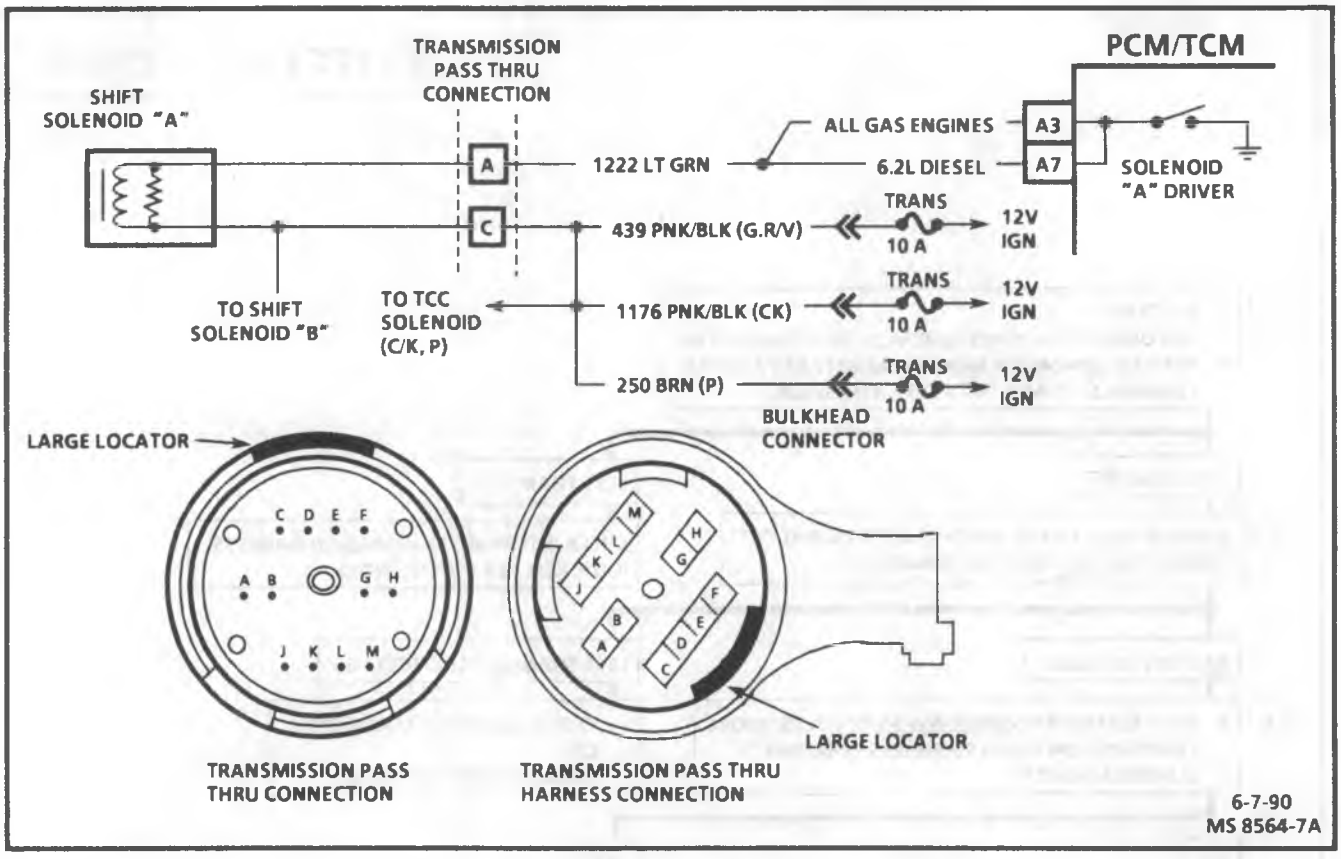

SHIFT SOLENOID "A" CIRCUIT CHECK

Circuit Description:

Shift solenoid "A" is attached to the valve body and is a normally open exhaust valve. The PCM/TCM activates the solenoid by grounding it through an internal quad driver. Solenoid "A" is "ON" in 1st and 4th gears, but "OFF" in 2nd and 3rd gears. When "ON," the solenoid redirects fluid to act on the shift valves. Solenoid "A" is usually blue in color.

Test Description:

Number(s) below refer to circled number(s) on the diagnostic chart.

1. This procedure checks shift solenoid "A" and the internal transmission wiring harness for shorts.
2. This check is for power to the shift solenoid from the ignition through the fuse.
3. The third test checks CKT 1222 for a short to ground.
4. This test checks the PCM/TCM's ability to ground or control shift solenoid "A".

Diagnostic Aids:

Check all connections especially those at the transmission pass-thru connector. Refer to "PCM/TCM Intermittent Codes and Performance," in this section.

SHIFT SOLENOID "A" CIRCUIT CHECK

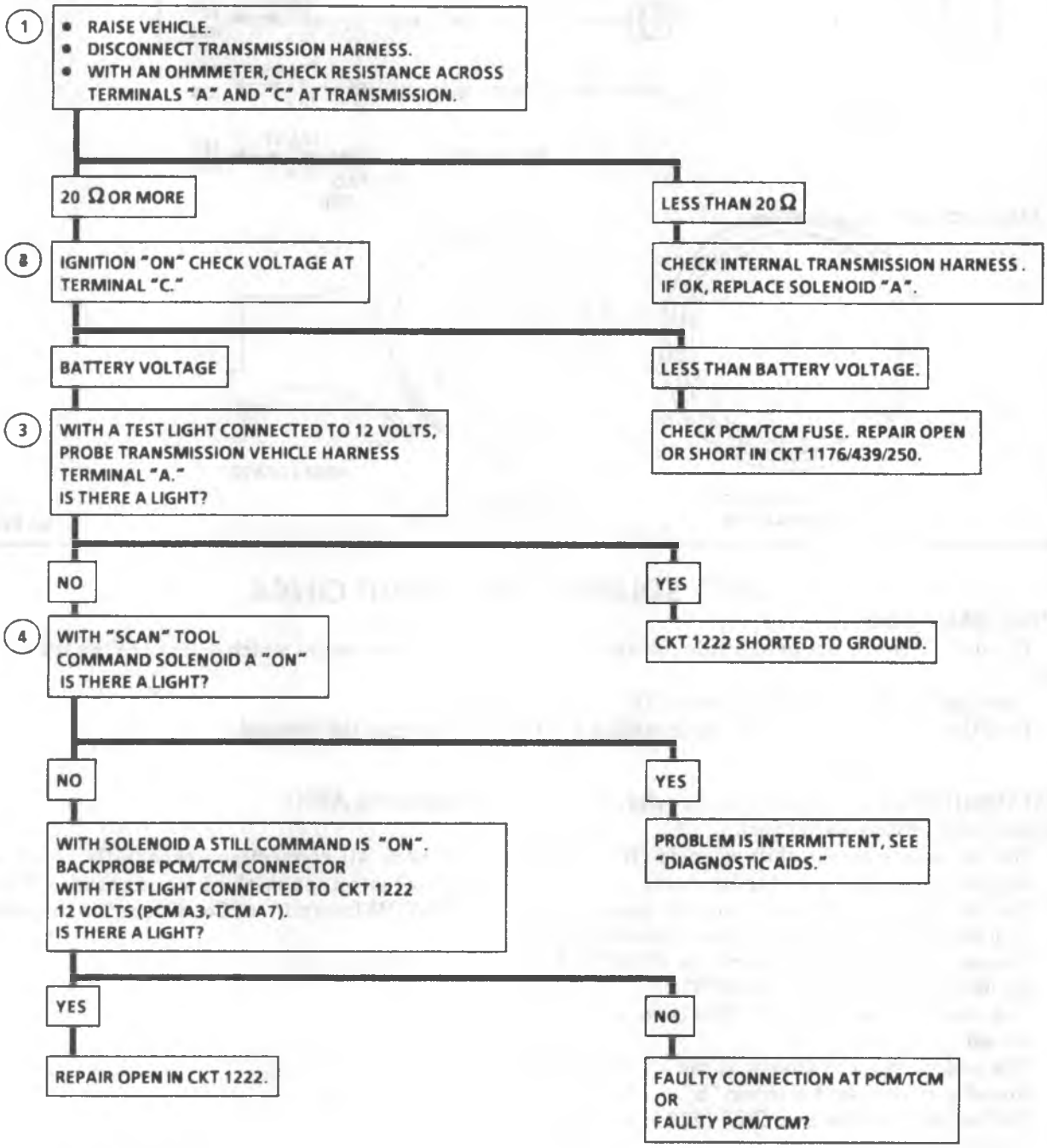

7-5-90
MS 8852-7A

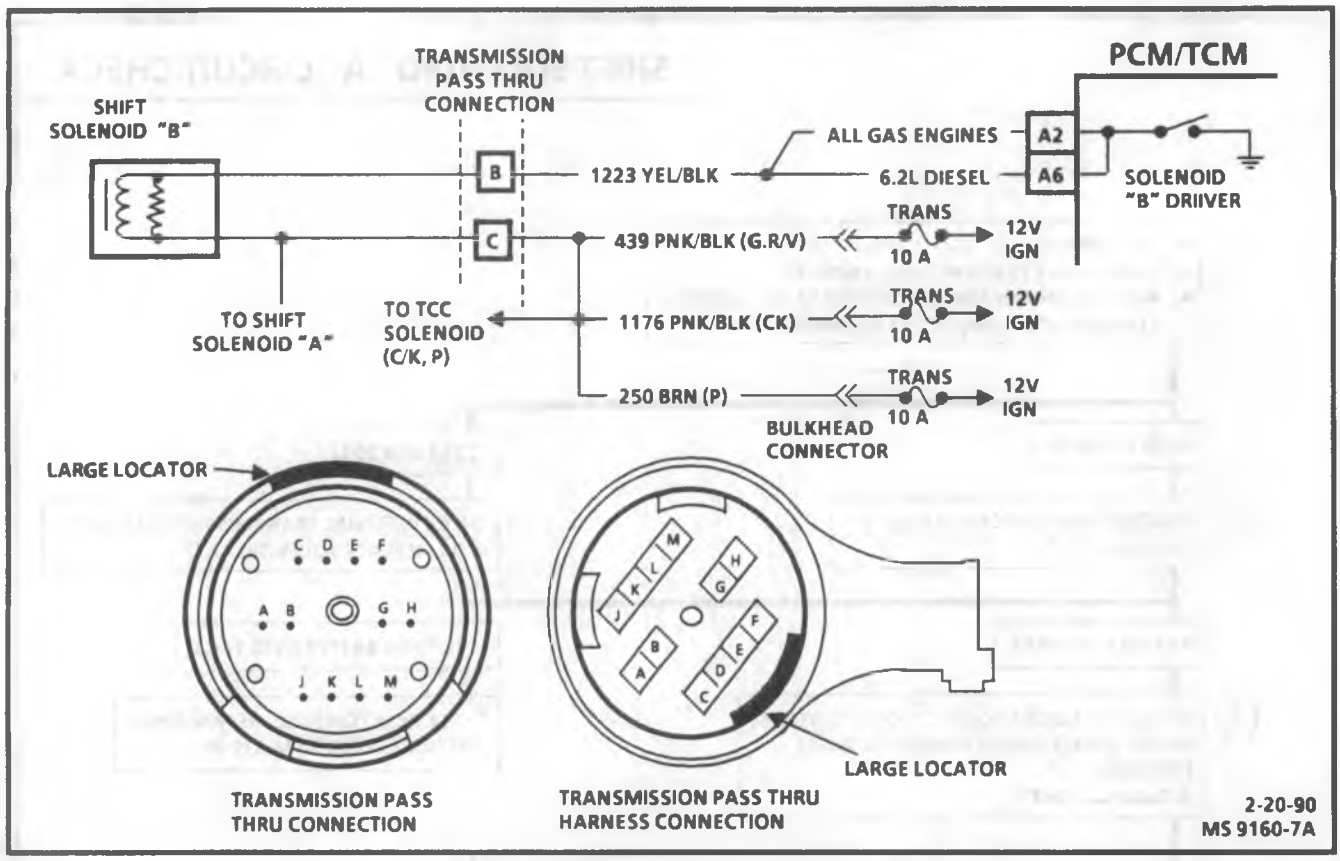

SHIFT SOLENOID "B" CIRCUIT CHECK

Circuit Description:

The shift solenoids are used inside the valve body to control spool valves which determine the transmission gear.

Fused ignition is supplied to solenoid "B".

The PCM/TCM will engage "B" by grounding CKT 1223 to energize the solenoid.

Test Description:

Number(s) below refer to circled number(s) on the diagnostic chart.

1. This procedure checks shift solenoid "B" and the internal transmission wiring for shorts.
2. This block checks for power to shift solenoid "B" from the ignition through the transmission fuse.
3. This test checks the ability of the PCM/TCM to ground or control shift solenoid "B".
3. Test three verifies that CKT 1223 is not shorted to ground.
4. This test checks the ability of the PCM/TCM to ground or control shift solenoid "B".
5. The final test verifies that CKT 1223 is not shorted to ground.

Diagnostic Aids:

Check all connections especially those at the transmission pass-thru connector. Refer to "PCM/TCM Intermittent Conditions," in this section.

SHIFT SOLENOID "B" CIRCUIT CHECK

1. • IGNITION "OFF."
   • DISCONNECT TRANSMISSION HARNESS.
   • WITH AN OHMMETER CHECK RESISTANCE ACROSS TERMINALS "B" AND "C" AT TRANSMISSION.

- 20 Ω OR MORE
- LESS THAN 20 Ω → CHECK INTERNAL TRANSMISSION HARNESS. IF OK REPLACE SOLENOID "B".

2. • IGNITION "ON."
   • CHECK VOLTAGE AT TERMINAL "C" OF VEHICLE HARNESS.

- BATTERY VOLTAGE
- LESS THAN BATTERY VOLTAGE → CHECK FOR BLOWN FUSE
  - FUSE OK → REPAIR SHORT TO GROUND OR OPEN CKT 1176/439/250

3. WITH A TEST LIGHT CONNECTED TO 12 VOLTS, PROBE TRANSMISSION VEHICLE HARNESS TERMINAL "B". IS THERE A LIGHT?

- NO
- YES → CKT 1223 SHORTED TO GROUND.

4. • TEST LIGHT STILL CONNECTED.
   • USING "SCAN" TOOL, COMMAND SOLENOID "B" "ON."

- LIGHT "OFF"
- LIGHT "ON" → NO PROBLEM FOUND. SEE "DIAGNOSTIC AIDS" ON FACING PAGE.

5. • COMMAND SOLENOID "B" "ON."
   • WITH TEST LIGHT CONNECTED TO 12 VOLTS, BACKPROBE PCM/TCM CKT 1223.

- LIGHT "OFF" → FAULTY PCM/TCM CONNECTOR OR PCM/TCM SEE "DIAGNOSTIC AIDS" ON FACING PAGE.
- LIGHT "ON" → REPAIR OPEN IN CKT 1223

7-5-90
MS 9247-7A

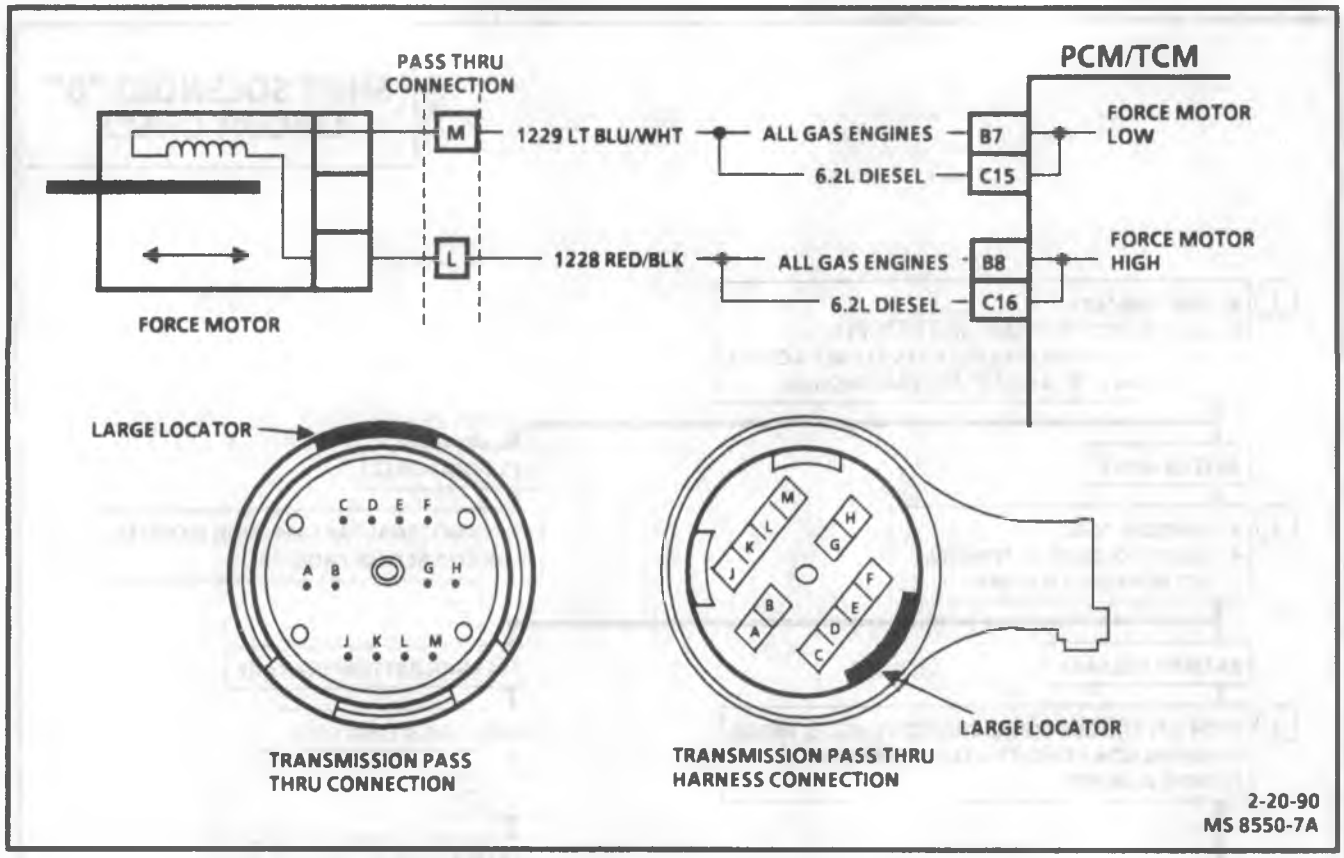

FORCE MOTOR CIRCUIT CHECK

Circuit Description:

The force motor is a PCM/TCM controlled device used to regulate transmission line pressure. The PCM/TCM looks at TPS voltage, engine rpm, and other inputs to determine the line pressure appropriate for a given load, then regulates the pressure by applying a variable amperage to the force motor. The applied amperage varies from .1 to 1.1 amps.

Test Description: Number(s) below refer to circled number(s) on the diagnostic chart.

1. This procedure verifies an amperage difference of .16 amp or more and tests the PCM/TCM's ability to control amperage to the force motor.
2. This part of the test checks the force motor for internal shorts and integrity.

Diagnostic Aids:

Check for poor connections at PCM/TCM and especially at transmission pass-thru connector.

FORCE MOTOR CIRCUIT CHECK

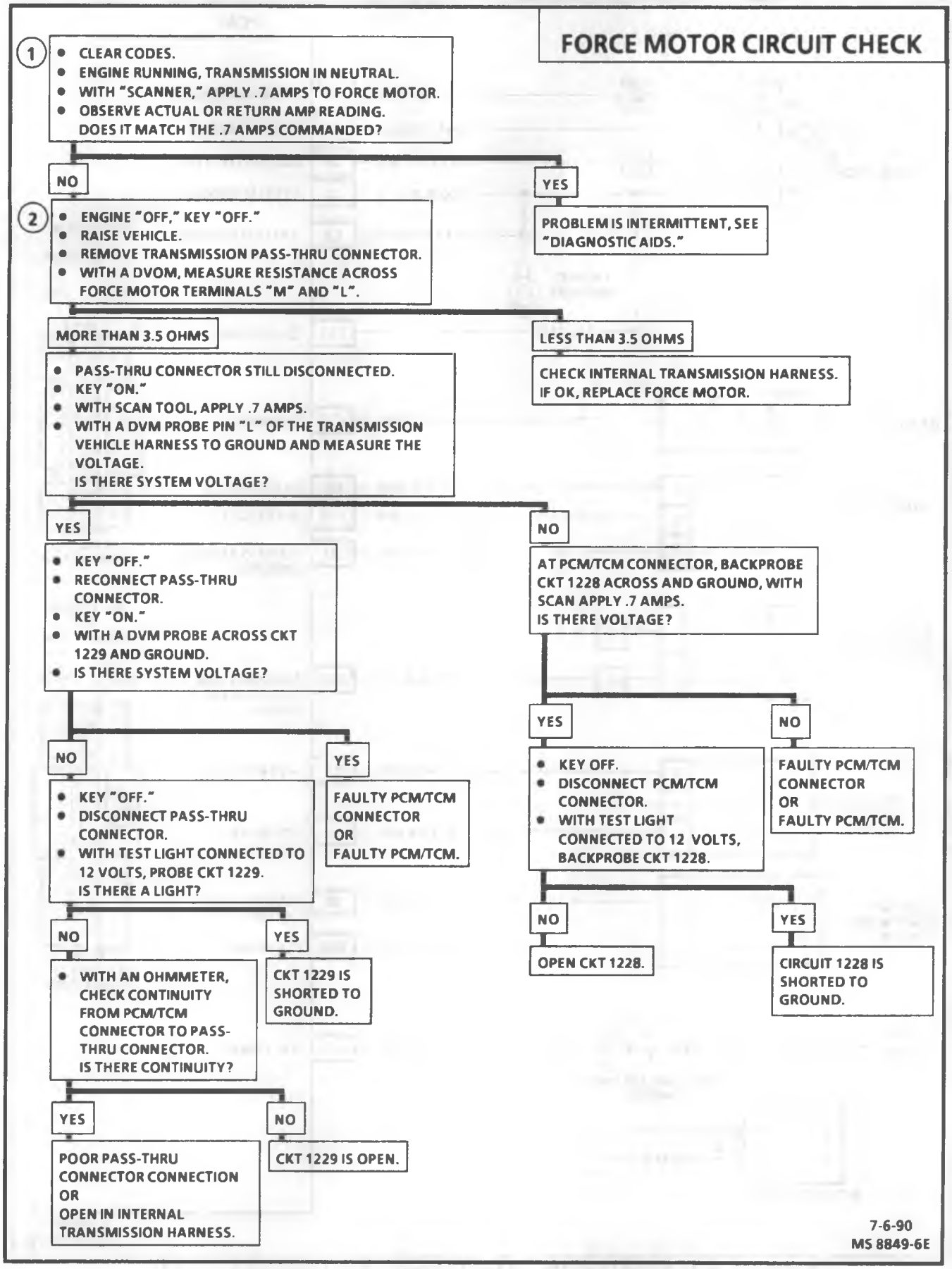

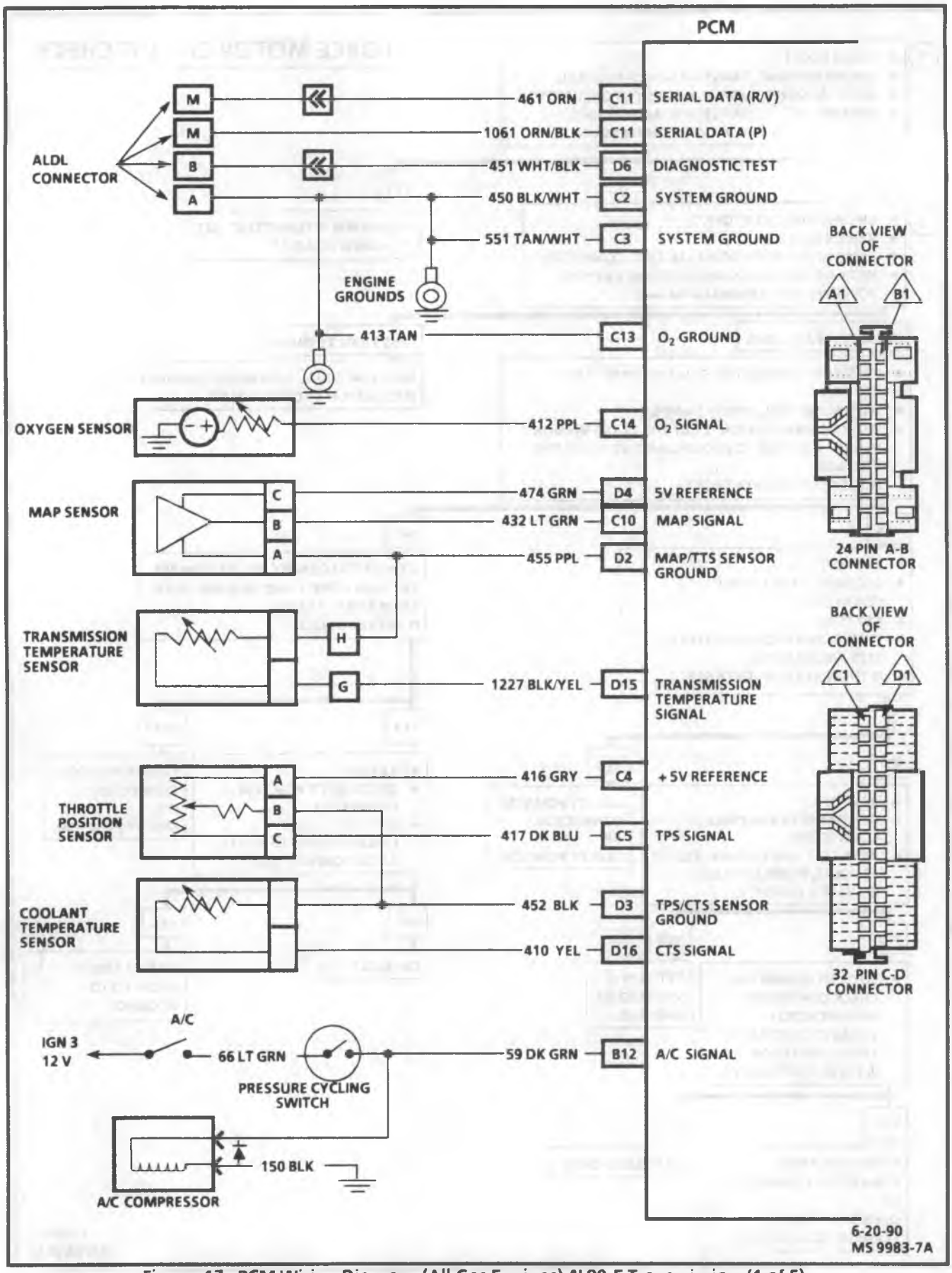

Figure 17 - PCM Wiring Diagram (All Gas Engines) 4L80-E Transmission (1 of 5)

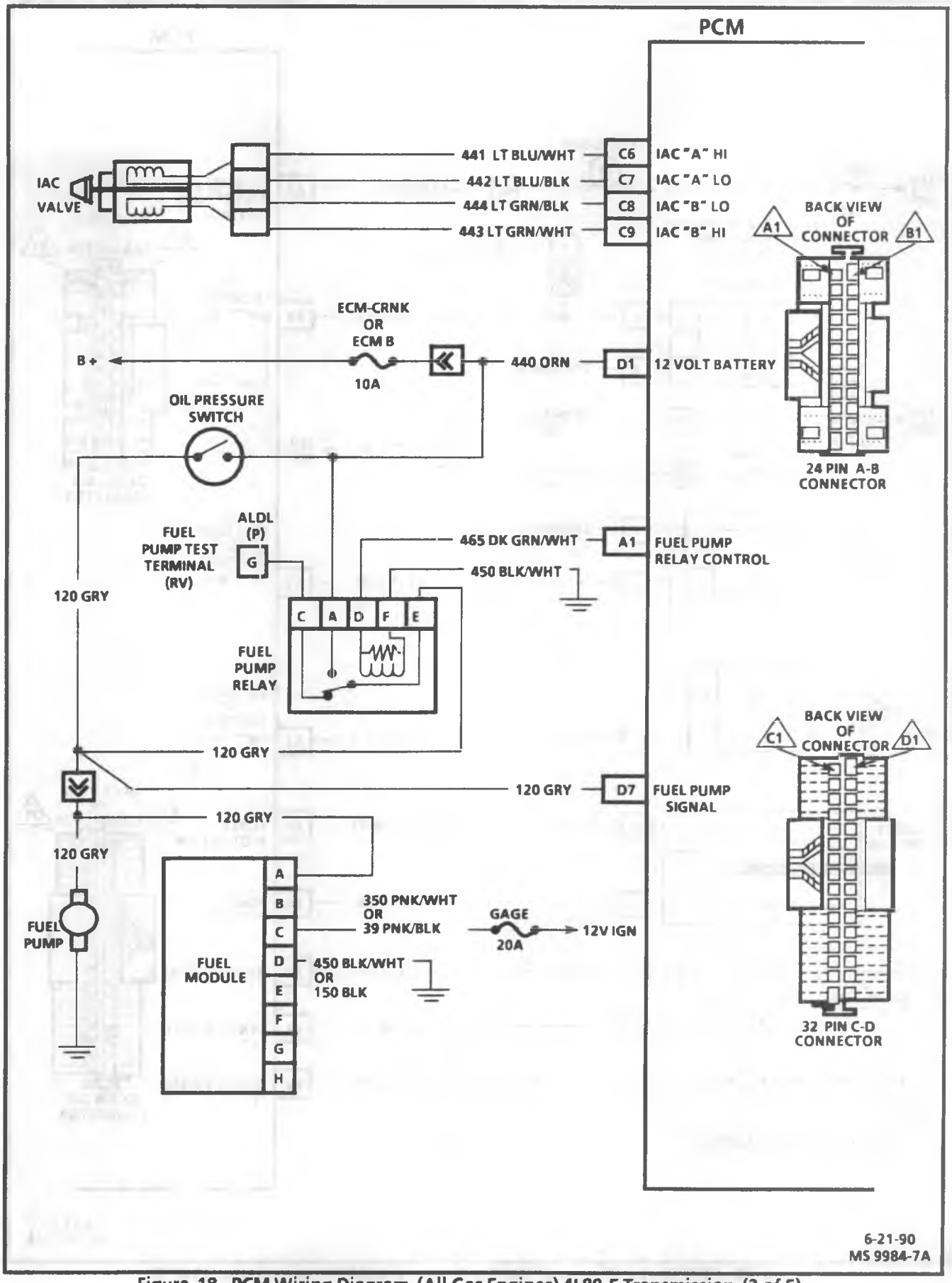

Figure 18 - PCM Wiring Diagram (All Gas Engines) 4L80-E Transmission (2 of 5)

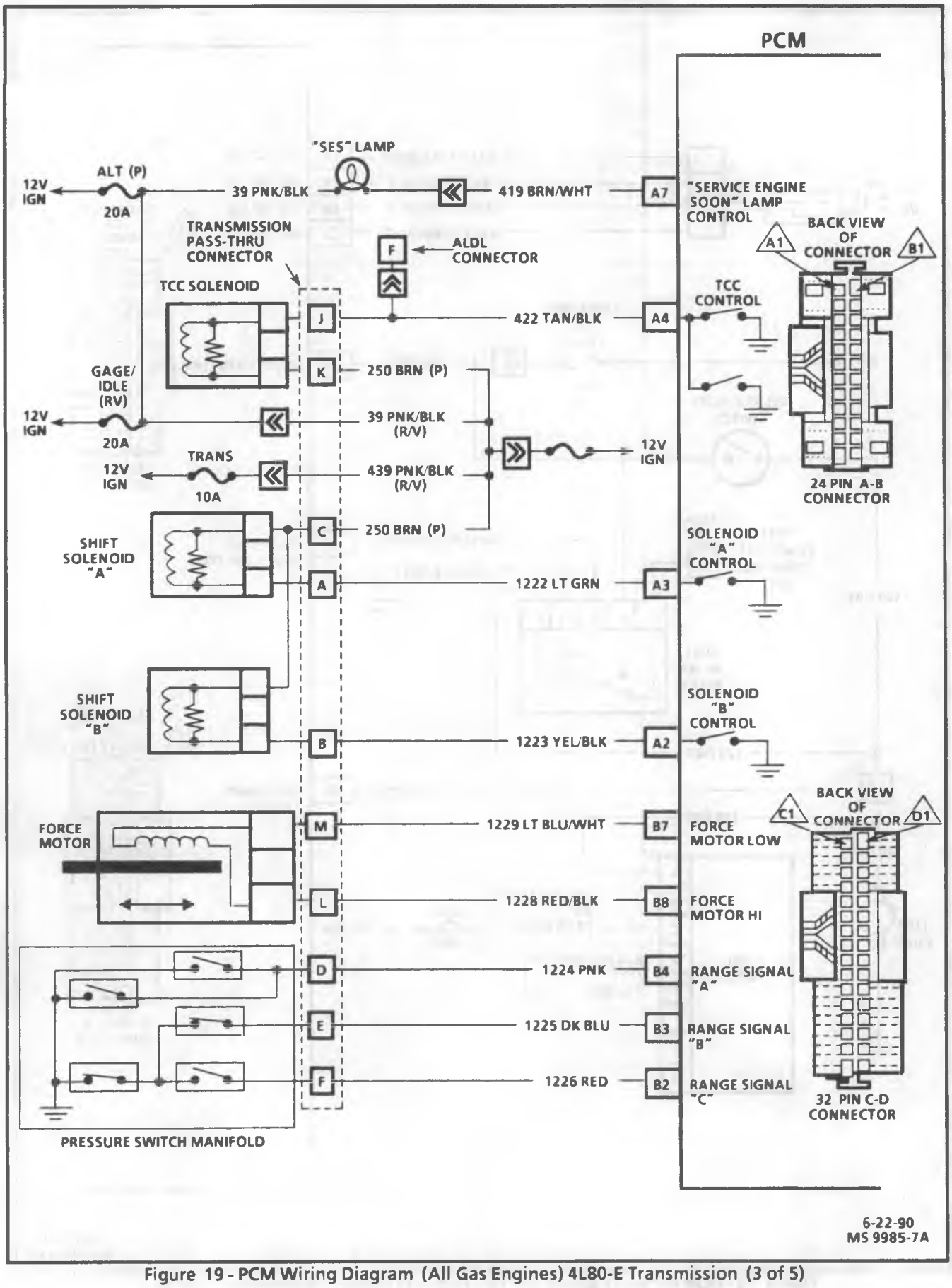

Figure 19 - PCM Wiring Diagram (All Gas Engines) 4L80-E Transmission (3 of 5)

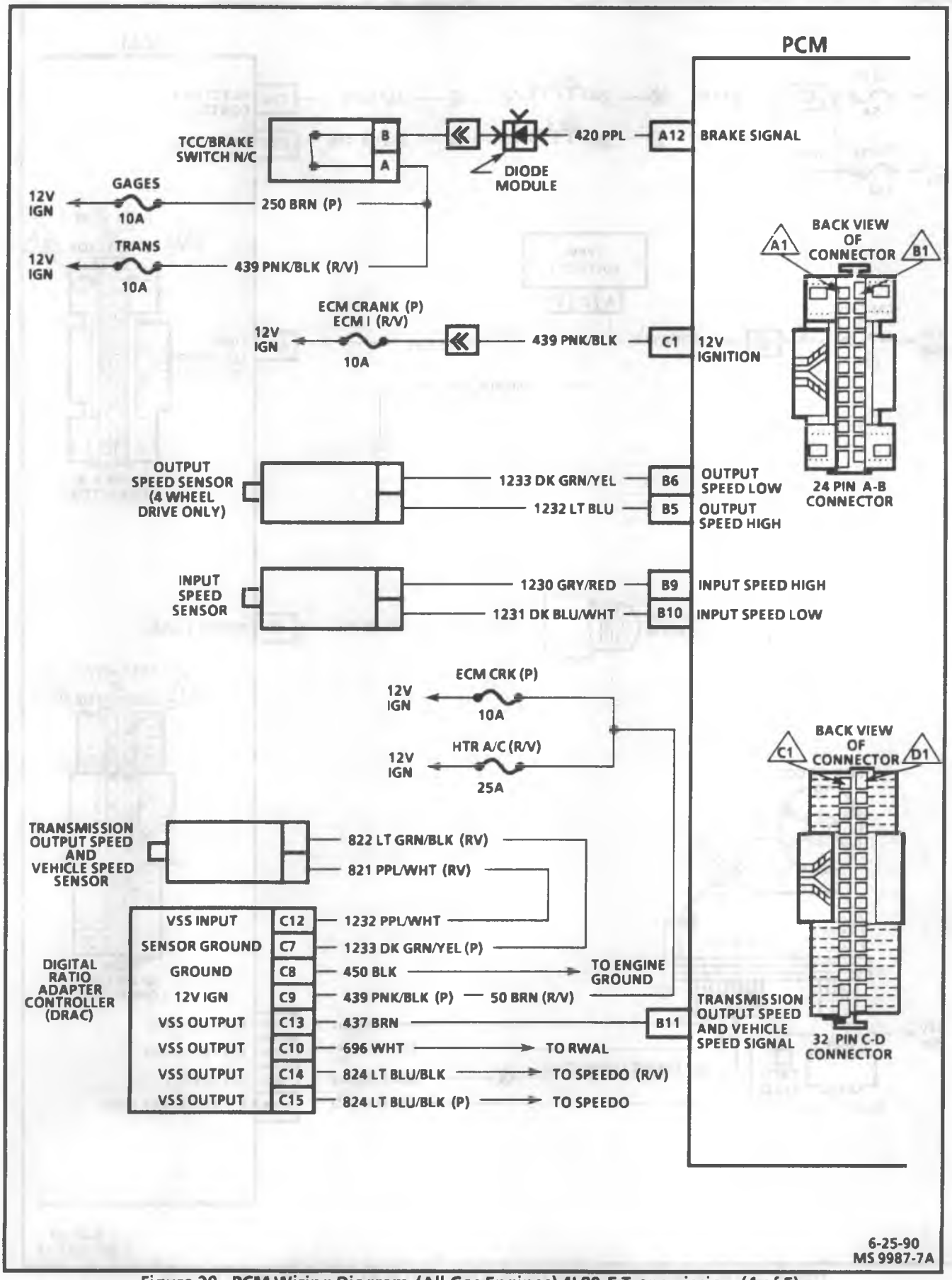

Figure 20 - PCM Wiring Diagram (All Gas Engines) 4L80-E Transmission (4 of 5)

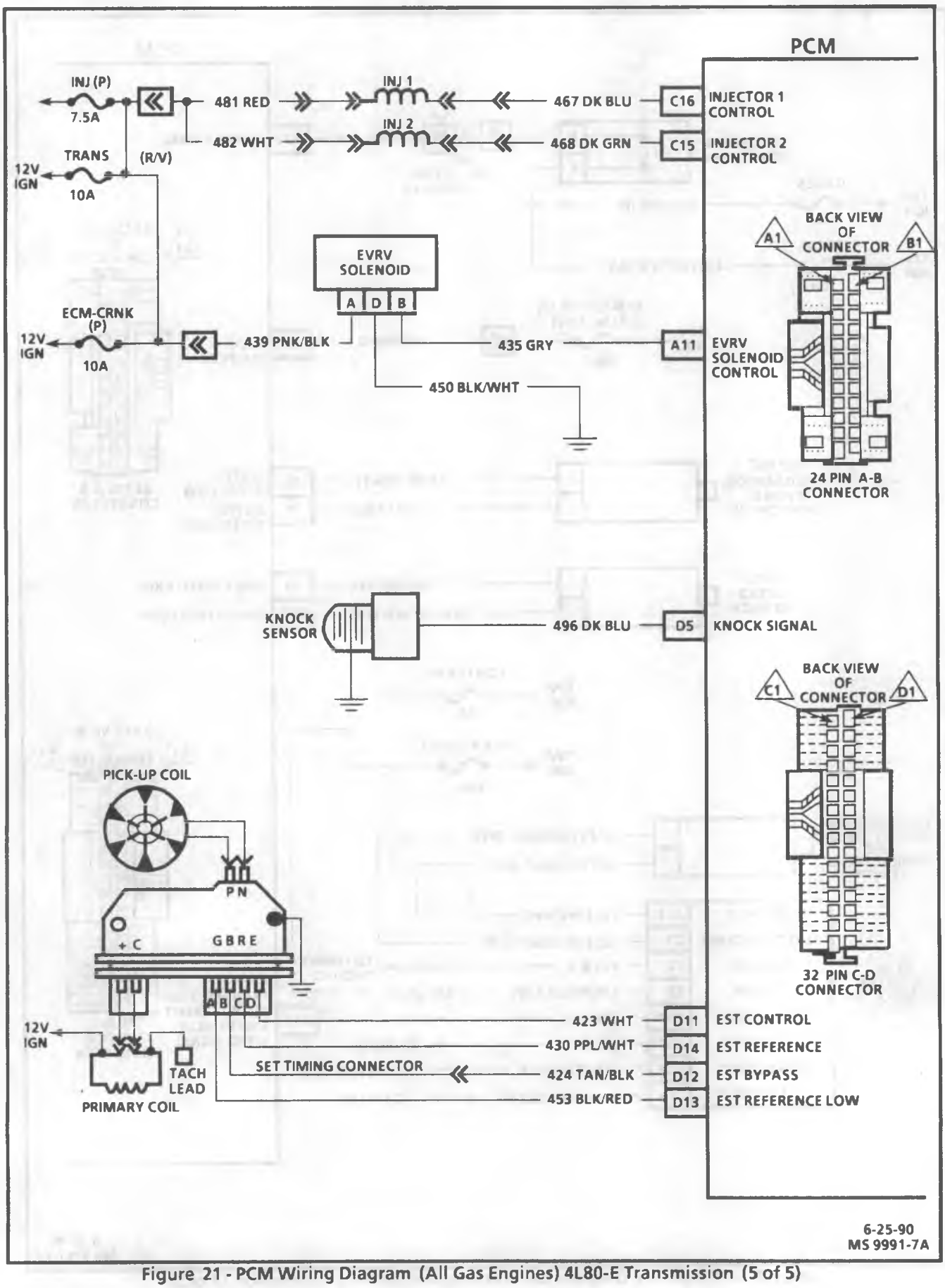

Figure 21 - PCM Wiring Diagram (All Gas Engines) 4L80-E Transmission (5 of 5)

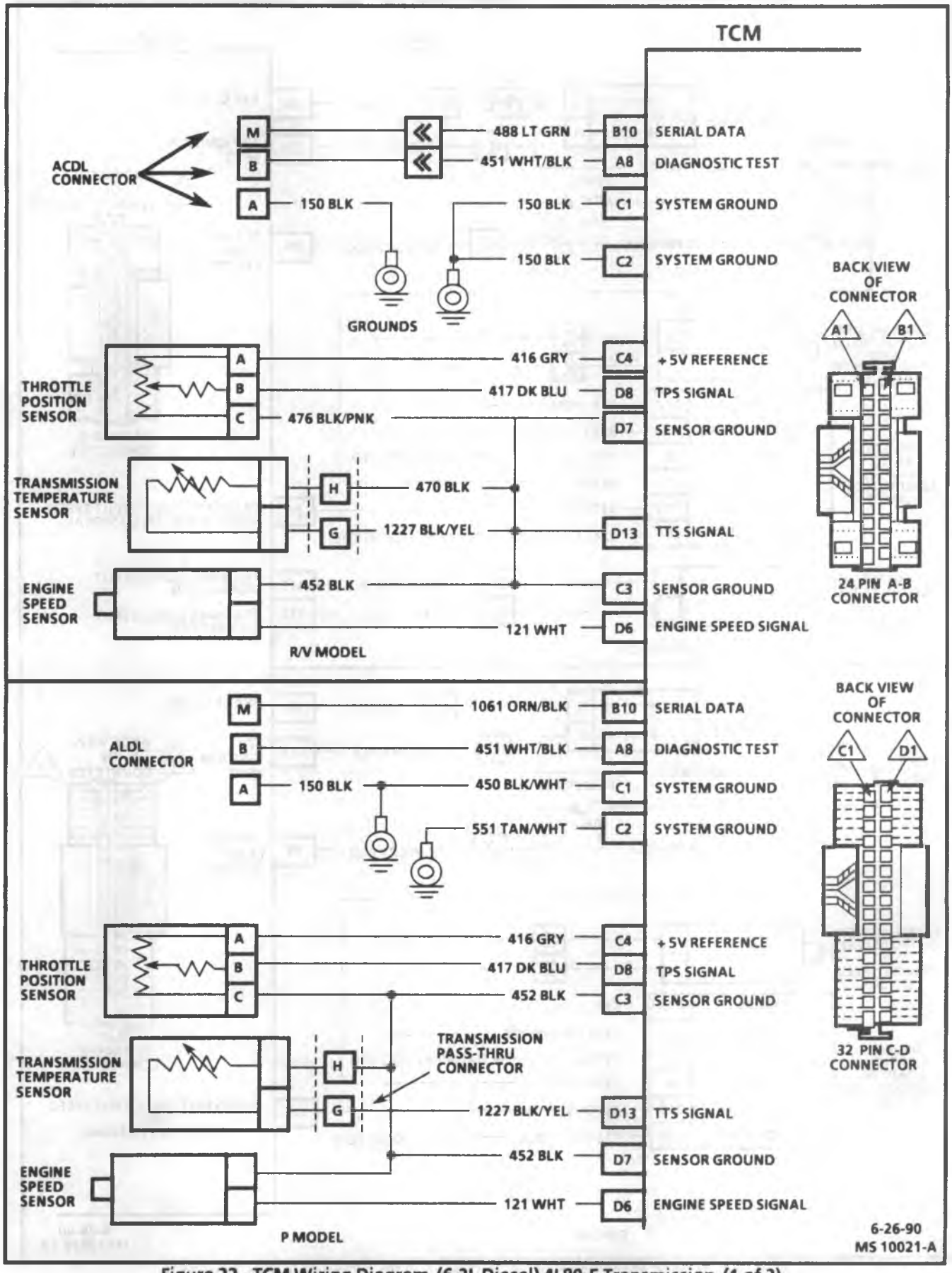

Figure 22 - TCM Wiring Diagram (6.2L Diesel) 4L80-E Transmission (1 of 3)

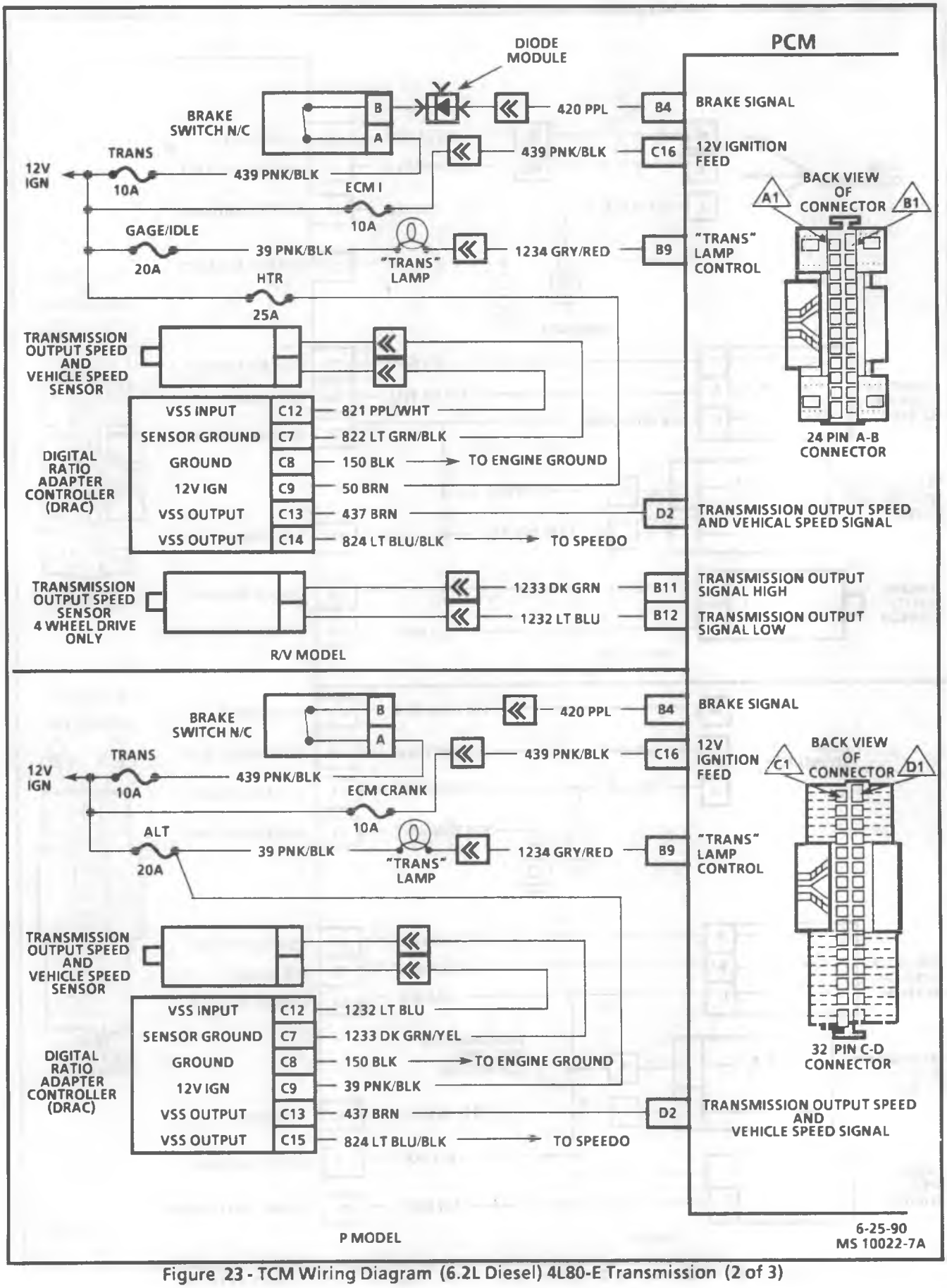

Figure 23 - TCM Wiring Diagram (6.2L Diesel) 4L80-E Transmission (2 of 3)

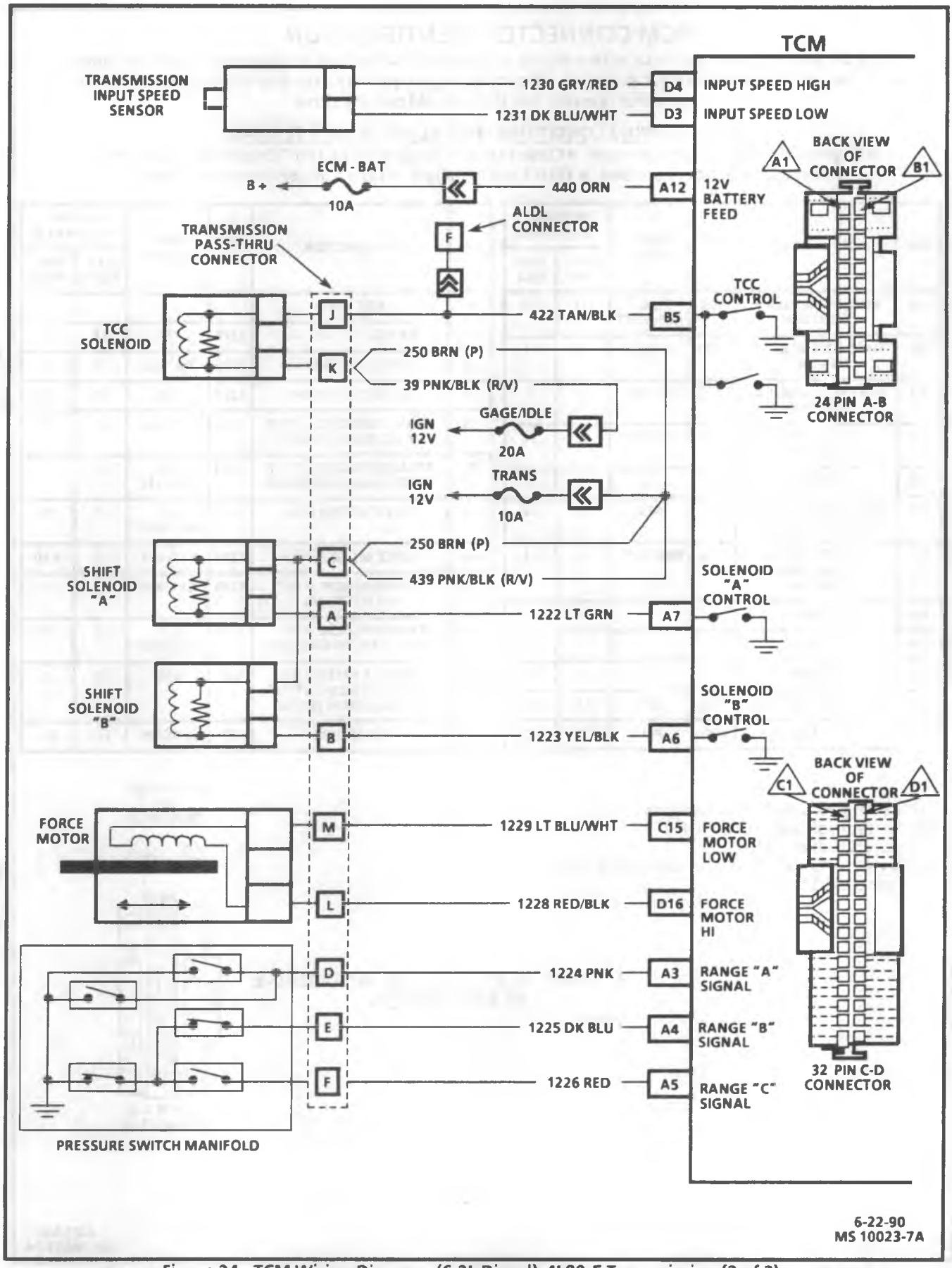

Figure 24 - TCM Wiring Diagram (6.2L Diesel) 4L80-E Transmission (3 of 3)

PCM CONNECTOR IDENTIFICATION

This PCM voltage chart is for use with a digital voltmeter to further aid in diagnosis. These voltages were derived from a known good vehicle. The voltages you get may vary due to low battery charge or other reasons, but they should be very close.

THE FOLLOWING CONDITIONS MUST BE MET BEFORE TESTING:

- Engine at operating temperature
- Closed Loop
- Engine idling (for "Engine Run" column)
- Test terminal not grounded
- Tech 1 not installed
- Tech 1 in open/road test mode

PIN	PIN FUNCTION	CKT #	WIRE COLOR	NORMAL VOLTAGES	
				KEY "ON"	ENG RUN
A1	FUEL PUMP RELAY CONTROL	465	DK GRN/WHT	(1)	14
A2	SHIFT SOLENOID "B" CONTROL	1223	YEL/BLK	12	14
A3	SHIFT SOLENOID "A" CONTROL	1222	LT GRN	*	*
A4	TCC SOLENOID CONTROL	422	TAN/BLK	12	14
A5	NOT USED	–	–	–	–
A6	EAC CONTROL (7.4L UNDER 8500 GVW)	436	BRN	12	14
A7	"SERVICE ENGINE SOON" LAMP CONTROL	419	BRN/WHT	0	14
A8	NOT USED	–	–	–	–
A9	NOT USED	–	–	–	–
A10	NOT USED	–	–	–	–
A11	EVRV (EGR) CONTROL	435	GRY	11	12
A12	BRAKE SIGNAL	420	PPL	(2)	(2)

PIN	PIN FUNCTION	CKT #	WIRE COLOR	NORMAL VOLTAGES	
				KEY "ON"	ENG RUN
B1	NOT USED	–	–	–	–
B2	RANGE "C" SIGNAL	1226	RED	12	14
B3	RANGE "B" SIGNAL	1225	DK BLU	0	*
B4	RANGE "A" SIGNAL	1224	PNK	12	14
B5	TRANSMISSION OUTPUT SPEED SIGNAL (4WD)	1232	LT BLU	5	5
B6	TRANSMISSION OUTPUT SPEED SENSOR GROUND	1233	DK GRN/YEL	0	0
B7	FORCE MOTOR LOW	1229	LT BLU/WHT	0	.85
B8	FORCE MOTOR HIGH	1228	RED/BLK	0	4.50
B9	TRANSMISSION INPUT SPEED SIGNAL	1230	GRY/RED	0	*
B10	TRANSMISSION INPUT SPEED SENSOR GROUND	1231	DK BLU/WHT	0	0
B11	VEHICLE SPEED AND TRANSMISSION OUTPUT SPEED SIGNAL (2WD)	437	BRN	0	0
B12	A/C SIGNAL	59	DK GRN	(3)	(3)

(1) Battery voltage first 20 seconds
(2) Battery voltage brakes "OFF."
0 volts brakes "ON."
(3) 0 volts A/C "OFF" battery voltage A/C "ON."
* Less than .50 volt.

BACK VIEW OF CONNECTOR

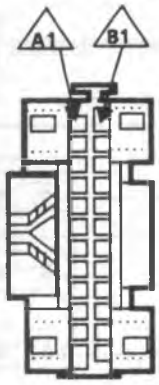

24 PIN A-B CONNECTOR

ENGINE 4.3L, 5.7L, 7.4L AND 4L80-E TRANSMISSION

1991

6-25-90
MS 10033-7A

Figure 25 - PCM Connector Terminal End View (All Gas Engines) 4L80-E Transmission (1 of 2)

PCM CONNECTOR IDENTIFICATION

This PCM voltage chart is for use with a digital voltmeter to further aid in diagnosis. These voltages were derived from a known good vehicle. The voltages you get may vary due to low battery charge or other reasons, but they should be very close.

THE FOLLOWING CONDITIONS MUST BE MET BEFORE TESTING:

- Engine at operating temperature
- Closed Loop
- Engine idling (for "Engine Run" column)
- Test terminal not grounded
- Tech 1 not installed
- Tech 1 in open/road test mode

PIN	PIN FUNCTION	CKT #	WIRE COLOR	NORMAL VOLTAGES	
				KEY "ON"	ENG RUN
C1	FUSED IGNITION FEED	439	PNK/BLK	12	14
C2	SYSTEM GROUND	450	BLK/WHT	*	*
C3	SYSTEM GROUND	551	TAN/WHT	*	*
C4	TPS REFERENCE VOLTAGE	416	GRY	5	5
C5	TPS SIGNAL	417	DK BLU	.60	(2)
C6	IAC COIL "A" HIGH	441	LT BLU/WHT	NOT	USE-ABLE
C7	IAC COIL "A" LOW	442	LT BLU/BLK	NOT	USE-ABLE
C8	IAC COIL "B" LOW	444	LT GRY/BLK	NOT	USE-ABLE
C9	IAC COIL "B" HIGH	443	LT GRN/WHT	NOT	USE-ABLE
C10	MAP SIGNAL	432	LT GRN	4.77	1.45
C11	SERIAL DATA	(1)	(1)	(1)	(1)
C12	NOT USED	–	–	–	–
C13	O_2 SENSOR GROUND	413	TAN	0	*
C14	O_2 SIGNAL	412	PPL	(3)	(4)
C15	INJECTOR #2 CONTROL	468	DK GRN	12	14
C16	INJECTOR #1 CONTROL	467	DK BLU	12	14

PIN	PIN FUNCTION	CKT #	WIRE COLOR	NORMAL VOLTAGES	
				KEY "ON"	ENG RUN
D1	BATTERY VOLTAGE FEED	440	ORN	12	14
D2	MAP/TTS SENSOR GROUND	455	PPL	0	0
D3	TPS/CTS SENSOR GROUND	452	BLK	0	0
D4	MAP REFERENCE VOLTAGE	474	GRY	5.0	5.0
D5	ESC (KNOCK) SIGNAL	496	DK BLU	4.7	4.7
D6	DIAGNOSTIC TEST TERMINAL	451	WHT/BLK	5	5
D7	FUEL PUMP SIGNAL	120	GRY		
D8	NOT USED	–	–	–	–
D9	NOT USED	–	–	–	–
D10	NOT USED	–	–	–	–
D11	EST CONTROL	423	WHT	0	1.0
D12	EST BYPASS	424	TAN/BLK	0	4.64
D13	EST REFERENCE LOW	453	BLK/RED	0	0
D14	EST REFERENCE HIGH	430	PPL/WHT	0	1.5
D15	TRANSMISSION TEMPERATURE SIGNAL	1227	BLK/YEL	2.24	2.0
D16	COOLANT TEMPERATURE SIGNAL	410	YEL	1.5	1.69

(1) 1061 ORN/BLK or 461 ORN or 488 from 2 volts to 5 volts.
(2) .70 volts measured between terminals "C5" and "D2" 4.26v W.O.T.
(3) .26 volt to .46 volt
(4) Varies (toggles) .1 volt to .9 volt.
(5) 12 volts first 20 seconds.
* Less than .50 volt.

ENGINE 4.3L, 5.7L, 7.4L AND 4L80-E TRANSMISSION

1991

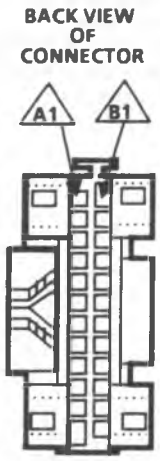

6-25-90
MS 10038-7A

Figure 26 - PCM Connector Terminal End View (All Gas Engines) 4L80-E Transmission (2 of 2)

TCM CONNECTOR IDENTIFICATION

This TCM voltage chart is for use with a digital voltmeter to further aid in diagnosis. These voltages were derived from a known good vehicle. The voltages you get may vary due to low battery charge or other reasons, but they should be very close.

THE FOLLOWING CONDITIONS MUST BE MET BEFORE TESTING:

- Engine at operating temperature
- Engine idling (for "Engine Run" column)
- Test terminal not grounded
- Tech 1 not installed
- Tech 1 in open/road test mode

PIN	PIN FUNCTION	CKT #	WIRE COLOR	NORMAL VOLTAGES	
				KEY "ON"	ENG RUN
A1	NOT USED	–	–	–	–
A2	NOT USED	–	–	–	–
A3	RANGE "A" SIGNAL	1224	PNK	12	14
A4	RANGE "B" SIGNAL	1225	DK BLU	*	*
A5	RANGE "C" SIGNAL	1226	RED	12	14
A6	SHIFT SOLENOID "B" CONTROL	1223	YEL/BLK	12	14
A7	SHIFT SOLENOID "A" CONTROL	1222	LT BRN	12	*
A8	DIAGNOSTIC TEST TERMINAL "B"	451	WHT/BLK	5	5
A9	NOT USED	–	–	–	–
A10	NOT USED	–	–	–	–
A11	NOT USED	–	–	–	–
A12	BATTERY VOLTAGE FEED	440	ORN	12	14

PIN	PIN FUNCTION	CKT #	WIRE COLOR	NORMAL VOLTAGES	
				KEY "ON"	ENG RUN
B1	NOT USED	–	–	–	–
B2	NOT USED	–	–	–	–
B3	A/C SIGNAL	59	DK GRN	(1)	(1)
B4	BRAKE SIGNAL	420	PPL	(2)	(2)
B5	TCC CONTROL	422	TAN/BLK	12	14
B6	NOT USED	–	–	–	–
B7	NOT USED	–	–	–	–
B8	NOT USED	–	–	–	–
B9	"TRANS" LAMP CONTROL	(3)	(3)	0	14
B10	SERIAL DATA	(4)	(4)	(5)	(5)
B11	NOT USED	–	–	–	–
B12	NOT USED	–	–	–	–

(1) 0 volts A/C "OFF."
Battery voltage A/C "ON."
(2) Battery voltage brakes "OFF."
0 volts brakes "ON."
(3) 419 BRN/WHT or 1234 GRY/RED.
(4) 1061 ORN/BLK or 461 ORN or 488 LT GRN.
(5) Varies 2 to 5 volts.
* Less than .50 volt.

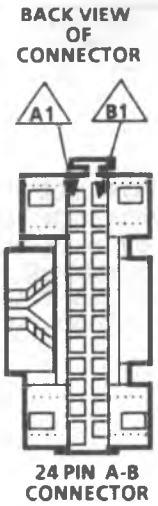

ENGINE 6.2L DIESEL AND 4L80-E TRANSMISSION

1991

6-23-90
MS 10040-7A

Figure 27 - TCM Connector Terminal End View (6.2L Diesel) 4L80-E Transmission (1 of 2)

TCM CONNECTOR IDENTIFICATION

This TCM voltage chart is for use with a digital voltmeter to further aid in diagnosis. These voltages were derived from a known good vehicle. The voltages you get may vary due to low battery charge or other reasons, but they should be very close.

THE FOLLOWING CONDITIONS MUST BE MET BEFORE TESTING:

- Engine at operating temperature
- Engine idling (for "Engine Run" column)
- Test terminal not grounded
- Tech 1 not installed
- Tech 1 in open/road test mode

PIN	PIN FUNCTION	CKT #	WIRE COLOR	NORMAL VOLTAGES	
				KEY "ON"	ENG RUN
C1	SYSTEM GROUND	450	BLK/WHT	0	0
C2	SYSTEM GROUND	551	TAN/WHT	0	0
C3	SENSOR GROUND	452	BLK	0	0
C4	TPS REFERENCE	416	GRY	5	5
C5	NOT USED	–	–	–	–
C6	NOT USED	–	–	–	–
C7	NOT USED	–	–	–	–
C8	NOT USED	–	–	–	–
C9	NOT USED	–	–	–	–
C10	NOT USED	–	–	–	–
C11	NOT USED	–	–	–	–
C12	NOT USED	–	–	–	–
C13	NOT USED	–	–	–	–
C14	NOT USED	–	–	–	–
C15	FORCE MOTOR LOW	1229	BLU/WHT	0	.85
C16	IGNITION FEED	439	PNK/BLK	12	14

PIN	PIN FUNCTION	CKT #	WIRE COLOR	NORMAL VOLTAGES	
				KEY "ON"	ENG RUN
D1	NOT USED	–	–	–	–
D2	TRANSMISSION OUTPUT SPEED SIGNAL (2WD)	437	BRN	(1)	(1)
D3	TRANSMISSION INPUT SPEED SENSOR GROUND	1230	GRY/RED	0	0
D4	TRANSMISSION INPUT SPEED SIGNAL	1230	GRY/ERD	0	(2)
D5	NOT USED	–	–	–	–
D6	ENGINE SPEED SIGNAL	(3)	(3)	0	(4)
D7	SENSOR GROUND	452	BLK	0	0
D8	TPS SIGNAL	417	DK BLU	.67	(5)
D9	NOT USED	–	–	–	–
D10	NOT USED	–	–	–	–
D11	NOT USED	–	–	–	–
D12	NOT USED	–	–	–	–
D13	TRANSMISSION TEMPERATURE SIGNAL	1227	BLK/YEL	(6)	(6)
D14	NOT USED	–	–	–	–
D15	NOT USED	–	–	–	–
D16	FORCE MOTOR HIGH	1228	RED/BLK	.11	4.43

(1) Varies from .06 to battery voltage depending on position of drive wheels.
(2) 10.5 volts AC, varies with rpm.
(3) 643 DK BLU/WHT (CK).
121 WHT (R/V, P, G).
(4) .40 volt AC, varies with rpm.
(5) .67 volt to 4.8 volts W.O.T.
(6) About 2 volts varies with temperature.

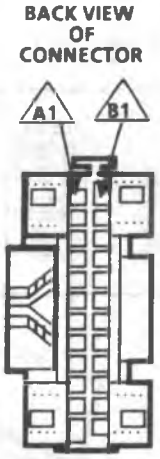

ENGINE 6.2L DIESEL AND 4L80-E TRANSMISSION

1991

6-23-90
MS 10049-7A

Figure 28 - TCM Connector Terminal End View (6.2L Diesel) 4L80-E Transmission (2 of 2)

HIGH IMPEDANCE MULTIMETER
(DIGITAL VOLTMETER-DVM)
J 34029-A

VOLTMETER - Voltage Position Measures amount of voltage. When connected in parallel to an existing circuit. A digital voltmeter with 10 megohm input impedance is used because some circuits require accurate low voltage readings, and some circuits in the ECM have a very high resistance.

AMMETER - When used as ammeter, this meter also accurately measures extremely low current flow. Refer to meter instructions for more information.

- Selector must be set properly for both function and range. DC is used for most automotive measurements.

OHMMETER - Measures resistance of circuit directly in ohms. Refer to meter for more information.

- OL Display in all ranges indicates open circuit.
- Zero display in all ranges indicates a short circuit.
- Intermittent connection in circuit may be indicated by digital reading that will not stabilize on circuit.
- Range Switch.
  - 200Ω – Reads ohms directly
  - 2K,20K,200KΩ – Reads ohms in thousands
  - 2M and 20MΩ - Reads ohms in millions

94-00101 A

TECH 1 DIAGNOSTIC COMPUTER

A hand-held "SCAN" tool used to analyze and diagnose fuel and emission system. Also can be used to analyze other computer system.

TACHOMETER

Use inductive trigger signal pickup type to check RPM.

J 35616

CONNECTOR TEST ADAPTER KIT

Used to make electrical test connections in current Weather Pack, Metri - Pack and Micro-Pack style terminals.

5-24-90
7S 3534-6E

Figure 29 - Special Tools (1 of 2)

J 34636/BT8405	**CIRCUIT TESTER** Used to check all relays and solenoids before connecting them to a new ECM. Measurese the circuit resistance and indicates pass or fail via green or red LED. Amber LED indicates current polarity. Can also be used as a non-powered continuity checker.
J 35689-A	**METRI-PACK TERMINAL REMOVER** Used to remove 150 series Metri-Pack "pull-to-seat" terminals from connectors. Refer to wiring harness service in Section "3" for removal procedure.
J 28742-A/BT8234-A	**WEATHER PACK TERMINAL REMOVER** Used to remove terminals from Weather Pack connectors. Refer to wiring harness service in Section "3" for removal procedure.
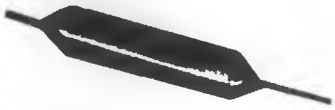 J 33095/BT8234-A	**ECM CONNECTOR TERMINAL REMOVER** Used to remove terminal from Micro-Pack connectors. Refer to wiring harness service in Section "3" for removal procedure. 6-14-90 MS 10094-7A

Figure 30 - Special Tools (2 of 2)

SECTION 7B

MANUAL TRANSMISSION

NOTICE: When fasteners are removed, always reinstall them at the same location from which they were removed. If a fastener needs to be replaced, use the correct part number fastener for that application. If the correct part number fastener is not available, a fastener of equal size and strength (or stronger) may be used. Fasteners that are not reused, and those requiring thread locking compound will be called out. The correct torque value must be used when installing fasteners that require it. If the above conditions are not followed, parts or system damage could result.

CONTENTS

SUBJECT	PAGE
Description	7B-1
Inspection	7B-1
Control Linkages	7B-1
Transmission Shift Effort	7B-2
Diagnosis of Manual Transmission	7B-2
On-Vehicle Service	7B-2
Drain and Fill	7B-2
Rear Oil Seal	7B-2
Vehicle Speed Sensor	7B-4
Shift Control Lever	7B-4
Transmission Replacement	7B-4
Specifications	7B-6
Fastener Torque	7B-6
Lubrication	7B-6
Special Tools	7B-7

DESCRIPTION

117 MM 4-SPEED (SM 465)

The four speed Muncie 117 mm transmission (RPO M20) uses a constant mesh first gear and synchronized second, third and fourth gears.

Gear shifting is done with a transmission cover mounted shift lever. The cover has a ball pin type interlock which stops the transmission from being shifted into two gears at one time.

NVG 4500 5-SPEED (P MODELS)

The five speed D-Spec. transmission (RPO MT8) uses a constant mesh first gear and synchronized second, third, fourth and fifth gears. Gear shifting is done with a transmission cover mounted shift lever. The cover has a ball type interlock which stops the transmission from being shifted into two gears at one time.

The On Vehicle Service aspect of this transmission is nearly identical to the 117 mm transmission. The following service procedures should be used for both the NVG 4500 and 117 mm transmissions, unless otherwise noted.

INSPECTION

- Before repairing the transmission, check the clutch and shifting linkages to be sure the problem is in the transmission.
- If a hydraulic clutch is used, there are no adjustments for linkage or clutch pedal.

CONTROL LINKAGES

1. Check the clutch and shift linkage for dirt, wear, or damage.
2. Check clutch free pedal travel adjustment and adjust as necessary. Refer to CLUTCH (SEC. 7C).

CLUTCH SPIN DOWN TIME

1. Run the engine at a normal idle with the transmission in neutral and the clutch engaged.
2. Disengage the clutch, wait nine seconds and shift the transmission into reverse.
3. If a grinding noise is heard, check the clutch for the problem. Refer to CLUTCH (SEC. 7C).

TRANSMISSION SHIFT EFFORT

1. Line up the problem gear by shifting into the gear and back to neutral.
2. Check the effort needed to shift into the problem gear using a torque wrench.
3. If the shift effort is more than 5 N•m (50 in. lbs.) and the shift lever shaft is clean and not damaged, add an anti-chatter lubricant, (positraction additive) to the transmission.
4. If the shift effort is still high, repair the transmission as needed.

DIAGNOSIS OF MANUAL TRANSMISSION

The following diagnosis information is to be used only as a guide to locating a transmission problem.

PROBLEM	POSSIBLE CAUSE	CORRECTION
Leaks Lubricant	1. Lubricant level too high. 2. Main drive bearing retainer or gasket loose or damaged. 3. Side cover or gasket loose or damaged. 4. Rear extension seal damaged. 5. Countershaft loose in case.	1. Drain to correct level. 2. Tighten or replace. 3. Tighten or replace. 4. Replace. 5. Replace case.
Noisy Shifting	1. Clutch linkage out of adjustment or damage. 2. Synchronizers or gears worn or damaged.	1. Adjust or replace. Refer to CLUTCH (SEC. 7C). 2. Repair the transmission.
Noisy Neutral	1. Pilot bearing worn or damaged. 2. Main drive gear or countergear bearings worn or damaged.	1. Replace. Refer to CLUTCH (SEC. 7C). 2. Repair the transmission.
Noisy Operation	1. Lubricant level low. 2. Synchronizers worn or damaged. 3. Synchronizers worn or damaged. 4. Gears worn or damaged.	1. Fill to correct level. 2. Repair the transmission. 3. Repair the transmission. 4. Repair the transmission.
Slips Out Of Gear	1. Shift lever seal stiff. 2. Pilot bearing loose or damaged. 3. Dirt between the clutch housing and transmission. 4. Transmission loose. 5. Main drive gear retainer loose or damaged. 6. Transmission not aligned.	1. Replace. 2. Replace. Refer to CLUTCH (SEC. 7C). 3. Clean the mating surfaces. 4. Tighten. 5. Tighten or replace. 6. Align.

GMTB-3166-2A

ON-VEHICLE SERVICE

DRAIN AND FILL

Remove or Disconnect (Figure 1)

1. Filler plug (102).
2. Drain plug (103).
3. Transmission oil.
   - Catch the oil in a pan.

Install or Connect (Figure 1)

1. Drain plug (103).
2. New transmission oil. Refer to MAINTENANCE AND LUBRICATION (SEC. 0B) for lubricant specification.
3. Filler plug (102).

REAR OIL SEAL

Remove or Disconnect (Figure 1)

- Raise the vehicle.

1. Transmission oil.
2. Propeller shaft. Refer to PROPELLER SHAFT (SEC. 4A).
3. Parking brake if used. Refer to PARKING BRAKE (SEC. 5C).
4. Speed sensor harness (115).
5. Nut (123) and the flange (122).
6. Transmission mount.
   - Support the transmission with a jack.
7. Screws (125) and the retainer (121).

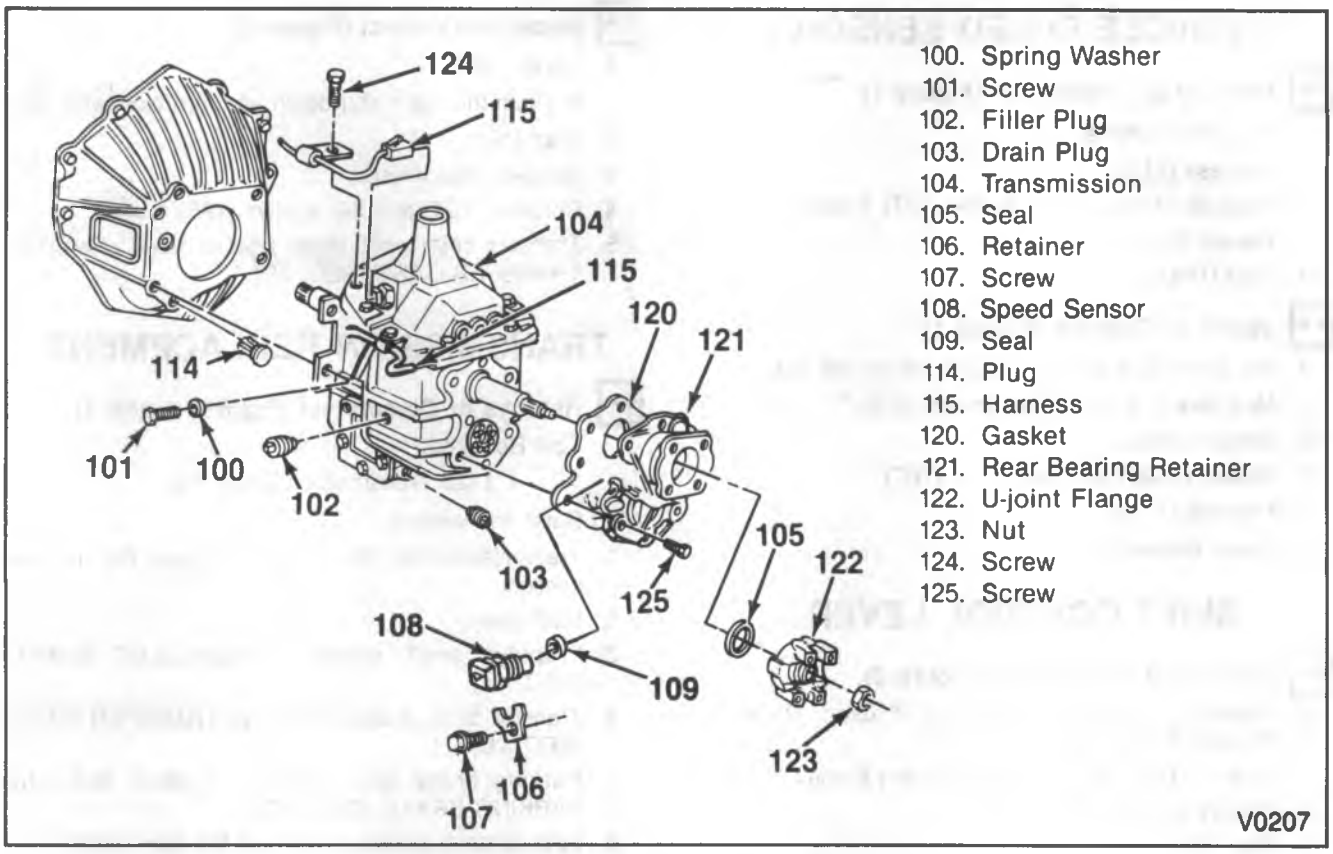

100. Spring Washer
101. Screw
102. Filler Plug
103. Drain Plug
104. Transmission
105. Seal
106. Retainer
107. Screw
108. Speed Sensor
109. Seal
114. Plug
115. Harness
120. Gasket
121. Rear Bearing Retainer
122. U-joint Flange
123. Nut
124. Screw
125. Screw

Figure 1—Transmission and Components

8. Gasket (120).
   - Scrape all gasket material from the retainer and the case.
9. Seal (105).

Install or Connect (Figures 1 and 2)

Tool Required:

J 22834 Rear Retainer Seal Installer

1. Sealant (GM Part No. 1052942) on the outside of a new seal (105).
2. New seal (105) using J 22834-2 (figure 2).
   - Use J 22834-1 if a parking brake is used.
   - Fill between the seal lips with chassis grease.
3. New gasket (120).
4. Retainer (121) and the screws (125).
5. Transmission mount.
   - Remove the jack.
6. Flange (122) and the nut (123).
7. Speed sensor harness (115).
8. Parking brake if used. Refer to BRAKES (SEC. 5).
9. Propeller shaft. Refer to PROPELLER SHAFT (SEC. 4A).
10. New transmission oil. Refer to "Drain and Fill" in this section.

- Lower the vehicle.

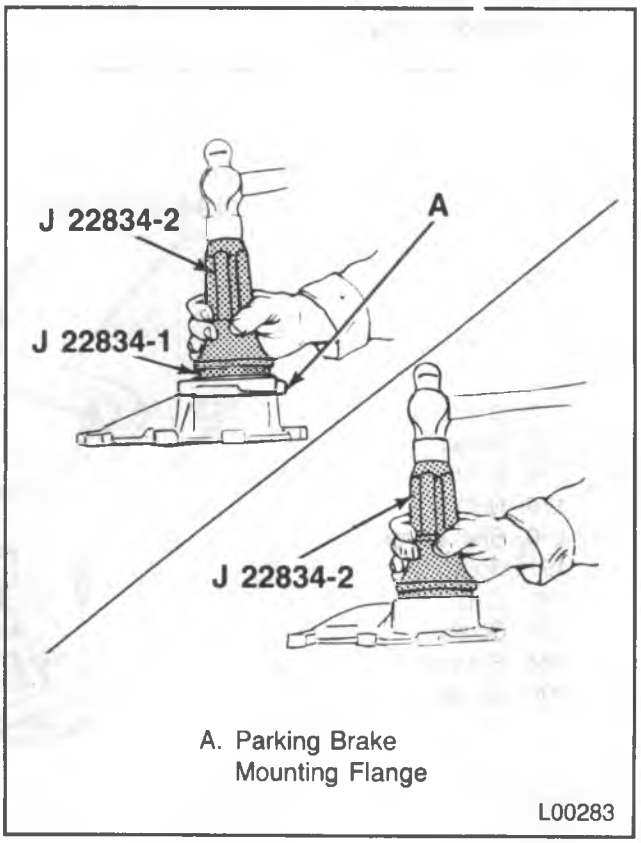

Figure 2—Retainer Seal Installation

VEHICLE SPEED SENSOR

Remove or Disconnect (Figure 1)

- Raise the vehicle.

1. Harness (115).
2. Retainer (106) and the screw (107) if used.
3. Sensor (108).
4. Seal (109).

Install or Connect (Figure 1)

- Put a thin coat of transmission oil on the seal.

1. New seal (109) onto the sensor (108).
2. Sensor (108).
3. Retainer (106) and the screw (107).
4. Harness (115).

- Lower the vehicle.

SHIFT CONTROL LEVER

Remove or Disconnect (Figure 3)

1. Transfer case shift lever boot, if used. Refer to TRANSFER CASE (SEC. 7D).
2. Screws (195) and the retainer (194) if used.
3. Screws (193) if used.
4. Boot (191).
5. Lever (190).
   - Push the cap (192) down and turn counterclockwise (A).

Install or Connect (Figure 3)

1. Lever (190).
   - Push the cap (192) down and turn clockwise (B).
2. Boot (191).
3. Screws (193) if used.
4. Retainer (194) and the screws (195) if used.
5. Transfer case shift lever boot if used. Refer to TRANSFER CASE (SEC. 7D).

TRANSMISSION REPLACEMENT

Remove or Disconnect (Figures 1 and 4)

Tool Required:

J 1126 Transmission Guide Pin

- Raise the vehicle.

1. Transmission oil. Refer to "Drain and Fill" in this section.
2. Shift lever.
3. Propeller shaft. Refer to PROPELLER SHAFT (SEC. 4A).
4. Transfer case, if used. Refer to TRANSFER CASE (SEC. 7D).
5. Parking brake and controls, if used. Refer to PARKING BRAKE (SEC. 5C).
6. Speedometer sensor (108) and the seal (109).
7. Wiring harnesses as used.
8. Exhaust pipes. Refer to EXHAUST (SEC. 6F).
   - Support the transmission with a jack.

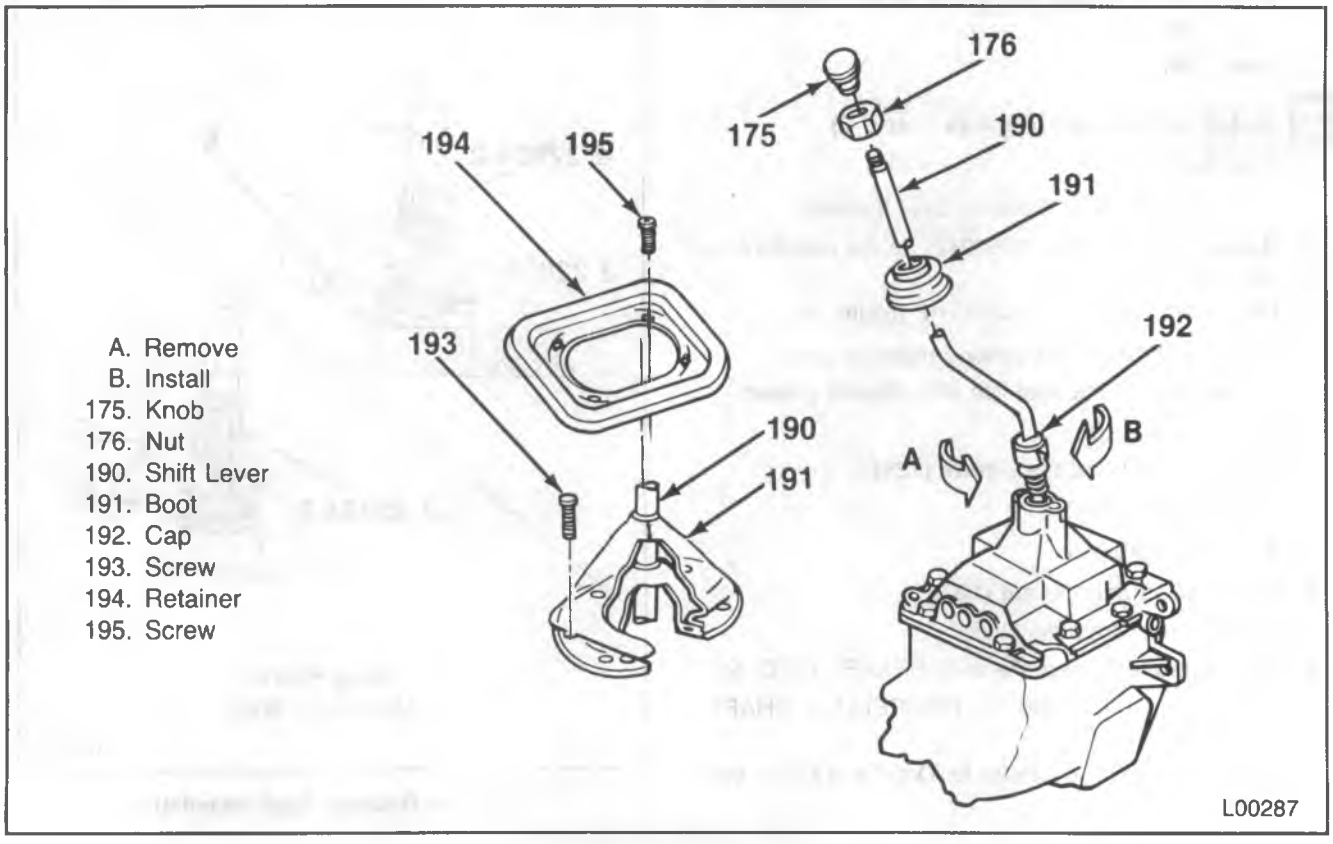

Figure 3—Shift Control Lever

9. Any parts needed for clearance.
10. Crossmember.
11. Screws (101) and the spring washers (100).
    - Remove the top two first and install guide pins J 1126 (figure 4).
12. Transmission (104).

Important

- Do not let the transmission hang from the clutch.
- Pull the transmission straight back on the clutch hub splines.
- Support the clutch release bearing.

13. Plugs (114), if they are loose or damaged.
    - Note the location of the plugs before removing.

Install or Connect (Figures 1 and 4)

Tool Required:

J 1126 Transmission Guide Pin

1. New plugs (114) if needed.
   - Put a thin coat of high temperature grease on the main drive gear splines.
2. Transmission (104).
   - Shift the transmission into high gear before installing.
   - Install guide pins J 1126 in the top two holes (figure 4).
   - Remove the clutch release bearing support.

Important

- Do not force the transmission into the clutch.
- Do not let the transmission hang from the clutch, leave the jack under the transmission to support it.

3. New spring washers (100) and the screws (101).
   - Install the two bottom screws before removing the guide pins J 1126.
4. Crossmember.
- Remove the jack.
5. Any parts that were removed for clearance.
6. Exhaust pipes. Refer to EXHAUST (SEC. 6F).
7. Wiring harnesses as used.
8. New seal (113) and the speedometer cable (112).
9. Parking brake lever and controls if used. Refer to PARKING BRAKE (SEC. 5C).
10. Transfer case if used. Refer to TRANSFER CASE (SEC. 7D).
11. Propeller shaft. Refer to PROPELLER SHAFT (SEC. 4A).
12. Shift lever.
13. New transmission oil. Refer to "Drain and Fill" in this section.
- Lower the vehicle.

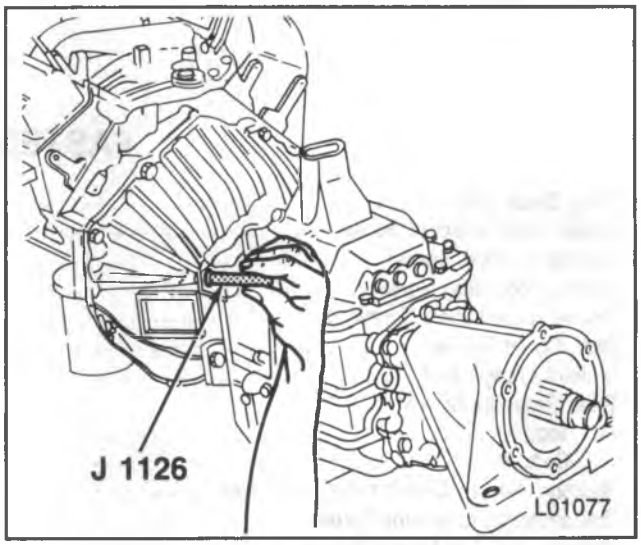

Figure 4—Installing Guide Pins

SPECIFICATIONS

Transmission	4 Speed	5 Speed
RPO	M20	MT8
Make Case Material Torque Rating (Ft. Lb.)	Muncie Cast Iron 385	New Venture Gear Cast Iron 400
Ratio (:1) 1st Gear	6.55	6.34
2nd Gear	3.58	3.44
3rd Gear	1.70	1.71
4th Gear	1.00	1.00
5th Gear	—	0.73
Reverse	6.09	6.34
Shafts Center Distance	117 mm (4.5 inch)	109 mm (4.3 inch)
Clutch Plate Diameter	279 mm* (11.0 inch)	302 mm (12.0 inch)

*302 mm (12.0 inch) with Diesel Engine

GMTB-3045-2A

FASTENER TORQUE

	N·m	Ft. Lbs.
Plug, Drain and Fill	23	17
Cross Lever Bracket Screw	25	18
Control Bracket Screw	33	24
Control Mounting Screw	45	33
Control Lubrication Screw	45	33
Side Cover Screw	20	15
U-Joint Flange Nut	135	100
Rear Retainer Screw		
Top	27	20
Bottom	40	30
Transmission to Clutch Housing Screw	100	74
Transmission to Mount Screw	47	35
Crossmember to Mount Screw	54	40
Crossmember to Frame Screw	75	55

TB-3046-2A

LUBRICATION

Capacity	4.0 L	4.2 qts.
Type Recommended		API GL5 SAE 80W90

GMTB-3047-2A

SPECIAL TOOLS

1.

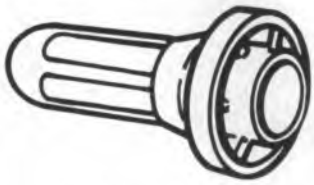

J 22834

2.

J 1126

1. Rear Retainer Seal Installer
2. Transmission Guide Pins

V0054

SECTION 7C

CLUTCH

NOTICE: When fasteners and removed always reinstall them at the same location from which they were removed. If a fastener needs to be replaced, use the correct part number fastener for that application. If the correct part number fastener is not available, a fastener of equal size and strength (or stronger) may be used. Fasteners that are not reused, and those requiring thread locking compound will be called out. The correct torque value must be used when installing fasteners that require it. If the above conditions are not followed, parts or system damage could result.

CONTENTS

SUBJECT	PAGE
Description	7C- 1
Clutch	7C- 1
Clutch Controls	7C- 1
Inspection	7C- 2
Linkage	7C- 2
Clutch Pedal	7C- 2
Release Bearing	7C- 2
Hydraulic Clutch	7C- 2
Diagnosis	7C- 3
On-Vehicle Service	7C- 4
Hydraulic Clutch Pedal	7C- 4
Mechanical Clutch Pedal	7C- 5
Master Cylinder and Reservoir	7C- 6
Master Cylinder Unit Repair	7C- 7
Secondary (Slave) Cylinder and Hydraulic Line Replacement	7C- 7
Secondary (Slave) Cylinder Unit Repair	7C- 8
Clutch Linkage	7C- 9
Cross Lever	7C- 9
Hydraulic Clutch Bleeding	7C-11
Clutch Pedal Free Travel Adjustment	7C-11
Clutch Assembly and Pilot Bearing	7C-12
Specifications	7C-15
Special Tools	7C-15

DESCRIPTION

CLUTCH

The principal components on a clutch are the driven plate, pressure plate, diaphragm-type spring and a release bearing.

The driven plate is splined on the transmission clutch shaft so that it can move back and forth when the clutch is disengaged, and can turn the shaft when the clutch is engaged. The driven plate has friction pads riveted to both sides and a flexible center with springs to absorb vibration.

The pressure plate has a machined surface that fits against the driven plate and a diaphragm-type spring mounted in a cover on the pressure plate. The spring holds the pressure plate and driven plate together against the engine flywheel when the clutch is engaged.

The release bearing is a ball-thrust bearing on a sleeve that pushes in on the center of the diaphragm spring, releasing pressure on the pressure plate and driven plate to disengage the clutch.

CLUTCH CONTROLS

HYDRAULIC CONTROLS — R/V MODELS

The hydraulic clutch has a master cylinder with a separate reservoir. The clutch pedal moves the master cylinder pushrod and a secondary cylinder at the clutch housing moves the clutch fork and the release bearing.

MECHANICAL CONTROLS — P-MODELS

P-models have an upper pull rod from the clutch pedal to a bell crank lever and a lower pull rod from the bell crank lever to a cross lever. The cross lever moves the clutch fork and the release bearing with an adjustable rod.

INSPECTION

Before repairing the clutch, check the transmission and shift linkage, and the engine mounts to be sure the problem is in the clutch.

LINKAGE

1. Check the clutch rods for bending and damage.
2. Check for worn swivels and loose or damaged mounting brackets.
3. Check the clutch lever for bending, wear and damage.
   - Be sure there is some clearance between the clutch lever and the mounting brackets and ball studs.
4. Lubricate the clutch linkage.

CLUTCH PEDAL

1. Check the bushings for dirt, wear, and damage.
2. Check the clutch release.
   - Hold the clutch pedal 12.7 mm (1/2 in.) above the floor mat with the engine running and the parking brake on.
   - Move the shift lever from the first gear to reverse gear and back several times.
   - If the shift is smooth, the clutch is disengaging fully.
   - Adjust the clutch linkage and repeat, if needed.

RELEASE BEARING

1. Check the clutch fork for dirt, wear and damage.
2. Check the clutch fork for proper installation and lubrication.
3. Check the release bearing and clearance between the spring fingers and the transmission.

HYDRAULIC CLUTCH

1. Check the hoses for cracks and wear.
2. Check the cylinders for loose mounting screws and signs of leakage.
3. Check the clutch pedal travel, it should be 210.8 mm (8.3 in.).
4. Check the secondary pushrod travel at the clutch fork, it should be at least 25.4 mm (1.0 in.).
5. Bleed the controls and repeat as needed.

DIAGNOSIS

Problem	Possible Cause	Correction
Will Not Disengage (Pedal to the Floor and Hard to Shift into Reverse)	1. Linkage loose or out of adjustment. 2. Air in the hydraulic system. 3. Master or secondary hydraulic cylinder seals worn. 4. Not enough pedal travel. 5. Release bearing worn or damaged. 6. Driven plate worn or damaged. 7. Clutch fork off the ball stud. 8. Driven plate binding. 9. Driven plate run-out more than 5.08 mm (0.20 in.).	1. Tighten or adjust. 2. Bleed and check for damage. 3. Repair. 4. Adjust the linkage or trim the pedal bumper. 5. Replace. 6. Replace. 7. Install correctly and lubricate. 8. Repair or replace the plate or clutch gear. 9. Replace.
Slipping	1. Linkage out of adjustment. 2. Driven plate friction pads worn or oil soaked. 3. Pressure plate or flywheel warped. 4. Diaphragm spring weak. 5. Driven plate overheated or not seated.	1. Adjust. 2. Replace. Check for leaks as needed. 3. Replace as needed. 4. Replace. 5. Allow to cool and make 30-40 normal starts — DO NOT OVERHEAT.
Grabbing (Chattering)	1. Engine mounts loose or damaged. 2. Driven plate friction pads oil soaked. 3. Pressure plate or flywheel warped. 4. Driven plate friction pad material burned or smeared onto the pressure plate or flywheel. 5. Clutch gear worn.	1. Tighten or replace. 2. Replace and check for leaks. 3. Replace as necessary. 4. Clean off or replace as needed. 5. Repair the transmission.
Rattling (Transmission Click)	1. Diaphragm spring weak. 2. Clutch fork loose or off the ball stud. 3. Driven plate springs weak or oil in the damper.	1. Replace the pressure plate. 2. Replace the retaining spring or install the fork correctly. 3. Replace and check for leaks as needed.
Release Bearing Noisy with the Clutch Engaged	1. Linkage out of adjustment. 2. Release bearing binding. 3. Clutch fork off the ball stud or loose spring tension. 4. Linkage return springs weak.	1. Adjust. 2. Clean, or replace if damaged, and lubricate. 3. Install, and lubricate. 4. Replace.
Noisy	1. Release bearing worn or damaged. 2. Clutch fork off the ball stud. 3. Pilot bearing loose.	1. Replace. 2. Install correctly and lubricate. 3. Replace. Refer to "Clutch Assembly and Pilot Bearing" in this section.
Pedal Stays on the Floor when Disengaged	1. Linkage or release bearing binding. 2. Diaphragm spring weak. 3. Return springs being over traveled.	1. Free up (or replace) and lubricate. 2. Replace the pressure plate. 3. Adjust the linkage or replace the pedal bumper if worn.
Pedal is Hard to Push	1. Linkage binding. 2. Hydraulic line blocked or crimped. 3. Master or secondary cylinders binding. 4. Driven plate worn.	1. Free up (or replace) and lubricate. 2. Clean out or replace. 3. Repair or replace as needed. 4. Replace.

GMTB-0146-2L

ON-VEHICLE SERVICE

HYDRAULIC CLUTCH PEDAL

Remove or Disconnect (Figure 1)

1. Negative battery cable.
2. Lower steering column covers.
3. Lower left side air conditioning duct (if used).
4. Neutral start switch.
5. Retainer (105) and the washer (106).
6. Pushrod (107) and the wave washer (108).
7. Nuts (100).
8. Braces (102 and 112).
9. Stud (101), pedal (109) and spring (103).
   - Slide a long screw or rod into the bracket while removing the stud.
10. Bushings (104) and the spacer (110).
11. Bumper (111) if it is worn or damaged.

Install or Connect (Figure 1)

1. New bumper (111) if needed.
2. New spacer (110) and new bushings (104).
   - Coat with grease before installing.
3. Spring (103), pedal (109) and stud (101).
   - Remove the long screw or rod while installing the stud.

Important

- The stud must be installed in the direction shown.

4. Braces (102 and 112).
5. Nuts (100).
6. New wave washer (108) and the pushrod (107).
   - The washer must stand off the pedal as shown.
7. Washer (106) and the retainer (105).
8. Neutral start switch.
9. Lower left side air conditioning duct, if used.
10. Lower steering column covers.
11. Negative battery cable.

- Lubricate the clutch pedal. Refer to MAINTENANCE AND LUBRICATION (SEC. 0B).

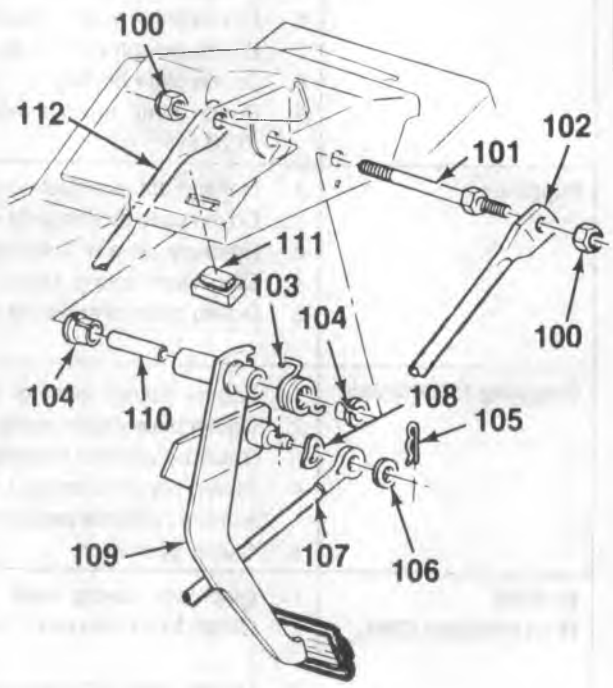

100. Nut
101. Stud
102. Outboard Brace
103. Spring
104. Bushing
105. Retainer
106. Washer
107. Pushrod
108. Wave Washer
109. Pedal
110. Spacer
111. Bumper
112. Inboard Brace

L00187

Figure 1—Hydraulic Clutch Pedal Components

MECHANICAL CLUTCH PEDAL

Remove or Disconnect (Figure 2)

1. Negative battery cable.
2. Cotter pin (132) and washer (131).
3. Wave washer (130).
4. Neutral start switch (125).
   - Note the direction the switch is mounted in.
5. Nut (120) and the spring washer (121).
6. Screw (133) and the washer (136).
   - Note the direction the screw is mounted in.
7. Washer (134) (if used).
8. Arm (135) and the wave washer (122).
9. Pedal rod (128) and the bushing (129).
10. Spring (127).
    - Push the pedal down, move it to the side and let it up to release the spring.
11. Pedal (126).
    - Slide a long screw or rod through the bracket while removing the pedal to keep the brake pedal in place.
12. Bushings (123).
13. Bumper (124) if it is worn or damaged.

Clean

- Metal parts with solvent. Wipe dry.
- Plastic and rubber parts with a dry rag.

Inspect (Figure 2)

- Pedal (126) for wear and bending.
- Bushings (123 and 129) for cracks and wear.

Install or Connect (Figure 2)

1. New bumper (124) if needed.
2. Bushings (123).
   - Coat the bushings with petroleum jelly.
3. Pedal (126).
   - Slide the screw or rod out while installing the pedal.
4. Spring (127).
   - Hold the pedal up, next to the pedal stop to hook the spring.
   - Push the pedal down, slide it to the side and set it up against the pedal stop.
5. Bushing (129) and the pedal rod (128).
6. New wave washer (122) and the arm (135).
7. Washer (134) (if used).
8. Washer (136) and the screw (133).
   - Install the screw in the direction from which it was removed.
9. New spring washer (121) and the nut (120).
10. Neutral start switch (125) in the position from which it was removed.
11. New wave washer (130).
12. Washer (131) and a new cotter pin (132).

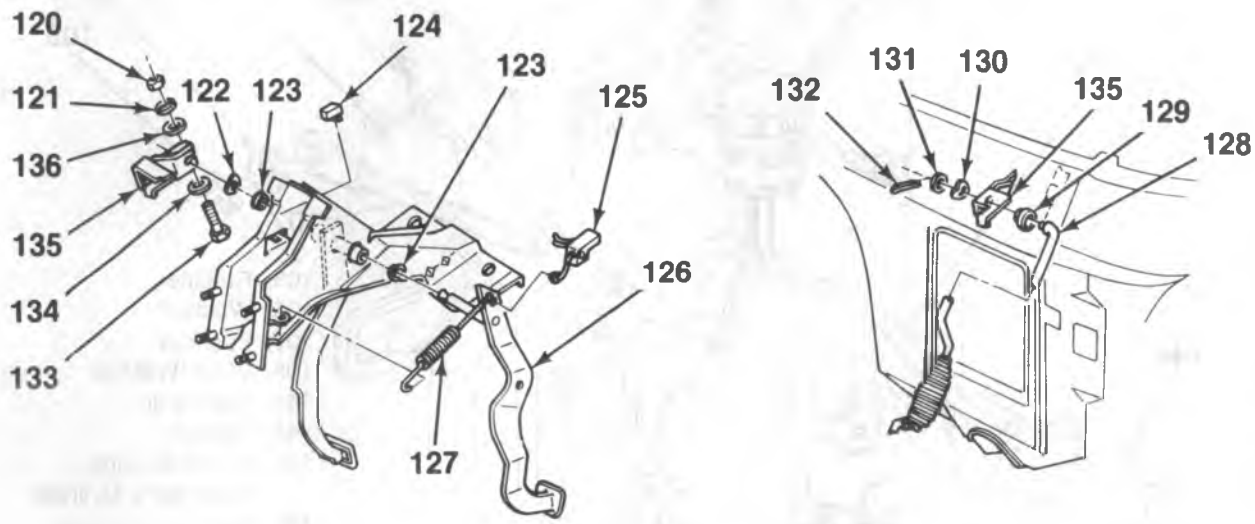

120. Nut
121. Spring Washer
122. Wave Washer
123. Bushing
124. Bumper
125. Neutral Start Switch
126. Pedal
127. Spring
128. Pedal Rod
129. Bushing
130. Wave Washer
131. Washer
132. Cotter Pin
133. Screw
134. Washer
135. Arm
136. Washer

B-08846

Figure 2—Mechanical Clutch Pedal Components

13. Negative battery cable.

- Adjust the clutch linkage. Refer to "Free Travel Adjustment" in this section.
- Lubricate the clutch pedal. Refer to MAINTENANCE AND LUBRICATION (SEC. 0B).

MASTER CYLINDER AND RESERVOIR

Remove or Disconnect (Figure 3)

1. Negative battery cable.
2. Lower steering column covers.
3. Lower left side air conditioning duct (if used).
4. Retainer (105) and washer (106).
5. Pushrod (107) and wave washer (108).
6. Reservoir hose (145).
7. Secondary cylinder hydraulic line (142) from the master cylinder (144).
8. Nuts (143) and the master cylinder (144).
9. Gasket (141).
   - Scrape all gasket material from the master cylinder and the cowl.
10. Screws (146) and the reservoir (140).

Install or Connect (Figure 3)

1. Reservoir (140) and screws (146).
2. New gasket (141).
3. Master cylinder (144) and nuts (143).
4. Secondary cylinder hydraulic line (142) to the master cylinder (144).
5. Reservoir hose (145).
6. New wave washer (108) and the pushrod (107).
7. Washer (106) and retainer (105).
8. Lower left side air conditioning duct, if used.
9. Lower steering column covers.
10. Negative battery cable.

- Fill the reservoir. Refer to "Specifications" in this section.
- Bleed the clutch system. Refer to "Hydraulic Clutch Bleeding" in this section.

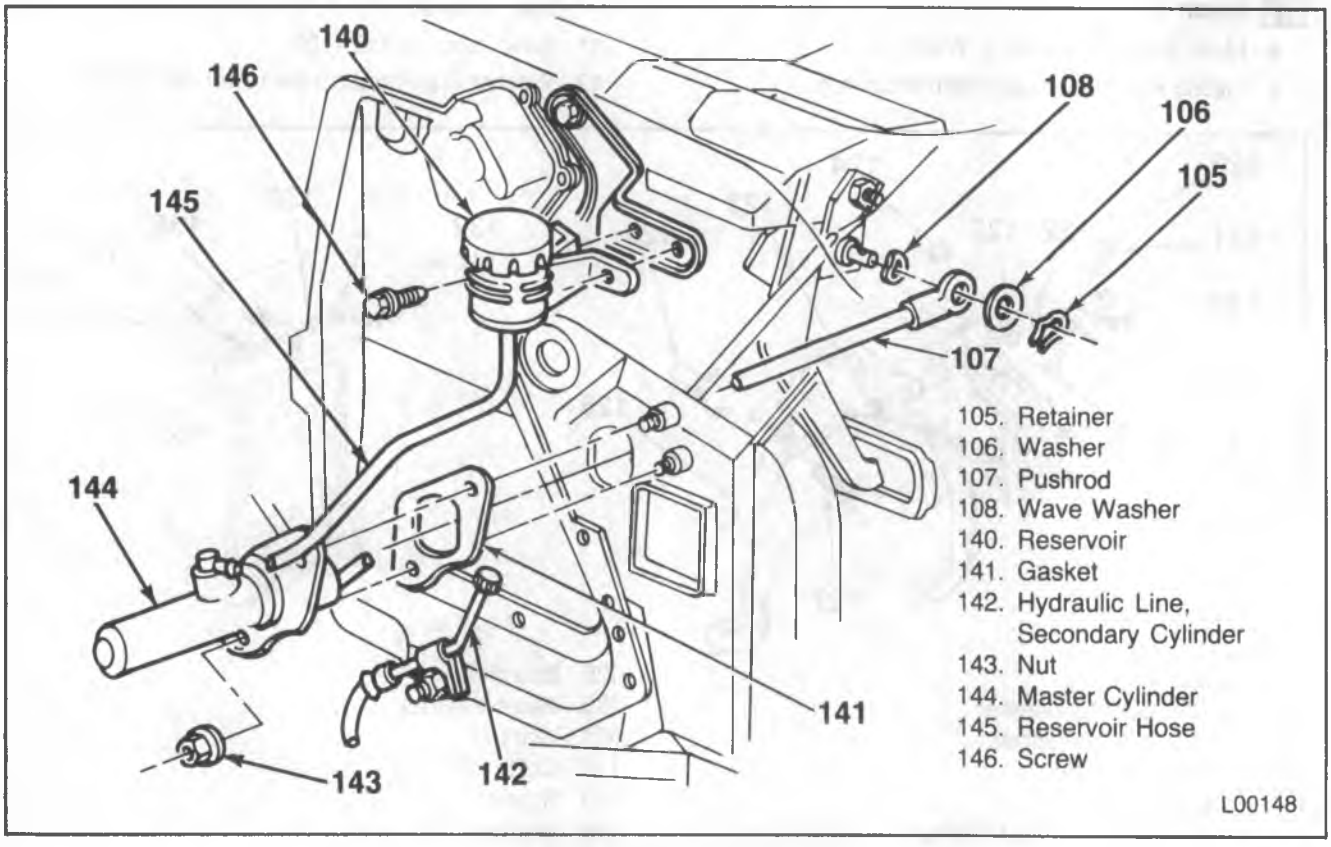

Figure 3—Master Cylinder and Reservoir

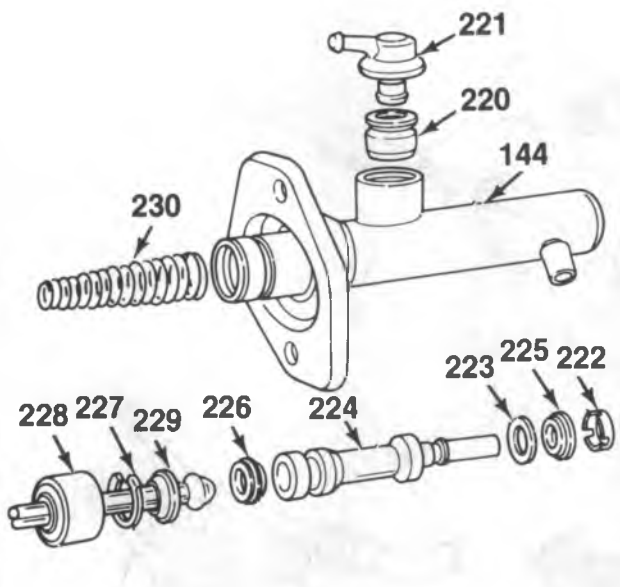

144. Master Cylinder
220. Seal
221. Adapter
222. Support
223. Shim
224. Plunger
225. Seal
226. Seal
227. Snap Ring
228. Dust Cover
229. Pushrod
230. Spring

B-08848

Figure 4—Master Cylinder Components

MASTER CYLINDER UNIT REPAIR

Remove or Disconnect (Figure 4)

1. Adapter (221) and seal (220).
2. Snap ring (227)
   - Pull the dust cover (228) back.
3. Pushrod (107) and plunger (224) by shaking them out.
4. Seal (226).
5. Spring (230), support (222), seal (225), and the shim (223).

Clean

- All parts in clean brake fluid.

Inspect

- Cylinder bore and plunger for scratches, ridges, and pitting.
- Dust cover for wear and cracking.

Install or Connect (Figure 4)

- Lubricate all seals with clean brake fluid.

1. Shim (223) and a new seal (225) with the flat against the shim (223).
2. Support (222) and the spring (230).
3. New seal (226).
4. Plunger (224) and the pushrod (107) in the cylinder bore.
   - Coat the cylinder bore with clean brake fluid.
5. Snap ring (227).
   - Push the pushrod in.
6. Dust cover (228).
   - Coat the inside of the dust cover with grease.
7. New seal (220) and adapter (221).

SECONDARY (SLAVE) CYLINDER AND HYDRAULIC LINE REPLACEMENT

Remove or Disconnect (Figure 5)

1. Negative battery cable.
   - Raise the vehicle.
2. Hydraulic line (142) from the secondary cylinder (153).
3. Nuts (151) and the secondary cylinder (153).
4. Hydraulic line (142) from the master cylinder (144).
5. Nut (150) and the hydraulic line (142).
   - Install the nut (150) to hold the speedometer cable (B) in place.

Important

- Cover all hydraulic line openings to keep dirt and moisture out of the components.

Install or Connect (Figure 5)

- Uncover the hydraulic line openings

1. Hydraulic line (142).
   - Remove the nut (150).
   - Hydraulic line (142) onto the master cylinder (144).
   - Hydraulic line (142) and the nut (150).

   Important

   - The hydraulic line must be upright, as shown.
2. Secondary cylinder (153) and the nuts (151).
3. Hydraulic line (142) onto the secondary cylinder (153).
   - Lower the vehicle.
4. Negative battery cable.

- Bleed the clutch system. Refer to "Hydraulic Clutch Bleeding" in this section.

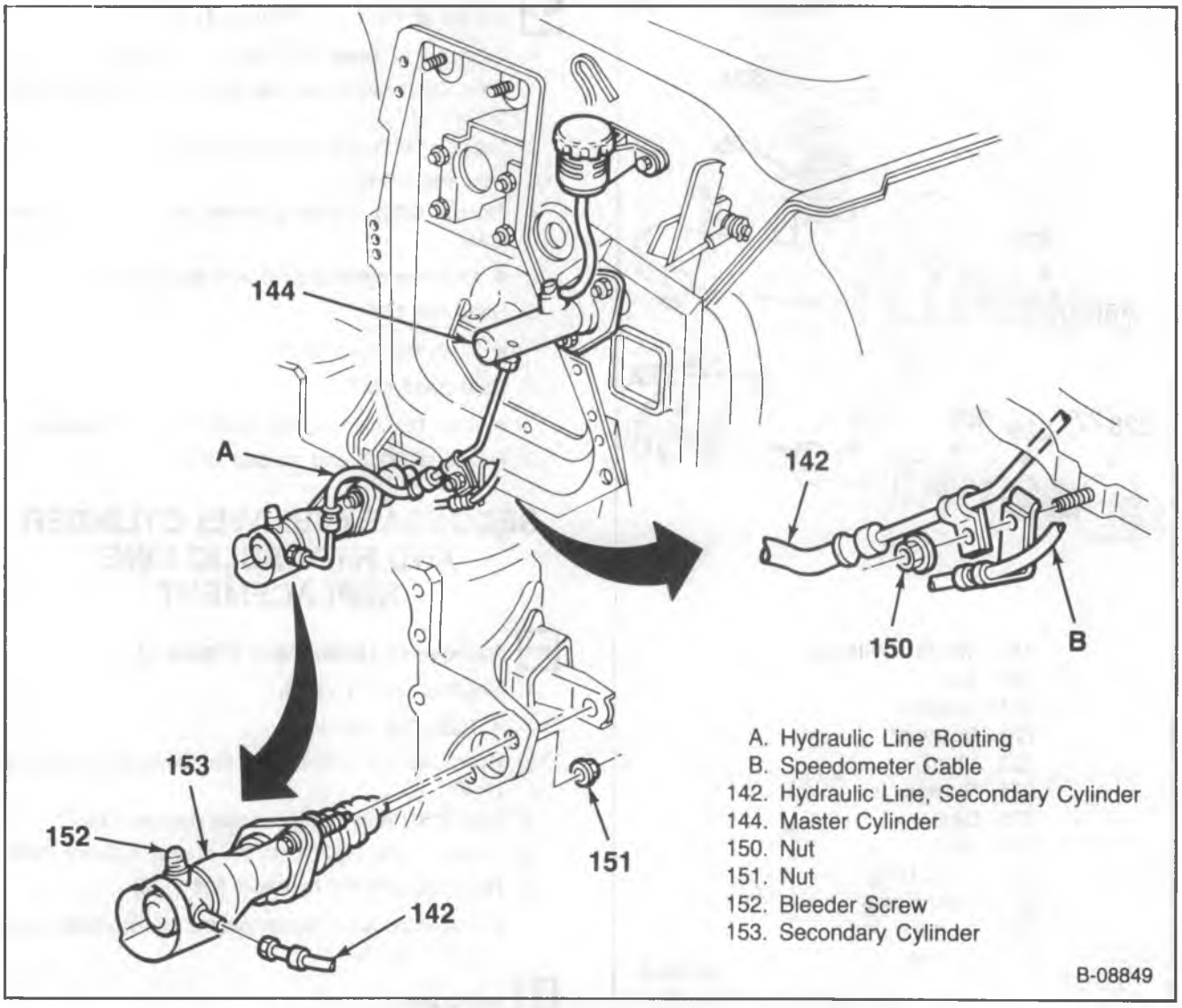

Figure 5—Secondary (Slave) Cylinder and Hydraulic Line

SECONDARY (SLAVE) CYLINDER UNIT REPAIR

Remove or Disconnect (Figure 6)

1. Pushrod (241) and the dust cover (240).
2. Snap ring (238) and shake the plunger (239) out.
3. Spring (242) and seal (237).

Clean

- All parts in clean brake fluid.

Inspect

- The cylinder bore and the plunger for scratches, ridges, and pitting.

Install or Connect (Figure 6)

1. New seal (237).
   - Coat the seal with clean brake fluid.
2. Spring (242).
3. Plunger (239).
   - Coat the cylinder bore with clean brake fluid.
4. Snap ring (238).
   - Push the plunger in.
5. Dust cover (240).
   - Coat the inside of the dust cover with grease.
6. Pushrod (241).

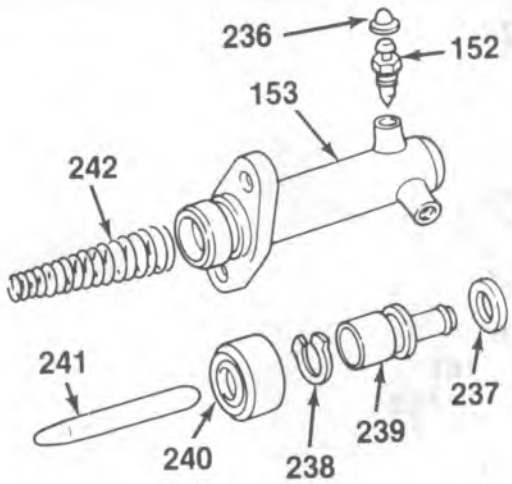

152. Bleeder Screw
153. Secondary Cylinder
236. Cap
237. Seal
238. Snap Ring
239. Plunger
240. Dust Cover
241. Pushrod
242. Spring

B-08850

Figure 6—Secondary (Slave) Cylinder Components

CLUTCH LINKAGE

Remove or Disconnect (Figure 7)

1. Negative battery cable.
2. Cotter pins (132), the washers (131) and the wave washers (130).
3. Pedal rod (128) and the bushing (129).
   - Note the direction the rod was removed from.
4. Screws (172) and the boot (171).
5. The lower pedal rod (163) (P-models only).
   - Cotter pins (160), washers (161), and wave washers (162).
6. The pull back spring (166).
7. Retaining spring (164) (if used).
8. Cotter pin (167), the washer (168) and the wave washer (169).
9. Nut (165) (if used).
10. Adjusting rod (170).
    - Note the direction from which the rod was removed.

Clean

- All metal parts with solvent. Wipe dry.
- All nylon and rubber parts with a clean, dry rag.

Inspect

- All metal parts for wear, damage and bending.
- All nylon and rubber parts for wear and cracks.

Install or Connect (Figure 7)

1. Adjusting rod (170).
   - Install the rod in the direction from which it was removed.
2. New wave washer (169), washer (168), and a new cotter pin (167).
3. Jam nut (165), (if used).
4. Pull back spring (166).
5. Retaining spring (164), (if used).
6. Lower pedal rod (163) (P-models only).
7. New wave washers (162), washers (161), and new cotter pins (160).
8. Boot (171) and screws (172).
   - The dimple must face the rear of the vehicle (P-models only).
9. Bushing (129) and pedal rod (128).
   - Install the rod in the direction from which it was removed.
10. New wave washers (130), washers (131), and new cotter pins (132).
11. Negative battery cable.

- Adjust the clutch, if needed. Refer to "Clutch Pedal Free Travel Adjustment" in this section.
- Lubricate the clutch linkage. Refer to MAINTENANCE AND LUBRICATION (SEC. 0B).

CROSS LEVER

Remove or Disconnect (Figure 8)

1. Negative battery cable.
2. Springs and the adjusting rod (170) (figure 7).
3. Pedal rod (128) or the lower pedal rod (163) (figure 7).
4. Screws (185) and spring washers (189).
5. Nuts (190) (P-models only).
6. Bracket (186) and cross lever (191).
7. Ball stud (181), nut (188), and star washer (187) from the bracket (186).
8. Engine side ball stud (181) if it is worn or damaged.

Clean

- All metal parts with solvent. Wipe dry.
- All nylon and plastic parts with a clean, dry rag.

Inspect

- All metal parts for wear, damage and bending.
- All nylon and plastic parts for wear and cracks.

Install or Connect (Figure 8)

1. Engine side ball stud (181) if needed.
2. New star washer (187), nut (188), and ball stud (181) onto the bracket (186).
3. Cross lever (191) and bracket (186).
4. New spring washers (189) and screws (185).
5. Nuts (190) (P-models only).

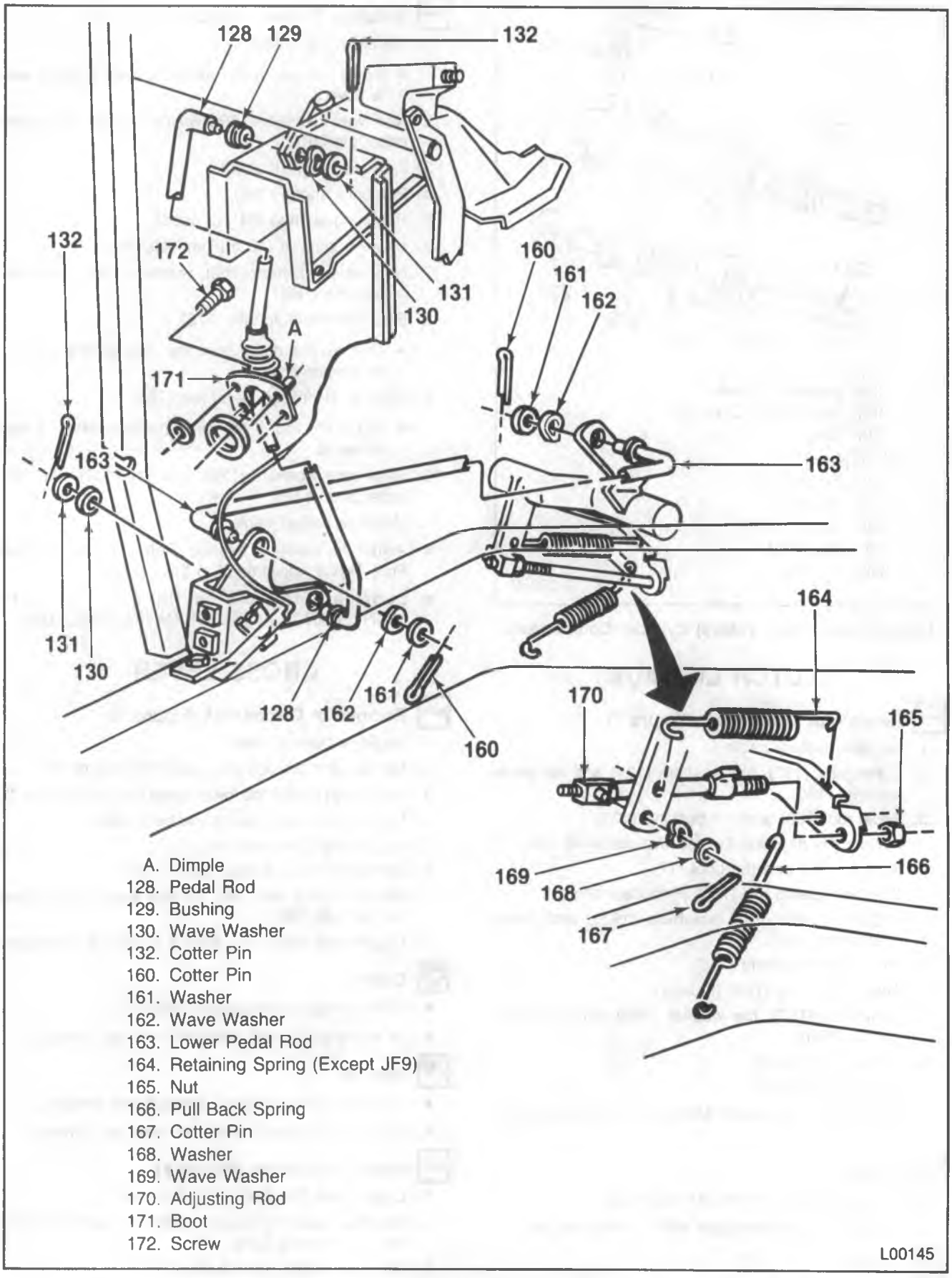

A. Dimple
128. Pedal Rod
129. Bushing
130. Wave Washer
132. Cotter Pin
160. Cotter Pin
161. Washer
162. Wave Washer
163. Lower Pedal Rod
164. Retaining Spring (Except JF9)
165. Nut
166. Pull Back Spring
167. Cotter Pin
168. Washer
169. Wave Washer
170. Adjusting Rod
171. Boot
172. Screw

Figure 7—Clutch Linkage—P-Models

6. Pedal rod (128) or lower pedal rod (163) (figure 7).
7. Adjusting rod (170) and springs (figure 7).

- Adjust the clutch linkage. Refer to "Clutch Pedal Free Travel Adjustment" in this section.
- Lubricate the clutch linkage. Refer to MAINTENANCE AND LUBRICATION (SEC. 0B).

HYDRAULIC CLUTCH BLEEDING

R/V MODELS

Bleed (Figures 3 and 5)

1. Fill the reservoir (140) with new DOT 3 brake fluid to the level of the diaphragm.

NOTICE: Never, under any circumstances, use fluid which has been bled from a system to fill the reservoir, as it may be aerated, have too much moisture content and possibly be contaminated.

2. Remove the secondary (slave) cylinder (153) and tip it so the bleeder screw (152) is up.
3. Hold the clutch pedal down, open the bleeder screw (152) to let air and fluid escape, and close the bleeder screw (152). Let the clutch pedal up.
4. Repeat step 3 until all air is out of the system.

Important

- Check and refill the reservoir as needed while bleeding so that air is not drawn into the system.

5. Install the secondary cylinder (153) and refill the reservoir (140) if needed.

CLUTCH PEDAL FREE TRAVEL ADJUSTMENT

P-MODELS

Adjust (Figures 7 and 9)

1. Remove the pull back spring (166).
2. Loosen the nut (201) at the swivel (202).
   - Take the swivel (202) out of the cross level (191), (models without JF9).
3. Move the clutch fork (200) back until the clutch spring pressure is felt, and adjust the rod length.

Models without JF9.

- Hold the clutch pedal against the bumper.
- Turn the nut (201) until the swivel (202) fits into the gage hole, then remove all lash.
- Install the swivel (202) with a new wave washer (169) and cotter pin (167).

Models with JF9.

- Hold the clutch pedal against the bumper.
- Loosen the nut (165) and turn the nut (203) until it is 7.37 mm (0.29-inch) from the rod shoulder.
- Tighten the nut (165) and turn the nut (201) to remove all lash.

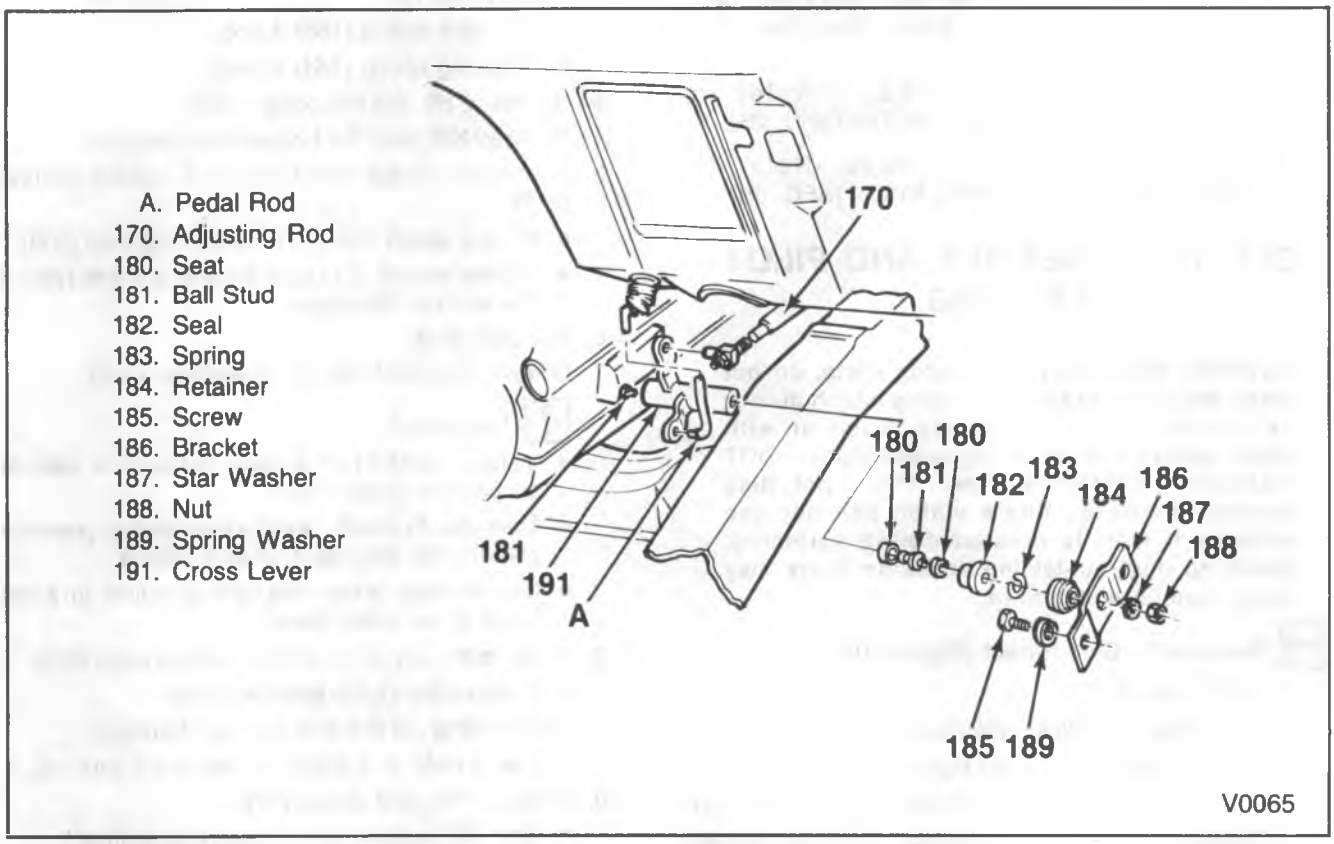

Figure 8—Cross Lever

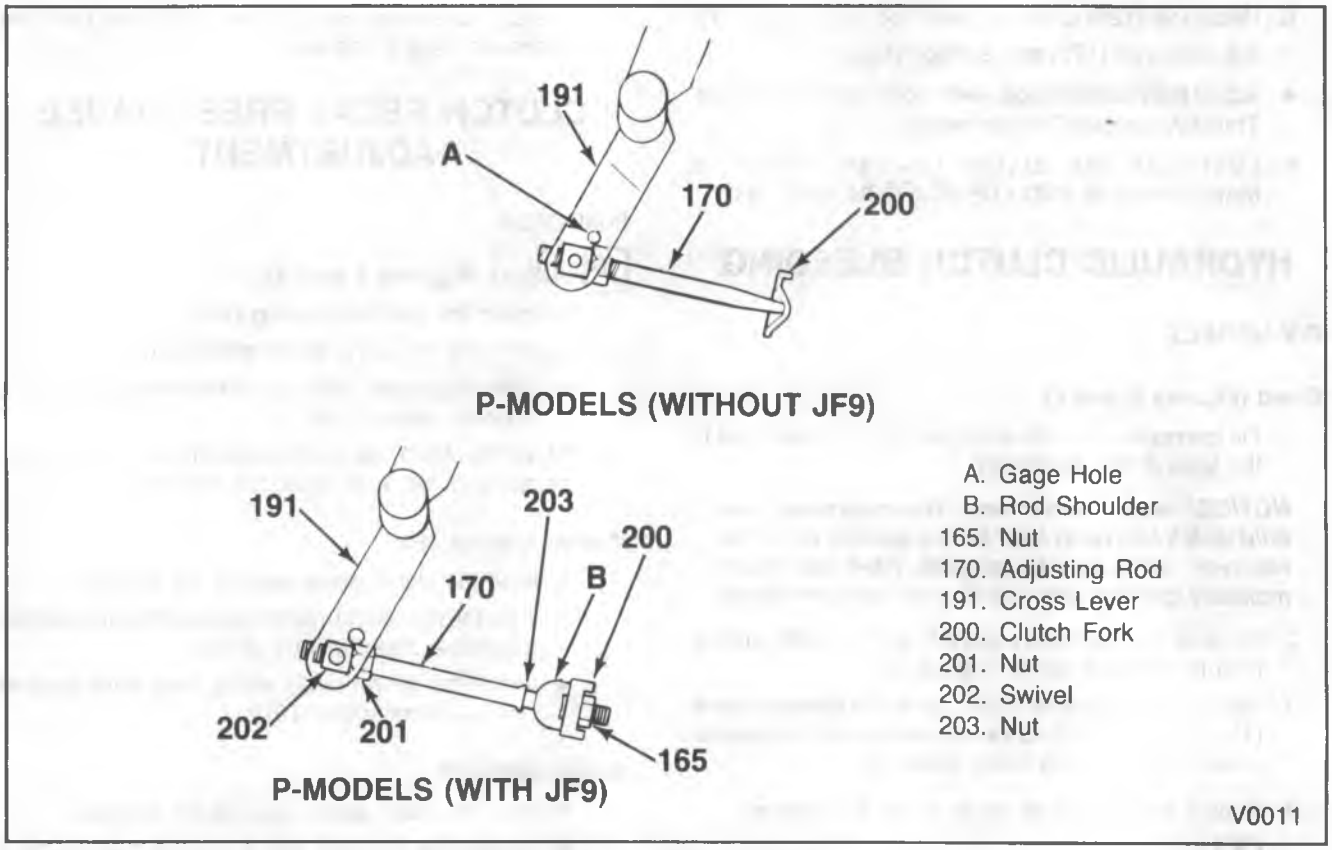

Figure 9—Clutch Linkage Adjustment

4. Install the pull back spring (166).
5. Check the clutch pedal free travel and re-adjust if needed. Refer to "Clutch Pedal Free Travel" in Specifications.
6. Lubricate the clutch linkage. Refer to MAINTENANCE AND LUBRICATION (SEC. 0B).
8. Lubricate the clutch linkage. Refer to MAINTENANCE AND LUBRICATION (SEC. 0B).

CLUTCH ASSEMBLY AND PILOT BEARING

CAUTION: When servicing clutch parts, do not create dust by grinding or sanding clutch disc or by cleaning parts with a dry brush or with compressed air. (A water dampened cloth — NOT SOAKED — should be used.) The clutch disc contains asbestos fibers which can become airborne if dust is created during servicing. Breathing dust containing asbestos fibers may cause serious bodily harm.

Remove or Disconnect (Figure 10)

Tools Required:

J 5824-01 Clutch Alignment Tool

J 1448 Pilot Bearing Puller (Gas Engine Only)

J 23907 Pilot Bearing Puller (6.2 L Diesel Only)

1. Transmission. Refer to MANUAL TRANSMISSION (SEC. 7B).
2. Adjusting rod (170) or the secondary cylinder (153), (figures 5 or 7).
   - Pull back spring (166) if used.
   - Retaining spring (164) if used.
3. Screws (216) and the cover (215).
4. Screws (208) and the flywheel housing (207).
5. Boot (210), clutch fork (200) and release bearing (212).
   - Pry the clutch fork (200) off the ball stud (209).
   - Pry the retainer (211) out of the clutch fork (200) if it is worn or damaged.
6. Ball stud (209).
7. Screws (206) and the spring washers (205).

Important

- Install J 5824-01 or a used clutch drive gear to support the clutch (figure 11).
- Mark the flywheel, clutch cover and a pressure plate lug for alignment when installing.
- Loosen each screw one turn at a time to avoid warping the clutch cover.

8. Cover assembly (213) and the driven plate (214).
   - Remove the clutch alignment tool.
9. Pilot bearing (217) if it is worn or damaged.
   - Use J 1448 or J 23907 as needed (figure 13).
10. Screws (218) and straps (219).
    - Note the location of the retracting springs.
11. Pressure plate (220).

Clean (Figure 10)

- All parts with a clean, water dampened cloth to remove any asbestos fibers.
- Clutch fork (200), the flywheel housing (207) and the ball stud (209) with solvent. Wipe dry.

NOTICE: The release bearing is permanently packed with lubricant and should not be soaked in cleaning solvent as this will dissolve the lubricant.

Inspect (Figure 10)

- All parts for wear and damage.
- Contact surfaces for scoring, and flatness with a straight edge. Driven plate run-out must not be more than 5.08 mm (0.20-inch).
- Friction pads for scoring, gouges, and loose rivets. Check to see if they are oil soaked.
- All splines for nicks, burrs and sliding fit.
- All springs for bending and breaks.
- Boot for tears and brittleness.

Measure (Figure 10)

- Transmission pilot hole in the clutch housing for run out using a dial indicator. Run out should not be more than 0.380 mm (0.015-inch).

Install or Connect (Figure 10)

Tools Required:

J 5824-01 Clutch Alignment Tool

J 1522 Pilot Bearing Driver (Gas Engine Only)

J 34140 Pilot Bearing Driver (6.2L Diesel Only)

1. Pressure plate (220).

Important

- Line up the marks made during removal.

2. Straps (219) and screws (218).
   - Install the retracting springs in the positions from which they were removed.
3. New pilot bearing (217) if needed. Use J 1522 or J 34140 as needed to drive the bearing in until the tool bottoms out (figure 13).
   - **Gas Engine**

     Lubricate the bearing with a few drops of machine oil.
   - **6.2 L Diesel Engine**

     The bearing is sealed and does not need any lubrication.
4. Driven plate (214) and cover assembly (213).

Important

- Install J 5824-01 clutch alignment tool or a used clutch drive gear to support the clutch.
- Align the marks made during removal.

5. New spring washers (205) and screws (206).
   - Remove the clutch alignment tool.

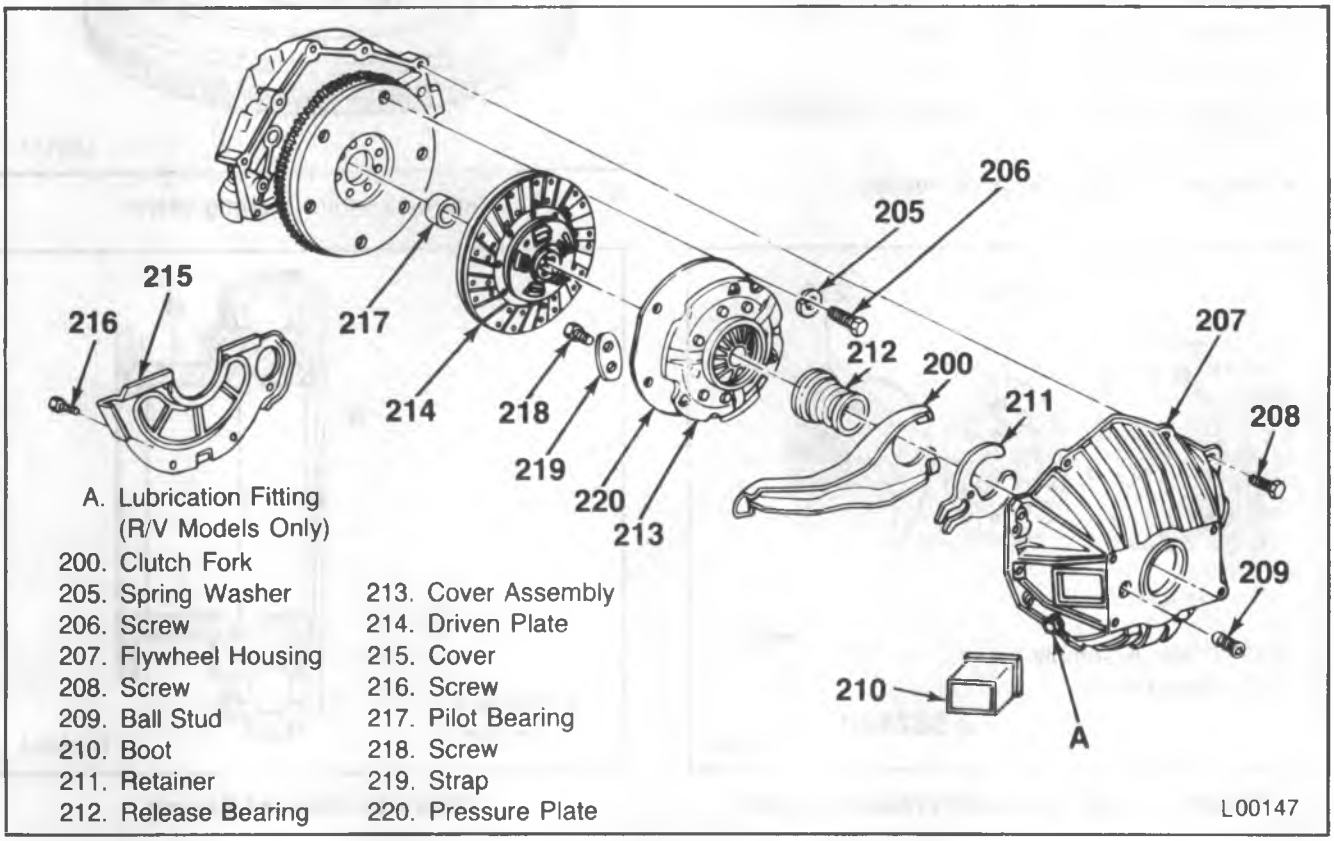

A. Lubrication Fitting (R/V Models Only)
200. Clutch Fork
205. Spring Washer
206. Screw
207. Flywheel Housing
208. Screw
209. Ball Stud
210. Boot
211. Retainer
212. Release Bearing
213. Cover Assembly
214. Driven Plate
215. Cover
216. Screw
217. Pilot Bearing
218. Screw
219. Strap
220. Pressure Plate

Figure 10—Clutch Assembly and Pilot Bearing

Important

- Tighten each screw one turn at a time to avoid warping the clutch cover.

NOTICE: Be careful not to use too much lubricant. Excessive lubricant may get on clutch fingers and cause slippage or damage to the clutch.

6. Ball stud (209).
   - Pack the seat with high temperature grease.
   - Coat the rounded end of the ball stud (209) with high temperature grease.
- Pack the ball stud seat from the lubrication fitting (A) on the flywheel housing (207) (R/V models only).
7. New retainer (211) if needed.
   - The retainer must be installed so the fingers and tabs fit into the release bearing groove and the retainer wraps around the flat side of the ball stud head.
8. Release bearing (212), the clutch fork (200) and the boot (210).
   - Pack the inside recess and the outside groove of the release bearing (212) with high temperature grease as shown (figure 14).
9. Flywheel housing (207) and screws (216).
10. Cover (215) and screws (216).
11. Adjusting rod (170) or secondary cylinder (153) as needed (figures 5 or 7).
12. Retaining spring (164) (if used).
13. Pull back spring (166) (if used).
14. Transmission. Refer to MANUAL TRANSMISSION (SEC. 7B).
- Adjust the clutch linkage as needed.

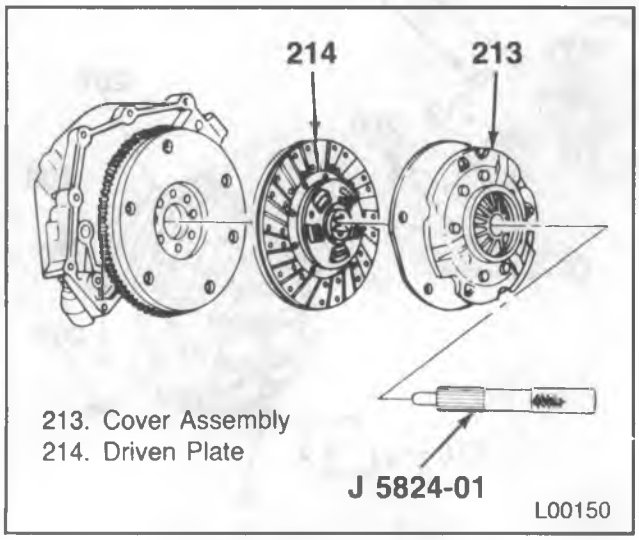

Figure 11—Installing Clutch Alignment Tool

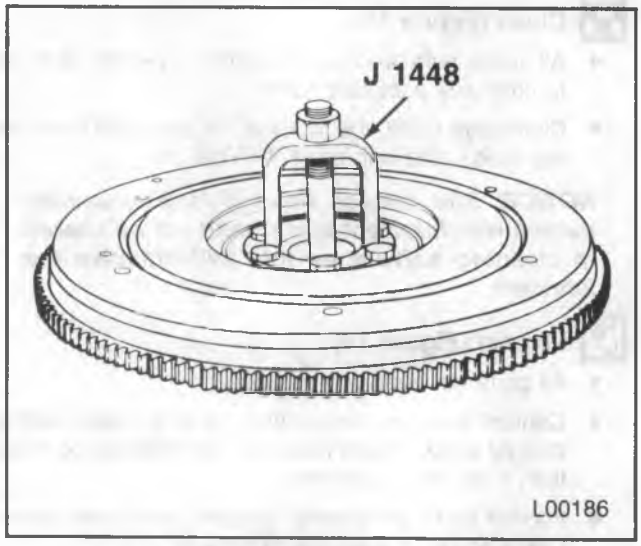

Figure 12—Removing the Pilot Bearing

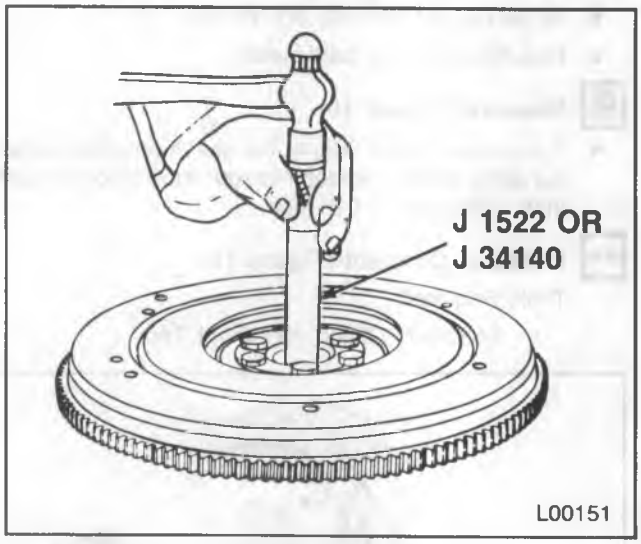

Figure 13—Pilot Bearing Driver

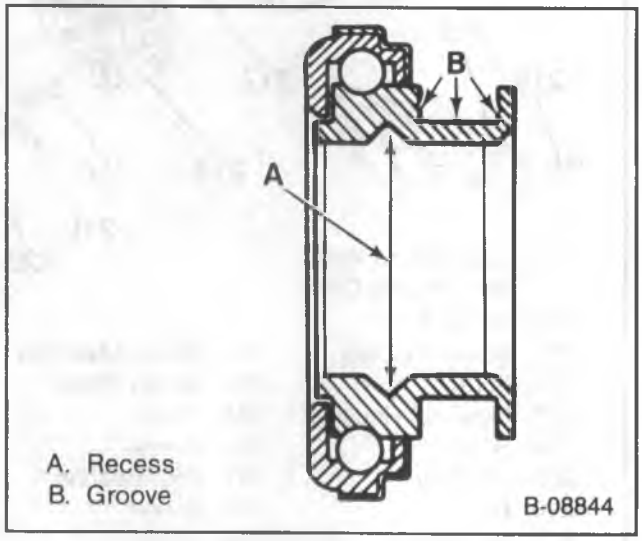

Figure 14—Release Bearing

SPECIFICATIONS

FASTENER TORQUE

Fastener Torque	N•m	Ft. Lbs.
Flywheel Housing to Engine	54	40
Clutch Pedal Stud	39	29
Master Cylinder	18	13
Secondary (Slave) Cylinder	18	13
Cross Lever Ball Stud		
— Bracket Side	27	20
— Engine Side (P-Models)	46	34
— Adjusting Rod Swivel (P-Models)	27	20

Clutch Pedal Free Travel	mm	Inches
P-Models (Without JF9)	34	1.375
P-Models (With JF9)	38	1.5

Lubrication	
Hydraulic Clutch	
Capacity	Fill to Level of Diaphragm
Type Recommended	Brake Fluid Meeting DOT 3

GMTB-3006-2A

SPECIAL TOOLS

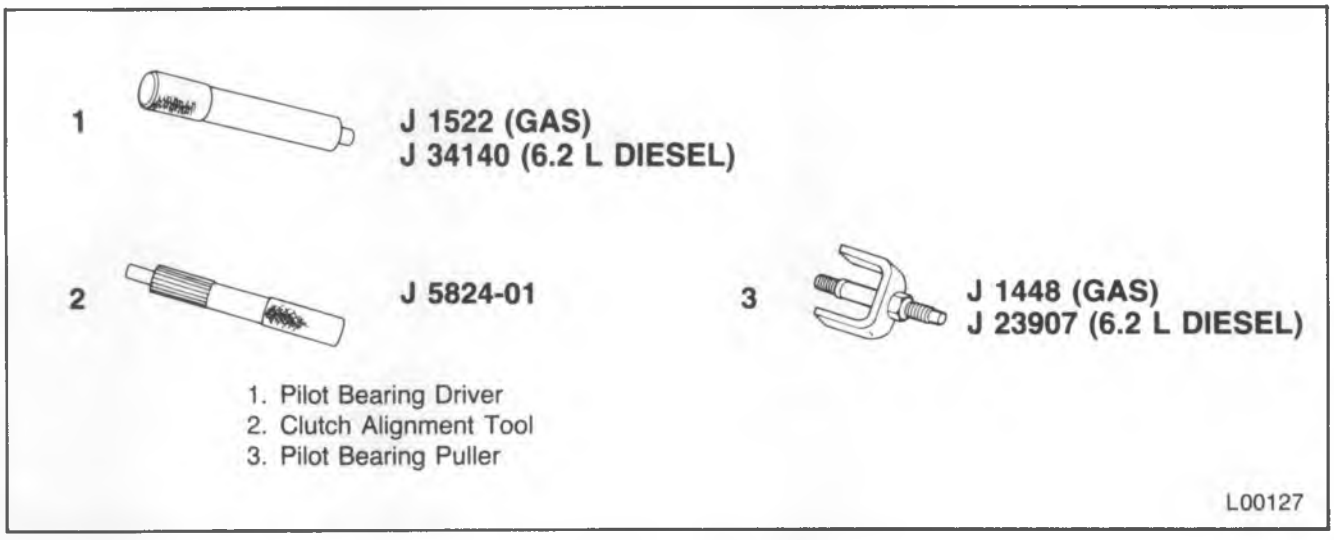

Figure 15—Special Tools

SECTION 7D

TRANSFER CASE

NOTICE: When fasteners are removed, always reinstall them at the same location from which they were removed. If a fastener needs to be replaced, use the correct part number fastener for that application. If the correct part number fastener is not available, a fastener of equal size and strength (or stronger) may be used. Fasteners that are not reused, and those requiring thread locking compound will be called out. The correct torque value must be used when installing fasteners that require it. If the above conditions are not followed, parts or system damage could result.

CONTENTS

SUBJECT	PAGE
Description	7D- 1
Operation	7D- 1
Identification	7D- 2
Diagnosis	7D- 3
On-Vehicle Service	7D- 4
Transfer Case Oil Change	7D- 4
Transfer Case Linkage Adjustment	7D- 4
Skid Plate Replacement	7D- 5
Shift Lever Replacement	7D- 5
Vent Hose Replacement	7D- 7
Transfer Case Output Shaft Seal Replacement	7D- 7
Rear Extension Housing and Pump Retainer Housing Replacement (NP 241 Transfer Case)	7D- 9
Transfer Case Replacement	7D-10
Transfer Case Adapter Replacement	7D-10
Specifications	7D-13
Special Tools	7D-14

DESCRIPTION

The transfer case is used to provide a means of providing power flow to the front axle. The transfer case also provides a means of disconnecting the front axle, providing better fuel economy and quieter operation when the vehicle is driven on improved roads where four wheel drive is not required. In addition, the transfer case provides an additional gear reduction when placed in low range, which is useful when difficult off-road conditions are encountered.

A New Process Model 241 transfer case is used on V10/15 and V20/25 models. The V30/35 Model uses a New Process Model 205 transfer case.

The Model 241 transfer case is an aluminum case, chain driven unit with four modes of operation: neutral, two wheel drive high range, four wheel drive high range, and four wheel drive low range. Gear reduction for low range is provided by a planetary gear set.

The Model 205 transfer case is a cast iron, gear driven unit with four modes of operation: neutral, two wheel drive high range, four wheel drive high range, and four wheel drive low range. Gear reduction for low range is provided by planetary sliding clutches and reduction gears.

OPERATION

2 WHEEL DRIVE OPERATION (NP 241 TRANSFER CASE)

When the transfer case is in "2 wheel" range, torque flows from the input gear to the range shift hub and main shaft, through the propeller shaft, to the rear axle.

FOUR WHEEL DRIVE HIGH RANGE OPERATION (NP 241 TRANSFER CASE)

Shifting into "4 HIGH" range causes the following to happen:

1. Torque flows from the input gear to the mainshaft the same as in "2 wheel" position. The shift linkage moves the mode synchronizer sleeve into engagement with the clutch teeth of the drive sprocket. This locks the drive sprocket to the mainshaft through the synchronizer sleeve.
2. Torque is transmitted through the drive sprocket and drive chain to the driven sprocket and output shaft. Torque then flows through the front propeller shaft to the front axle.

FOUR WHEEL DRIVE LOW RANGE OPERATION (NP 241 TRANSFER CASE)

When the transfer case is shifted into "4 low" position, torque flow and operation is similar to "4 high" range, except that the range shift hub engages the planetary carrier. The planetary gear set then provides a gear reduction to both the front and rear axles.

OPERATION (NP 205 TRANSFER CASE)

The NP 205 transfer case is similar in operation to the NP 241, except the sliding clutches provide engagement for the drive and reduction gears.

IDENTIFICATION

MODEL NP 241 (Figure 1)

An identification tag is attached to the rear case half. The tag provides the transfer case model number, low range reduction ratio and assembly part number.

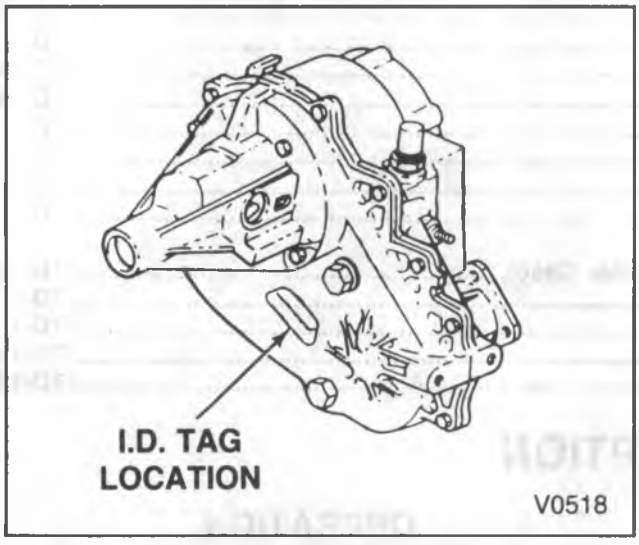

Figure 1—NP241 Identification Tag Location

MODEL NP 205 (Figure 2)

An identification tag is attached to a bolt retaining the PTO cover. The tag provides the transfer case model number, low range reduction ratio and assembly part number.

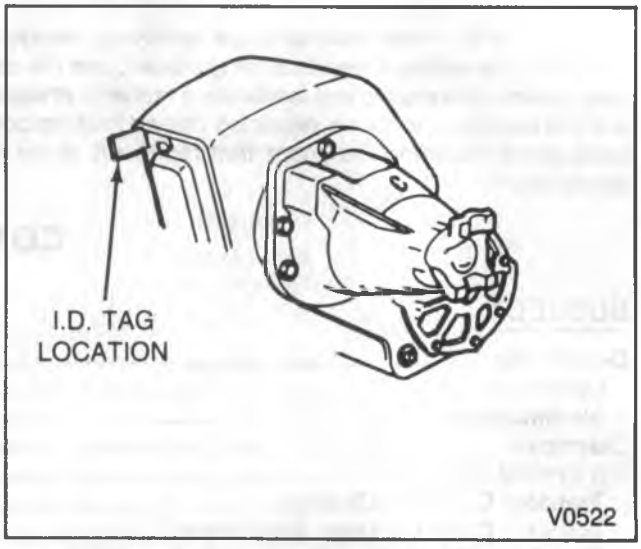

Figure 2—NP 205 Identification Tag Location

DIAGNOSIS

PROBLEM	POSSIBLE CAUSE	CORRECTION
Four Wheel Drive Does Not Engage	1. Transfer case linkage improperly adjusted or disconnected. 2. Faulty transfer case: Drive chain broken, range selector ring broken, etc. 3. Faulty front axle.	1. Adjust or repair. 2. Repair. Refer to the Light Duty Truck Unit Repair Manual. 3. Refer to FRONT DRIVING AXLE (SEC. 4C).
Four Wheel Drive Will Not Disengage	1. Transfer case linkage binding or improperly adjusted. 2. Faulty front axle shift mechanism.	1. Adjust or repair. 2. Repair.
Jumps Out of Four Wheel Drive	1. Transfer case linkage binding or improperly adjusted. 2. Worn or damaged engine or transmission mountings. 3. Transfer case mounting bolts loose. 4. Drive shaft slip splines dry or loose. 5. Transfer case or front axle internal problem.	1. Adjust or repair. 2. Replace. 3. Tighten. 4. Lubricate or replace. 5. Repair.
Transfer Case Shift Lever Difficult To Shift Or Will Not Shift Into 4 LOW or NEUTRAL (Vehicle Moving)	Vehicle is in motion.	Stop the vehicle when shifting into or out of 4L or N.
Transfer Case Difficult to Shift.	1. In extremely cold weather, it may be necessary to reduce vehicle speed or stop before shift from 2 Wheel to 4 High. 2. If the vehicle has been operated for an extended period in 4 HIGH mode on dry pavement, difficult shifting may result due to driveline torque lock. Stop the vehicle, shift transmission to neutral and shift transfer case into desired mode. 3. Transfer case linkage binding. 4. Low transfer case lube level, or improper lubricant used. 5. Internal transfer case problem.	1. None required. 2. Operate the vehicle in 2 WHEEL mode on dry pavement. Oversize under-inflated tires may also cause torque lock. 3. Adjust or repair. 4. Fill with proper lubricant. 5. Repair. Refer to the Light Duty Truck Unit Repair Manual.
Transfer Case Noisy In All Modes	1. Low lube level, or improper lubricant used. 2. Worn, under-inflated or oversize tires. 3. Internal transfer case problem.	1. Fill with proper lubricant. 2. Replace or inflate. 3. Repair. Refer to the Light Duty Truck Unit Repair Manual.

TB-3205-2A

DIAGNOSIS (CONT.)

PROBLEM	POSSIBLE CAUSE	CORRECTION
Noisy in Or Jumps Out Of 4 Low Range	1. Transfer case not completely engaged in 4 LOW range. 2. Shift linkage loose or binding. 3. Transfer case internal shift mechanism faulty.	1. Stop vehicle, shift into NEUTRAL, then back to 4 LOW. 2. Repair. 3. Repair.
Lubricant Leaking From Transfer Case Vent	1. Transfer case overfilled.	1. Drain lubricant to proper level.
Lubricant Leak At Output Shaft Seals	1. Transfer case overfilled. 2. Vent hose plugged or kinked. 3. Output shaft seals damaged or incorrectly installed.	1. Drain lubricant to proper level. 2. Repair. 3. Replace.
Abnormal Front Tire Wear	1. Front end needs alignment. 2. Extended operation on hard, dry surfaces in 4 HIGH mode.	1. Align to specifications. 2. Operate vehicle in 2 WHEEL mode on hard, dry surfaces.

TB-3206-2A

ON-VEHICLE SERVICE

TRANSFER CASE OIL CHANGE

Remove or Disconnect

- Raise the vehicle. Support with suitable safety stands.
- Place a drain pan under the drain plug.

1. Drain plug. Allow the oil to drain.
2. Fill plug.

Install or Connect

1. Drain plug. Tighten to specifications.
   - — V10/15 and V20/25 models: 47 N•m (35 ft. lbs.).
   - — V30/35 models: 42 N•m (31 ft. lbs.).
2. Oil as described in MAINTENANCE AND LUBRICATION (SEC. 0B) in this manual. Fill the transfer case until the oil level is at the bottom of the filler plug hole.
3. Fill plug. Tighten to specifications.
   - — V10/15 and V20/25 models: 47 N•m (35 ft. lbs.).
   - — V30/35 models: 42 N•m (31 ft. lbs.).

- Lower the vehicle.

TRANSFER CASE LINKAGE ADJUSTMENT

V30/35 MODELS

No adjustment is necessary (Figure 3). No provisions for adjustment are provided.

V10/15 AND V20/25 MODELS

Refer to figures 4 and 5.

1. Place the lever (23) in the "4 High" position.
2. Push the lever (26) forward into the "4 High" position.
3. Install the swivel (43) into the lever (26).
4. Hang a 5.19 mm (0.20-inch) gage over the rod behind the swivel, as shown.
5. Position the nut (27) against the gage with the shifter against the 4 high detent.
6. Remove the gage. Push the swivel against the nut (27).
7. Tighten the nut (49).

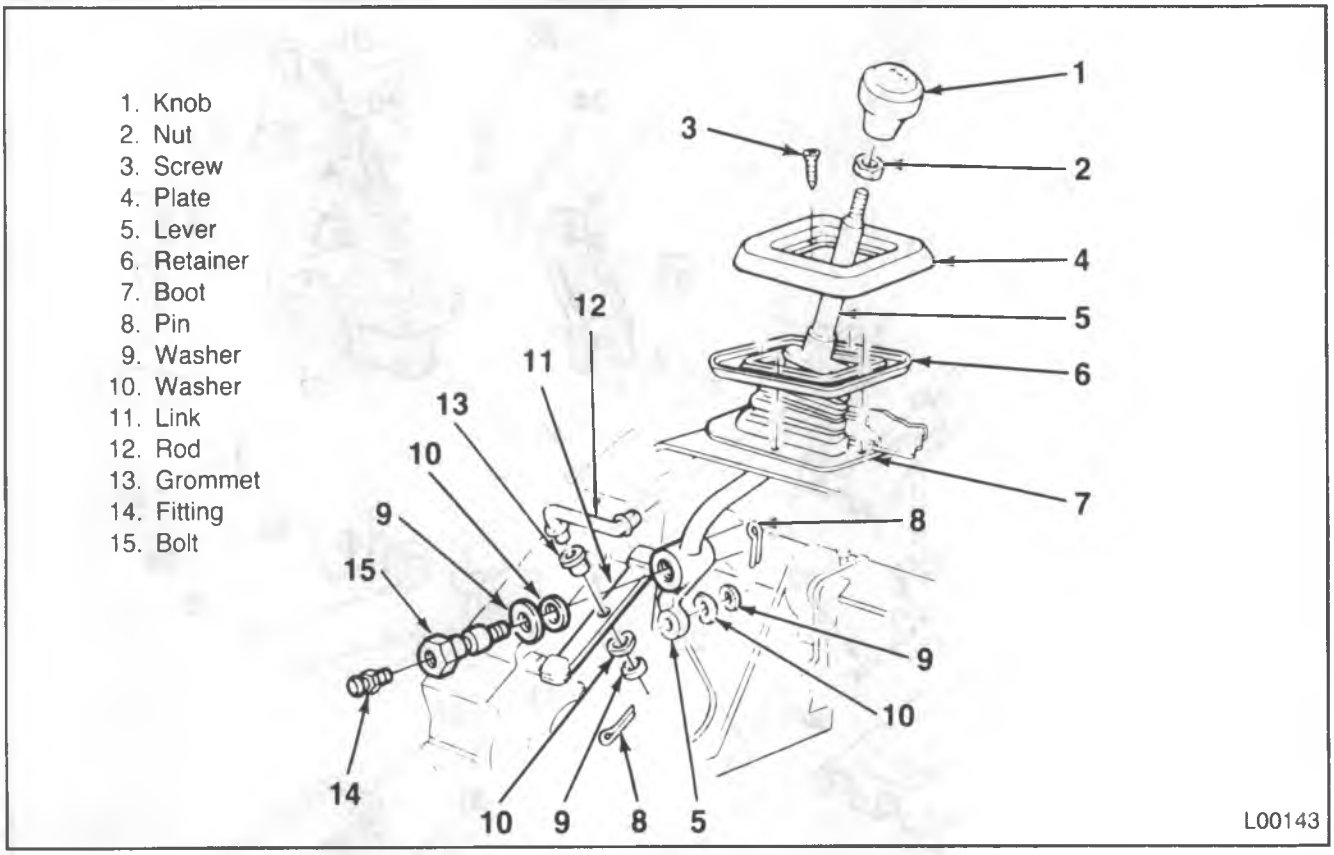

Figure 3—Transfer Case Linkage (V30/35 Models)

SKID PLATE REPLACEMENT

Remove or Disconnect (Figure 6)

1. Bolts and nuts.
2. Skid plate.

Install or Connect (Figure 6)

1. Skid plate.

NOTICE: See "Notice" on page 7D-1 of this section.

2. Bolts and nuts.

Tighten

- Nuts to 24 N•m (18 ft. lbs.).

SHIFT LEVER REPLACEMENT

V10/15 AND V20/25 MODELS

Remove or Disconnect (Figures 4 and 5)

1. Shift knob (20).
2. Screws (29).
3. Console (30).
4. Screws (50).

- Raise the vehicle. Support with suitable safety stands.

5. Swivel (43) from the shift lever (23).

- Lower the vehicle.

6. Shift lever assembly.
7. Nut (33) and washer (34).
8. Lever (26).

Install or Connect (Figures 4 and 5)

1. Lever (26) to the housing (36).
2. Nut (33) and washer (34).
3. Shift lever assembly to the vehicle.
4. Screws (50).
5. Console (30).
6. Screws (29).
7. Shift knob (20).

- Raise the vehicle. Support with suitable safety stands.

8. Swivel (43) to the shift lever (23).

Adjust

- Transfer case linkage, as outlined previously.

- Lower the vehicle.

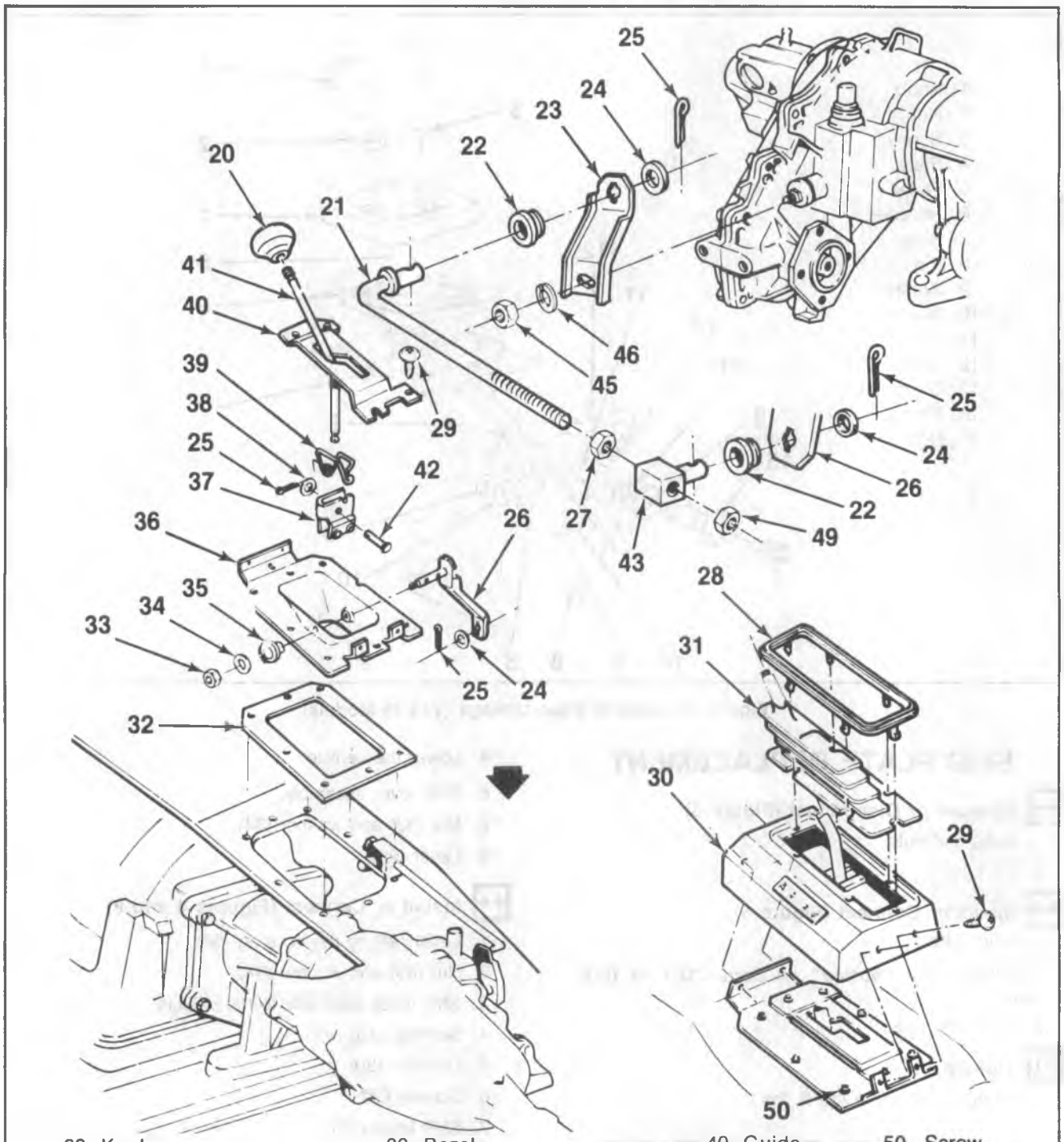

20. Knob
21. Rod
22. Grommet
23. Lever
24. Washer
25. Pin
26. Lever
27. Nut
28. Plate
29. Screw
30. Bezel
31. Boot
32. Seal
33. Nut
34. Washer
35. Bushing
36. Housing
37. Fork
38. Washer
39. Spring
40. Guide
41. Lever
42. Pin
43. Swivel
44. Bolt
45. Nut
46. Washer
47. Bolt
48. Nut
49. Nut
50. Screw

F6358

Figure 4—Transfer Case Linkage (V10/15 and 20/25 Models)

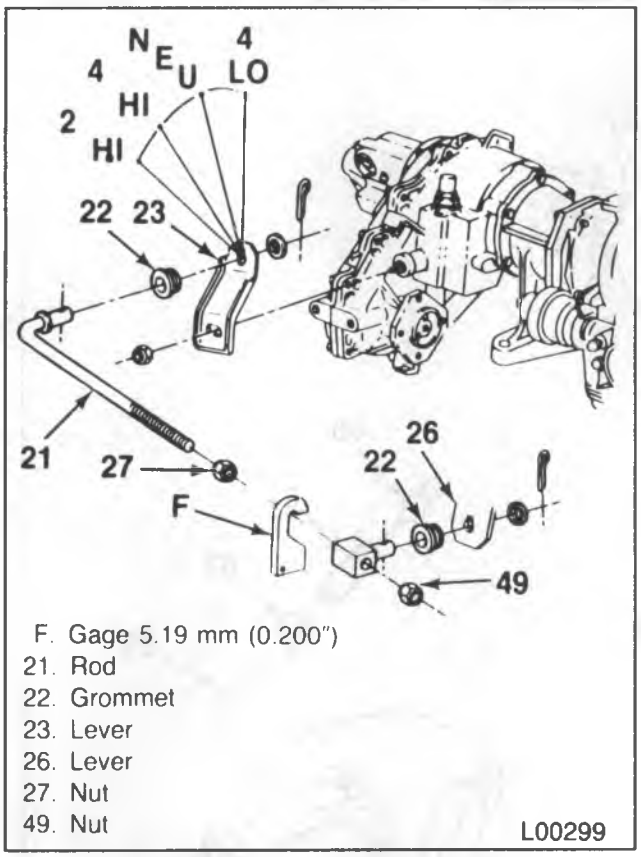

Figure 5 – Linkage Adjustment (V10/15 and V20/25 Models)

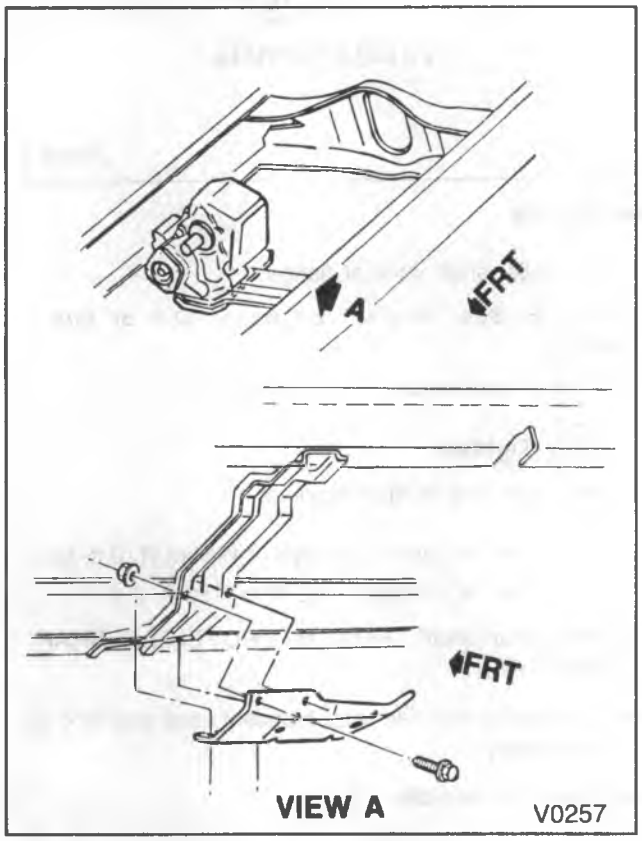

Figure 6 – Skid Plate

V30/35 MODELS

Remove or Disconnect (Figure 3)

1. Knob (1) and nut (2).
2. Screws (3).
3. Plate (4).
4. Retainer (6).
5. Boot (7).

- Raise the vehicle. Support with suitable safety stands.

6. Cotter pin (8), and washers (9 and 10).
7. Rod (12) from the lever (5).
8. Bolt (15) and flat washers (9 and 10).
9. Lever.

Install or Connect (Figure 3)

1. Lever (5).

NOTICE: See "Notice" on page 7D-1 of this section.

2. Bolt (15) and flat washers (9 and 10).

Tighten

- Bolt to 135 N•m (100 ft. lbs.).

3. Rod (12) to the lever (5).
4. Cotter pin (8), and washers (9 and 10).

- Apply chassis lubricant to the grease fitting (14).
- Lower the vehicle.

5. Boot (7).
6. Retainer (6).
7. Plate (4).
8. Screws (3).
9. Nut (2) and knob (1).

VENT HOSE REPLACEMENT

When replacing the vent hose, be sure to route it as shown in figure 7. The installed hose must be free of kinks.

TRANSFER CASE OUTPUT SHAFT SEAL REPLACEMENT

This procedure applies to front and rear output shaft seals.

Remove or Disconnect

- Raise the vehicle. Support with suitable safety stands.

1. Front or rear propeller shaft. Refer to PROPELLER SHAFT (SEC. 4A).
2. Propeller shaft yoke or flange.
3. Output shaft seal. Pry out with a screwdriver. Take care not to damage the seal bore.

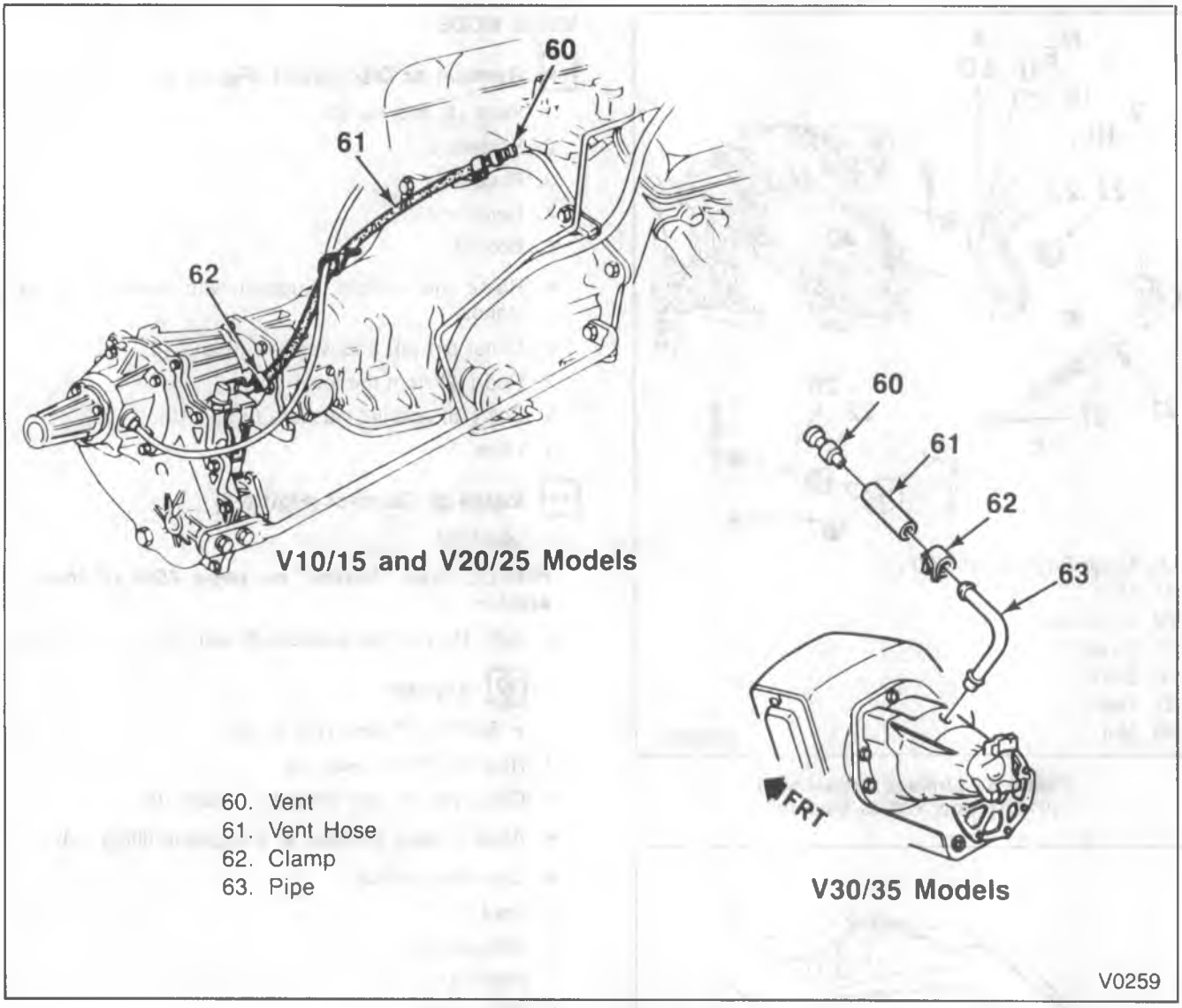

Figure 7—Vent Hose Routing

Install or Connect (Figure 8)

Tools Required:

J29162 Front Output Shaft Seal Installer (NP 241 Transfer Case)

J33843 Rear Output Shaft Seal Installer (NP 241 Transfer Case)

OR

J22836 Front Output Shaft Seal Installer (NP 205 Transfer Case)

J21359 Rear Output Shaft Seal Installer (NP 205 Transfer Case)

1. Seal.
   - Lubricate the seal lips with ATF or petroleum jelly.
   - Install the seal using the proper tool (figure 8).
     - NP 241 transfer case (V10/15 and V20/25 models): Use J29162 (front seal) or J33843 (rear seal).
     - NP 205 transfer case (V30/35 models): Use J22836 (front seal) or J21359 (rear seal).
2. Propeller shaft yoke or flange.

NOTICE: See "Notice" on page 7D-1 of this section.

3. Flange washer and nut (if used).

Tighten

- Flange nut to specifications.
  - V1 and V2 models: 149 N•m (110 ft. lbs.).
  - V3 models: 202 N•m (150 ft. lbs.).
4. Propeller shaft. Refer to PROPELLER SHAFT (SEC. 4A).

- Check the transfer case lubricant level and add as necessary.
- Lower the vehicle.

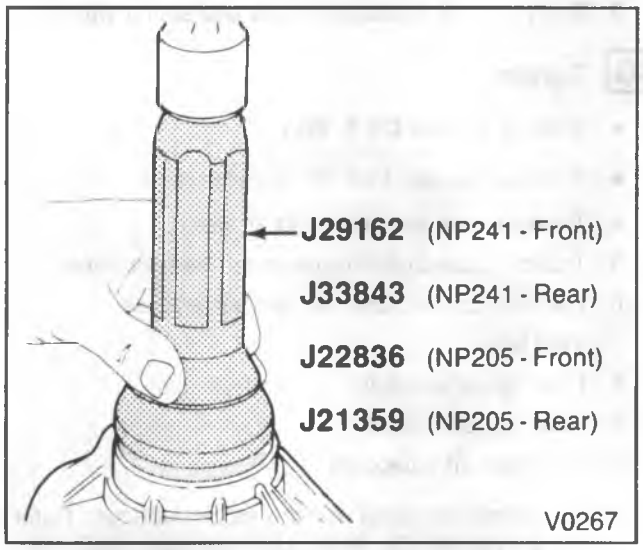

Figure 8—Installing the Output Shaft Seal

REAR EXTENSION HOUSING AND PUMP RETAINER HOUSING REPLACEMENT (NP 241 TRANSFER CASE)

Remove or Disconnect (Figure 9)

- Raise the vehicle. Support with suitable safety stands.

1. Rear propeller shaft and yoke.
2. Catalytic converter shield.
3. Speed sensor connection.
4. Bolts and rear extension housing (108).
5. Snap ring (106).
6. Bolts (110).
7. Pump retainer housing (105).
8. Seal (109). Pry out with a screwdriver. Take care not to damage the seal bore.

Clean

- Gasket surfaces with a suitable solvent.

Install or Connect (Figures 8 and 9)

NOTICE: For steps 2 and 5 see "Notice" on page 7D-1 of this section.

Tool Required:

J33843 Rear Output Shaft Seal Installer

1. Pump retainer housing (105).
   - Make sure the gasket surfaces are clean and free of grease and oil.
   - Apply RTV sealer to the pump retainer housing sealing surfaces.
2. Bolts (110).
   - Apply Loctite 242 or equivalent to the threads of the bolts (107).

Tighten

- Bolts to 40 N•m (30 ft. lbs.).

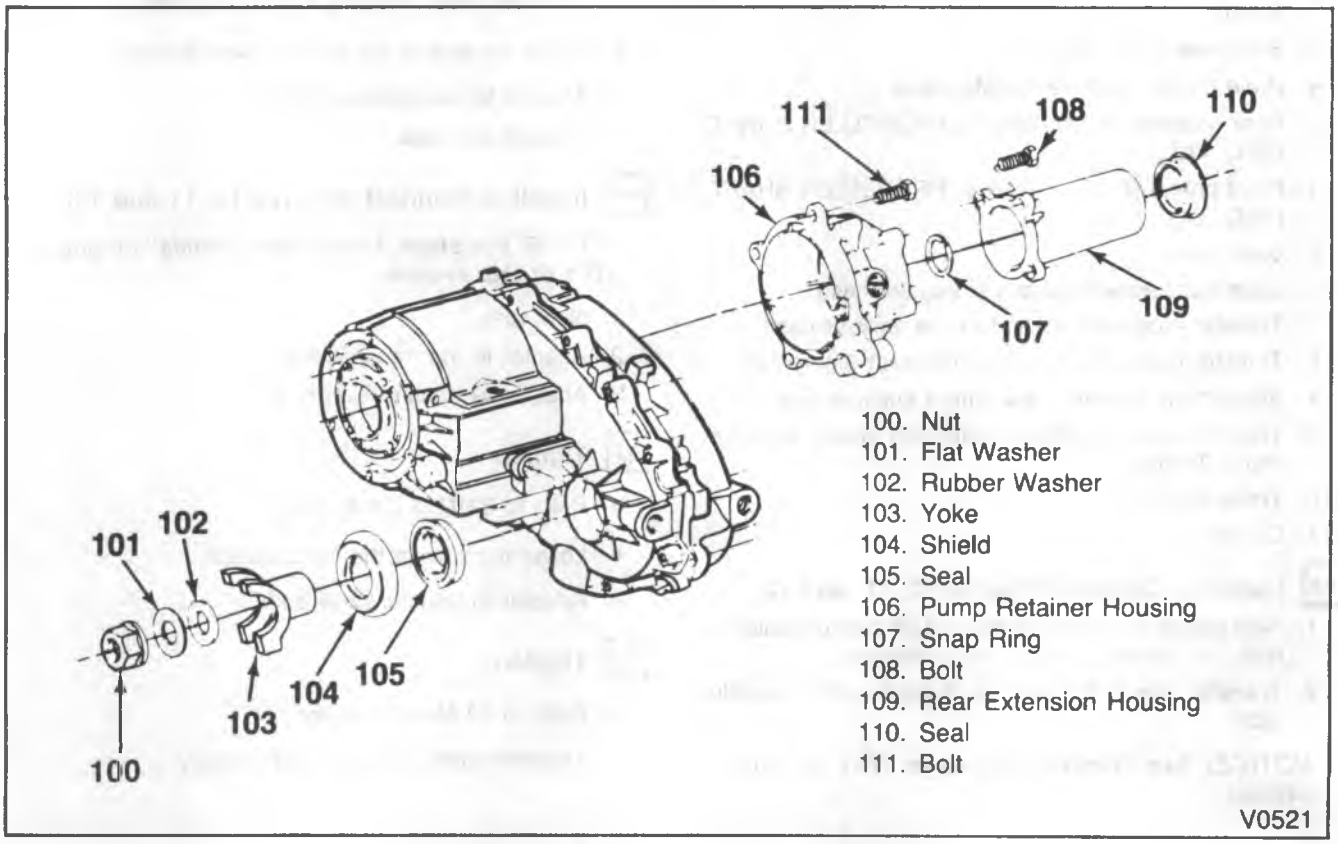

Figure 9—Transfer Case Components (NP 241)

3. Snap ring (106).
4. Rear extension housing (108) to the transfer case.
   - Make sure the gasket surfaces are clean and free of grease and oil.
   - Apply RTV sealer to the rear extension housing sealing surfaces.
5. Bolts (107).
   - Apply Loctite 242 or equivalent to the threads of the bolts (107).

Tighten

- Bolts to 31 N•m (23 ft. lbs.).

6. Seal (109).
   - Lubricate the seal lips with ATF or petroleum jelly.
   - Install using J33843 (figure 8).
7. Rear propeller shaft and yoke.
8. Speed sensor connection.
9. Catalytic converter shield.

- Fill the transfer case with the proper lubricant. Refer to MAINTENANCE AND LUBRICATION (SEC. 0B).
- Lower the vehicle.

TRANSFER CASE REPLACEMENT

Remove or Disconnect (Figures 10, 11, and 12)

1. Battery negative cable.

- Raise the vehicle. Support with suitable safety stands.

2. Skid plate (if equipped).

- Drain the oil from the transfer case.

3. Rear propeller shaft. Refer to PROPELLER SHAFT (SEC. 4A).
4. Front propeller shaft. Refer to PROPELLER SHAFT (SEC. 4A).
5. Vent hose.
6. Electrical connections at the transfer case.
7. Transfer case shift linkage at the transfer case.
8. Transfer case strut rod bolts (if used) (figure 12).

- Support the transfer case with a suitable jack.

9. Transfer case to adapter bolts and spring washers (Auto. Trans).
10. Transfer case.
11. Gasket.

Install or Connect (Figures 10, 11, and 12)

1. New gasket to the transmission. Use gasket sealer to hold it in place. (Manual Transmission.)
2. Transfer case to the vehicle. Support with a suitable jack.

NOTICE: See "Notice" on page 7D-1 of this section.

3. Transfer case to adapter bolts and spring washers.

Tighten

- Bolts to 33 N•m (24 ft. lbs.).
- Remove the jack from the transfer case.

4. Transfer case strut rod bolts (if used).
5. Transfer case shift linkage at the transfer case.
6. Electrical connections to the transfer case.
7. Vent hose.
8. Front propeller shaft.
9. Rear propeller shaft.
10. Skid plate (if equipped).

- Fill the transfer case with the proper lubricant. Refer to MAINTENANCE AND LUBRICATION (SEC. 0B).
- Lower the vehicle.

11. Battery negative cable.

TRANSFER CASE ADAPTER REPLACEMENT (AUTOMATIC TRANSMISSION)

Remove or Disconnect (Figures 10, 11 and 13)

1. Transfer case, as outlined previously.
2. Transfer case mounting to adapter bolts.

- Raise the rear of the transmission slightly.

3. Adapter to transmission bolts.
4. Adapter and seal.

Install or Connect (Figures 10, 11 and 13)

NOTICE: For steps 3 and 4 see "Notice" on page 7D-1 of this section.

1. New seal.
2. Adapter to the transmission.
3. Adapter to transmission bolts.

Tighten

- Bolts to 33 N•m (24 ft. lbs.).
- Lower the rear of the transmission.

4. Adapter to transfer case bolts.

Tighten

- Bolts to 33 N•m (24 ft. lbs.).

5. Transfer case, as outlined previously.

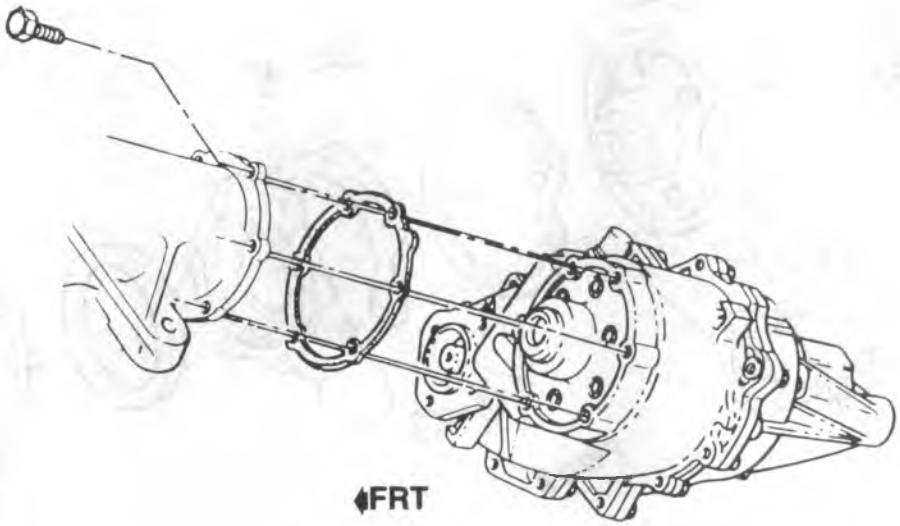

WITH AUTOMATIC TRANSMISSION

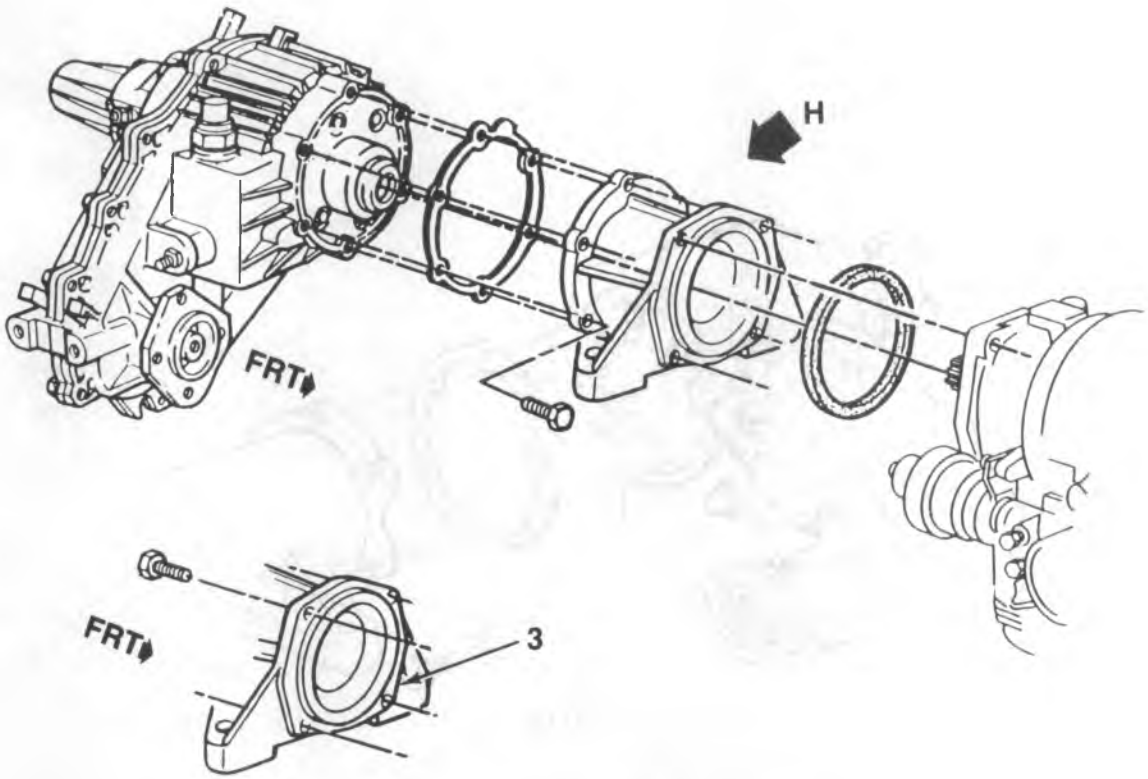

VIEW H

WITH MANUAL TRANSMISSION

V0256

Figure 10—Transfer Case and Adapter (V10/15 and V20/25 Models)

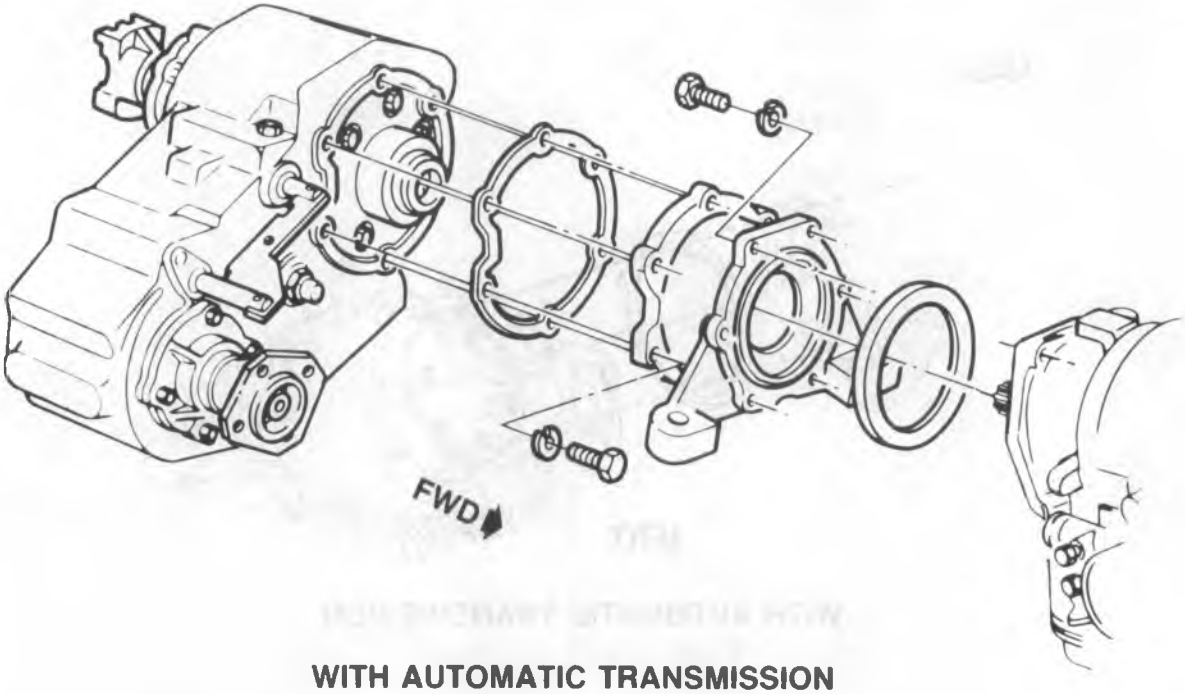

WITH AUTOMATIC TRANSMISSION

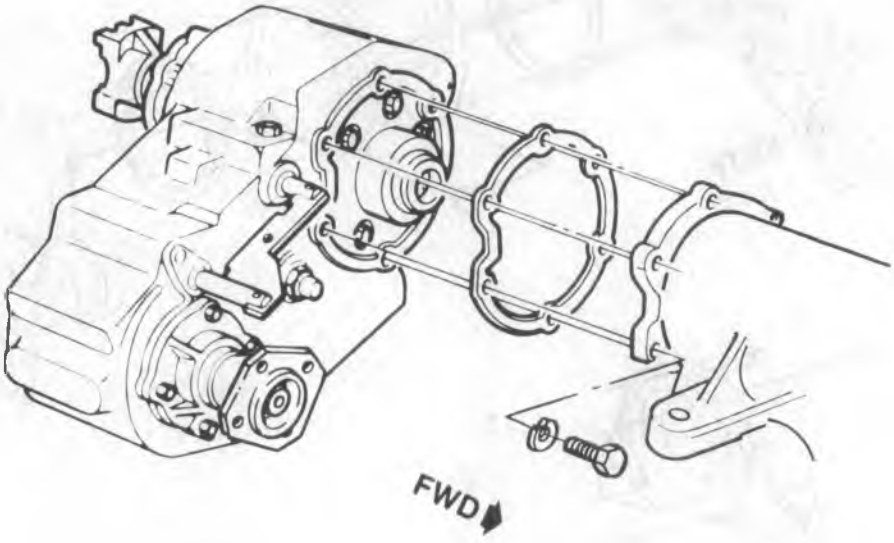

WITH MANUAL TRANSMISSION

V0264

Figure 11—Transfer Case and Adapter (V30/35 Models)

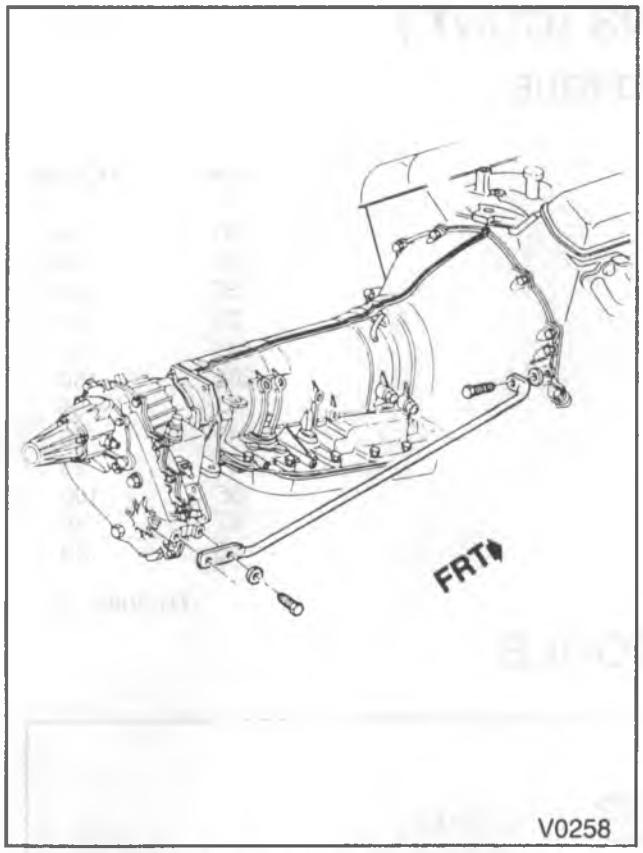

Figure 12—Transfer Case Strut Rod

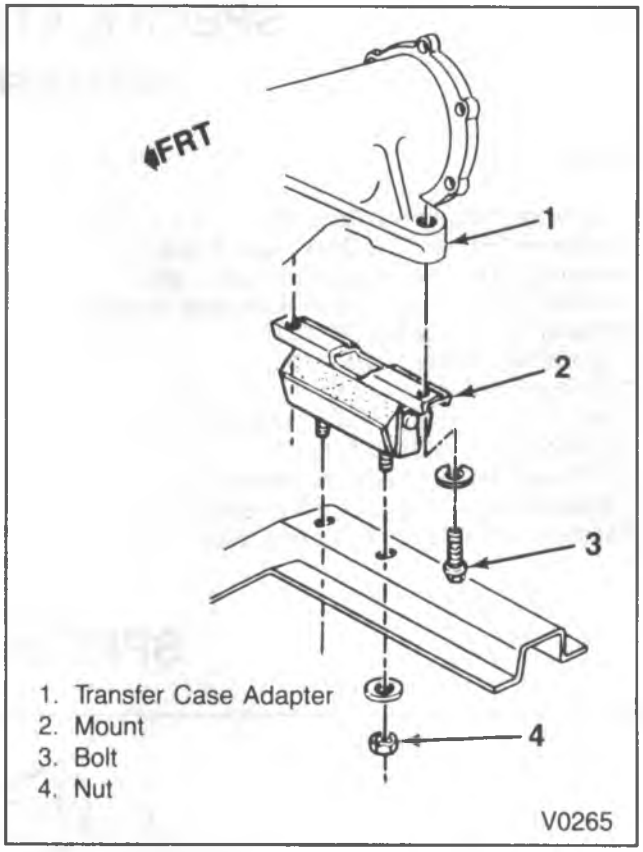

Figure 13—Transfer Case Adapter Mounting (Rear Engine Mounting).

SPECIFICATIONS

MODEL	New Process 241 (NP 241)	New Process 205 (NP 205)
USAGE	V10/15, V20/25	V30/35
HIGH RANGE RATIO	1:1	1:1
LOW RANGE RATIO	2.72:1	1.96:1
OIL CAPACITY	8.5L (4.5 pts.)	2.4L (5.0 pts.)

SPECIFICATIONS (CONT.)

FASTENER TORQUE

ITEM	N·m	Ft. Lbs.
Adapter to Transmission Bolts (Auto. Trans.)	33	24
Adapter to Transfer Case Bolts (Auto. Trans.)	33	24
Mounting to Transfer Case Bolts (Auto. Trans.)	33	24
Transfer Case to Transmission Bolts (Man. Trans.)	33	24
Propeller Shaft Yoke Nut (NP 241)	149	110
Propeller Shaft Yoke Nut (NP 205)	202	150
Drain and Fill Plugs	47	35
Pump Retainer Housing Bolts (NP 241)	40	30
Extension Housing Bolts (NP 241)	31	23
Shift Lever Pivot Bolts (V30/35 Models)	135	100
Transfer Case Adapter Mounting Bolts	47	35
Transfer Case Adapter Mounting Nuts	45	33

TB-3061-2A

SPECIAL TOOLS

1. Front Output Shaft Seal Installer (NP 241)
2. Rear Output Shaft Seal Installer (NP 241)
3. Front Output Shaft Seal Installer (NP 205)
4. Rear Output Shaft Seal Installer (NP 205)

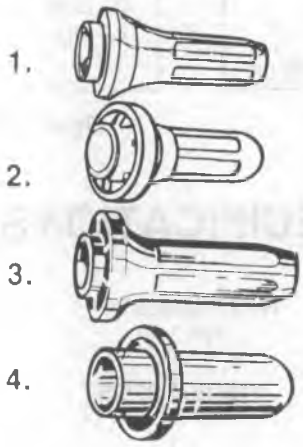

V0266

SECTION 8

ELECTRICAL

CONTENTS

SUBJECT	PAGE
Cab Electrical	8A-1
Lighting Systems	8B-1
Instrument Panel	8C-1
Chassis Electrical	8D-1
Windshield Wiper-Washer System	8E-1

SECTION 8A

CAB ELECTRICAL

***NOTICE:** When fasteners are removed, always reinstall them at the same location from which they were removed. If a fastener needs to be replaced, use the correct part number fastener for that application. If the correct part number fastener is not available, a fastener of equal size and strength (or stronger) may be used. Fasteners that are not reused, and those requiring thread locking compound will be called out. The correct torque value must be used when installing fasteners that require it. If the above conditions are not followed, parts or system damage could result.*

CONTENTS

SUBJECT	PAGE
Basic Electrical	8A- 2
Circuits	8A- 2
Wiring Size Conversion Table	8A- 3
Circuit Malfunctions	8A- 3
Circuit Diagnosis	8A- 4
Diagnostic Tools	8A- 4
Circuit Maintenance and Repair	8A- 5
Cab Electrical Systems	8A- 9
R/V Cab Harness Routings	8A- 9
Fuse Block	8A-13
Power Door Lock System	8A-18
Power Window System	8A-18
Heater System Circuit	8A-19
Air Conditioning Electrical System	8A-19
Diagnosis of Power Door Lock System	8A-20
Diagnosis of Power Window System	8A-21
On-Vehicle Service	8A-22
Power Door Lock Motor Replacement	8A-22
Power Door Lock Switch Replacement	8A-22
Power Window Motor Replacement	8A-22
Power Window Switch Replacement	8A-22
Convenience Center	8A-22
Special Tools	8A-23

BASIC ELECTRICAL

CIRCUITS

An electrical circuit starts from a supply of electricity, and conducts the electricity back to the supply of electricity. There should be a device to open and close the circuit, and a protective device to open the circuit in case too much current flows in the circuit.

Electrical circuits can be set up as series circuits or parallel circuits.

SERIES CIRCUITS (Figure 1)

In series circuits, each electrical device is connected in the circuit so that the current can only go along one path as it flows from the power supply, around the circuit and back to the power supply.

PARALLEL CIRCUITS (Figure 1)

In parallel circuits, the electrical devices are connected by parallel wires that are joined at the start of the circuit. The current divides: part of it flows into one device, part into another.

With circuits in parallel, each circuit can be switched on and off by itself since each circuit receives electricity directly from the power supply.

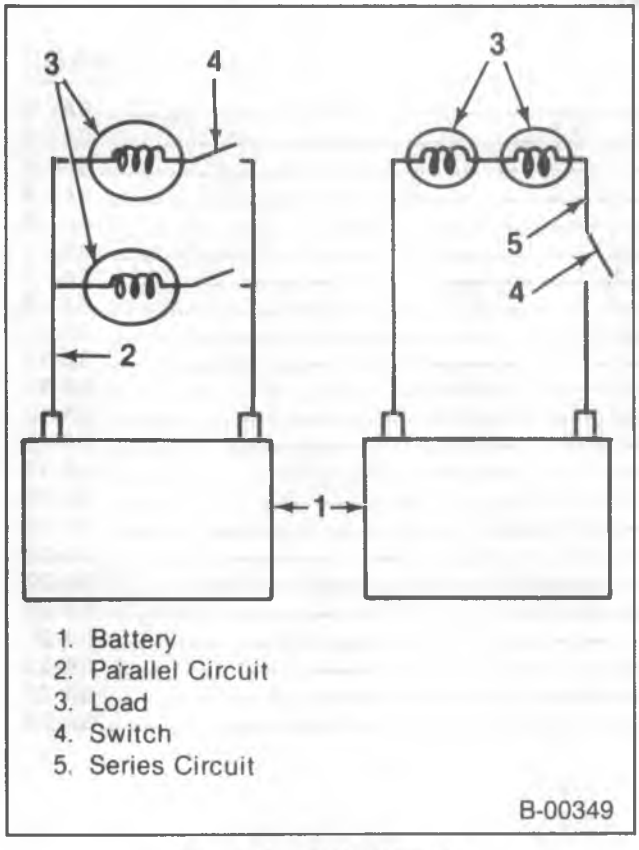

Figure 1—Basic Circuits

CIRCUIT COMPONENTS (Figure 2)

The usual circuit path starts at the power supply which is the battery/generator system. Next in the circuit is the circuit protection component which can be a fusible link, a fuse or a circuit breaker. Then the circuit goes to the circuit controller which can be a switch or a relay. From the circuit controller the circuit goes into the circuit load. The circuit load can be one light or many lights in parallel, an electric motor or a solenoid. After the electricity has passed through the load it must return to the power supply via the ground path. The ground path can be a wire in the harness or it could be through the load housing into the body or frame, thus returning the electricity to the power supply. The body and frame are connected by flexible ground straps.

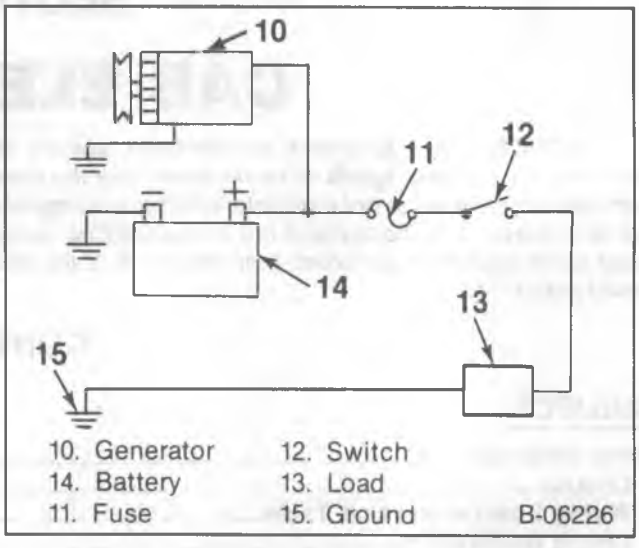

Figure 2—Circuit Components

FUSIBLE LINK

A fusible link is a section of wire that is usually four gage sizes smaller than the circuit it protects. A special insulation is used that swells when heated by the wire. Fusible links are usually found in the engine compartment harnesses. The function of the fusible link is to melt open when an overload occurs, thus preventing any damage to the circuit.

FUSES

The most common protector in the vehicle circuit is a fuse. A fuse consists of a fine wire or strip of metal inside a glass tube or plastic housing. The strip melts and interrupts the flow of current in the circuit when there is an overload caused by an unwanted short or ground. The fuse is designed to melt before the wiring or electrical components in a circuit can be damaged. Naturally, the cause must be located and corrected before the fuse is replaced or the new fuse will also blow.

Since different circuits handle different amounts of current, fuses of various ratings are used. Fuses are rated in amperes. Be sure to replace a blown fuse with a fuse of the same rating.

CIRCUIT BREAKERS

Circuit breakers are another form of circuit protector. There are two types of circuit breakers; automatic reset and remote reset.

The automatic reset breaker opens when excess current heats a bimetallic strip, causing the strip to bend and open a set of contacts. Then the strip cools and closes the contacts. So the circuit breaker opens and closes until the excess current condition is corrected or the circuit is disconnected from the power supply.

The remote reset circuit breaker has a heating wire wound around the bimetallic strip. When an excess current happens, the strip heats, bends, and opens the contacts. Then a small current flows through the heat wire, keeping the strip hot and the contacts open. This type of breaker will stay open until either the power supply is disconnected from the circuit or the breaker is removed from the circuit. Then the breaker can cool and reset.

CIRCUIT CONTROLLERS

Circuit controllers consist of switches or relays. Switches are usually operated by a mechanical means such as a hand or lever. Switches are usually at the beginning of a circuit but can be used to control a ground path. For example, the switch controlling the headlights is at the power end of the circuit while the door switch controlling the domelight completes the ground path.

Relays are remotely controlled switches. They are used in high current circuits and in circuits controlled by sensors.

Relays are designed so that a small current circuit will be able to control a large current circuit.

WIRING HARNESS AND WIRES

Every wire is a specific size with colored or striped insulation that is indicated on the wiring diagrams. Insulation colors help to trace circuits and to make proper connections. Abbreviations and symbols used for indicating wire insulation colors and patterns are as follows:

BLK	Black	PPL	Purple
BRN	Brown	TR	Tracer
CHK	Check	YEL	Yellow
CR	Cross	//	Parallel
GRN	Green	WHT	White
NAT	Natural	BLU	Blue
SGL	Single	STR	Stripe
ORN	Orange	PNK	Pink
GR	Gray	DK	Dark

GMTB-4001-A

Some wires are grouped and taped together or encased in a split plastic casing. This grouping of wires is called a harness. For some purposes, it is more practical to use a single wire protected by a braided tubing called a loom.

Wiring harnesses are joined by using a multiple plug and receptacle connector block, or a terminal post chassis junction block. In the instrument panel area, plastic insulated blade-type connectors and screw-type terminals are used.

Each harness or wire must be held securely in place by clips or other holding devices to prevent chafing of the insulation.

WIRE SIZE

Wire size in a circuit is determined by the amount of current, the length of the circuit and the voltage drop allowed. Wire size is specified using the metric gage. The metric gage describes the wire size directly in cross section area measured in square millimeters.

WIRE SIZE CONVERSION TABLE

Metric Size $(mm)^2$	AWG Size
0.22	24
0.5	20
0.8	18
1.0	16
2.0	14
3.0	12
5.0	10
8.0	8
13.0	6
19.0	4
32.0	2
40.0	1
50.0	0
62.0	00

GMTB-4002-A

CIRCUIT MALFUNCTIONS

There are three electrical conditions that can cause a nonworking circuit; an "Open Circuit," a "Short Circuit," and a "Ground Circuit."

OPEN CIRCUIT (Figure 3)

An open circuit occurs whenever there is a break in the circuit. The break can be corrosion at the connector, a wire broken off in a device, or a wire that burned open from an overload of current.

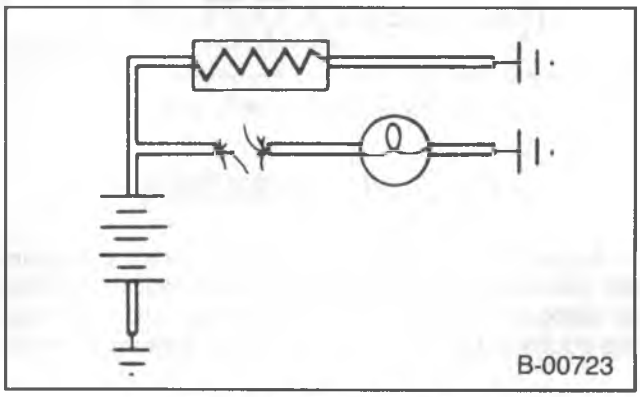

Figure 3—Open Circuit

SHORT CIRCUIT (Figure 4)

A short circuit happens when the current bypasses part of the normal circuit. This bypassing is usually caused by wires touching, salt water in or on a device such as a switch or a connector or solder melting and bridging conductors in a device.

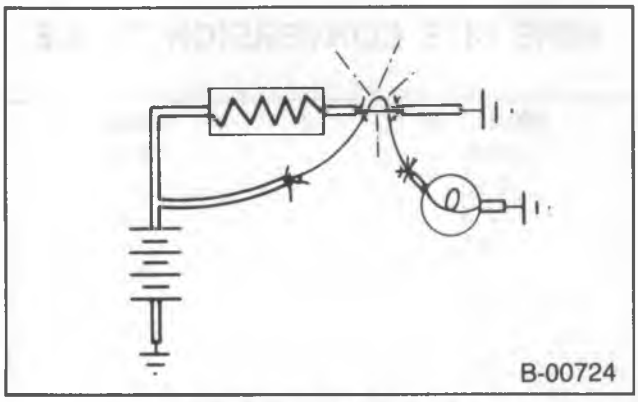

Figure 4—Short Circuit

GROUNDED CIRCUIT (Figure 5)

A grounded circuit is like a short circuit but the current flows directly into a ground circuit that is not part of the original circuit. This may be caused by a wire rubbing against the frame or body. Sometimes a wire will break and fall against metal that is connected electrically to the ground side of the power supply. A ground circuit may also be caused by deposits of oil, dirt and moisture around connections or terminals, which provide a good path to ground.

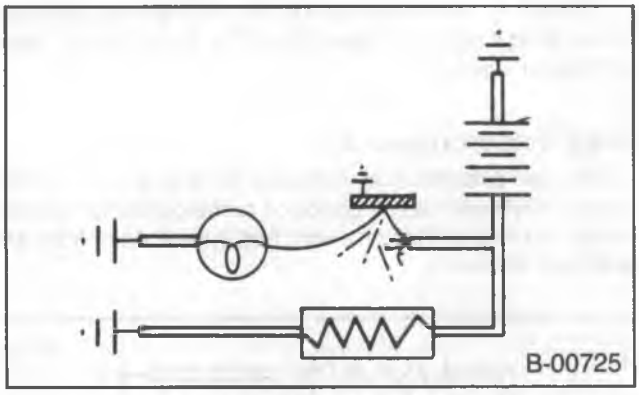

Figure 5—Grounded Circuit

CIRCUIT DIAGNOSIS

A clear understanding of the circuit and a wiring diagram are needed for effective diagnosis. Use a logical sequence of testing to find the trouble. Use the diagnostic tools. After the trouble is fixed, make sure the circuit works correctly.

DIAGNOSTIC TOOLS

UNPOWERED TEST LAMP

This tool consists of a 12 volt lamp with leads. The ends of the leads usually have alligator clamps, but various kinds of probes, terminal spades, and special connectors are used also.

The unpowered test lamp is used on an open circuit. One lead of the test lamp is grounded and the other lead is moved around the circuit to find the open. Depending on the physical layout of the circuit, sometimes it will be easier to start at the power supply and other times it is easier to start at the circuit load or ground circuit.

POWER TEST LAMP

This lamp is a pencil shaped unit with a self contained battery, a 1.5 volt lamp bulb, a sharp probe and a ground lead fitted with an alligator clip.

This test lamp is used mainly for testing components that are disconnected from the vehicle power supply. The power test lamp is also useful for testing suspected high resistance points in a circuit such as connectors and ground circuits that are corroded or loose.

JUMPER

The jumper is usually a long wire with alligator clamps. A version of the jumper has a fuse holder in it with a 10 Amp fuse. This will prevent damaging the circuit if the jumper is connected in the wrong way.

The jumper is used to locate opens in a circuit. One end of the jumper is attached to a power source and then the other end is attached to the load in the circuit (i.e.; lamp, motor). If the load works, try "jumping" to circuit points that are progressively closer to the power supply. When the circuit load stops working, the open has been located.

The jumper is also used to test components in the circuit such as connectors, switches, and suspected high resistance points.

NOTICE: The following instruments: Ammeter, Voltmeter, and Ohmmeter, each have a particular application for troubleshooting electrical circuits.

When using an ammeter or voltmeter, and the value being tested is unknown, always use the highest scale first and work downward to a mid-scale reading whenever possible. This will avoid damage to the instrument.

Never use an ohmmeter in a power circuit, or as a substitute for a voltmeter or ammeter, as damage to the instrument will result.

AMMETER (Figure 6)

Disconnect the circuit from the power source before connecting the ammeter. The ammeter measures the amount of electrical current, amperes, moving through a conductor. The ammeter must be placed in series with the circuit being tested. Be sure that the ammeter's positive terminal is connected to the positive (battery) side of the circuit and the ammeter's negative terminal is connected to the negative (ground) side of the circuit.

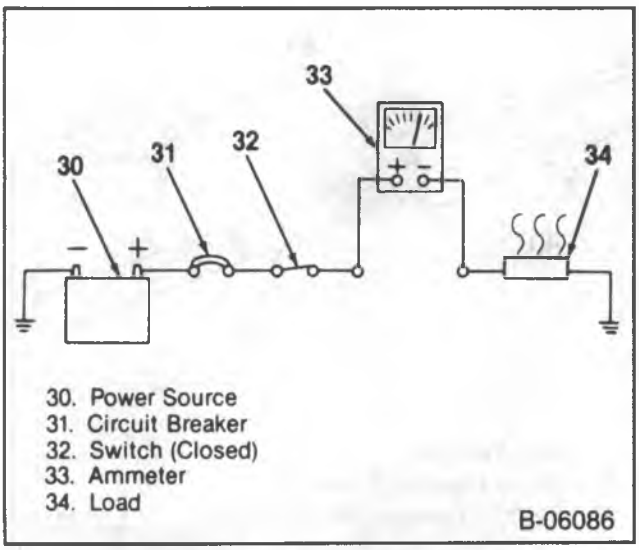

Figure 6—Ammeter Circuit

OHMMETER (Figure 7)

The ohmmeter is an instrument designed to indicate resistance in ohms. It is used to test the condition of a unit disconnected from the circuit.

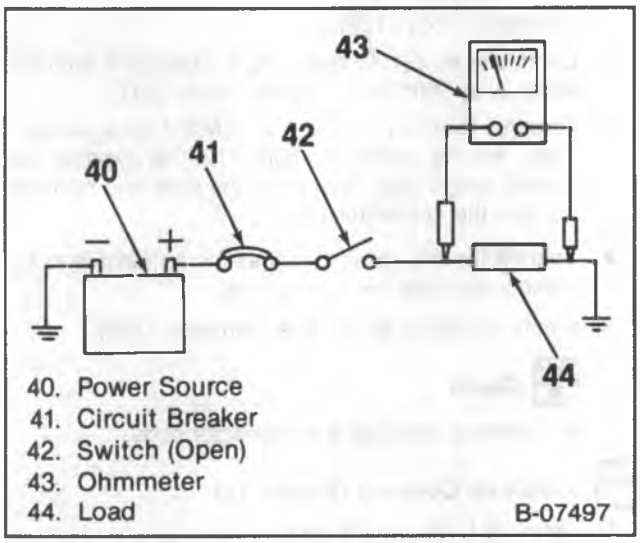

Figure 7—Ohmmeter Circuit

OHMMETER CALIBRATION

When the ohmmeter probes are connected together, a circuit is completed causing the meter needle to deflect. The needle should read ZERO ohms, if it does not, rotate the CAL or ADJ knob to ZERO the needle.

When the probes are held apart, the needle moves to the maximum (infinite) resistance side of the scale.

The meter is now ready for use.

VOLTMETER (Figure 8)

The voltmeter (properly observed) will give the technician more information than the ammeter, ohmmeter and test lamp combined. Its application for troubleshooting here is to measure the electrical pressure (voltage) drop in a resistance circuit.

To use a voltmeter for troubleshooting an electrical problem, connect it in parallel with the existing circuit. If the voltmeter is connected in series with the circuit being tested, the nature of the circuit would be changed and the reading would have no particular value or use. Connect the meter terminals according to polarity as shown.

The dash mounted voltmeter (in the vehicle) should also be observed for monitoring proper operation of the generator battery cranking motor, and cranking circuit. In this application, battery voltage drop can be monitored while the engine is cranking; and after the engine is running, generator output voltage can be monitored. This can be a valuable first step prior to disengaging other electrical problems.

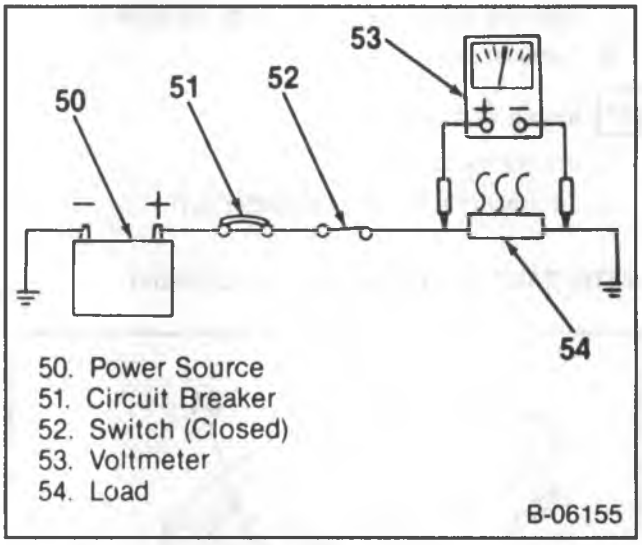

Figure 8—Volt Meter Circuit

CIRCUIT MAINTENANCE AND REPAIR

MAINTENANCE AND REPAIR

All electrical connections must be kept clean and tight. Loose or corroded connections may cause a discharged battery, difficult starting, dim lamps, and possible damage to the generator and regulator. Wires must be replaced if insulation becomes burned, cracked, or deteriorated.

To splice a wire or repair one that is frayed or broken, always use rosin flux solder to bond the splice and insulating tape to cover all splices or bare wires.

When replacing wire, it is important that the correct size wire be used as shown on applicable wiring diagrams or parts book. Each harness or wire must be held securely in place to prevent chafing or damage to the insulation due to vibration.

Never replace a wire with one of a smaller size or replace a fusible link with a wire of a larger size.

WIRING CONNECTOR TERMINAL REPLACEMENT (BLADE TYPE)

Remove or Disconnect (Figures 9 and 10)

1. Terminal lock tang (70).
2. Terminal (61).

Install or Connect (Figures 9 and 10)

1. Pry up on the tang (70).
2. Terminal (61) into the connector (60).

WIRING CONNECTOR TERMINAL REPLACEMENT (TWIN LOCK TYPE)

Remove or Disconnect (Figure 11)

Tool Required:

J 22727 Terminal Remover

1. Connector lock tangs.
2. Terminal locks using J 22727 or equivalent.
3. Terminal (80).

Install or Connect

1. Pry out the tangs.
2. Terminal (80) into the connector (81).

METRI-PACK CONNECTOR REPLACEMENT

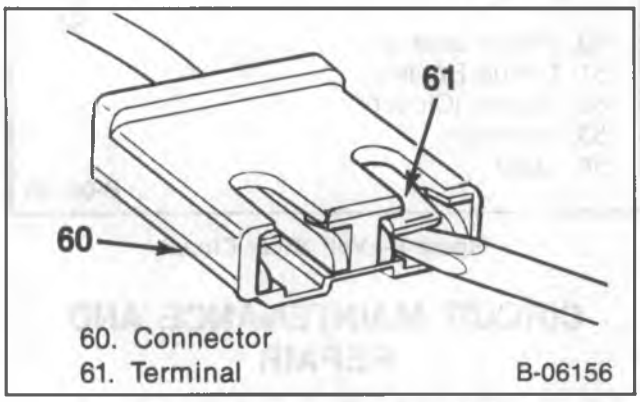

Figure 9—Removing Terminal

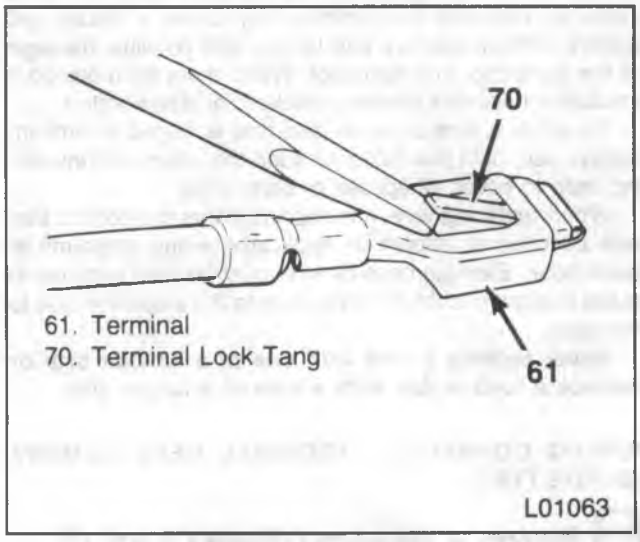

Figure 10—Resetting the Lock Tang

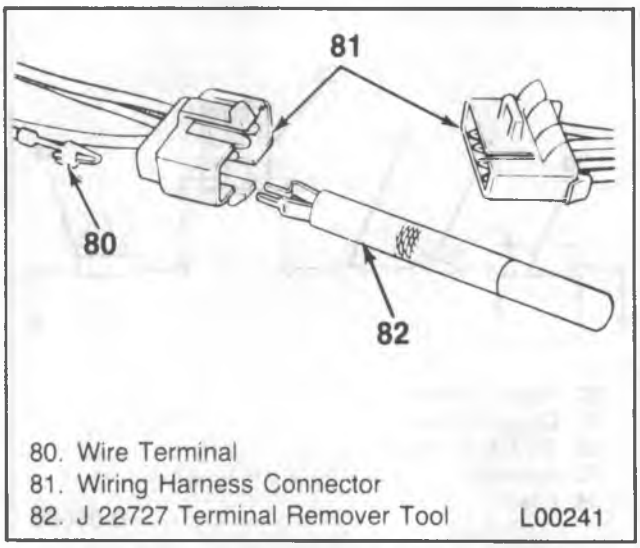

Figure 11—Twin Lock Connector Terminal

Remove or Disconnect (Figure 12)

Tool Required:

J 35689-A Terminal Remover

1. Primary lock (121) by lifting.
2. Connector body (137).
3. Connector seal (120) by pulling the seal back onto the wires away from the connector body (137).
4. Terminal (136) by inserting J 35689-A or equivalent (139) into the connector body (137) to depress the locking tang (138), then push the wire and terminal through the connector body.

- Snip off the old terminal unless the terminal is to be reused, reshape the locking tang.

5. 5 mm (0.2-inch) of the wire insulation (130).

Clean

- Terminal cavity of the connector body.

Install or Connect (Figure 12)

1. Terminal (136) on the wire.

- Crimp and solder the terminal.

2. Terminal (136) into the connector cavity by pulling the wire on the seal side of the connector until the locking tang (138) is fully seated.
3. Seal (120) by pressing the seal into the connector body (137) until it is fully seated.
4. Connector until the primary lock (121) engages.

WEATHER-PACK CONNECTORS (Figure 12)

Special connectors known as Weather-Pack connectors require a special tool J 28742-A for servicing. This special tool is required to remove the pin and sleeve terminals. If removal is attempted with an ordinary pick, there is a good chance that the terminal will be bent or deformed. Unlike standard blade-type terminals, these terminals cannot be straightened once they are bent.

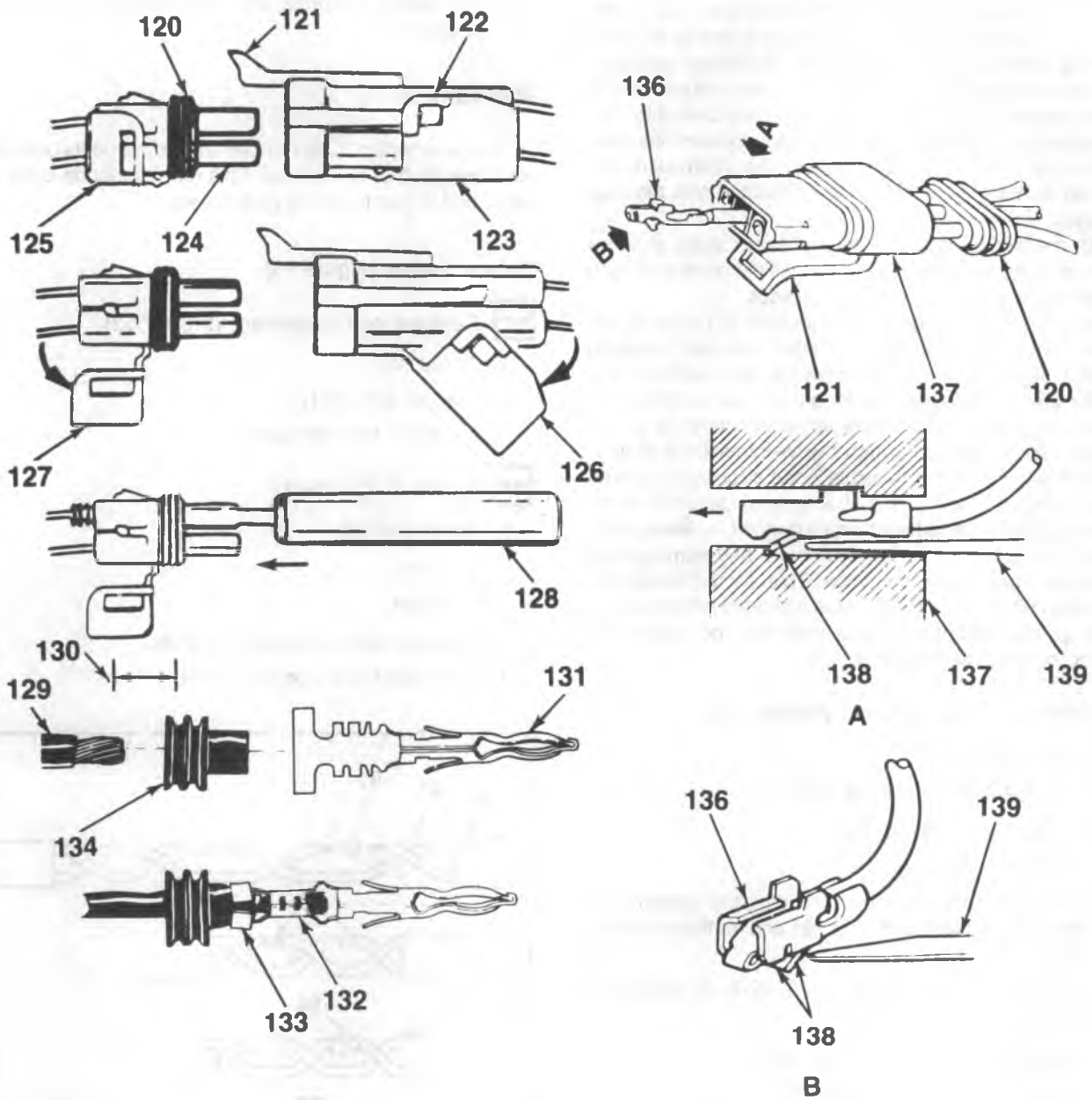

120. Connector Seal
121. Primary Lock
122. Secondary Lock Staple
123. Secondary Lock
124. Terminal Barrel
125. Secondary Lock
126. Lock Opened
127. Lock Opened
128. J 28742-A Terminal Remover
129. Wire
130. 5 mm (0.2 inch)
131. Terminal
132. Roll Crimp
133. Roll Crimp
134. Terminal Insulator
136. Metri-Pack Series 150 Female Terminal
137. Connector Body
138. Locking Tang
139. J 35689-A Terminal Remover

L00242

Figure 12—Weather-Pack and Metri-Pack Connectors

Make sure that the connectors are properly seated and all of the sealing rings are in place when connecting the leads. The hinge-type flap provides a back-up, or secondary locking feature for the terminals. They are used to improve the connector reliability by retaining the terminals if the small terminal lock tangs are not positioned properly.

Molded-on-connectors require complete replacement of the connection. This means splicing a new connector assembly into the harness. Environmental connections cannot be replaced with standard connections. Instructions are provided with the Weather-Pack connector and terminal packages.

With the low current and voltage levels found in some circuits, it is important that the best possible bond at all wire splices be made by soldering the splices.

Use care when probing the connections or replacing terminals in them, it is possible to short between opposite terminals. If this happens to the wrong terminal part, it is possible that damage may be done to certain components. Always use jumper wires between connectors for circuit checking. Never probe through the Weather-Pack seals.

When diagnosing for possible open circuits, it is often difficult to locate them by sight because oxidation or terminal misalignment are hidden by the connectors. Merely wiggling a connector on a sensor or in the wiring harness may correct the open circuit condition. This should always be considered when an open circuit is indicated while troubleshooting. Intermittent problems may also be caused by oxidized or loose connections.

Remove or Disconnect (Figure 12)

Tool Required:

J 28742-A Terminal Remover

1. Primary lock (121) by lifting.
2. Connector sections.
3. Secondary lock (125) by spreading the sides of the hasps, thus clearing the staples and rotating the hasp (127).
4. Terminal (131) by using J 28742-A or equivalent (128).

- Snip off the old terminal assembly.

5. 5 mm of the wire insulation (130).

Clean

- Terminal Barrel (124).

Install or Connect (Figure 12)

1. Terminal insulator (134) on the wire. Slide the insulator back on the wire about 8 cm (3 inches).
2. Terminal (131) on the wire.
   - Roll crimp (132) and solder the terminal.
3. Terminal insulator (134) and roll crimp (133).
4. Terminal (131) into the connector.
5. Secondary lock (125).
6. Connector sections until the primary lock (121) engages.

WIRING REPAIR

The wire repair is very important for the continued reliable operation of the vehicle. This repair must be done as described in the following procedures.

Twisted Leads (Figure 13)

Remove or Disconnect (Figure 13)

1. Jacket (90).
2. Twisted wires (91).
3. Insulation from the wire.

Install or Connect

1. Splice clip (93).
   - Crimp.
   - Solder.
2. Electrical tape wrap (94) on wires.
3. Outer electrical tape wrap (95).

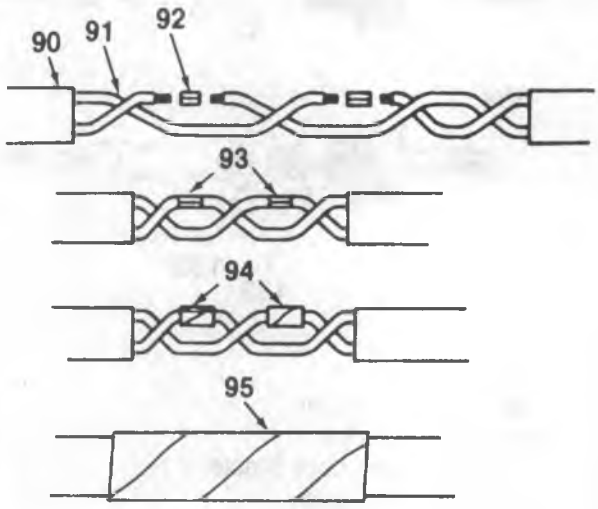

90. Jacket
91. Twisted Wires
92. Splice Clip
93. Crimp and Solder
94. Electrical Tape Wrap
95. Outer Electrical Tape Wrap.

B-06230

Figure 13—Twisted Lead Repair

Twisted Leads/Shielded Cable (Figure 14)

Remove or Disconnect

1. Jacket (100)
2. Unwrap aluminum/mylar tape (101).
3. Drain wire (102).
4. Leads.
5. Insulation on the leads.

Install or Connect

1. Splice clips (103).
   - Crimp and solder the splice clips (104).
2. Electrical tape (105) on the splices.
3. Aluminum/mylar tape (101) by wrapping and taping.
4. Drain wire (102) with a splice clip (106).
   - Crimp and solder the splice clip.
5. Outer jacket electrical tape wrap (107).

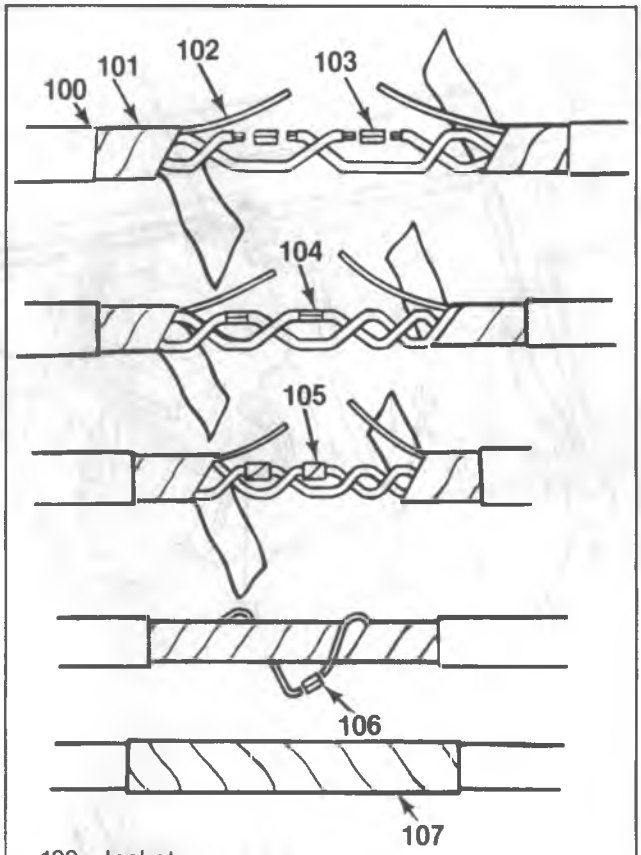

100. Jacket
101. Aluminum/Mylar Tape
102. Drain Wire
103. Splice Clip
104. Crimp and Solder
105. Electrical Tape Wrap
106. Drain Wire Splice Clip, Crimped And Soldered.
107. Outer Electrical Tape Wrap.

B-06231

Figure 14—Twisted/Shield Lead Repair

CAB ELECTRICAL SYSTEMS

R/V CAB HARNESS ROUTINGS

There are several wiring harnesses routed throughout the cab which provide continuity between the electrical components. These harnesses consist of: the instrument panel harness, the power door locks and power window harness, the radio harness, the heater harnesses, the air conditioning harnesses and the interior lighting harnesses.

INSTRUMENT PANEL (Figure 15)

This harness is located along the upper back edge of the instrument panel. It starts from the fuse panel which is located at the left side of the dash panel, and goes up to the left side of the instrument panel and across the instrument panel to the right side of the cab.

As the instrument panel harness is routed across the instrument panel, various circuits branch off to the switches, indicators, and the instrument panel. The harness is held in place with bendable clips.

Other harnesses are carried in the same supports as the instrument panel harness. These consist of the power door locks, power window, radio, heater and air conditioning harnesses.

POWER DOOR LOCKS AND POWER WINDOWS HARNESS (Figures 16 and 17)

This harness starts at the fuse block and routes to the left and right along the instrument panel. At the middle of the instrument panel, the harness branches off to the relay assembly. The relay assembly is located on the inside of the dash panel, just above the steering column. The harness then goes to a set of connectors on the inner wheel housing. From the connectors the harness passes through a grommet in the front door opening trim panel and then through a flexible coupling to the door. Inside the door the harness branches off to the control switches, the door lock motors, and the power window motors. The harness connectors are fastened to the control switches with remaining nuts.

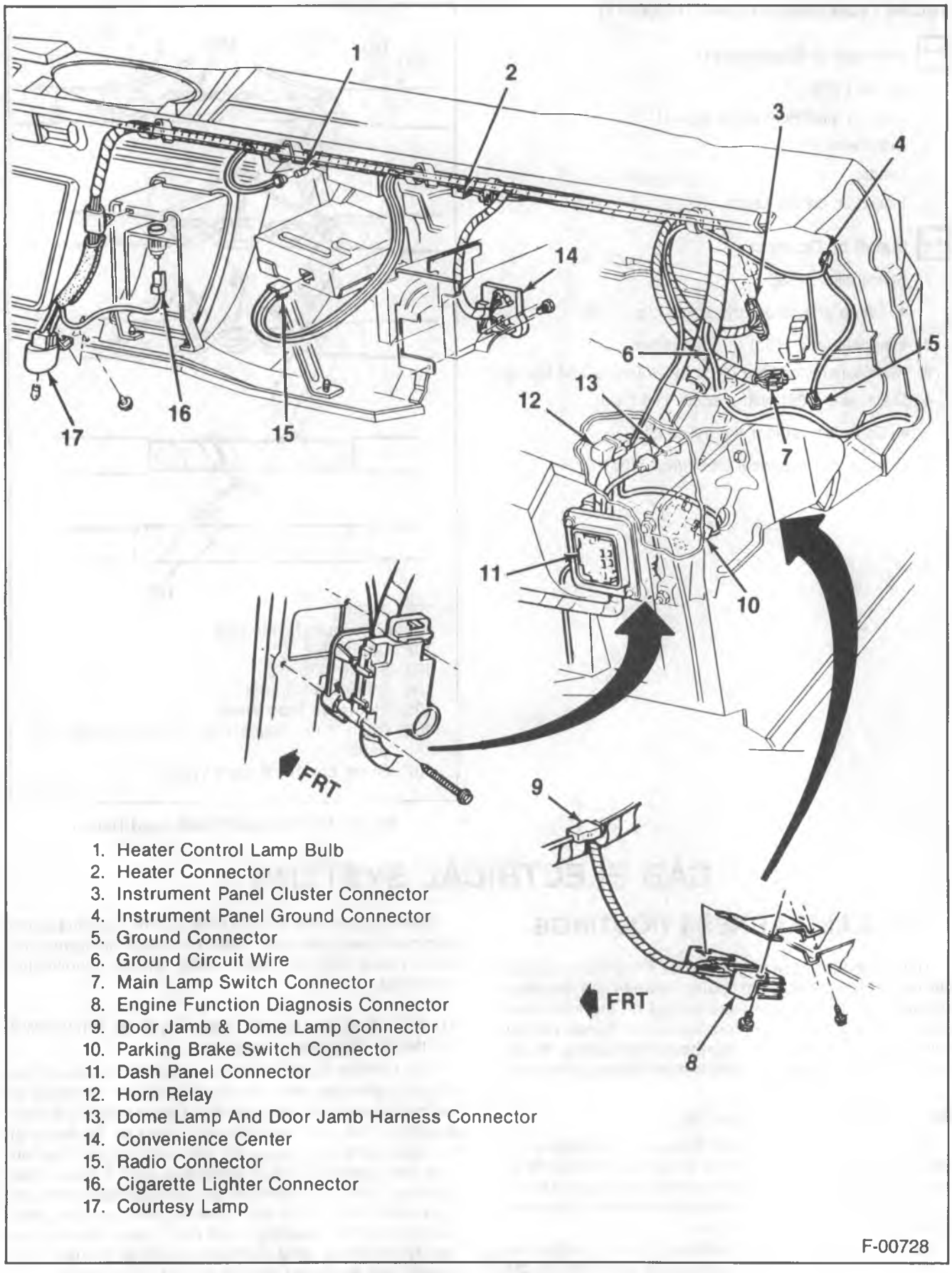

1. Heater Control Lamp Bulb
2. Heater Connector
3. Instrument Panel Cluster Connector
4. Instrument Panel Ground Connector
5. Ground Connector
6. Ground Circuit Wire
7. Main Lamp Switch Connector
8. Engine Function Diagnosis Connector
9. Door Jamb & Dome Lamp Connector
10. Parking Brake Switch Connector
11. Dash Panel Connector
12. Horn Relay
13. Dome Lamp And Door Jamb Harness Connector
14. Convenience Center
15. Radio Connector
16. Cigarette Lighter Connector
17. Courtesy Lamp

Figure 15—R/V Instrument Panel Harness

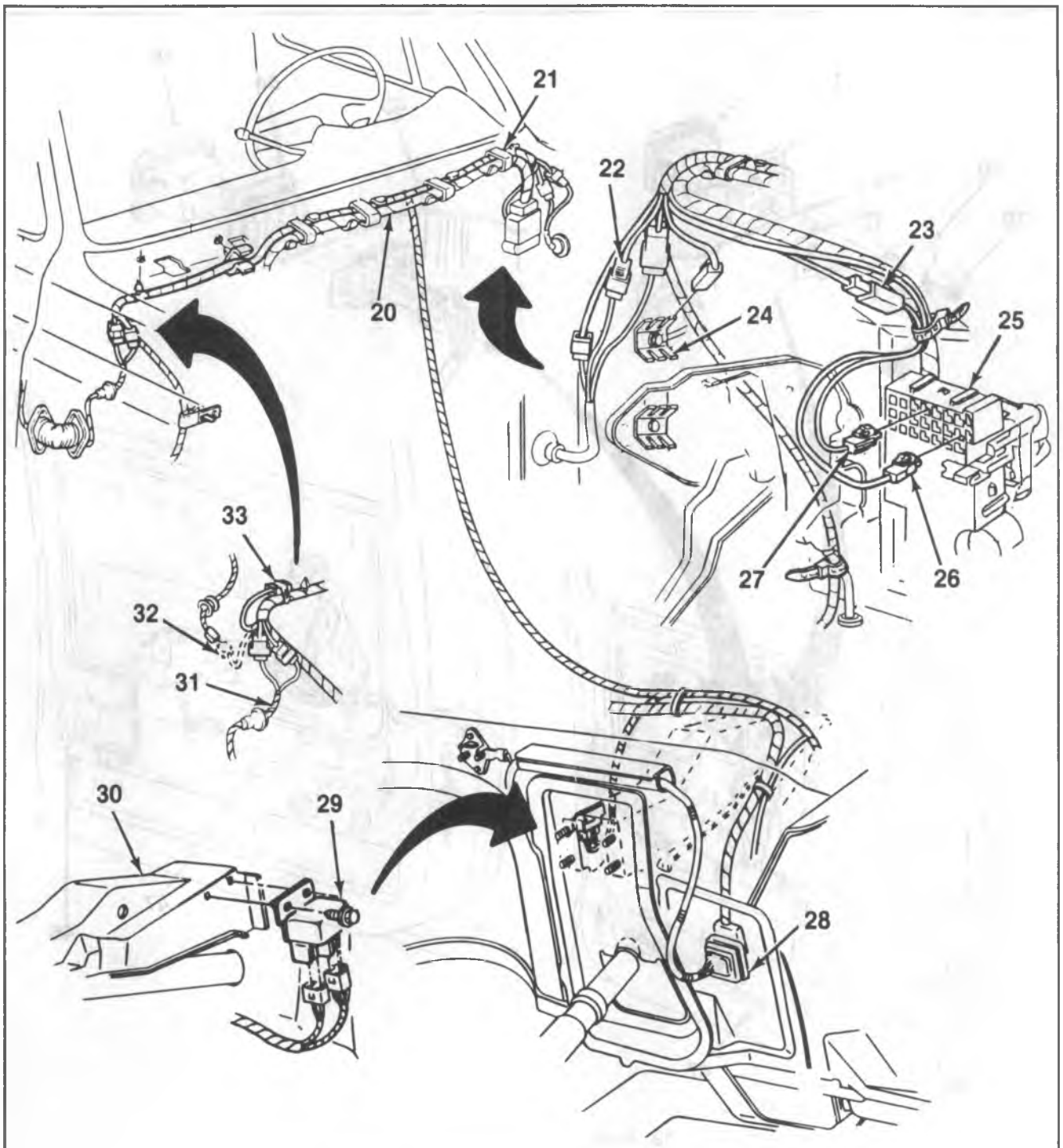

20. Instrument Panel Harness
21. Power Lock And Window Harness
22. Door Harness Connector
23. Power Window Connector
24. Ground
25. Fuse Block
26. Power Lock Connector
27. Power Window Connector
28. Dash Panel Connector
29. Power Door Lock Relay
30. Brake Pedal Bracket
31. Side Front Door Harness
32. Rear Panel Door Harness Connector
33. Rear Panel Door Power Lock Connector

F-00729

Figure 16—Power Door Locks and Windows

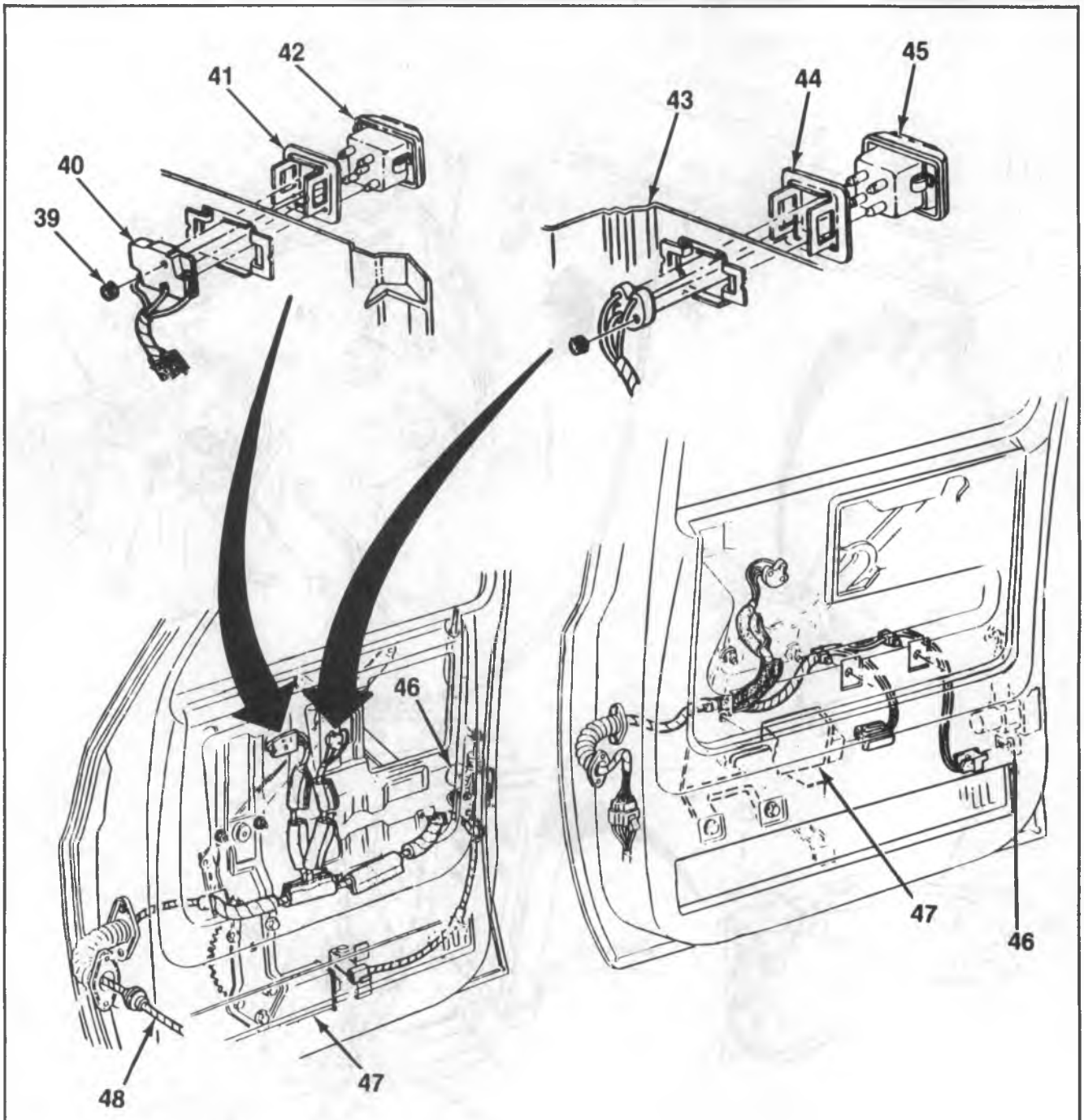

39. Nut
40. Power Window Switch Connector
41. Retainer Bezel
42. Power Window Switch
43. Power Door Lock Switch Connector
44. Retainer Bezel
45. Power Door Lock Switch
46. Power Door Lock Motor
47. Power Window Motor
48. Front Door Harness

F-00730

Figure 17—R/V Door Wiring

REAR DOOR POWER LOCK HARNESS (Figure 18)

The rear doors power lock harness starts at a connector in the fuse block. The harness is routed along the instrument panel harness, with a branch going to the power door lock switch assembly in the instrument panel. The harness then drops down the right front door hinge frame and routes back along the right door sill to the right front door latch frame. The harness then travels up the right front door latch frame to its midpoint where a connector is located. The harness then goes to the roof halo panel and back to the rear door frame.

At the rear door frame, the harness is connected to a contact assembly on the right rear door frame. This contact assembly is aligned with a contact assembly mounted on the right rear door. From the contact assembly on the door, the harness then goes to the lock motor.

CARGO LAMP HARNESS (Figure 19)

The harness starts from the instrument panel harness and routes under the left front door sill. The harness then goes up the left front door latch frame, through a connector, and into a control switch.

From the control switch, the harness goes down the frame, back along the rear door sill and then up the rear door latch frame. From the top of the frame the harness goes to the cargo lamp.

FUSE BLOCK

The fuse block holds the fuses and circuit breakers that protect the circuits. The fuse block is located on the left side of the dash panel and is fastened to the dash panel connector block with two screws. The fuse panel connects to the engine compartment harness. Power leads from the various circuits plug into the fuse block.

The fuses are encased in plastic and have twin blade connectors. The fuses are printed and color coded with the amperage rating. Refer to Figures 20 and 21.

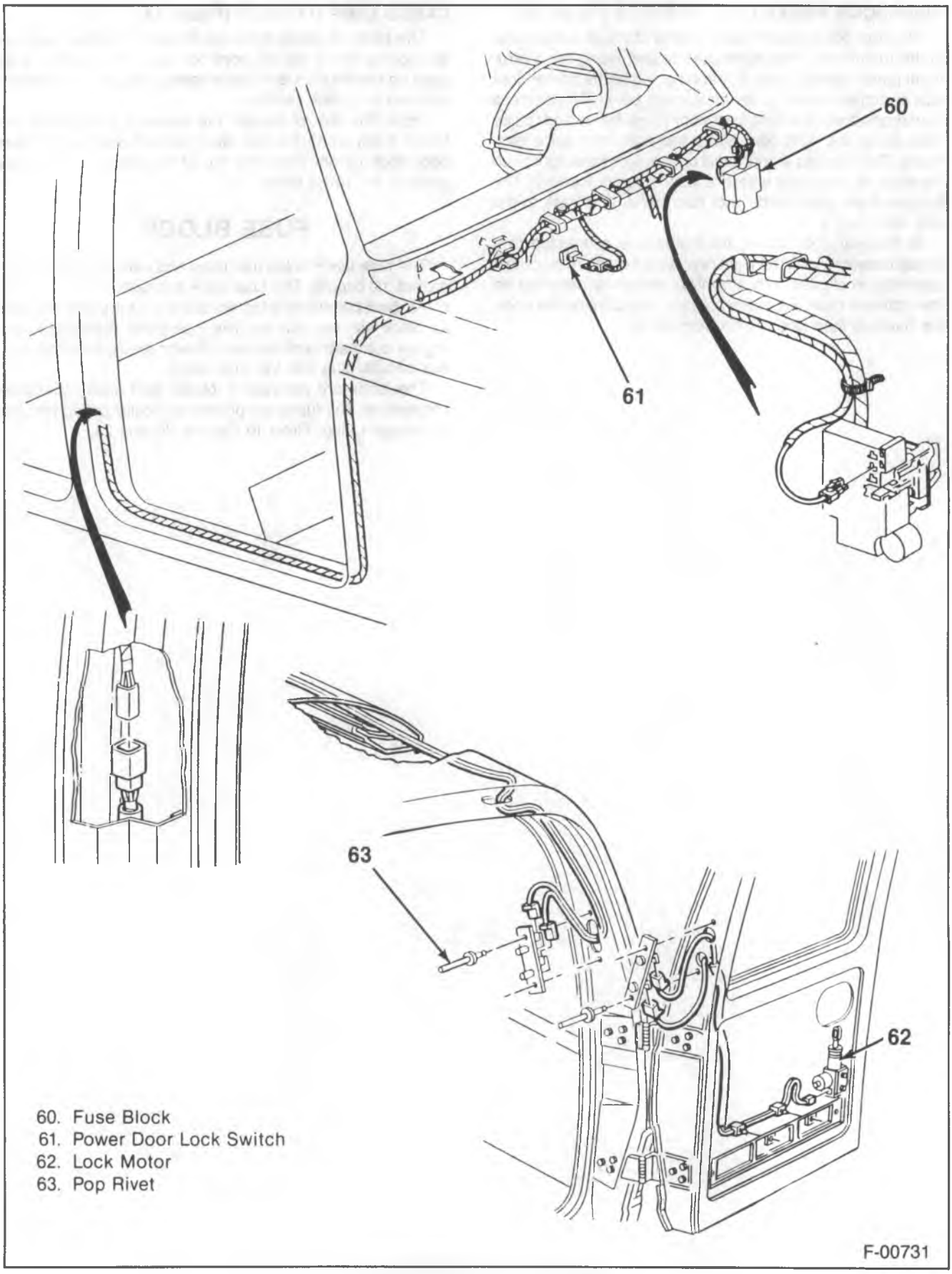

Figure 18—R/V Door Lock Harness

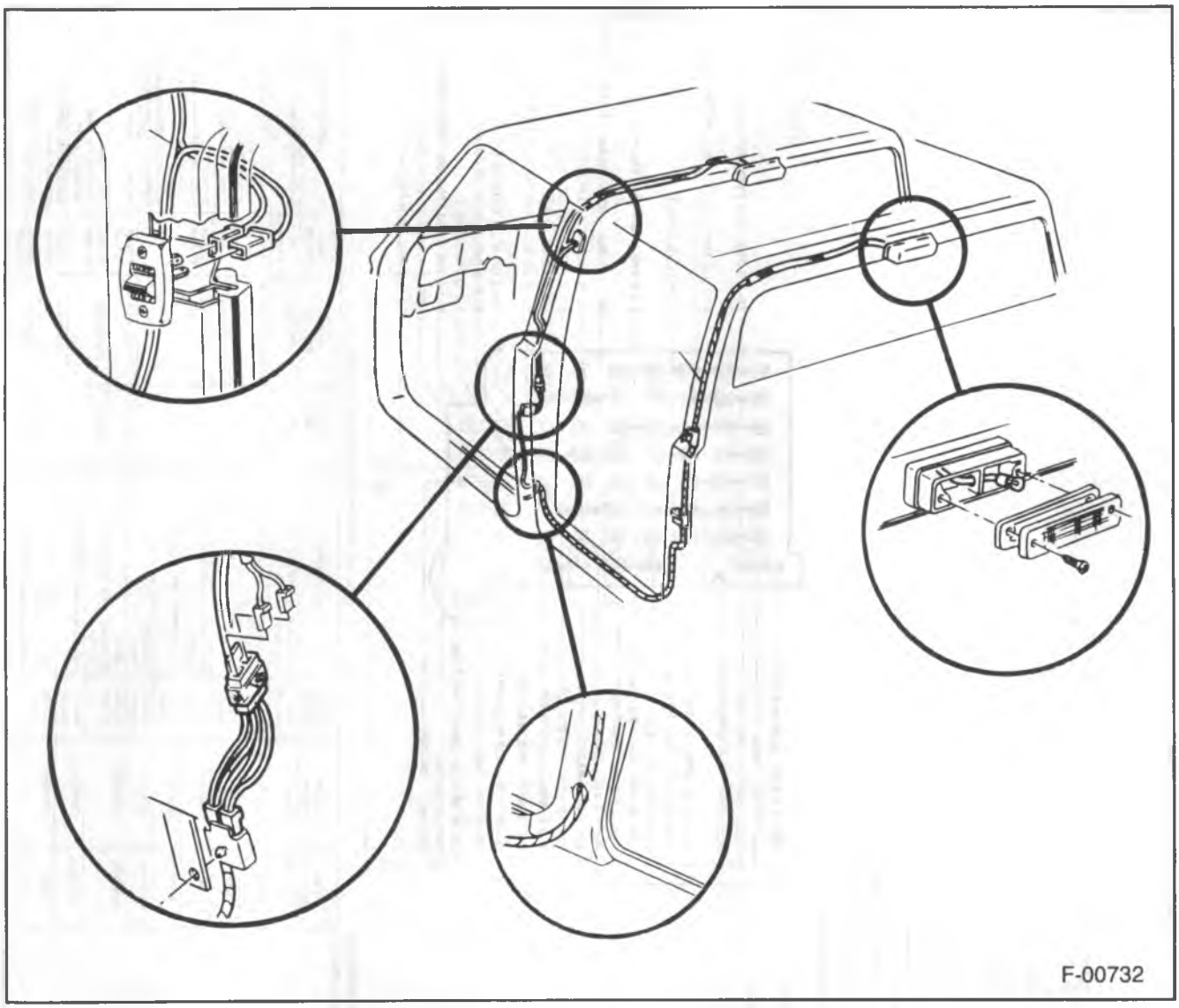

Figure 19—Cargo Lamp Harness

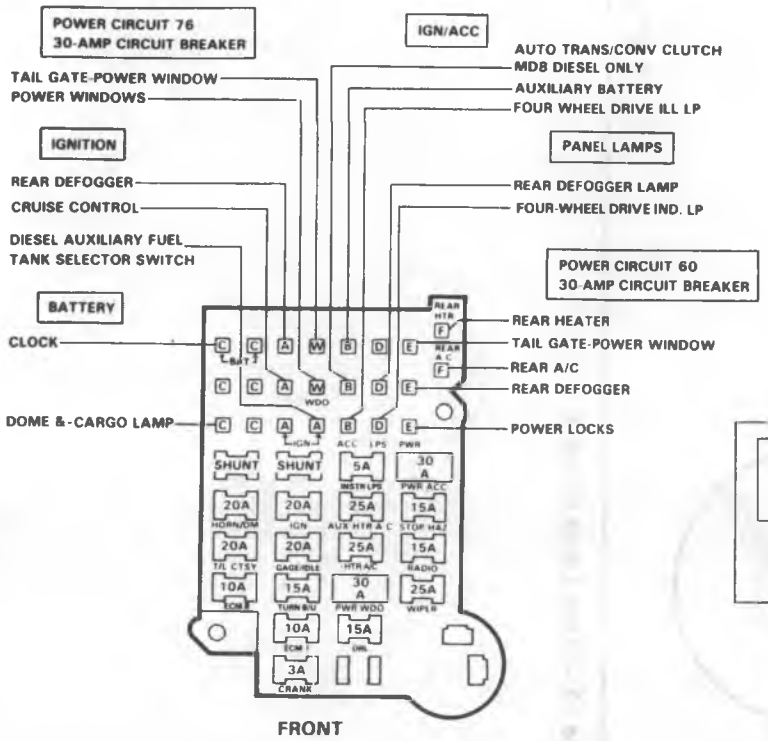

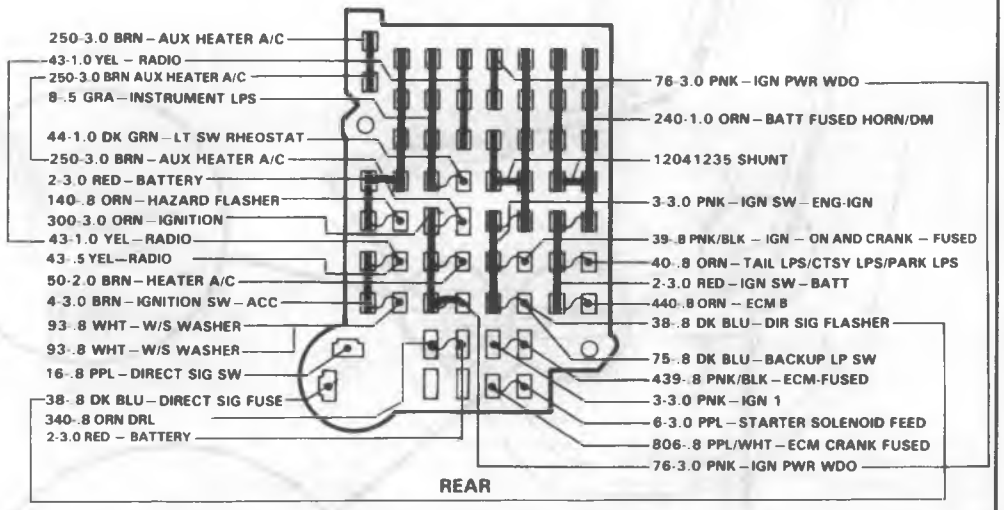

CAUTION: Determine if non-cycling circuit breakers are hot before removing them. Hot non-cycling circuit breakers can cause personal injury.

FUSE AND CIRCUIT BREAKER IDENTIFICATION

FUSE LOCATION	FUSE PART NO	COLOR AND AMPERE	DESCRIPTION
AUX HTR A/C	12004010	WHITE 25 AMP	AUXILIARY HEATER AND AIR CONDITIONING
CRANK	12004003	VIOLET 3 AMP	ELECTRONIC CONTROL MODULE CRANK CIRCUIT
DRL	12004008	LT BLUE 15 AMP	DAYTIME RUNNING LAMPS
ECM 1	12004007	RED 10 AMP	ELECTRONIC CONTROL MODULE IGNITION 1
ECM B	12004007	RED 10 AMP	ELECTRONIC CONTROL MODULE
GAGE/IDLE	12004009	YELLOW 20 AMP	IGNITION CRANK
HORN/DM	12004009	YELLOW 20 AMP	HORN DOME AND CARGO LAMPS CLOCK
HTR AC	12004010	WHITE 25 AMP	HEATER AND AIR CONDITIONING
IGN	12004009	YELLOW 20 AMP	REAR DEFOGGER CRUISE CONTROL DIESEL AUXILIARY FUEL TANK SELECTOR SWITCH

FUSE LOCATION	FUSE PART NO	COLOR AND AMPERE	DESCRIPTION
INSTR LPS	12004005	TAN 5 AMP	INSTRUMENT PANEL LAMPS
PWR ACC	(CIRCUIT BREAKER)	30 AMP	TAIL GATE POWER WINDOW REAR DEFOGGER POWER LOCKS
PWR WDO	(CIRCUIT BREAKER)	30 AMP	POWER WINDOWS
RADIO	12004008	LT BLUE 15 AMP	RADIO AUXILIARY BATTERY RELAY FOUR-WHEEL DRIVE INDICATOR LAMP AUTOMATIC TRANSMISSION CONVERTER CLUTCH (RPO MD8 ONLY)
STOP HAZ	12004008	LT BLUE 15 AMP	HAZARD FLASHER
T/L CTSY	12004009	YELLOW 20 AMP	TAILLAMPS COURTESY LAMPS PARKING LAMPS
TURN B/U	12004008	LT BLUE 15 AMP	DIRECTIONAL SIGNALS BACKUP LAMPS
WIPER	12004010	WHITE 25 AMP	WINDSHIELD WIPERS

Figure 20—R/V Fuse Block

V0450

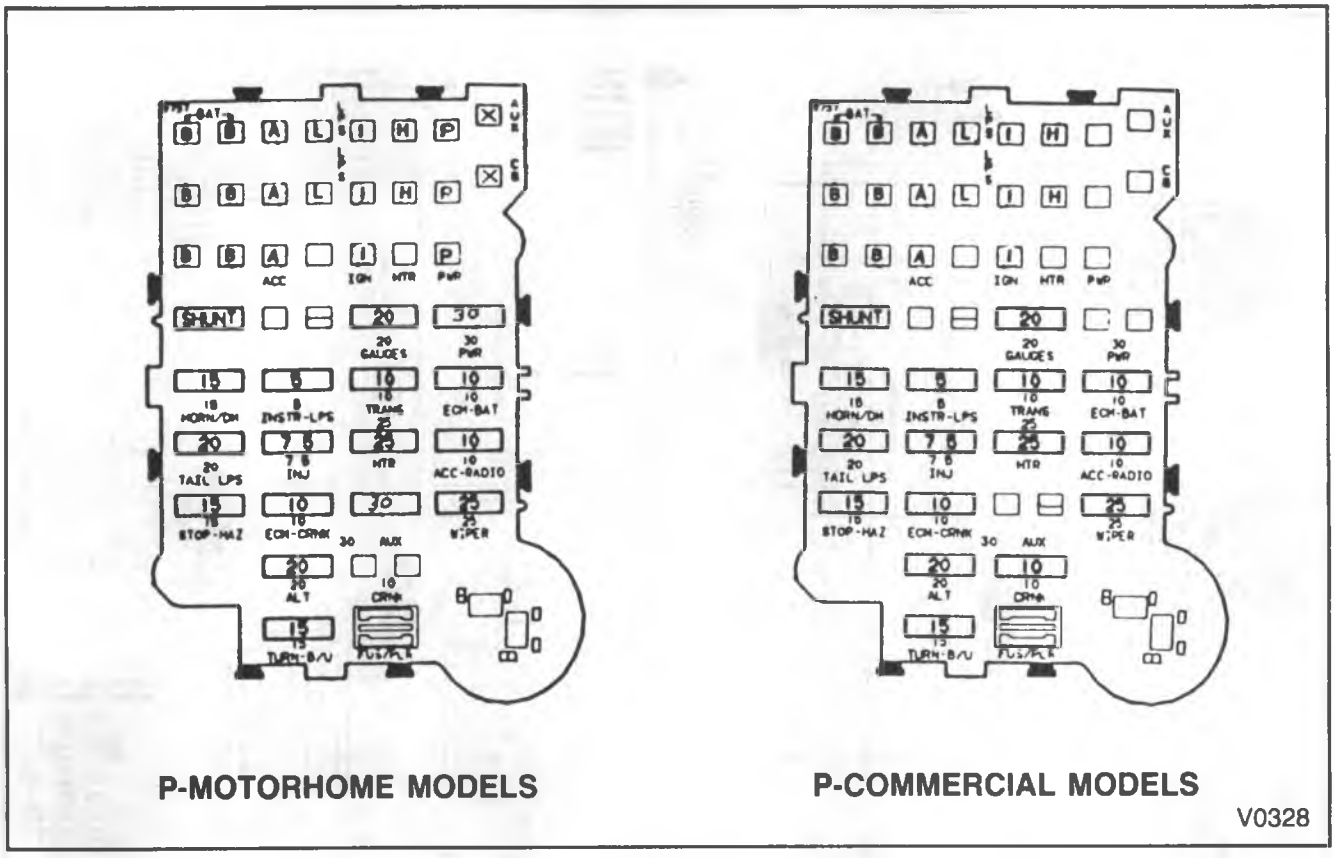

Figure 21—P-Model Fuse Block

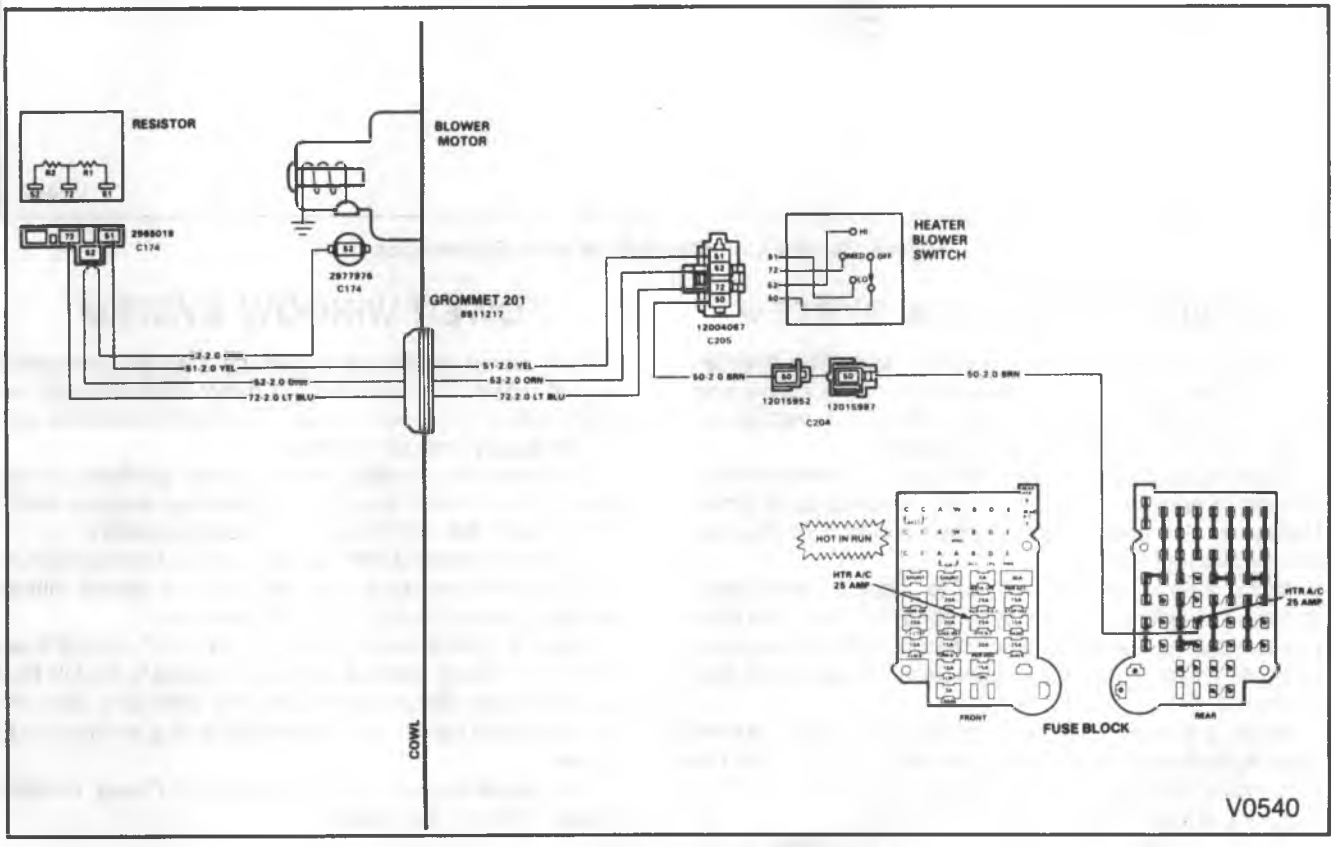

Figure 22—Heater Circuit Schematic

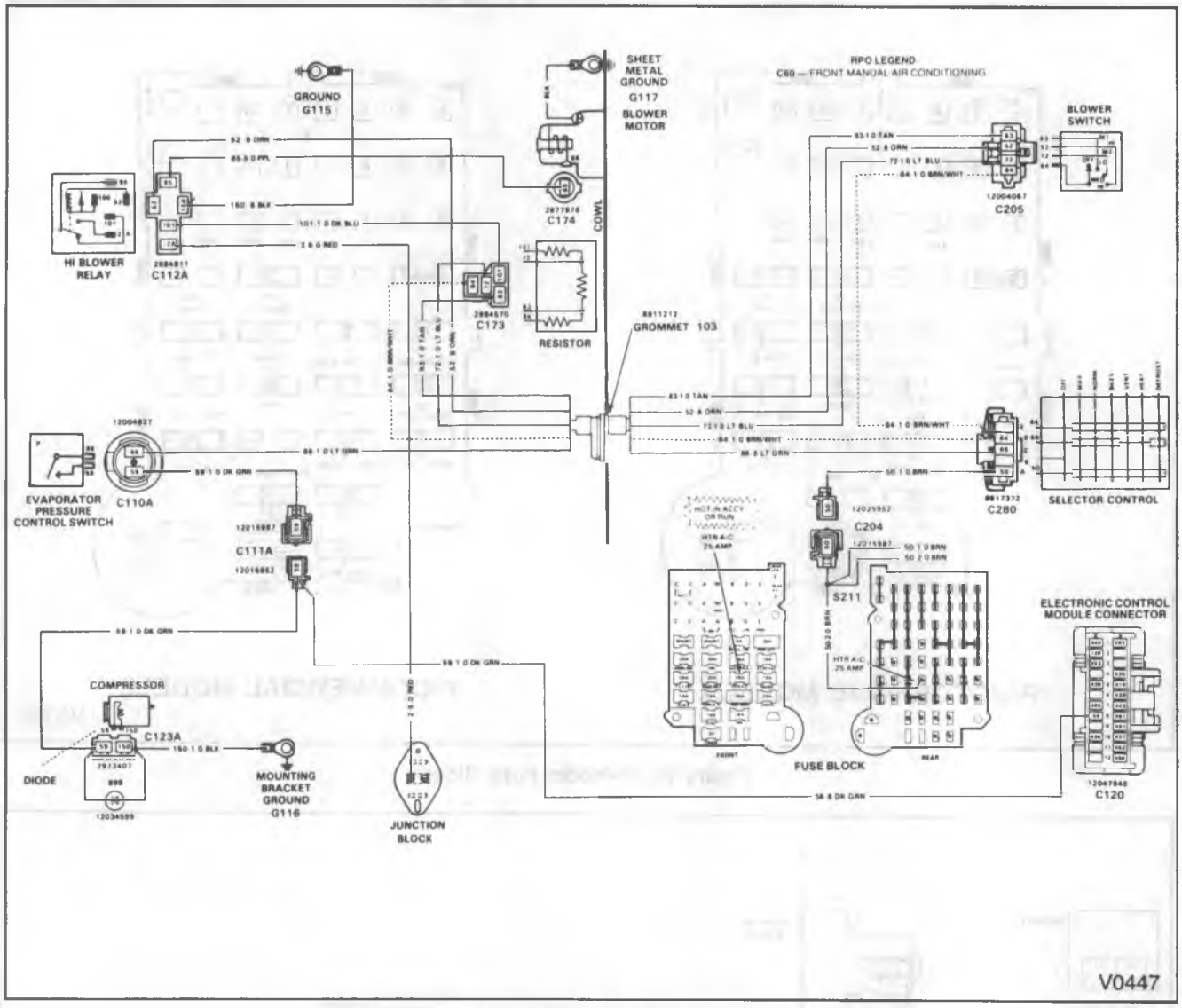

Figure 23—Air Conditioning System Schematics

POWER DOOR LOCK SYSTEM

Individual motors operate each door lock. The direction the motor turns depends on the polarity of the supply voltage. The door lock switches control the supply voltage polarity. Each switch will lock all the doors.

Each motor has a self-resetting circuit breaker built in. Voltage is present at the door lock switches at all times. Voltage is also present on the open contacts of the door lock relay at all times.

When a door switch is moved to "Lock," current flows through the switch and lock relay coil to ground. The relay closes, causing current to flow through the lock relay contacts, door lock motor, the unlock relay contacts, and then to ground.

When a door lock switch is moved to "Unlock," current flows through the switch, the unlock relay contacts, the door lock motor, the lock relay contacts, and to ground. This causes the lock motor to unlock the door.

For R/V models, the door lock relay is located on the dash panel, above the steering column.

For diagnosis, refer to "Diagnosis of Power Door Lock System" later in this section.

POWER WINDOW SYSTEM

Each power window is moved by a single permanent magnet motor. The direction the motor turns depends on the polarity of the supply voltage. The control switches control the supply voltage polarity.

Switches for controlling all the power windows are located at the driver's door. Each passenger window switch controls only the window at that seating position.

The motors have a self-resetting circuit breaker built in. The circuit breaker allows the motor to be stalled without damage. There are no travel-limit switches.

When a window switch is moved to "UP," current flows through the circuit breaker, the window switch, the DK BLU wire, the motor, the circuit breaker, the BRN wire, the "DN" contacts in the switch, and into the BLK wire which goes to ground.

For diagnosis, refer to "Diagnosis of Power Window System" later in this section.

HEATER SYSTEM CIRCUITS

Figure 22

The heater blower motor is controlled by the blower switch. The blower switch is a four position switch; off, low, medium and high. This switch controls the speed of the blower motor by connecting different resistances into the motor circuit, thereby dropping the voltage available to the motor.

The blower switch is located on the control assembly. The harness from the switch goes to the dash panel connector and into the engine compartment. The harness is then routed to the resistor block, which is located on the blower housing. From the resistor block, the harness then goes to the blower motor. The wire colors can be found in the wiring diagrams at the back of this manual.

For diagnosis and on-vehicle service of the heater blower circuit, refer to HEATING AND VENTILATION (SEC. 1A).

AIR CONDITIONING ELECTRICAL SYSTEM

Figure 23

The compressor electro-magnetic clutch is turned on and off by the pressure sensing switch. When the refrigerant pressure drops below a certain predetermined level, the switch opens the compressor clutch circuit, which causes the refrigeration system to stop working. The pressure sensing switch is located near the top of the accumulator.

For diagnosis of the A/C electrical system, refer to AIR CONDITIONING (SEC. 1B).

For air conditioning on-vehicle service, refer to AIR CONDITIONING (SEC. 1B).

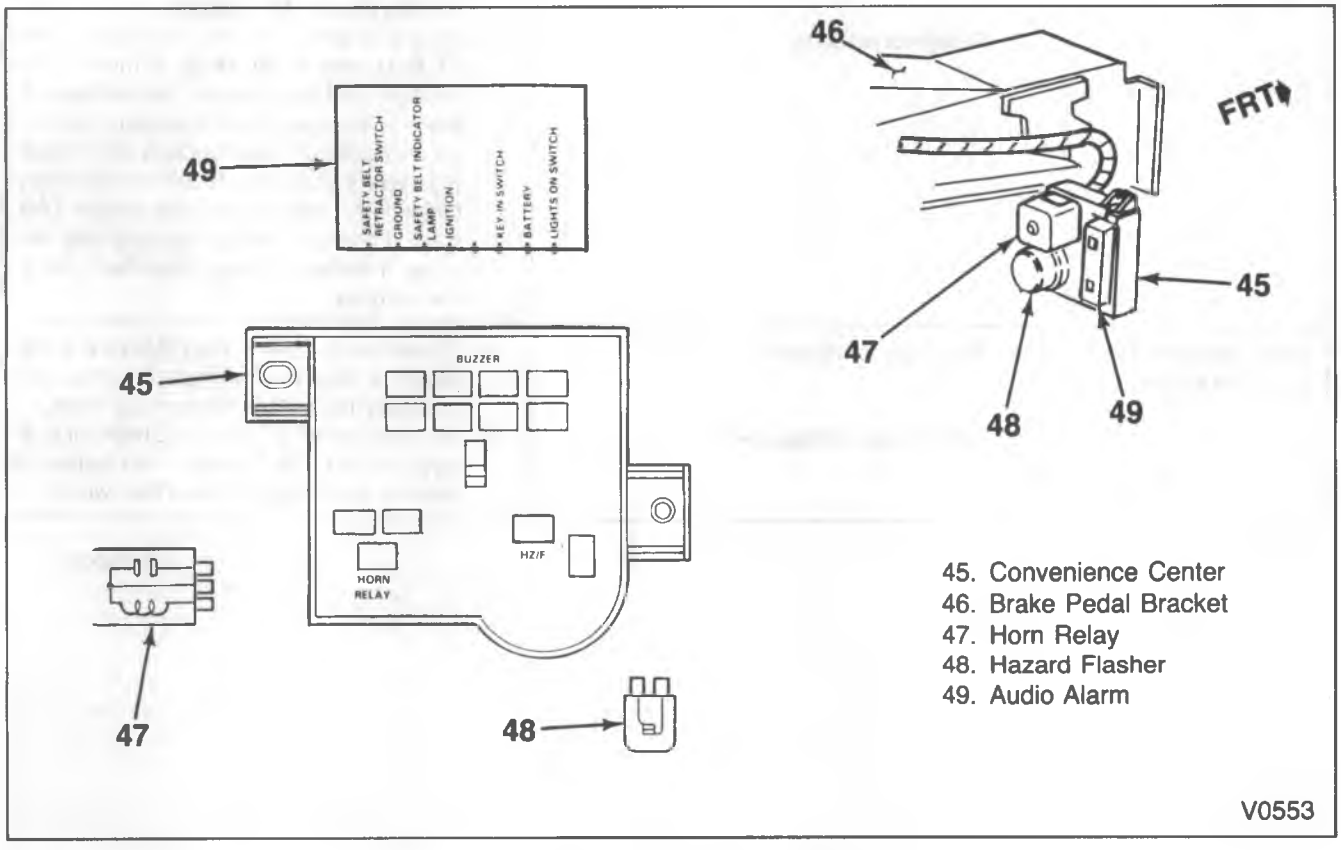

Figure 24—Convenience Center

DIAGNOSIS OF POWER DOOR LOCK SYSTEM

PROBLEM	POSSIBLE CAUSE	CORRECTION
One Door Lock Will Not Work.	1. No power at lock motor. 2. Open ground circuit between the motor and the relay.	1. Check for voltage at the lock motor. If no voltage at lock motor, check for voltage at the connector which is located at the front door hinge pillar. If there is no voltage at the connector, check for an open between the connector and the door lock relay. 2. Move a door switch to "Lock." Backprobe the TAN wire at the motor. If there is voltage, find the open between the motor and the relay.
None of the Door Locks Function; All Switches Tried.	1. No power. 2. Relay not working.	1. Check for power at the fuse block (ORN/BLK). Check for power at the door lock relay (ORN/BLK). If power is present at the fuse block but not present at the relay, find the open in the harness. 2. Hold a switch to "Lock." Backprobe the LT BLU wire at the relay. If there is no voltage, find the open in the harness. If there is voltage, check the relay case to ground path. If the ground is OK, check the relay coil for conduction. If the relay coil is OK, check for voltage on the TAN wire. If there is no voltage, replace the relay. If there is voltage, find the open in the harness.
One Switch Won't Lock the Doors.	1. No power to the switch. 2. Switch has internal open.	1. Check for voltage on the ORN wire at the switch. If there is no voltage, find the open between the switch and the fuse block. 2. Move the switch to "Lock." Check for voltage on the LT BLU wire at the switch. If there is no voltage, replace the switch.

GMTB-4003-A

DIAGNOSIS OF POWER WINDOW SYSTEM

PROBLEM	POSSIBLE CAUSE	CORRECTION
Passenger Window Will Not Work, Using Either Passenger Switch or Driver Switch.	1. No power at the passenger switch. 2. Passenger switch is not working. 3. Motor has an internal open.	1. Ignition switch at RUN. Check for voltage at the PNK wire on the passenger switch. If there is no voltage, find the open between the switch and the fuse block. 2. With the voltage on the PNK wire at the switch, move the switch to "UP." There should be voltage on the DK BLU wire at the switch. If there is no voltage on the DK BLU wire, replace the switch. 3. With the window switch moved to the "UP" position, check for voltage on the DK BLU wire at the motor. If there is no voltage, find the open between the switch and the motor. If there is voltage on the DK BLU wire, backprobe a jumper ground at the BRN wire at the motor. If the motor does not run, replace the motor. If the motor does run, find the open in the ground circuit. Note: the ground circuit does run back through the passenger window "DN" contacts and the driver window switch "DN" contacts before reaching ground.
Passenger Window Will Not Work Using the Passenger Switch. The Window Will Work Using the Driver Switch.	1. No power at the passenger switch. 2. Switch has internal open.	1. Check for voltage on the PNK wire at the passenger switch. If voltage is not present, find the open in the circuit between the switch and the I.P. harness connector. 2. If voltage is present, replace the switch.
Passenger Window Won't Work Using the Driver Switch.	1. No power. 2. Open in driver switch. 3. Open in harness.	1. Check driver window action. If the driver window works, power is at the switch. 2. With the driver switch moved to "UP," check for voltage on the DK BLU wire at the driver switch. If voltage is not present, replace the switch. 3. With voltage present on the DK BLU wire at the driver switch, find the open between the driver switch and the passenger switch.
Driver Window Won't Work. Passenger Window Works.	1. Switch won't work. 2. Motor has internal open. 3. Motor ground circuit is open.	1. Switch moved to "UP." Check for voltage at the DK BLU wire at the switch. If voltage is not present, replace the switch. 2. Switch moved to "UP." Check for voltage on the DK BLU wire at the motor. If voltage is present, backprobe a jumper ground at the BRN wire at the motor. If the motor won't run, replace the motor. 3. Backprobe a jumper ground at the BRN wire at the motor. Move the driver switch to "UP." If the motor runs, find the open in the ground circuit.

TB-3053-2A

ON-VEHICLE SERVICE

POWER DOOR LOCK MOTOR REPLACEMENT

Remove or Disconnect

1. Battery ground cable from battery.
2. Door trim panel. Refer to DOORS (SEC. 10A1).
3. Motor. Refer to DOORS (SEC. 10A1).

Install or Connect

1. Motor. Refer to DOORS (SEC. 10A1).
2. Door trim panel. Refer to DOORS (SEC. 10A1).
3. Battery ground cable to the battery.

POWER DOOR LOCK SWITCH REPLACEMENT

Remove or Disconnect

1. Battery ground cable from the battery.
2. Door trim panel. Refer to DOORS (SEC. 10A1).
3. Switch connector retaining nut.
4. Switch connector.
5. Switch.
   - Press in both retaining tabs at the same time.

Install or Connect

1. Switch.
2. Switch connector.
3. Switch connector retaining nut.
4. Door trim panel. Refer to DOORS (SEC. 10A1).
5. Battery ground cable to the battery.

POWER WINDOW MOTOR REPLACEMENT

Remove or Disconnect

1. Battery ground cable from the battery.
2. Door trim panel. Refer to DOORS (SEC. 10A1).
3. Motor. Refer to DOORS (SEC. 10A1).

Install or Connect

1. Motor. Refer to DOORS (SEC. 10A1).
2. Door trim panel. Refer to DOORS (SEC. 10A1).
3. Battery ground cable to the battery.

POWER WINDOW SWITCH REPLACEMENT

Remove or Disconnect

1. Battery ground cable from the battery.
2. Door trim panel. Refer to DOORS (SEC. 10A1).
3. Switch connector retaining nut.
4. Switch connector.
5. Switch.
   - Press in both retaining tabs at the same time.

Install or Connect

1. Switch.
2. Switch connector.
3. Switch connector retaining nut.
4. Door trim panel. Refer to DOORS (SEC. 10A1).
5. Battery ground cable to the battery.

CONVENIENCE CENTER (R/V MODELS)

The horn relay (47), hazard flasher (48) and audio alarm relay (49) are located in the convenience center (45) (figure 24).

The convenience center is located on a bracket which is bolted to the brake pedal bracket (46) to the right of the steering column.

Relays are replaced simply by pulling the necessary relay out of the convenience center, and plugging in a new one.

SECTION 8B
LIGHTING SYSTEMS

NOTICE: When fasteners are removed, always reinstall them at the same location from which they were removed. If a fastener needs to be replaced, use the correct part number fastener for that application. If the correct part number fastener is not available, a fastener of equal size and strength (or stronger) may be used. Fasteners that are not reused, and those requiring thread locking compound will be called out. The correct torque value must be used when installing fasteners that require it. If the above conditions are not followed, parts or system damage could result.

CONTENTS

SUBJECT	PAGE
Front Lighting Systems Description	8B- 2
Headlamp Systems	8B- 2
Daytime Running Lamp Systems (DRL) - (Canada)	8B- 2
Front Parking Lamp Systems	8B- 3
Front Side Marker Lamp Systems	8B- 3
Rear Lighting Systems Description	8B- 5
Rear Running Lamps And Marker Lamps	8B- 5
Rear Park Lamps	8B- 5
Rear Turn, Stop And Hazard Systems	8B- 5
Backup Lamp System	8B- 5
Trailer Wiring	8B- 7
Four-Wheel Drive Indicator Lamp	8B- 8
Diagnosis	8B-10
Headlamps	8B-10
Daytime Running Lamp System (DRL) - (Canada)	8B-10
Front Parking Lamps	8B-19
Front Side Marker Lamps	8B-19
Rear Side Marker Lamps	8B-20
Running, Park and License Lamps	8B-20
Turn Signal and Hazard Systems	8B-21
Stop Lamp System	8B-22
Backup Lamp System	8B-23
Dome Lamp (Without Lamp Group)	8B-24
Cargo and Underhood Lamp Circuits	8B-26
Four-Wheel Drive Indicator Lamp	8B-29
On-Vehicle Service	8B-33
Headlamp Unit Replacement	8B-33
Headlamp Adjustment	8B-33
Headlamp Switch Replacement	8B-34
Dimmer Switch Replacement	8B-35
Front Parking Lamp Replacement	8B-35
Front Side Marker Lamp Replacement	8B-36
Taillamp Bulb Replacement	8B-36
Rear Lamp Housing and Seal Replacement	8B-36
License Plate Lamp Replacement	8B-36
Rear Marker Lamp Bulb Replacement	8B-36
Backup Switch Replacement	8B-37
Tailgate Lamp Assembly and Bulb Replacement	8B-37
Door Jamb Switch Replacement	8B-40
Dome Lamp Assembly Replacement	8B-40
Cargo Lamp Assembly Replacement	8B-40
Cargo Lamp Switch Replacement	8B-41
Overhead Console Replacement	8B-41
Overhead Console Bulb Replacement	8B-41
Front Floor Compartment Assembly Replacement	8B-43
Underhood Reel-Type Lamp Replacement	8B-43
Underhood Reel-Type Lamp Bulb Replacement	8B-44
Four Wheel Drive Shift Indicator Bulb Replacement	8B-44
Four Wheel Drive Indicator Bulb Replacement	8B-44
Wiring Harness Location	8B-46

CONTENTS (CONT.)

Specifications 8B-52
R/V Model Fuses 8B-52
P Model Fuses 8B-53
Circuit Breakers 8B-54
Lamps 8B-55
Special Tools 8B-57

FRONT LIGHTING SYSTEMS DESCRIPTION

The front lighting system includes the headlamps, the front parking lamps, and the front side marker lamps. The circuit starts at the fuse block and goes to the light switch in the instrument panel. From the light switch the circuit goes to the dash panel connector and then to the front lamps (figures 1 and 2).

HEADLAMP SYSTEM

The headlamp circuit starts at the battery positive terminal, goes through a circuit breaker in the light switch and to the switch itself, then to the dimmer switch, and finally forward to the headlamps (figure 1).

The headlamp system has two options. One option is two headlamps, each having a parking lamp located under it. The other option is four headlamps, with the parking lamp located underneath also. On the four headlamp option, when the low beam circuits are energized, only the outboard headlamps will be on. When the high beam circuit is energized, the inboard headlamps will turn on while the outboard headlamps remain dimly lit (Refer to figures 3 and 4.).

DAYTIME RUNNING LAMP SYSTEMS (DRL) – (CANADA)

All vehicles built to be sold in Canada are required by law to be equipped with a Daytime Running Lamp (DRL) system. The DRL system is activated any time the ignition key is in the run position, and the parking brakes are not applied. The DRL system is also bypassed when the headlamps are turned on by use of the headlamp switch.

On R/V and P models with a two headlamp system, the highbeam circuit is energized at half voltage, causing the lamps to be dimly lit. On a four headlamp circuit, the high beams will be dimly lit, while the low beams will be lit even dimmer.

Any time the parking brakes are applied, a grounding switch located at the parking brake pedal mechanism turns the DRL system off. When the parking brakes are released, the DRL system becomes activated and the headlamps will be re-energized.

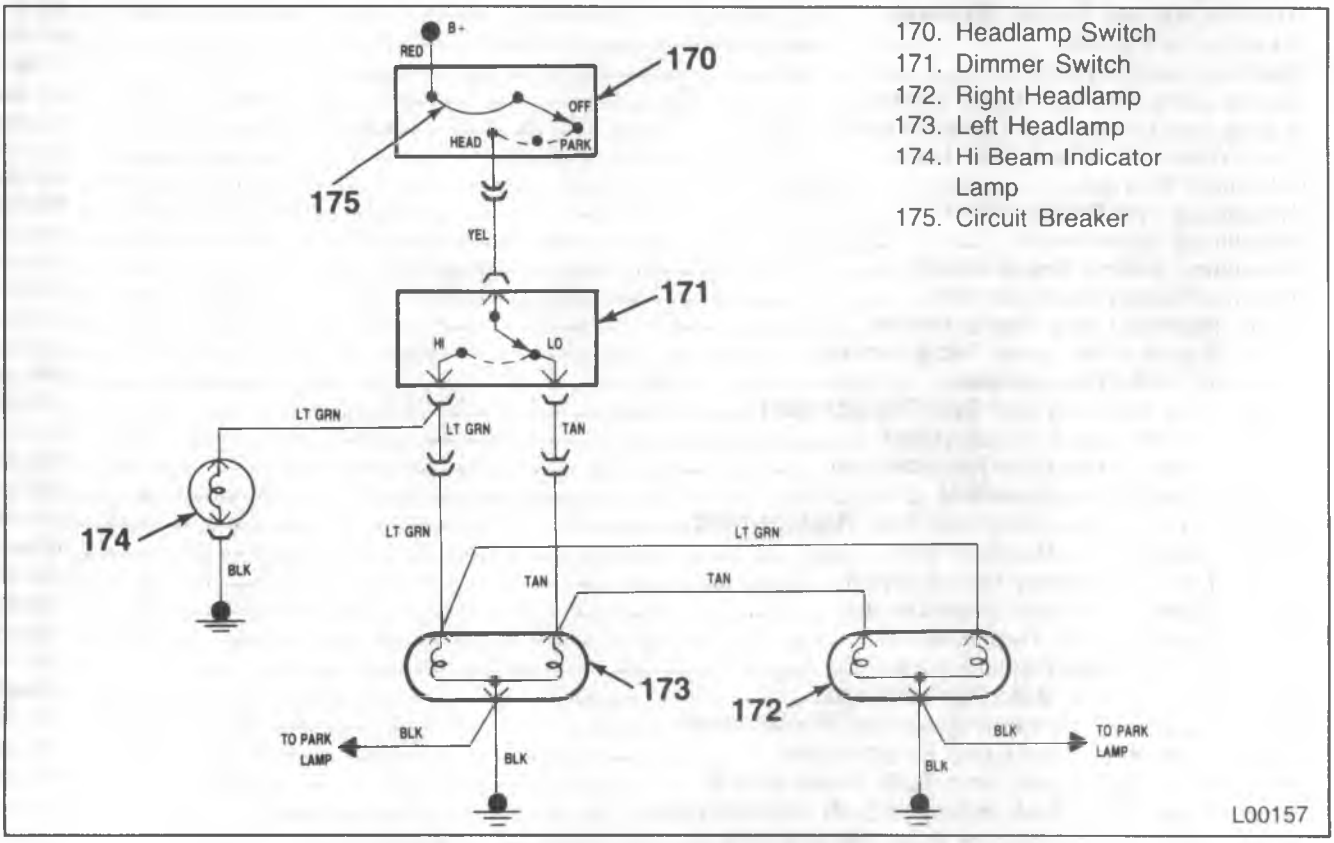

Figure 1 – Headlamp System Schematic

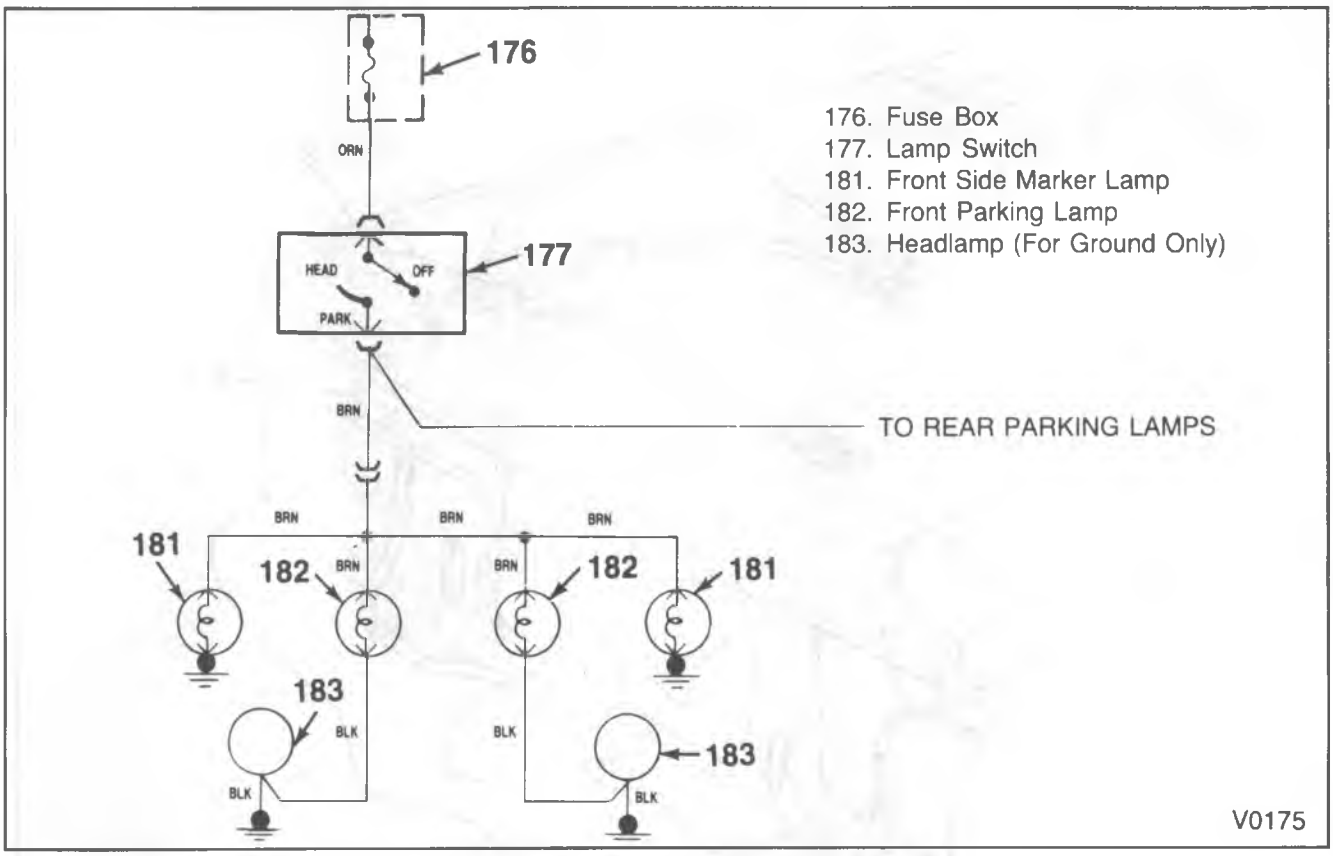

Figure 2—Front Parking Lamp Schematic

A DRL module controls the voltages used to operate the system, while a relay, located on the left inner fender panel, controls the current path. There is also a telltale on the instrument panel which is illuminated whenever the DRL system is activated.

FRONT PARKING LAMP SYSTEM

The front parking lamps circuit is in the headlamp harness. The circuit starts from the fuse block, goes to the lamp switch, and then forward to the front parking lamps (figure 2). The circuit also includes the rear parking lamps, which are covered later in this section. The parking lamp system is turned on when the lamp switch is pulled out to the first detent.

FRONT SIDE MARKER LAMP SYSTEM

The front side marker lamp circuit is included in the headlamp harness. The circuit starts at the lamp switch. It goes to the dash panel connector and out to the front side marker lamps. The circuit also branches at the lamp switch and goes to the rear side marker lamps. This part of the circuit is covered later in this section.

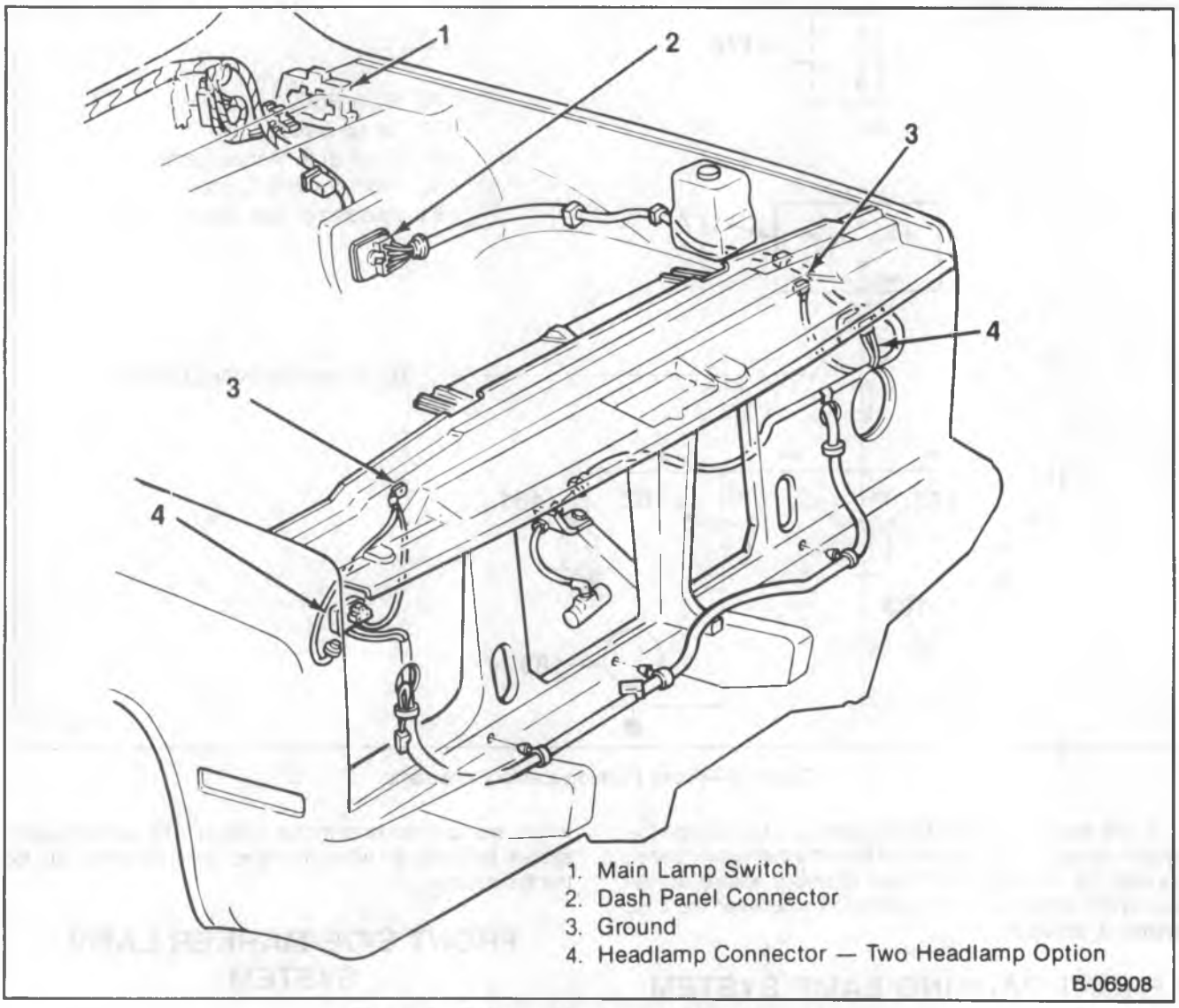

Figure 3—R/V Two Headlamp Wiring Harness

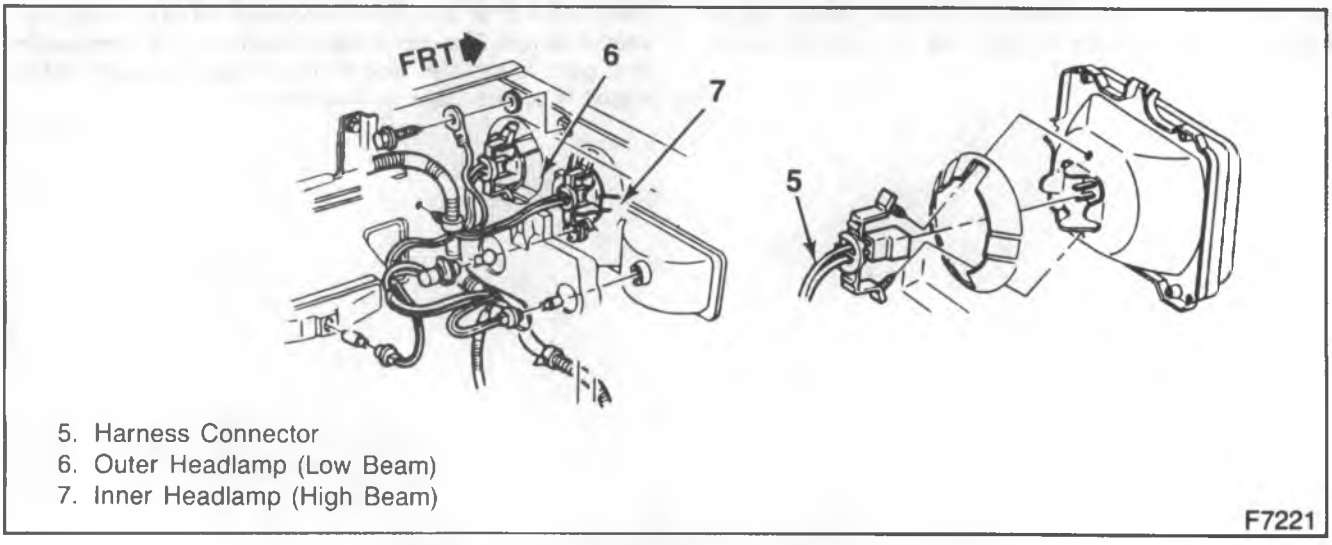

Figure 4—R/V Four Headlamp Wiring Harness

REAR LIGHTING SYSTEMS DESCRIPTION

The rear lighting systems contain the circuits for the running, park, turn, stop and license lamps. One bulb may function for more than one circuit. The harness for the rear lighting systems starts at the fuse block, goes to the various switches and then back along the left frame to the various lamps (figures 5, 6 and 7).

REAR RUNNING LAMPS AND MARKER LAMPS

This circuit starts at the lamp switch. The lamps will be on when the lamp switch is in the first and second detents. The front park lamps and front marker lamps will also be on when the lamp switch is in the first detent (figure 5).

REAR PARK LAMPS

These lamps will be on when the lamp switch is in the first detent. The front park lamps will also be on. The side marker lamps will also be on (figure 5).

REAR TURN, STOP AND HAZARD SYSTEMS

These three systems use the same bulb in the rear lamps. When the rear turn system is turned on, a thermal oscillator is turned on, which causes the system to flash. The front park lamps are also a part of the turn system.

The stop lamp system is turned on by a brake switch closing. The two rear bright lamps are then turned on (figure 7).

The hazard system is turned on by the hazard switch. The hazard system thermal oscillator is then turned on which causes the front park lamps and the rear bright lamps to flash (figure 6).

BACKUP LAMP SYSTEM

This circuit is turned on when the transmission is shifted into reverse. The backup switch is closed, thus turning on the backup lamps. The backup lamps are located in the rear lamp assemblies (figure 8).

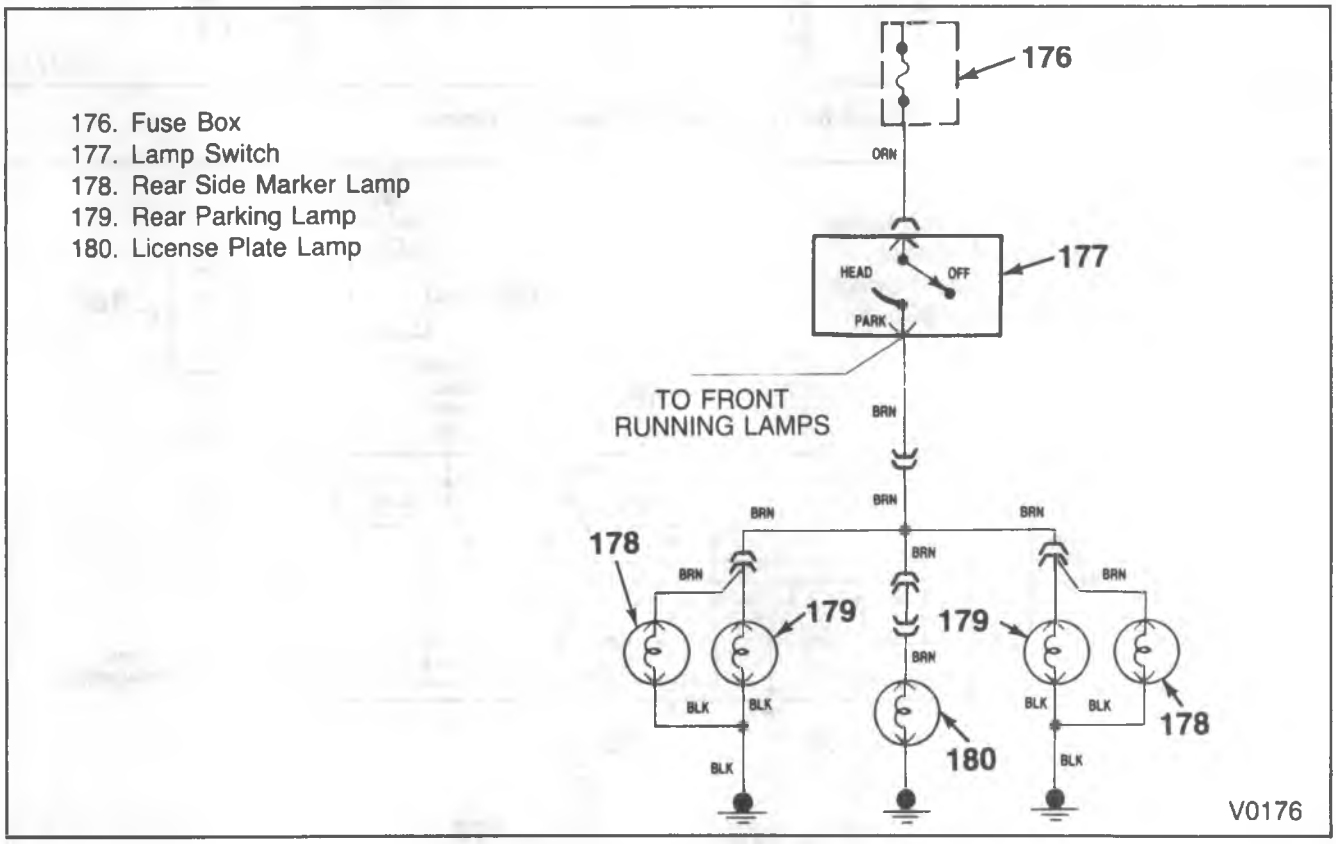

Figure 5—Parking Lamp System Schematic, Rear Only

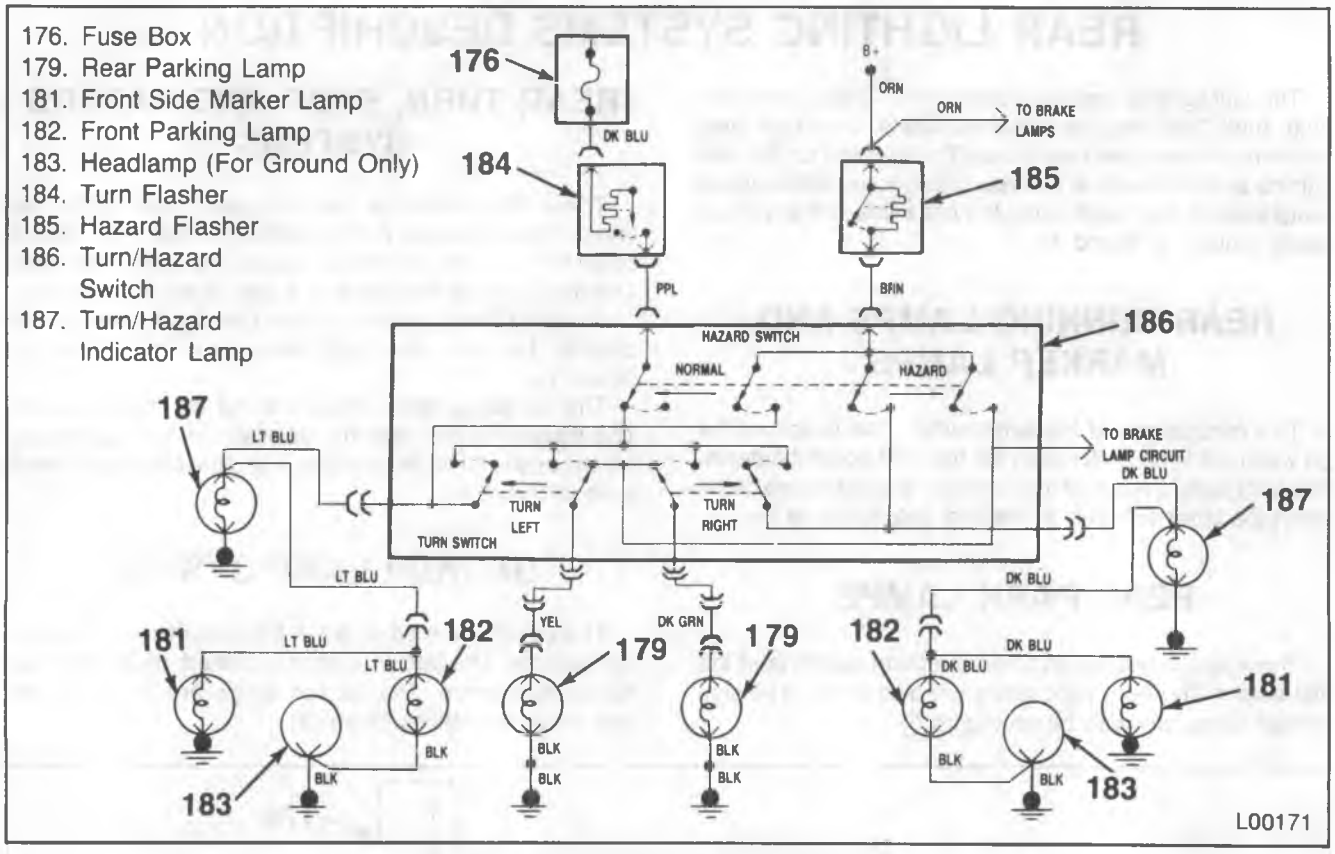

Figure 6—Turn/Hazard Schematic, Typical

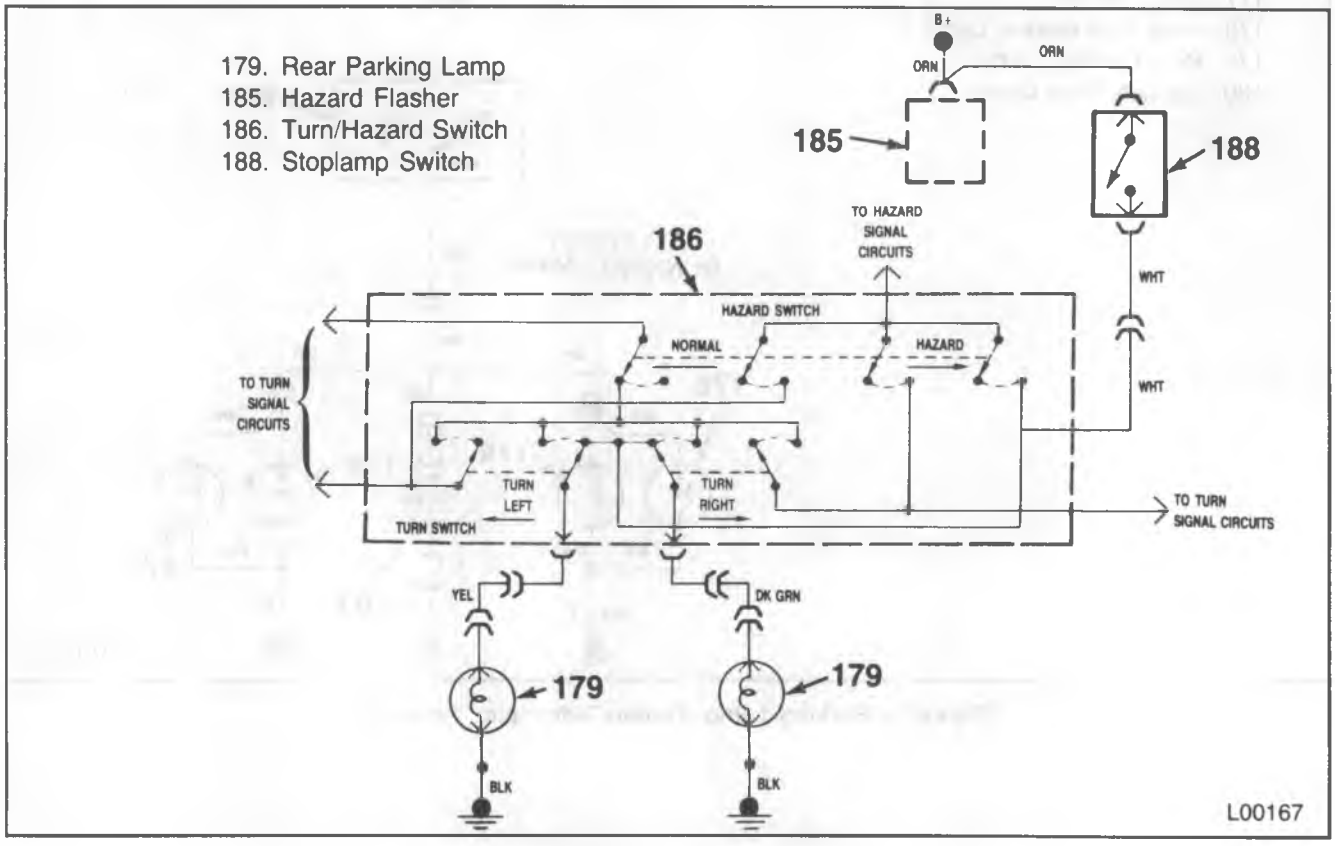

Figure 7—Stop Lamps Schematic

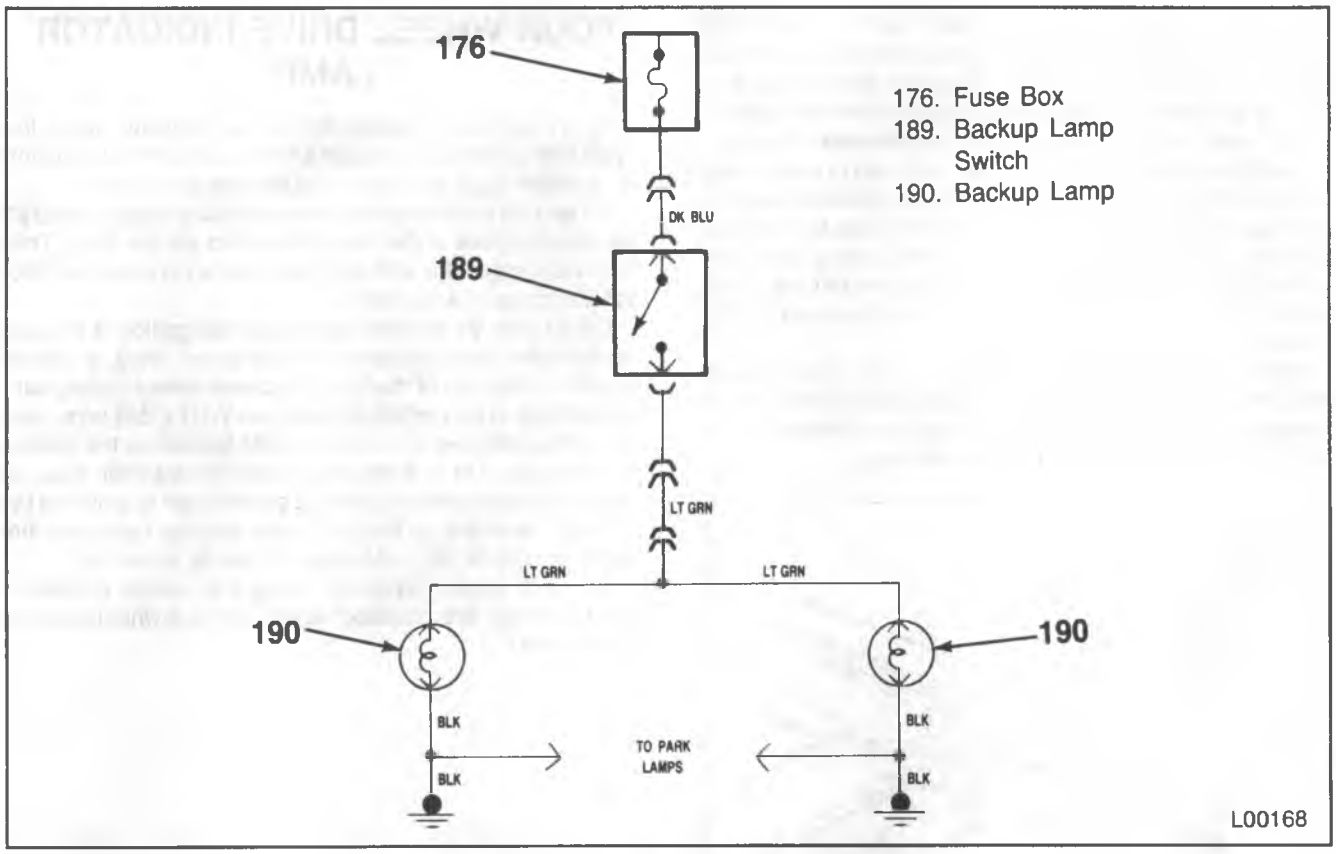

Figure 8—Backup Lamps Schematic

TRAILER WIRING

R/V-MODELS

There is one type of trailer harness available. Option UY7 is a heavy duty trailer harness. One portion of the harness is a 30 amp fused battery feed wire from the junction block mounted on the cowl. This harness is routed along the vehicle frame rail to the rear bumper crossmember. The rest of the trailer harness is spliced from the rear lamp harness. This harness is located at the rear of the left frame rail, and is wrapped and bound with a plastic strap on all pickup models. The harness is located on the frame crossmember nearest the rear bumper on the utility vehicle. The wires are taped over the harness to prevent shorting of the wires.

This option does not include a connector at the end of the harness, and must be wired after production by a qualified service person (figures 9 and 10).

The five wires included in the harness are:

1. White — Ground.
2. Brown — Tail lamps.
3. Light Green — Back up lamps.
4. Dark Green — Right turn signal, and stop lamp.
5. Yellow — Left turn signal, and stop lamp.

The second wire (the 30 amp fused battery feed) must also be wired after production. The function of this wire may vary depending on application. This red wire is taped to prevent accident grounding which would blow the fuse.

The trailer harness wiring should be attached to the trailer, and then strapped to the vehicle frame rail in such a way that enough slack is left in the harness to prevent bending, binding, or breakage of the wiring. Do not allow the harness to be so loose, that it drags on the ground. Tape or strap the trailer portion of the harness (if used) to the tongue of the trailer. This will prevent the harness from dragging on the ground.

When the wiring is not being used, wrap the harness together, and bind it with a tie strap to keep it from being damaged. Store the harness behind the rear bumper on the left hand frame rail with a band or tie strap.

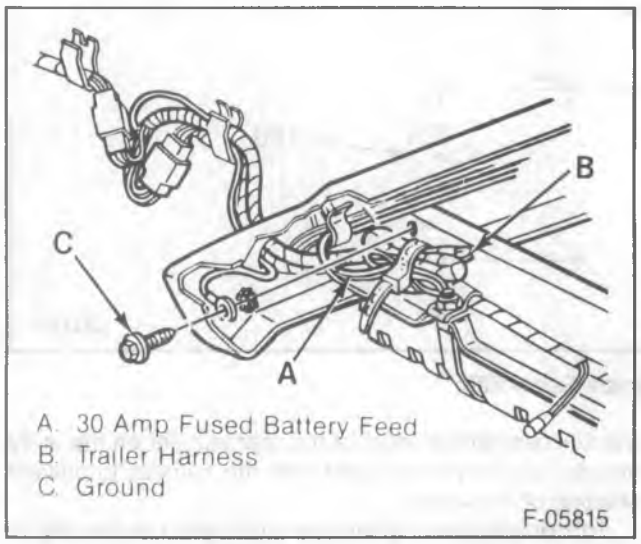

Figure 9—R/V Pickup—Trailering Harness

FOUR-WHEEL DRIVE INDICATOR LAMP

All V-models are equipped with an indicator lamp located in the instrument cluster which is turned on whenever the transfer case is shifted into four-wheel drive.

V1 and V2 models also have an indicator lamp located at the transfer case shifter bezel mounted on the floor. This lamp illuminates the shift indicator and is on whenever the parking or headlamps are on.

On V1 and V2 models, whenever the ignition is on and the transfer case engages into four-wheel drive, a switch located on the top of the transfer case closes causing battery voltage to be applied through the WHT (156) wire then to the four-wheel-drive indicator light located in the instrument cluster. On V-3 models, when the transfer case is engaged into four-wheel-drive, a ground path is provided by a switch mounted on the top of the transfer case and the indicator light in the instrument cluster is turned on.

Anti-lock braking systems, along with torque converter clutch lock-up are disabled whenever four-wheel-drive is being used.

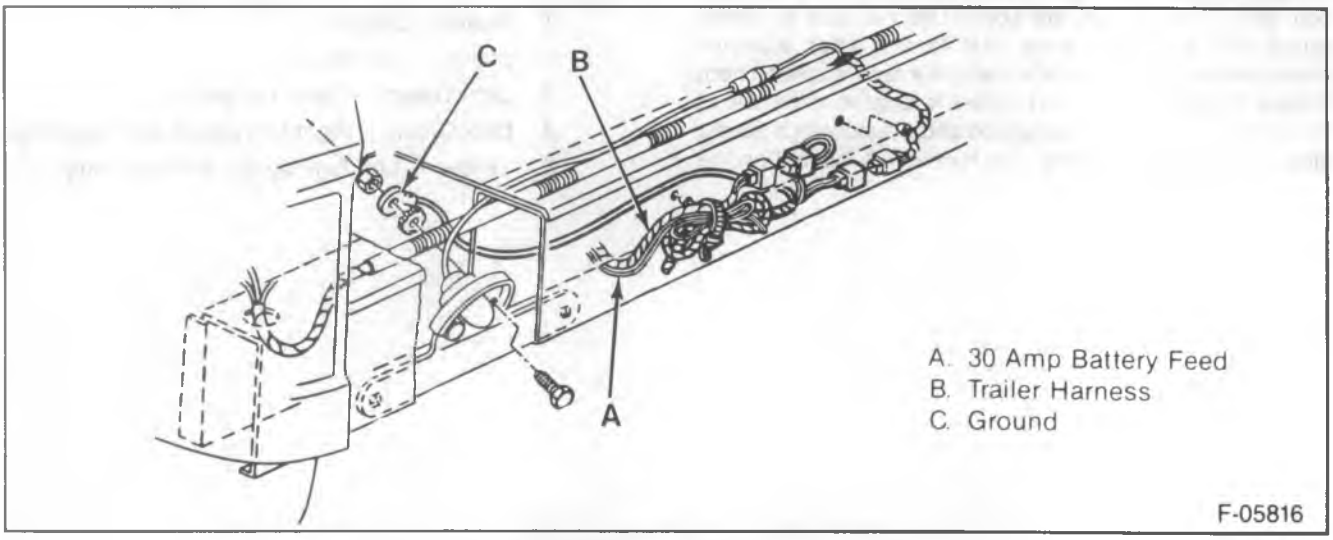

Figure 10—R/V Utility Vehicle—Trailering Harness

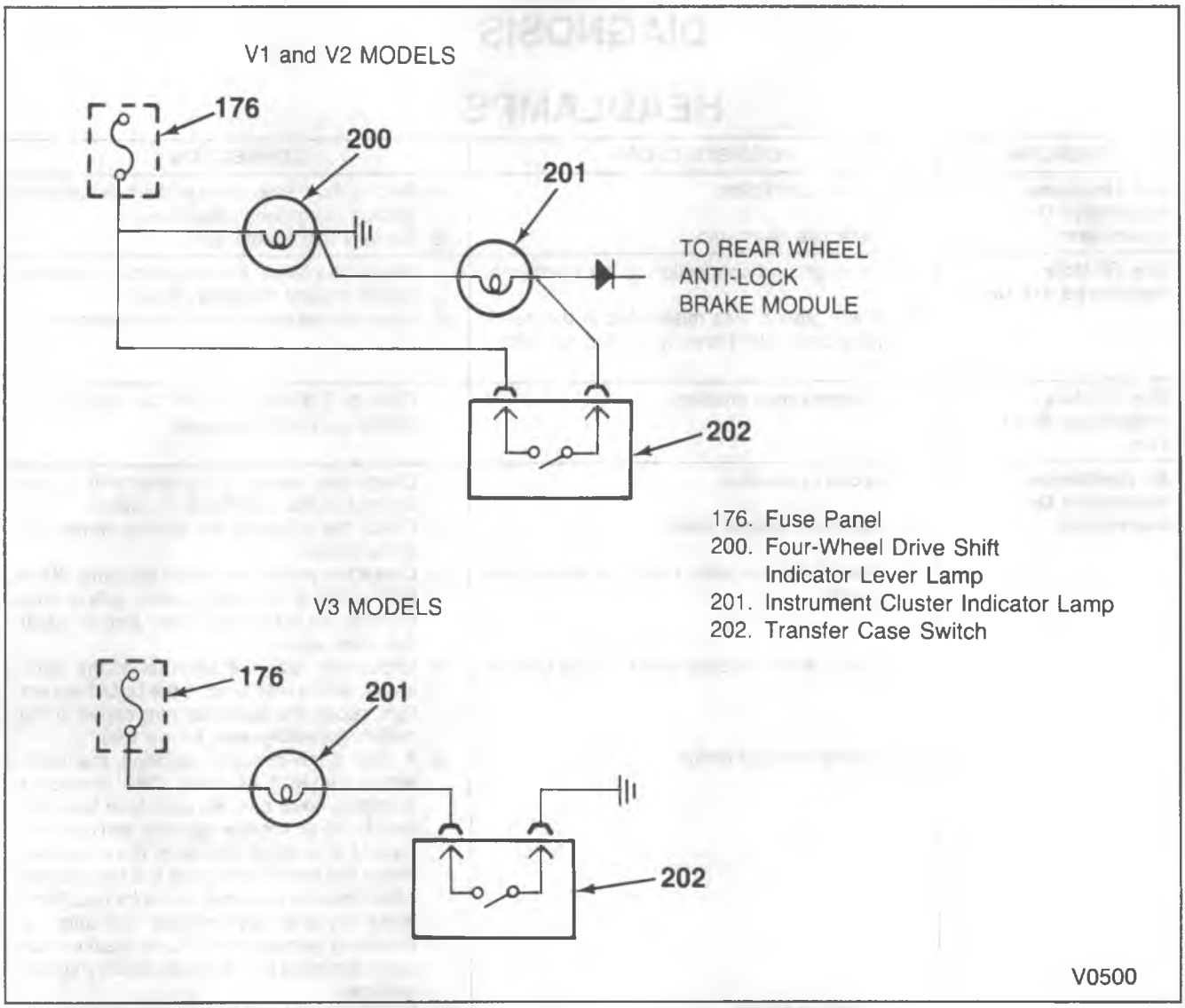

Figure 11—Four-Wheel Drive Indicator Lamp Schematics

DIAGNOSIS

HEADLAMPS

PROBLEM	POSSIBLE CAUSE	CORRECTION
One Headlamp Inoperative Or Intermittent.	1. Loose connection. 2. Defective headlamp.	1. Secure the connections to the headlamp including the ground (black wire). 2. Replace the headlamp.
One Or More Headlamps Are Dim.	1. Open ground connection at the headlamp. 2. Black ground wire mislocated in the headlamp connector (three-wire, hi-lo, connector only).	1. Repair the black wire connection between headlamp and the body ground. 2. Relocate the black wire in the connector.
One Or More Headlamps Short Life.	Charge circuit problem.	Refer to ENGINE ELECTRICAL (SEC. 6D), charging system diagnosis.
All Headlamps Inoperative Or Intermittent.	1. Loose connection. 2. Defective dimmer switch. 3. Open wiring — lamp switch to the dimmer switch. 4. Open wiring — lamp switch to the battery. 5. Shorted ground circuit. 6. Defective switch.	1. Check and secure the connections at the dimmer switch and the lamp switch. 2. Check the voltage at the dimmer switch with a test lamp. 3. Check the yellow wire with a test lamp. If the bulb lights at the lamp switch yellow wire terminal but not at the dimmer switch, repair the open wire. 4. Check the red wire terminal at the lamp switch with a test lamp. If the bulb does not light, repair the open red wire circuit to the battery (possible open fusible link). 5. If, after a few minutes operation, the headlamps flicker "ON" and "OFF" and/or a thumping noise can be heard from the lamp switch (circuit breaker opening and closing), repair the short to ground in the circuit between the lamp switch and the headlamps. After repairing the short, check for headlamp flickering after one minute operation. If flickering occurs, the circuit breaker has been damaged and the lamp switch must be replaced. 6. Check the red and yellow wire terminals at the lamp switch with test lamp. If the bulb lights at the red wire terminal but not at the yellow terminal, replace the lamp switch.
Upper Or Lower Beam Will Not Light Or Intermittent.	1. Open connection or defective dimmer switch. 2. Short circuit to ground.	1. Check the dimmer switch terminals with a test lamp. If the bulb lights at the light green or tan wire terminals, repair the open wiring between the dimmer switch and the headlamps. If the bulb will not light at either of these terminals, depending upon switch position, replace the dimmer switch. 2. Follow the diagnosis above (all headlamps inoperative or intermittent).

GMTB-0159-2L

DAYTIME RUNNING LAMP SYSTEM (DRL) – (CANADA)

PRELIMINARY CHECKS

Before checking the Daytime Running Light system, do the following:

1. Place the parking brake in the OFF position.
2. Be sure the dome lamps are working properly. If not, repair as required.
3. Place the headlamp switch in the ON position and the dimmer switch in the HIGH BEAM position. If high beams are inoperative, repair as required before any further diagnosis. If high beams work properly, turn the headlights off and proceed with system diagnostic checks as shown below.

DAYTIME RUNNING LAMPS DO NOT OPERATE (CANADA ONLY) (R/V MODELS)

TEST	RESULT	ACTION
1. CHECK condition of DRL (daytime running lamp) fuse.	Fuse is not blown.	GO to step 2.
	Fuse is blown.	LOCATE and REPAIR source of overload. Then, REPLACE fuse.
2. Connect a test lamp from ORN (240) wire at daytime running lamp relay connector C126A to ground.	Test lamp lights.	GO to step 3.
	Test lamp does not light.	LOCATE and REPAIR open in ORN (240) wire from relay connector C126A to C125A and/or ORN (340) wire between C125A to fuse block.
3. CHECK condition of GAGE/IDLE fuse.	Fuse is not blown.	GO to step 4.
	Fuse is blown.	LOCATE and REPAIR source of overload. Then, REPLACE fuse.
4. Disconnect the daytime running lamp module connector C211A and place the ignition switch to RUN. Connect a test lamp from PNK/BLK (39) wire at the daytime running lamp relay connector C126A to ground.	Test lamp does not light.	LOCATE and REPAIR open in PNK/BLK (39) wire from relay connector to fuse block.
	Test lamp lights.	GO to step 5.
5. Connect a test lamp from LT GRN/BLK (592) wire at daytime running lamp relay connector C201 to ground.	Test lamp does not light.	REPLACE daytime running lamp relay switch.
	Test lamp lights.	GO to step 6.
6. Connect a J 34029-A multimeter from LT GRN/BLK (592) wire at daytime running lamp module connector C211A to ground. Measure voltage.	No voltage.	LOCATE and REPAIR open in LT GRN/BLK (592) wire from daytime running lamp module connector to daytime running lamp relay connector C126A
	Battery voltage.	GO to step 7.
7. Connect a J 34029-A multimeter (or equivalent) from PNK/BLK (39) wire at daytime running lamp module connector C211A to ground. Measure voltage.	No voltage.	LOCATE and REPAIR open in PNK/BLK (39) wire from module connector to fuse block.
	Battery voltage.	GO to step 9.
8. Connect J 34029-A multimeter from LT GRN/BLK (592) wire to BLK (150) wire at module connector C211A.	No voltage.	LOCATE and REPAIR open in BLK (150) wire from module connector to ground G200.
	Battery voltage.	REPLACE daytime running lamp module. If daytime running lamps still are inoperative, also REPLACE daytime running lamp relay switch.

DAYTIME RUNNING LAMPS STAY ON (CANADA ONLY) (R/V MODELS)

TEST	RESULT	ACTION
Disconnect daytime running lamp module connector C211A. Place ignition switch to RUN and headlamp switch to ON position. Connect a J 34029-A multimeter to YEL (10) wire from module connector to ground. Measure voltage.	Battery voltage.	REPLACE daytime running lamp module.
	No voltage.	LOCATE and REPAIR open in YEL (10) wire from daytime running lamp module to headlamp switch.

TB-4030-A

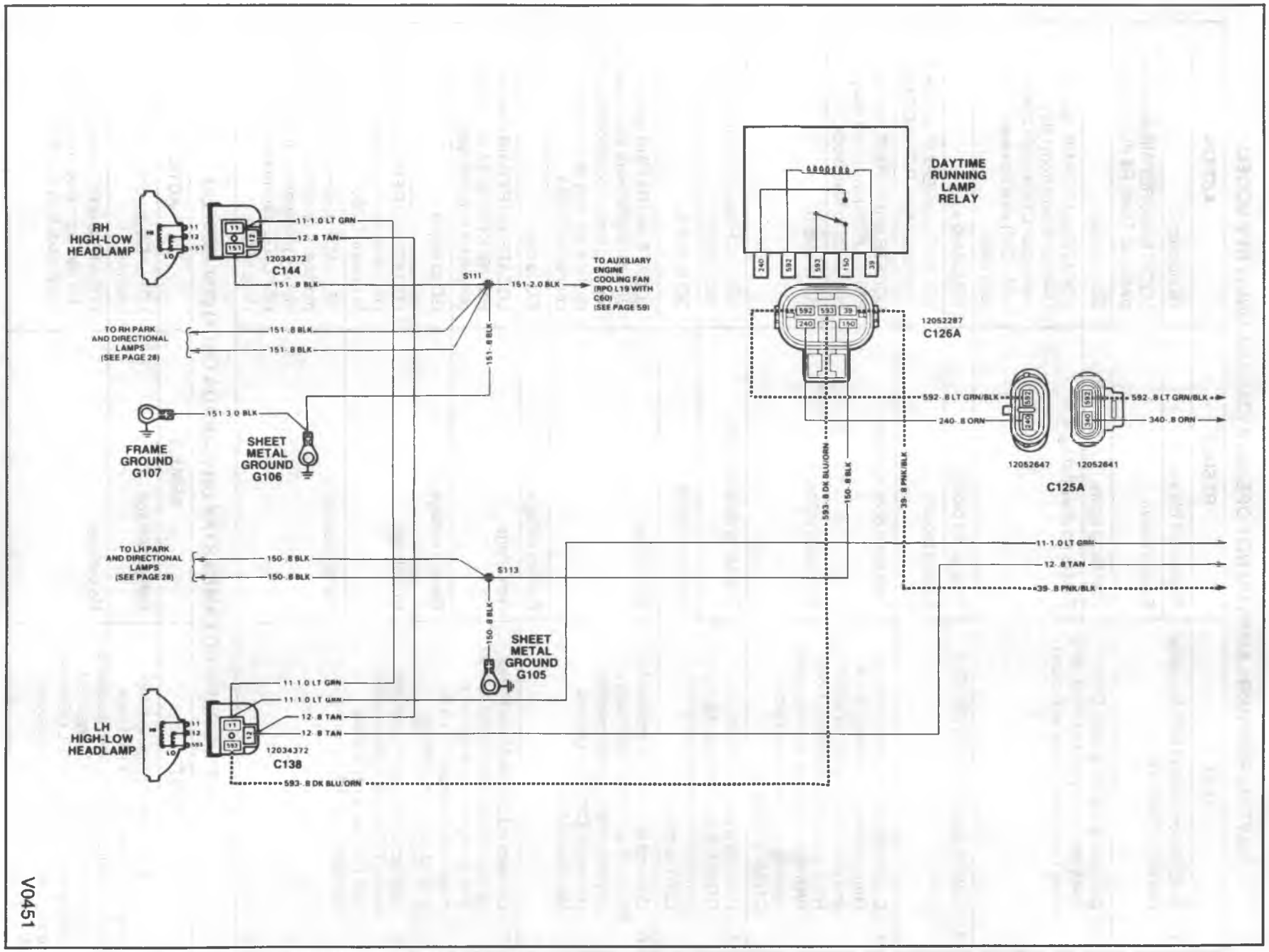

Figure 12—R/V DRL (2-Headlamp System)

V0451

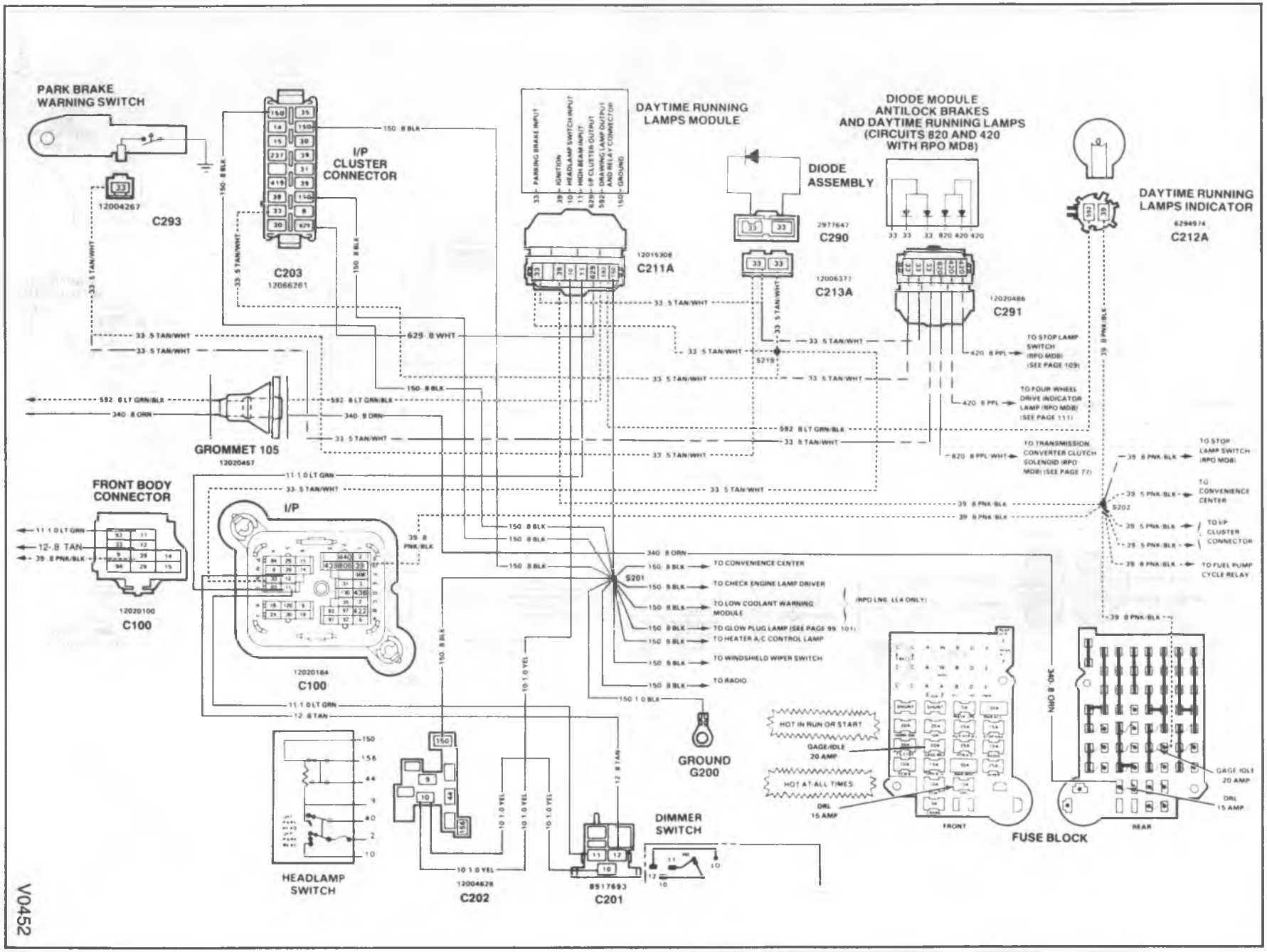

Figure 13—R/V DRL (2-Headlamp System) Cont.

V0452

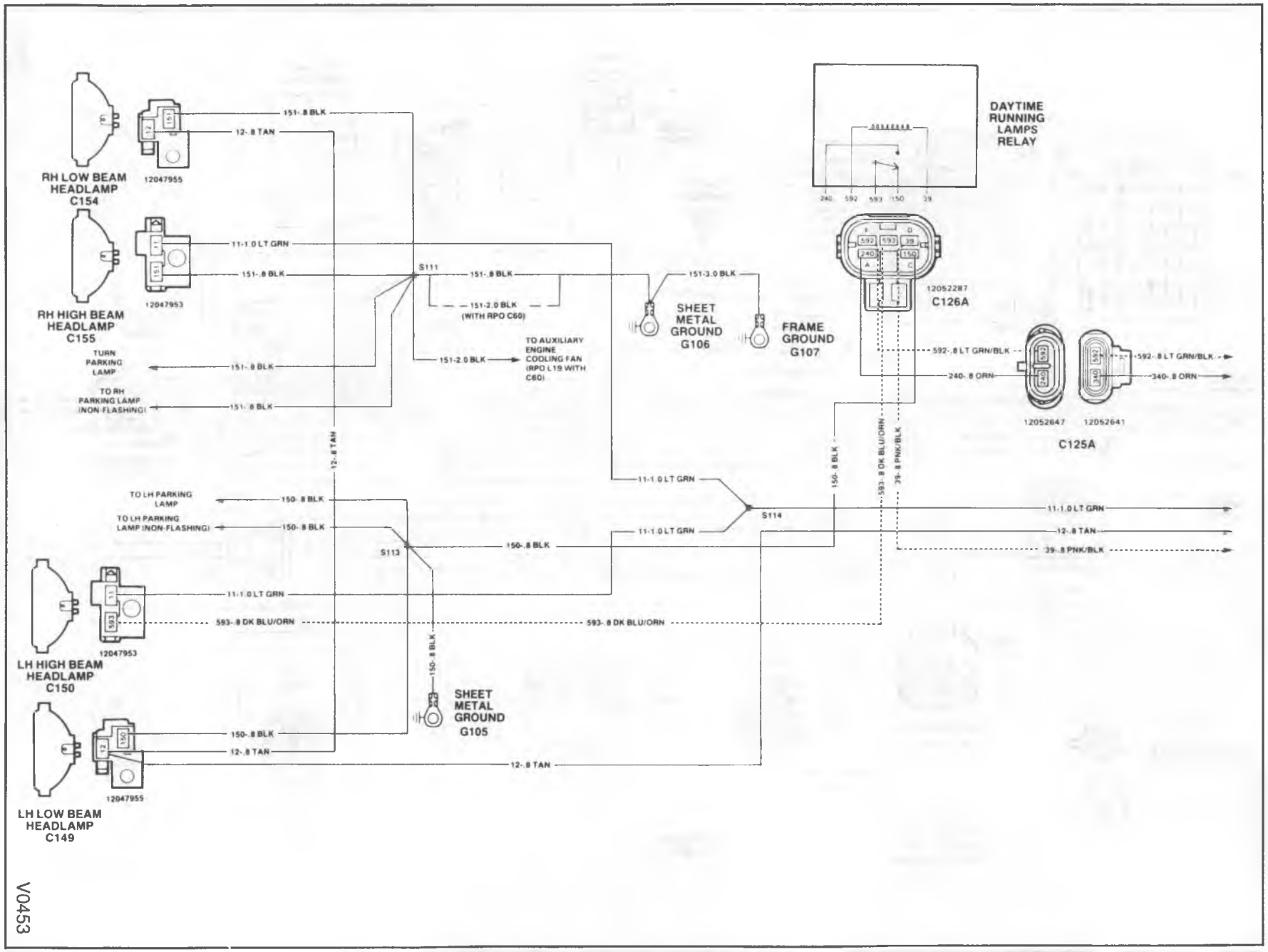

Figure 14—R/V DRL (4-Headlamp System)

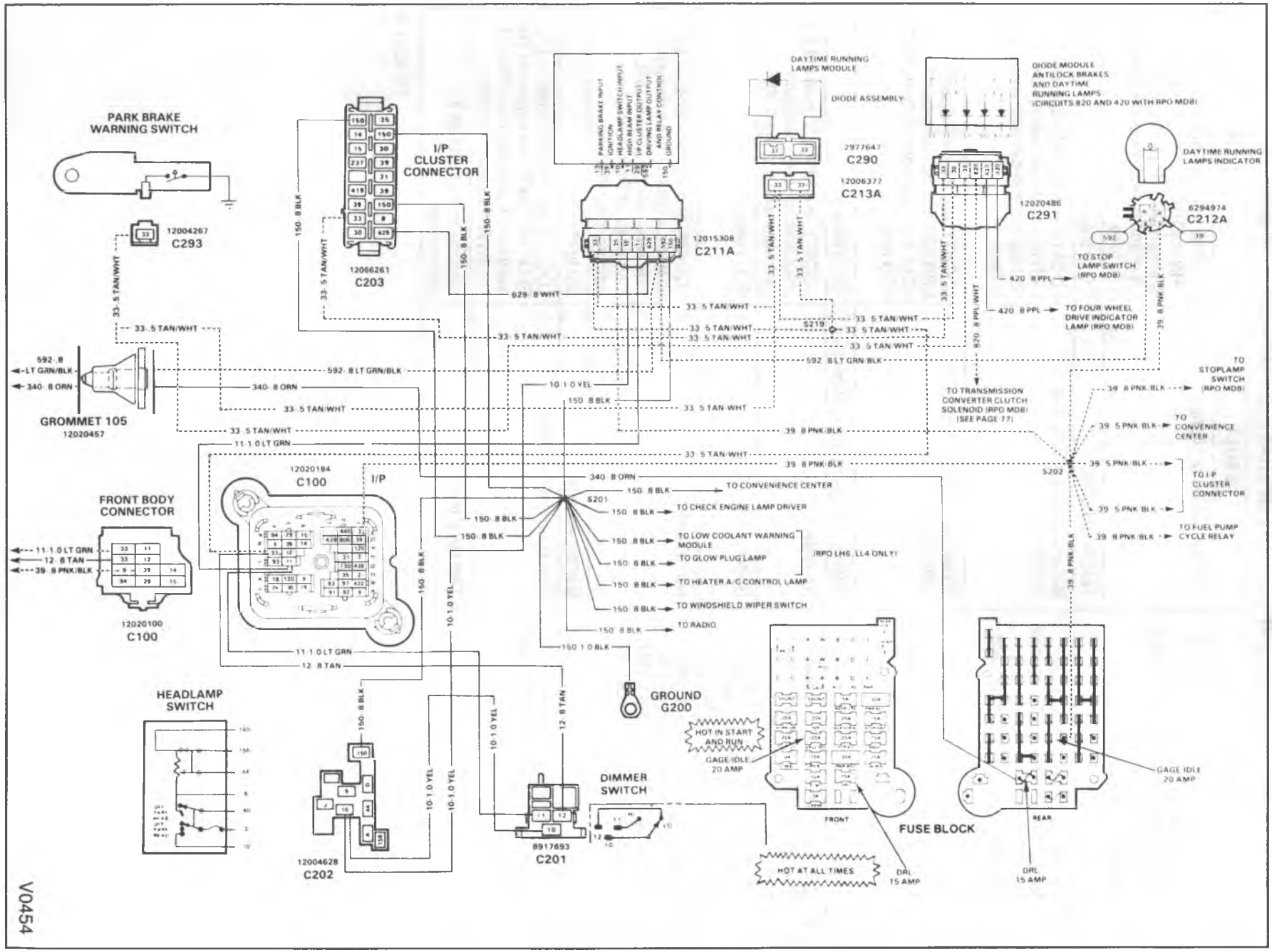

Figure 15—R/V DRL (4-Headlamp System) Cont.

DAYTIME RUNNING LAMPS DO NOT OPERATE (CANADA ONLY) (P MODELS)

TEST	RESULT	ACTION
1. With Ignition in RUN, Headlamps off and park brake released, connect test lamp from ORN (340) (240 RPO LL4) wire at DRL relay connector C242 to ground.	Test lamp does not light.	LOCATE and REPAIR open in ORN (340) (240 RPO LL4) wire between DRL relay connector C242 and fuse block or REPLACE DRL fuse.
	Test lamp lights.	GO to step 2.
2. Connect J 34029-A Multimeter from BRN (50) wire at DRL module connector C243 and DRL relay switch connector C242 to ground. Measure voltage.	Battery voltage at only one connector.	LOCATE and REPAIR open in BRN (50) wire between splice S212 and connector with missing voltage.
	No battery voltage at either connector.	LOCATE and REPAIR open in BRN (50) wire between splice S212 and fuse block or REPLACE HTR fuse.
	Battery voltage at both connectors.	GO to step 3.
3. Connect J 34029-A Multimeter from BRN (50) wire at DRL module connector C243 and DRL relay switch connector C242 to BLK (150) wire at each component connector. Measure voltage.	No voltage.	LOCATE and REPAIR open in BLK (150) wire between suspect connector and ground G200.
	Battery voltage.	GO to step 4.
4. Connect J 34029-A Multimeter from LT GRN/BLK (592) wire at DRL relay switch connector C242 to ground. Measure voltage.	No voltage.	LOCATE and REPAIR open in LT GRN/BLK (592) wire between the DRL relay switch and the DRL module or REPLACE daytime running lamp module.
	Battery voltage.	GO to step 5.
5. Connect test lamp from LT BLU/ORN (593) wire at LH HI/LOW beam connector C140.	Test lamp does not light.	LOCATE and REPAIR open in LT BLU/ORN (593) wire between DRL relay switch connector and the LH HI/LOW headlamp connector.
	Test lamp lights.	Daytime running lamps are operational.

TB-4031-A

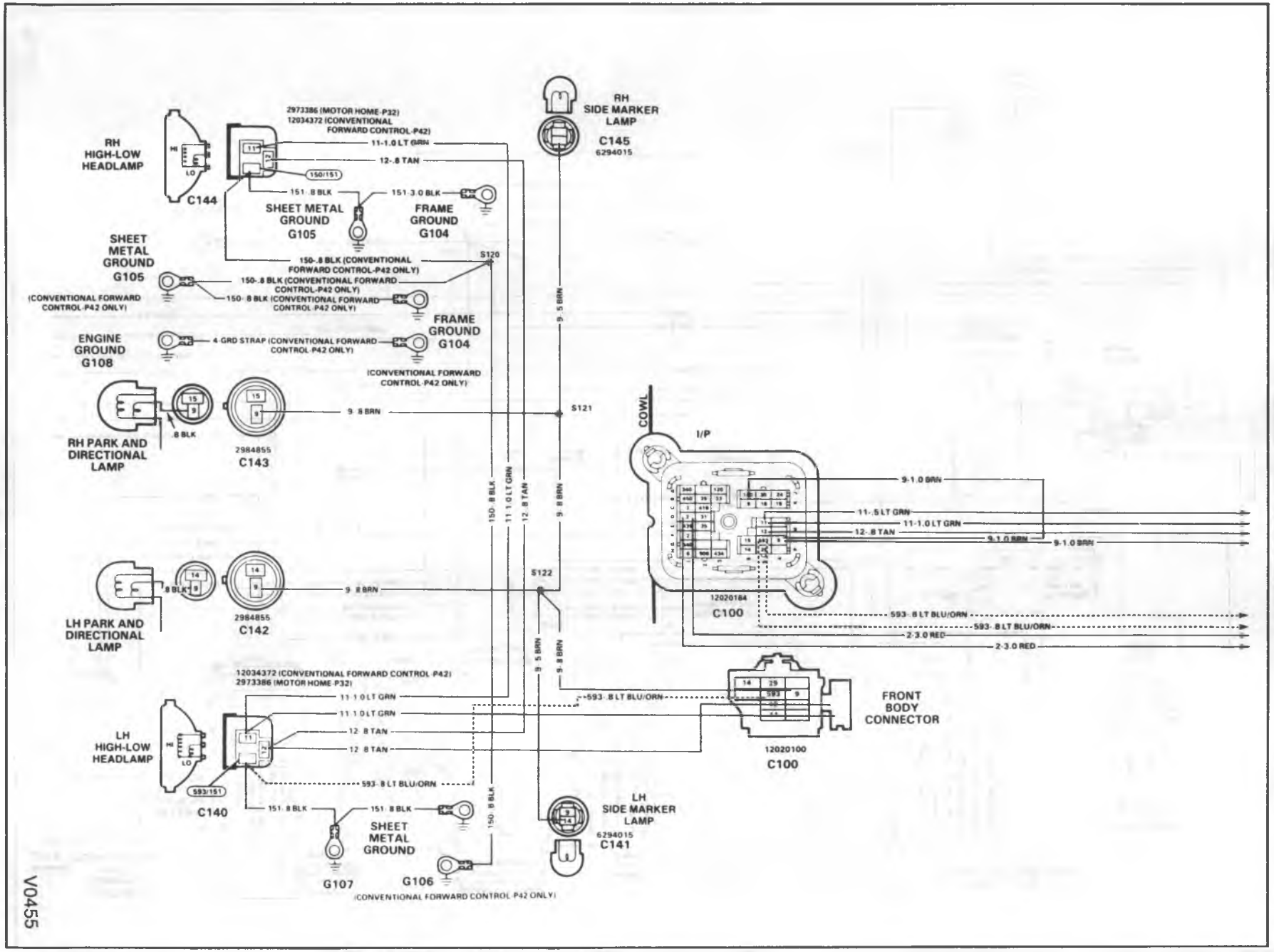

Figure 16—P-Model DRL

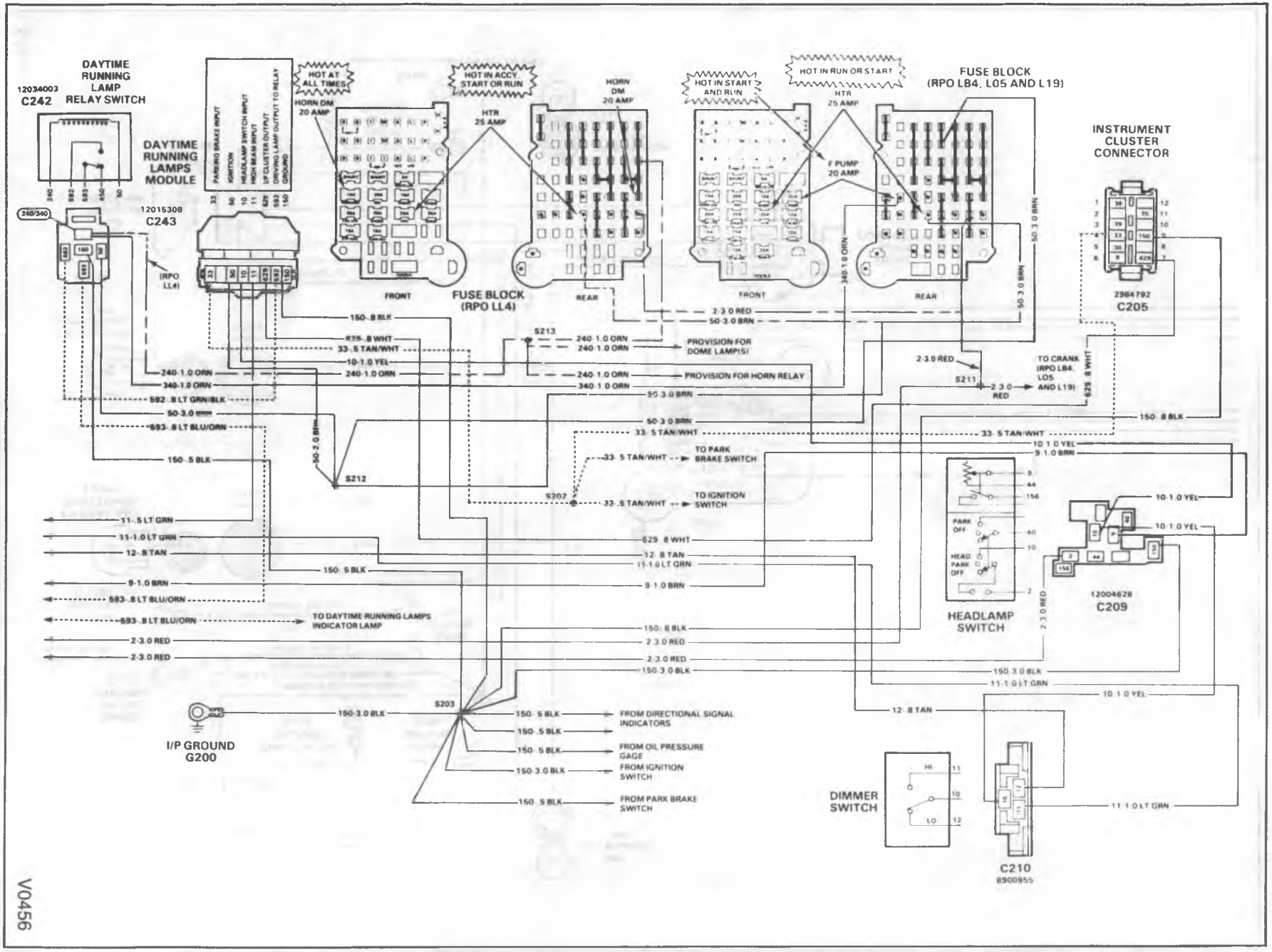

Figure 17—P-Model DRL (Cont.)

V0456

FRONT PARKING LAMPS

PROBLEM	POSSIBLE CAUSE	CORRECTION
One Side Not Working.	1. Bulb burned out. 2. Open connection at the bulb socket or the ground wire terminal.	1. Replace the bulb. 2. Jumper the bulb base socket connection to ground. If the bulb lights, repair the open ground circuit.
Both Sides Not Working.	1. Fuse blown. 2. Loose connection. 3. Open wiring. 4. Multiple bulb burnout. 5. Defective lamp switch.	1. Replace the fuse. If the new fuse blows, repair the short to ground in the brown wire circuit between the fuse panel through the lamp switch to the lamps. 2. Secure the connector at the lamp switch. 3. Using a test lamp, check the circuit on both sides of the fuse. If the test bulb does not light on either side, repair the open circuit between the fuse panel and the battery (possible open fusible link). If the test bulb lights at the lamp switch brown wire terminal, repair the open wiring between the lamp switch and the lamps. 4. If the test bulb lights at the lamp socket brown wire terminal, replace the bulb(s). 5. If the test bulb lights at the lamp switch orange wire but not at the brown wire, replace the defective lamp switch.

GMTB-0160-2L

FRONT SIDE MARKER LAMPS

Problem	Possible Cause	Correction
One Lamp Won't Work	1. Turn signal bulb burnt out (front lamp). 2. Side marker bulb burnt out. 3. Loose connection or open in wiring.	1. Switch turn signals on. If the signal bulb does not light, replace the bulb. (Bulb filament provides ground path for marker lamp bulb through the dark blue or brown wires.) 2. Replace the bulb. 3. Using a test lamp, check the brown wire terminal at the bulb socket. If the test bulb lights, repair the open ground circuit. If the bulb does not light, repair the open in the brown wire circuit.
Front or Rear Lamps Won't Work	1. Loose connection or open ground circuit. 2. Multiple bulbs burnt out.	1. If the associated tail or park lamps do not operate, check all the connectors in the brown wire circuit. If the park and turn lamps are not working, repair the open ground connections. 2. Replace the burnt out bulbs.
All Lamps Won't Work	1. Blown fuse. 2. Loose connection. 3. Open in wiring. 4. Defective lamp switch.	1. If the park and tail lamps do not operate, replace the blown fuse. If the new fuse blows, check for a short to ground between the fuse panel and the lamps. 2. Secure the connector to the lamp switch. 3. Check the tail lamp fuse with a test lamp. If the test bulb lights, repair the open wiring between the fuse and the light switch. If not, repair the open wiring between the fuse and the battery. (Possible open fusible link.) 4. Check the lamp switch with a test light. If the test bulb lights at the orange wire but not at the brown wire, replace the lamp switch.

GMTB-0846-2L

REAR SIDE MARKER LAMPS

PROBLEM	POSSIBLE CAUSE	CORRECTION
One Lamp Won't Work	1. Turn signal bulb burned out (front lamp). 2. Side marker bulb burned out. 3. Loose connection or open in wiring.	1. Switch turn signals on. If the signal bulb does not light, replace the bulb. (Bulb filament provides ground path for marker lamp bulb through the dark blue or brown wires.) 2. Replace the bulb. 3. Using a test lamp, check the brown wire terminal at the bulb socket. If the test bulb lights, repair the open ground circuit. If the bulb does not light, repair the open in the brown wire circuit.
Front Or Rear Lamps Won't Work	1. Loose connection or open ground circuit. 2. Multiple bulbs burned out.	1. If the associated tail or park lamps do not operate, check all the connectors in the brown wire circuit. If the park and turn lamps are not working, repair the open ground connections. 2. Replace the burned out bulbs.
All Lamps Won't Work	1. Blown fuse. 2. Loose connection. 3. Open in wiring. 4. Defective lamp switch.	1. If the park and tail lamps do not operate, replace the blown fuse. If the new fuse blows, check for a short to ground between the fuse panel and the lamps. 2. Secure the connector to the lamp switch. 3. Check the taillamp fuse with a test lamp. If the test bulb lights, repair the open wiring between the fuse and the lamp switch. If not, repair the open wiring between the fuse and the battery. (Possible open fusible link.) 4. Check the lamp switch with a test lamp. If the test bulb lights at the orange wire but not at the brown wire, replace the light switch.

GMTB-0847-2L

RUNNING, PARK AND LICENSE LAMPS

PROBLEM	POSSIBLE CAUSE	CORRECTION
One Side Not Working	1. Bulb burned out. 2. Open connection at the bulb socket or the ground wire terminal.	1. Replace the bulb. 2. Jumper the bulb base socket connection to ground. If the bulb lights, repair the open ground circuit.
Both Sides Not Working	1. Tail lamp fuse blown. 2. Loose connection. 3. Open wiring. 4. Multiple bulb burnout. 5. Defective lamp switch.	1. Replace the fuse. If the new fuse blows, repair the short to ground in the brown wire circuit between the fuse panel through the lamp switch to the lamp. 2. Secure the connector at the lamp switch. 3. Using a test lamp, check a circuit on both sides of the fuse. If the test bulb does not light on either side, repair the open circuit between the fuse panel and the battery (possible open fusible link). If the test bulb lights at the lamp switch brown wire terminal, repair the open wiring between the lamp switch and the lamps. 4. If the test bulb lights at the lamp socket brown wire terminal, replace the bulb(s). 5. If the test bulb lights at the lamp switch orange wire but not at the brown wire, replace the defective lamp switch.

GMTB-0849-2L

TURN SIGNAL AND HAZARD SYSTEMS

PROBLEM	POSSIBLE CAUSE	CORRECTION
Turn Signals Not Working On One Side	1. Bulb(s) burned out (flasher cannot be heard).	1. Turn the hazard warning system "ON." If one or more bulbs are inoperative, replace the bulbs as necessary.
	2. Open wiring or loose ground connector.	2. Turn the hazard warning system on. If one or more bulbs are inoperative, use the test lamp and check the circuit at the bulb socket. If the test bulb lights, repair the open ground connection. If not, repair the open wiring between the bulb socket and the turn signal switch.
	3. Improper bulb or defective turn signal switch.	3. Turn the hazard warning system on. If all the front lamps and rear lamps operate, check for an improper bulb (see bulb chart). If the bulbs are OK, replace the defective turn signal switch.
	4. Short to ground. (Flasher can be heard, no bulbs operate).	4. Locate and repair the short to ground by disconnecting the front and rear circuits separately.
Turn Signals Not Working	1. Blown turn signal fuse.	1. Turn the hazard warning system on. If all the lamps operate, replace the blown fuse. If the new fuse blows, repair the short to ground between the fuse and the lamps.
	2. Defective flasher (located in convenience center near steering column).	2. If the turn signal fuse is OK and the hazard warning system will operate the lamps, replace the defective turn signal flasher.
	3. Loose connection.	3. Secure the steering column connector.
Hazard Warning Not Working	1. Blown stop-hazard fuse.	1. Switch the turn signals "ON." If the lights operate, replace the stop-hazard fuse if blown. If the new fuse blows, repair the short to ground. (Could be in stop lamp circuit).
	2. Faulty hazard warning flasher. (Located in the convenience center).	2. If the stop-hazard fuse is OK, switch the turn signals on. If the lamps operate, replace the defective hazard flasher.
	3. Open in the wiring or a defective turn signal switch.	3. Using the test lamp, check the brown wire in the turn signal steering column connector. If the test bulb does not light, repair the open circuit betwen the flasher and the connector. If the test lamp indicates power on the brown wire and connection is good, use a test lamp to check the output terminals (lt. blue, blue, yellow and dark green wires).

GMTB-0850-2L

STOPLAMP SYSTEM

PROBLEM	POSSIBLE CAUSE	CORRECTION
One Bulb Not Working	Bulb burned out.	Replace the bulb.
One Side Not Working (Multi-Bulb Design)	1. Loose connection, open wiring or faulty bulbs. 2. Faulty directional signal switch or cancelling cam.	1. Turn on the directional signal. If lamp does not operate, check the bulbs. If the bulbs are OK, check all connections. If the lamp still does not operate, use the test lamp and check for open wiring. 2. If the lamp will operate by turning the directional signal on, the switch is not centering properly during the cancelling operation. Replace faulty cancelling cam or directional signal switch.
All Stoplamps Inoperative	1. Stop-hazard fuse is blown. 2. Open in the wire from the fuse to the stop-switch. 3. Stop-switch misadjusted or faulty.	1. Replace the fuse. If the new fuse blows, repair the short to ground in the circuit between the fuse and the lamps. 2. Check for power at the brown wire at the stop-switch and at the fuse. If there is power at the fuse but not at the switch, check for an open in the brown wire. 3. With the brake pedal pressed, check the white wire terminal in the steering column connector with a test lamp. If the bulb does not light, check the stop switch for proper adjustment. If the adjustment is OK, jumper the stop switch. If the stop lamps operate, replace the stop switch.
Will Not Turn Off	Stop switch misadjusted or faulty.	Readjust the switch. If the switch still malfunctions, replace the switch.

GMTB-0851-2L

BACKUP LAMP SYSTEM

Problem	Possible Cause	Correction
One Lamp Not Working or Intermittent	1. Loose or burnt out bulb. 2. Loose connection. 3. Open ground connections.	1. Secure or replace the bulb. 2. Tighten the connectors. 3. Repair the bulb ground circuit.
Both Lamps Not Working or Intermittent	1. Gear selector switch is misadjusted (open when shifter lever is in reverse position). 2. Loose connection or open circuit. 3. Blown fuse. 4. Faulty gear selector or backup lamp switch. 5. Faulty ignition switch.	1. Readjust the gear selector switch. 2. Check all connectors. If OK, check the continuity of the circuit from the fuse to the lamp on either side of the fuse. Correct the open circuit from the battery to the fuse. 3. Replace the fuse. If the new fuse blows, repair the short to ground in the circuit from the fuse through the gear selector or from the fuse through the gear selector or the backup lamp switch to the backup lamps. 4. With the ignition "ON," check the switch terminals in the backup position with the test lamp. If the test bulb lights at the dark blue wire terminal but not at the light green wire terminal, replace the switch. 5. If the test bulb lights at the ignition switch battery terminal, but not at the output terminal, replace the ignition switch.
Lamp Will Not Turn Off	Gear selector switch misadjusted (closed when the shift lever is not in the reverse position).	Readjust the gear selector switch.

GMTB-0852-2L

DOME LAMP

TEST	RESULT	ACTION
1. Connect test lamp from ORN (40) wire at dome lamp connector C300 to ground.	Test lamp lights.	GO to step 2.
	Test lamp does not light.	LOCATE and REPAIR open in ORN (40) wire.
2. Open both doors and turn headlamp switch to full counter–clockwise position. Connect test lamp from ORN (40) wire to WHT (156) wire at dome lamp connectors. C300.	Test lamp lights.	REPLACE bulb if dome lamp did not work. If dome lamp stayed ON all the time, GO to step 3.
	Test lamp does not light.	GO to step 3.
3. Disconnect jamb switch connectors C504 and C604. Connect ohmmeter from WHT (156) terminal to ground terminal at jamb switch. Take a reading with door open and a reading with door closed. With door open reading must be 0 ohms and door closed, infinite ohms.	Correct readings.	GO to step 4.
	Incorrect readings.	REPLACE jamb switch(es) that have incorrect reading.
4. Disconnect headlamp switch connector C208. Connect ohmmeter from WHT (156) terminal to BLK (150) terminal at headlamp switch. Turn headlamp switch to full counter-clockwise and then full clockwise positions, and take a reading in each position. When counterclockwise, reading must be 0 ohms and when clockwise, reading must be infinite ohms.	Correct readings.	LOCATE and REPAIR open or short in WHT (156) wire and BLK (150) wire.
	Incorrect readings.	REPLACE headlamp switch.

TB-4032-A

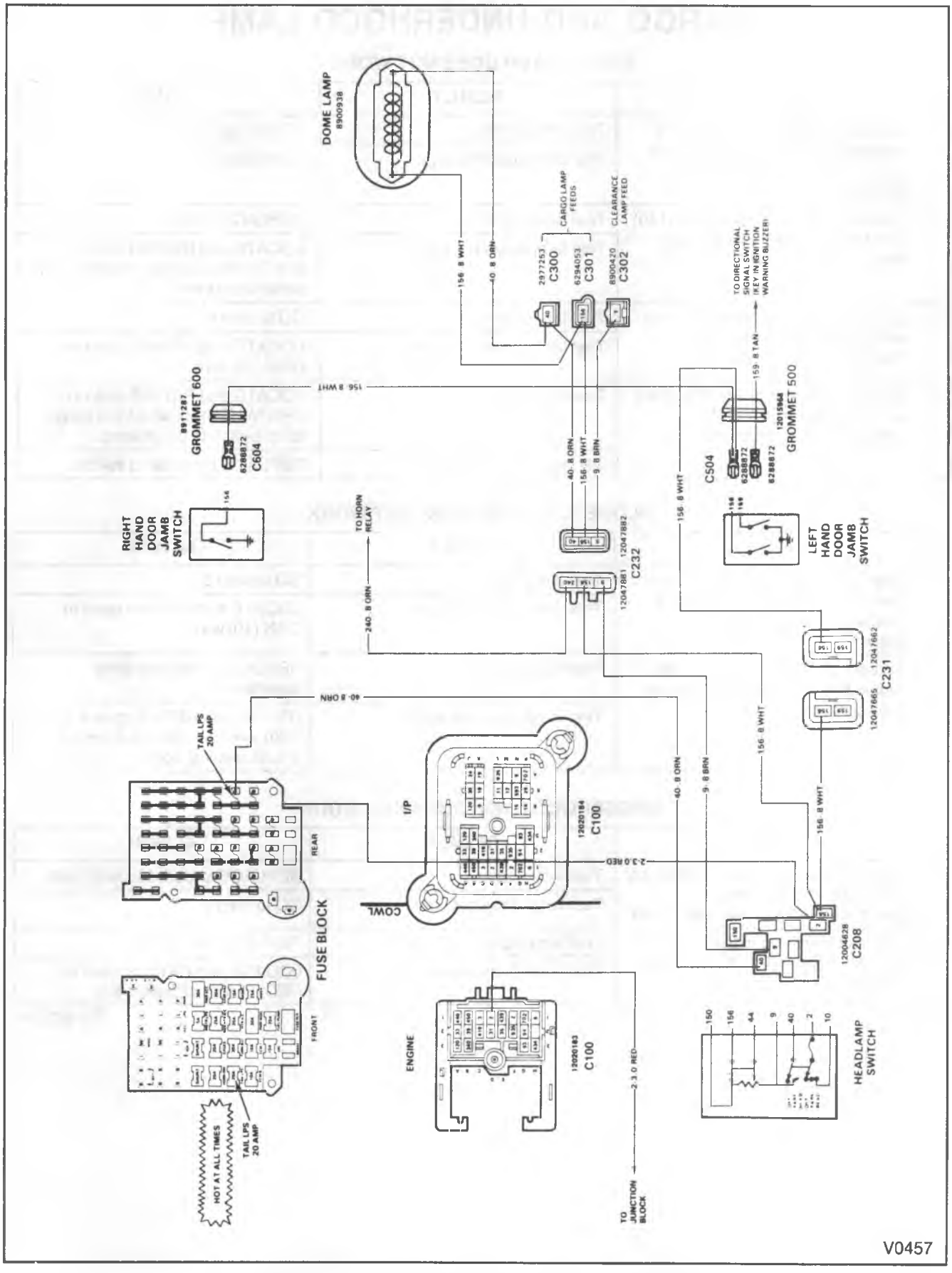

Figure 18—R/V Dome Lamp Circuit W/O Lamp Group

CARGO AND UNDERHOOD LAMP

CARGO LAMP DOES NOT WORK

TEST	RESULT	ACTION
1. Turn cargo switch ON. Connect test lamp from ORN (140) wire at cargo lamp connector C431 to ground.	Test lamp lights.	GO to step 2.
	Test lamp does not light.	GO to step 3.
2. Connect test lamp from ORN (140) wire to WHT (156) wire at cargo lamp connector C431.	Test lamp lights.	REPLACE bulb.
	Test lamp does not light.	LOCATE and REPAIR open in WHT (156) wire from cargo lamp to panel lamp switch.
3. Connect test lamp from ORN (40) wire at cargo lamp switch connector C430 to ground.	Test lamp lights.	GO to step 4.
	Test lamp does not light.	LOCATE and REPAIR open in ORN (40) wire.
4. Connect test lamp from ORN (140) wire at cargo lamp switch connector C430 to ground.	Test lamp lights.	LOCATE and REPAIR open in ORN/WHT (140) wire from cargo lamp switch to cargo lamp.
	Test lamp does not light.	REPLACE cargo lamp switch.

GLOVE BOX LAMP DOES NOT WORK

TEST	RESULT	ACTION
1. Open glove box door. Connect test lamp from ORN (40) wire at glove box lamp connector C230 to ground.	Test lamp lights.	GO to step 2.
	Test lamp does not light.	LOCATE and REPAIR open in ORN (40) wire.
2. Connect test lamp from ORN (40) wire to BLK (150) wire at glove box lamp connector C230.	Test lamp lights.	REPLACE glove box lamp assembly.
	Test lamp does not light.	LOCATE and REPAIR open in BLK (150) wire from glove box lamp to ground terminal G200.

UNDERHOOD LAMP DOES NOT WORK

TEST	RESULT	ACTION
1. Connect a test lamp from ORN (40) wire to BLK (150) wire at underhood lamp connector C116A.	Test lamp lights.	REPLACE underhood lamp bulb.
	Test lamp does not light.	GO to step 2.
2. Connect test lamp to RED (2) wire at in-line fuse connector C115A to ground.	Test lamp lights.	REPLACE in-line fuse.
	Test lamp does not light.	LOCATE and REPAIR open in RED (2) wire or fusible link.

TB-4033-A

COURTESY LAMPS DO NOT OPERATE

TEST	RESULT	ACTION
1. Connect test lamp from ORN (40) wire at courtesy lamp connector C218A to ground. Check at each courtesy lamp.	Test lamp lights.	GO to step 2.
	Test lamp does not light.	LOCATE and REPAIR open in ORN (40) wire.
2. Open right door. Connect test lamp from ORN (40) wire to WHT (156) wire at courtesy lamp connector C218.	Test lamp lights.	REPLACE bulb.
	Test lamp does not light.	CHECK to make sure jamb switch is closing. If switch closes, LOCATE and REPAIR open in WHT (156) wire and BLK (150) wire.

DOME LAMP DOES NOT WORK OR STAYS ON ALL THE TIME

TEST	RESULT	ACTION
1. Connect test lamp from ORN (40) wire at both dome lamps to ground.	Test lamp lights.	GO to step 2.
	Test lamp does not light.	LOCATE and REPAIR open in ORN (40) wire.
2. Open both doors and turn panel lamp switch to ON. Connect test lamp from ORN (40) wire to WHT (156) wire at dome lamp.	Test lamp lights.	REPLACE bulb if dome lamp did not work. If dome lamp stayed ON all the time, GO to step 3.
	Test lamp does not light.	GO to step 3.
3. Disconnect jamb switch connectors. Connect ohmmeter from WHT (156) terminal to BLK (150) terminal at jamb switch. Take a reading with door open and a reading with door closed. With door open reading must be 0 ohms and door closed, infinite ohms.	Correct readings.	GO to step 4.
	Incorrect readings.	REPLACE jamb switch(es) that have incorrect reading.
4. Disconnect headlamp switch connector C202. Connect ohmmeter from WHT (156) terminal to BLK (150) terminal at panel lamp switch. Turn panel lamp switch to ON and then OFF and take a reading in each position. When ON, reading must be 0 ohms and when OFF, reading must be infinite ohms.	Correct readings.	LOCATE and REPAIR open or short in WHT (156) wire and BLK (150) wire.
	Incorrect readings.	REPLACE panel lamp switch.

TB-4034-A

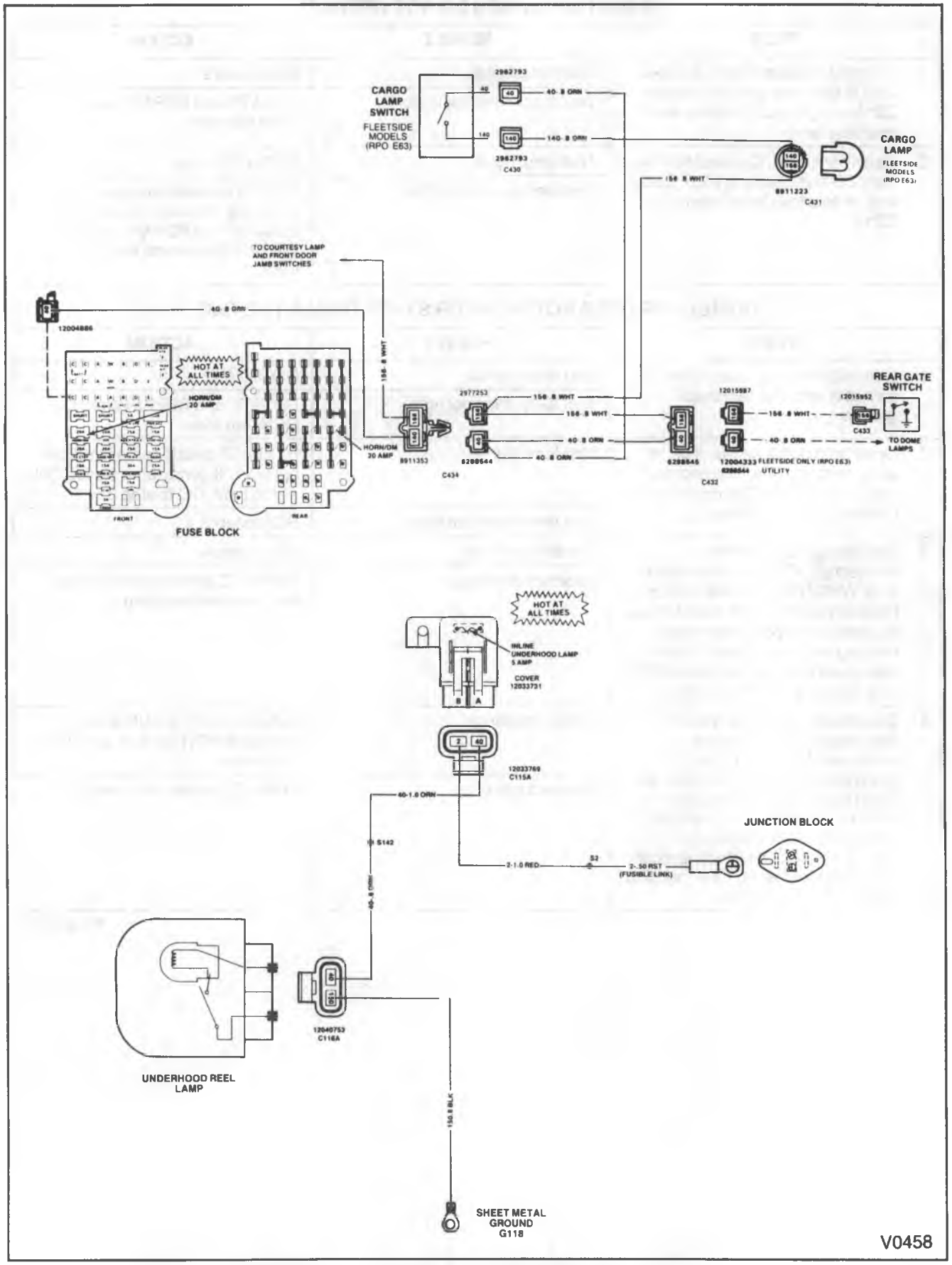

Figure 19—R/V Cargo And Underhood Lamp Circuits

FOUR-WHEEL DRIVE INDICATOR LAMP

FOUR-WHEEL DRIVE INDICATOR LAMP WILL NOT TURN OFF

TEST	RESULT	ACTION
Disconnect transfer case switch connector C306.	4WD indicator lamp goes off.	REPLACE transfer case switch.

FOUR-WHEEL DRIVE ENGAGES BUT 4WD INDICATOR LAMP DOES NOT LIGHT (V100, V200)

TEST	RESULT	ACTION
1. Place ignition switch in RUN. Remove transfer case connector C306. Connect a test lamp from the BRN (141) wire to ground.	Test lamp lights.	GO to step 2.
	Test lamp does not light.	CHECK radio fuse, if good, LOCATE and REPAIR open in BRN (141) wire.
2. Reconnect transfer case connector C306. Connect a test lamp to the WHT (156) wire at the back of the transfer case connector C306 to ground. Place the transfer case in four-wheel drive.	Test lamp lights.	GO to step 3.
	Test lamp does not light.	REPLACE transfer case switch.
3. With ignition switch in RUN and transfer case in four-wheel drive, disconnect 4WD indicator lamp connector C211. Connect a test lamp between WHT (156) wire and ground.	Test lamp lights.	GO to step 4.
	Test lamp does not light.	LOCATE and REPAIR open in WHT (156) wire.
4. Connect a test lamp between WHT (156) wire and BLK (150) wire at connector C211.	Test lamp lights.	REPLACE bulb.
	Test lamp does not light.	LOCATE and REPAIR open in BLK (150) wire to ground.

FOUR-WHEEL DRIVE ENGAGES BUT 4WD INDICATOR LAMP DOES NOT LIGHT (V3)

TEST	RESULT	ACTION
1. Disconnect 4WD indicator lamp connector C211. Connect test lamp to BRN/WHT (141) wire to ground.	Test lamp lights.	GO to step 2.
	Test lamp does not light.	CHECK radio fuse, if good LOCATE and REPAIR open in BRN/WHT (141) wire.
2. Connect test lamp to connector C211 at BRN/WHT (141) wire to WHT (156) wire. Engage four-wheel drive.	Test lamp lights.	REPLACE 4WD indicator lamp.
	Test lamp does not light.	GO to step 3.
3. Disconnect transfer case switch connector C306. Connect test lamp to WHT (156) wire to ground.	Test lamp lights.	GO to step 4.
	Test lamp does not light.	LOCATE and REPAIR open in WHT (156) wire.
4. Connect test lamp between WHT (156) wire and BLK (150) wire at transfer case switch connector C211 make sure four-wheel drive is engaged.	Test lamp lights.	REPAIR transfer case switch.
	Test lamp does not light.	LOCATE and REPAIR open in BLK (150) wire to ground.

TB-3193-2A

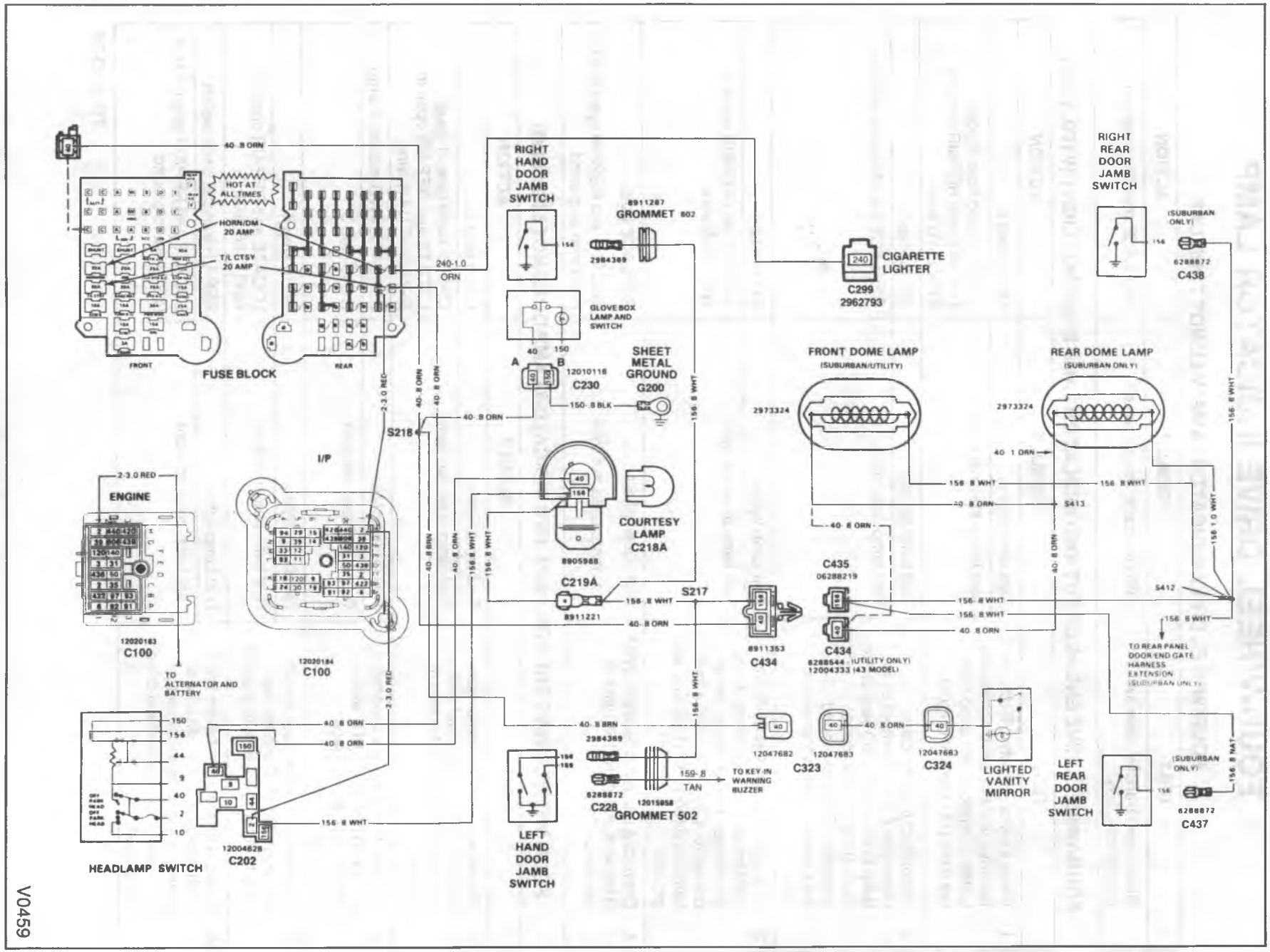

Figure 20—R/V Dome, Glove Box, Lighted Vanity And Cigarette Lighter Circuits (Lamp Group)

V0459

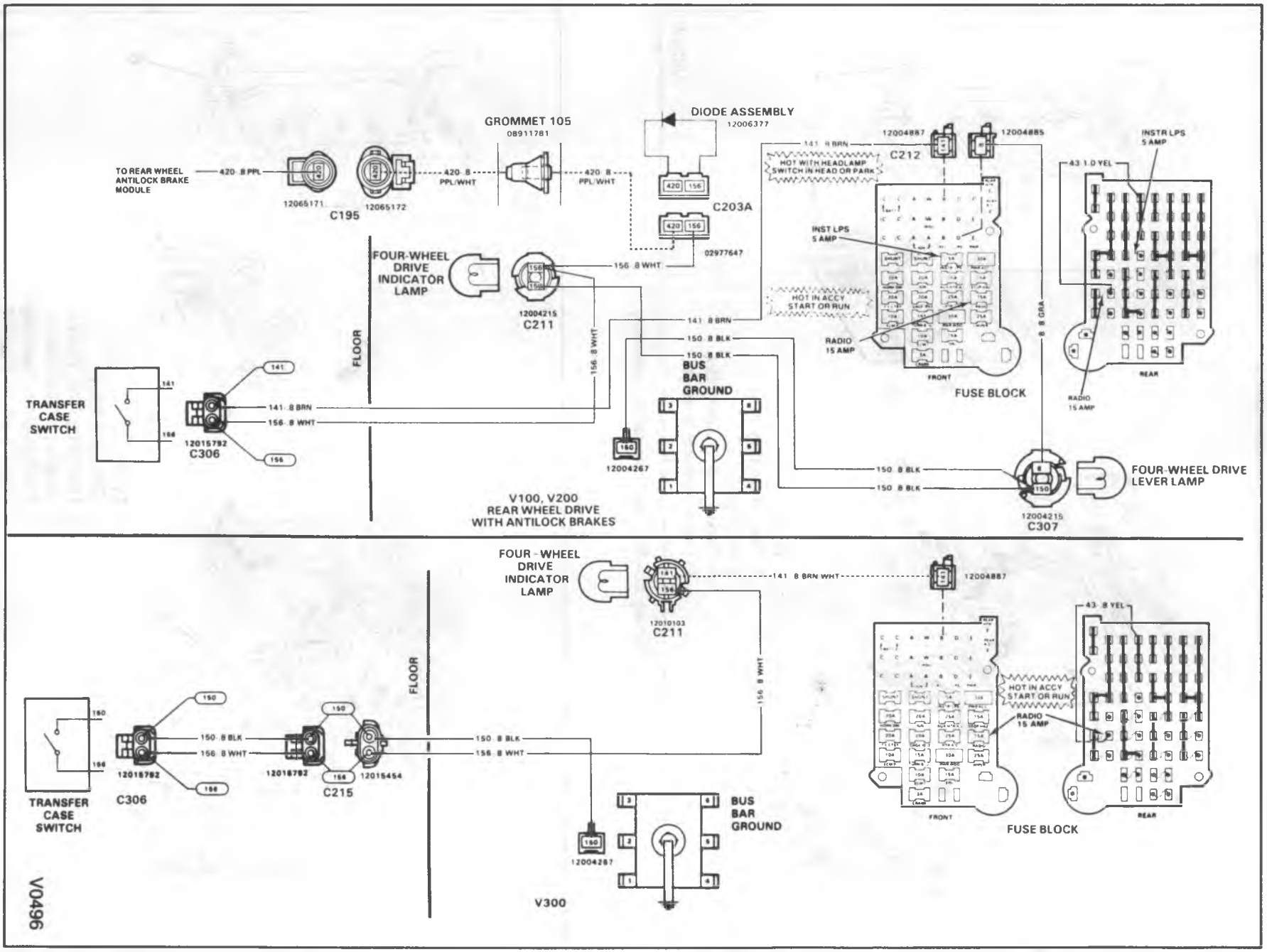

Figure 21—Four-Wheel Drive Indicator Lamp Circuit

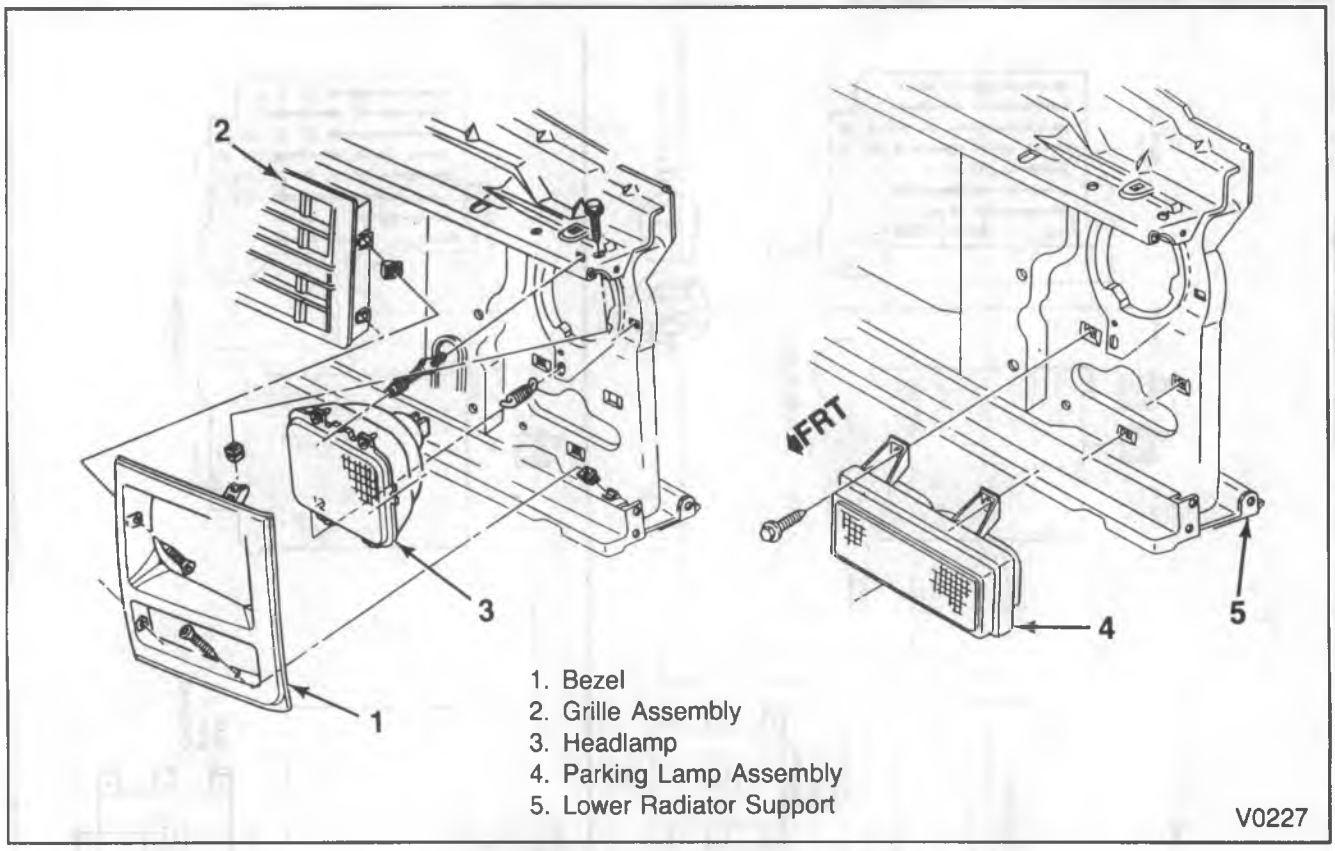

Figure 22—R/V Two Headlamp Assembly

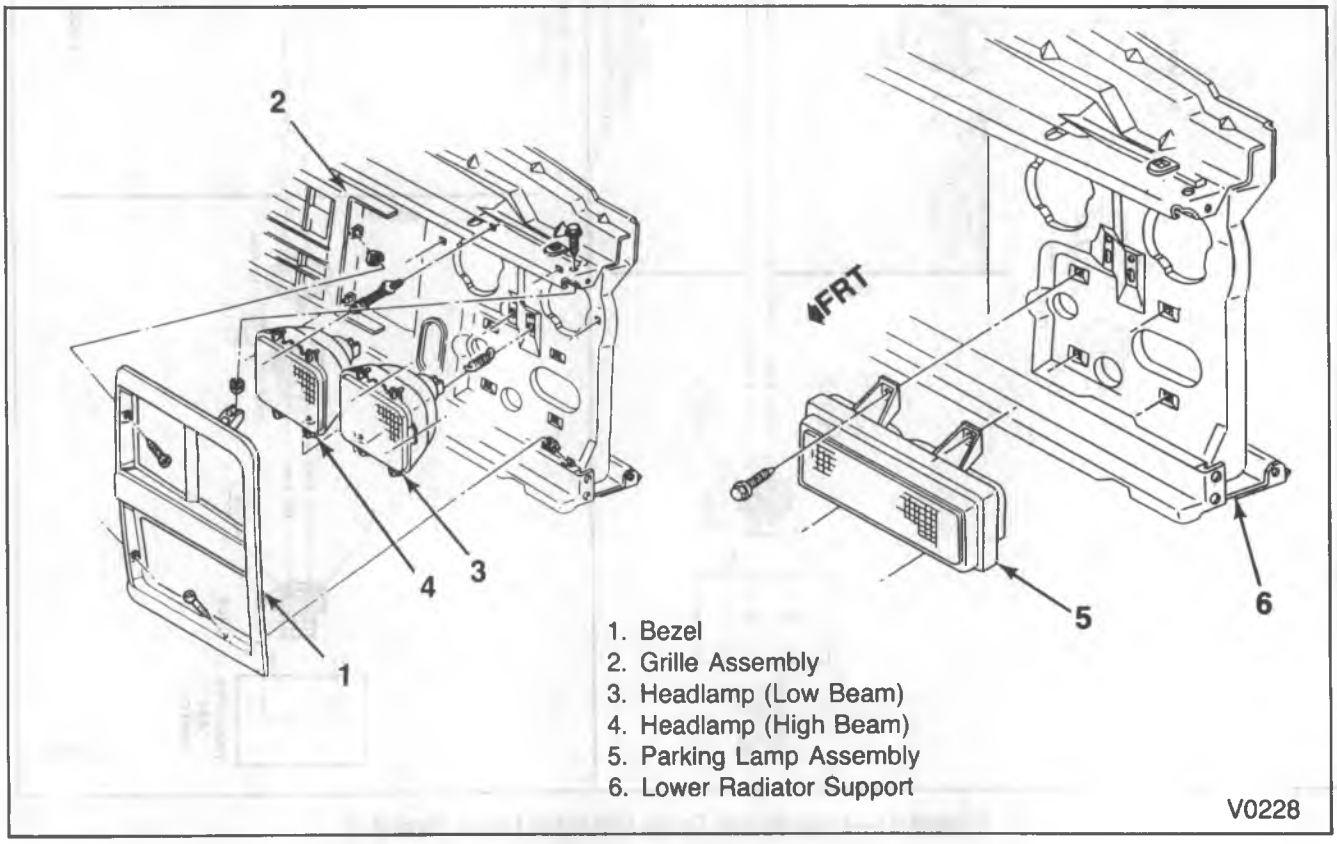

Figure 23—R/V Four Headlamp Assembly

ON-VEHICLE SERVICE

HEADLAMP UNIT REPLACEMENT

Remove or Disconnect (Figures 22 and 23)

1. Battery ground cable from the battery.
2. Headlamp bezel retaining screws.
3. Bezel.
4. Retaining ring screws.
   - Be careful not to move the adjustment screws.
5. Retaining ring spring, using a hooked tool.
6. Retaining ring from the mounting ring.
7. Headlamp unit.
8. Headlamp electrical connector.

install or Connect (Figures 22 and 23)

1. Headlamp electrical connector.
2. Headlamp.
3. Retaining ring.
4. Retaining ring screws.
   - Make sure that the headlamp is properly seated.
5. Retaining ring spring.
6. Bezel.
7. Bezel retaining screws.
8. Battery ground cable to the battery.

HEADLAMP ADJUSTMENT

Horizontal and vertical aiming of each headlamp is done by two (2) adjusting screws which move the mounting ring against the tension of the coil spring (figure 24).

Some state and local authorities have specific requirements for aiming headlamps and these requirements should be followed.

Replacement of a headlamp will normally not require aiming adjustment. However, do check the aim.

Use the safety aimer J 25300-B or equivalent (figure 25). Instructions for using the safety aimer are supplied by the instrument manufacturer.

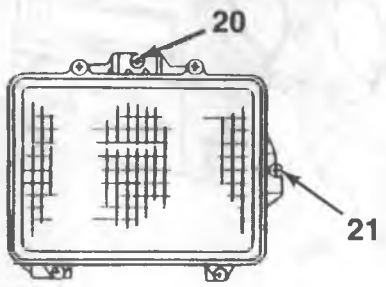

20. Vertical Adjusting Screw
21. Horizontal Adjusting Screw

F-00821

Figure 24—Headlamp Aiming Screws

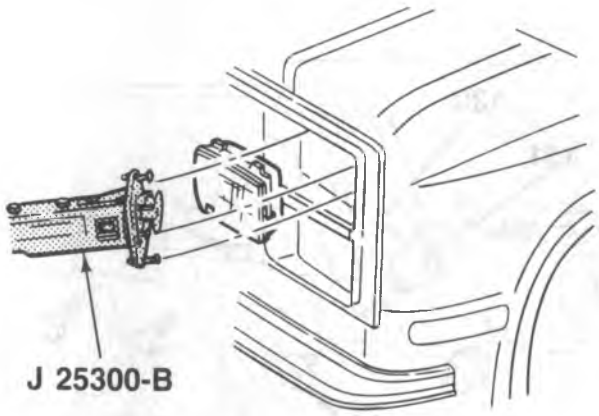

L00158

Figure 25—Headlamp Aimer

HEADLAMP SWITCH REPLACEMENT

R/V MODELS

Remove or Disconnect (Figures 26 and 27)

1. Battery ground cable from the battery.
2. Knob assembly (131).
   - Push in retainer pin on the switch body.
   - Pull out the knob assembly.
3. Trim panel screws (121).
4. Trim panel (120).
5. Bezel (132).
6. Light switch harness (130).
7. Light switch (133).

Install or Connect (Figures 26 and 27)

1. Light switch (133).
2. Light switch harness (130).
3. Bezel (132).
4. Trim panel (120).
5. Trim panel screws (121).
6. Knob assembly (131).
7. Battery ground cable to the battery.

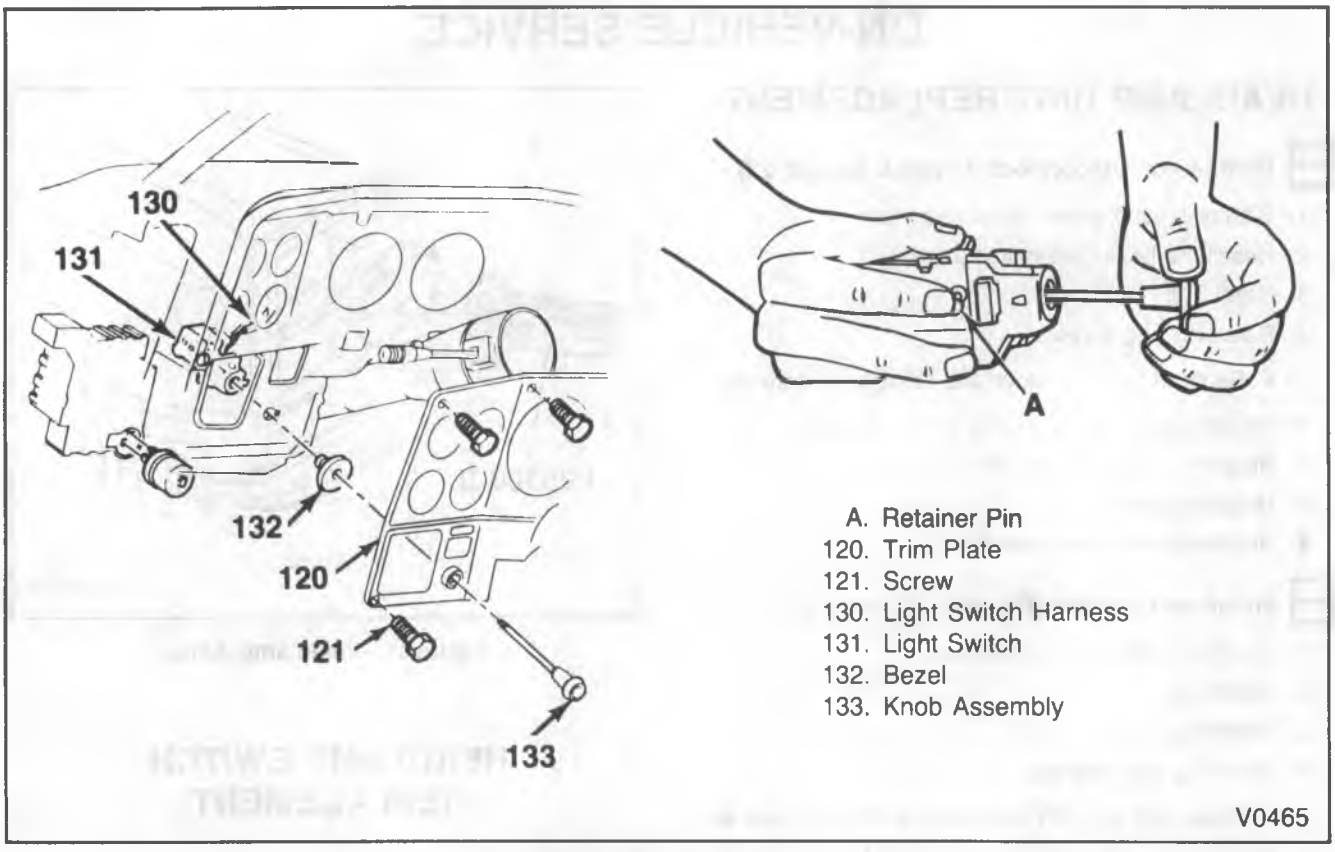

Figure 27—R/V Model Light Switch And Knob Removal

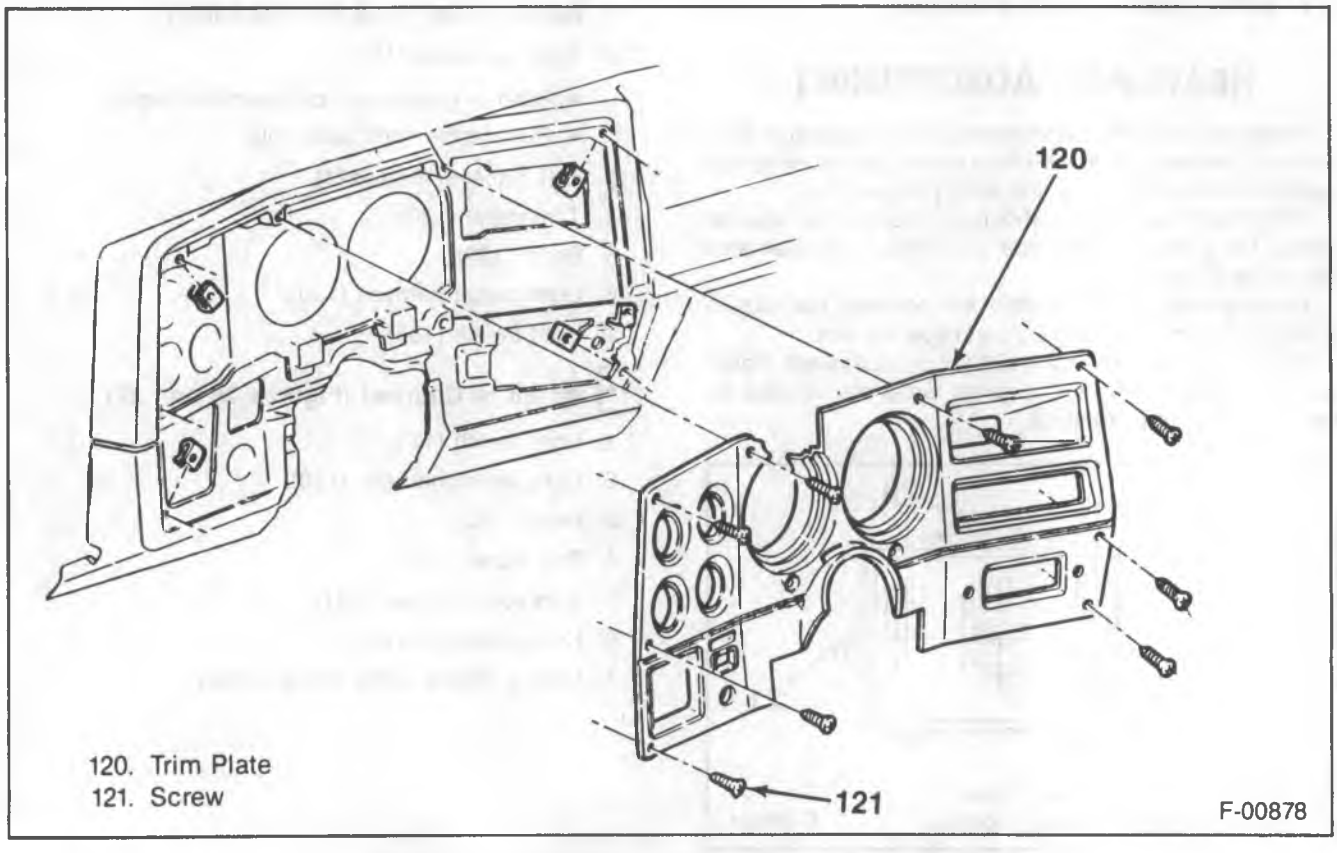

Figure 26—R/V Model Instrument Panel Trim Plate

DIMMER SWITCH REPLACEMENT

Remove or Disconnect (Figure 28)

1. Battery ground cable from the battery.
2. Steering wheel. Refer to STEERING COLUMN-STANDARD (SEC. 3F1) or STEERING COLUMN-TILT (SEC. 3F2).
3. Dimmer switch connector (147).
4. Dimmer switch (148) from steering column support (146).
   - Pry switch up and away from column.

Install or Connect (Figure 28)

1. Dimmer switch (148) to steering column support (146).
   - Seat switch on column retainers.
2. Dimmer switch connector (147).
3. Steering wheel. Refer to STEERING COLUMN-STANDARD (SEC. 3F1) or STEERING COLUMN-TILT (SEC. 3F2).
4. Battery ground cable to the battery.

FRONT PARKING LAMP REPLACEMENT

R/V MODELS — TWO HEADLAMP OPTION

Remove or Disconnect (Figure 22)

1. Battery ground cable from the battery.
2. Four bezel retaining screws.
3. Bezel.
4. Three park lamp retaining screws.
5. Parking lamp.
6. Electrical connector from the parking lamp.

Install or Connect (Figure 22)

1. Electrical connector to the parking lamp.
2. Parking lamp.
3. Three parking lamp retaining screws.
4. Bezel.
5. Four bezel retaining screws.
6. Battery ground cable to the battery.

R/V MODELS — FOUR HEADLAMP OPTION

Remove or Disconnect (Figure 23)

1. Headlamp bezel.
2. Parking lamp assembly.
3. Electrical connector from lamp assembly.

Install or Connect (Figure 23)

1. Electrical connector to lamp assembly.
2. Parking lamp assembly.
3. Headlamp bezel.

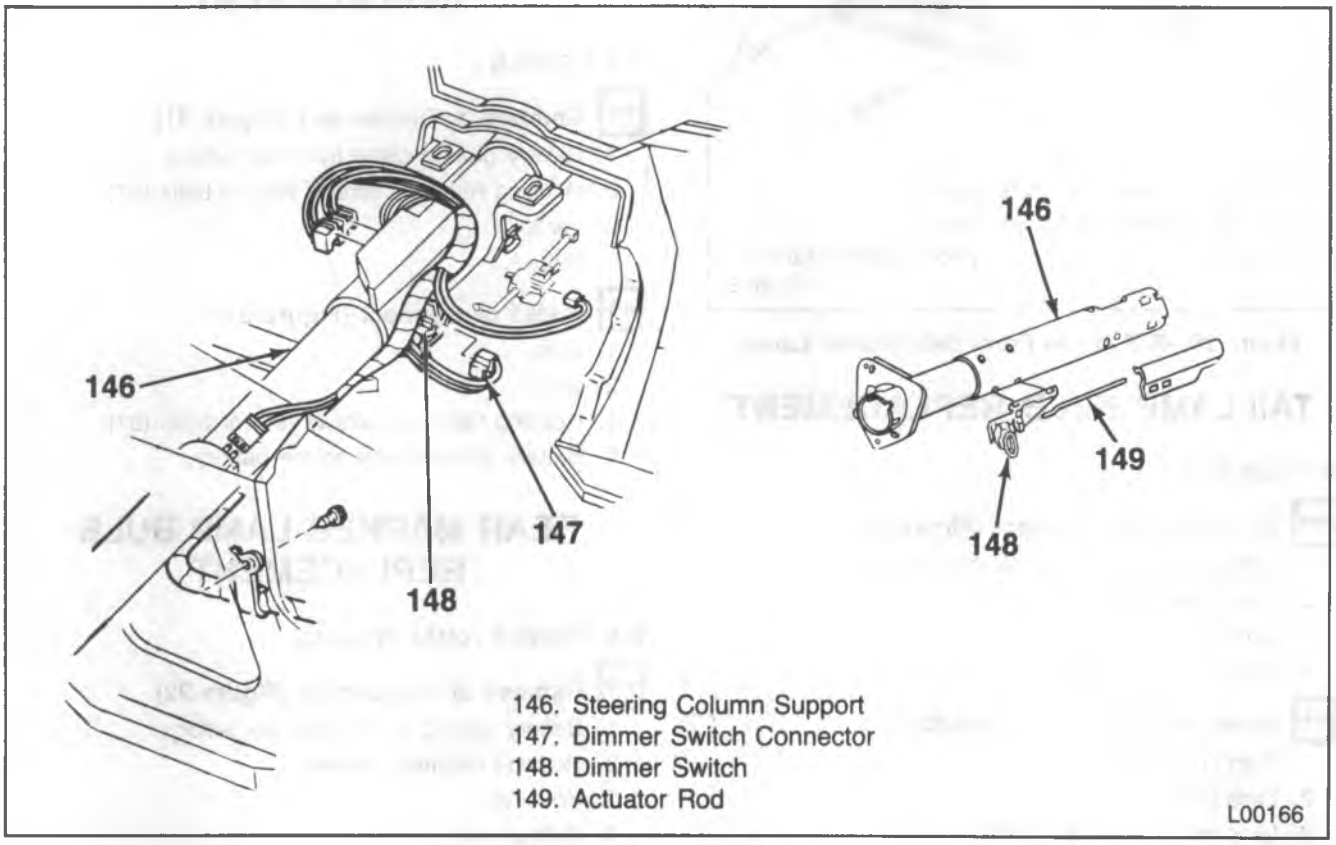

Figure 28—Dimmer Switch

FRONT SIDE MARKER LAMP REPLACEMENT

Remove or Disconnect (Figure 29)

1. Two screws (32).
2. Side marker lamp (31).
3. Bulb (33) from the lamp (31).

Install or Connect (Figure 29)

1. Bulb (33) to the lamp (31).
2. Idle marker lamp (31) into the fender (30).
3. Two screws (32).

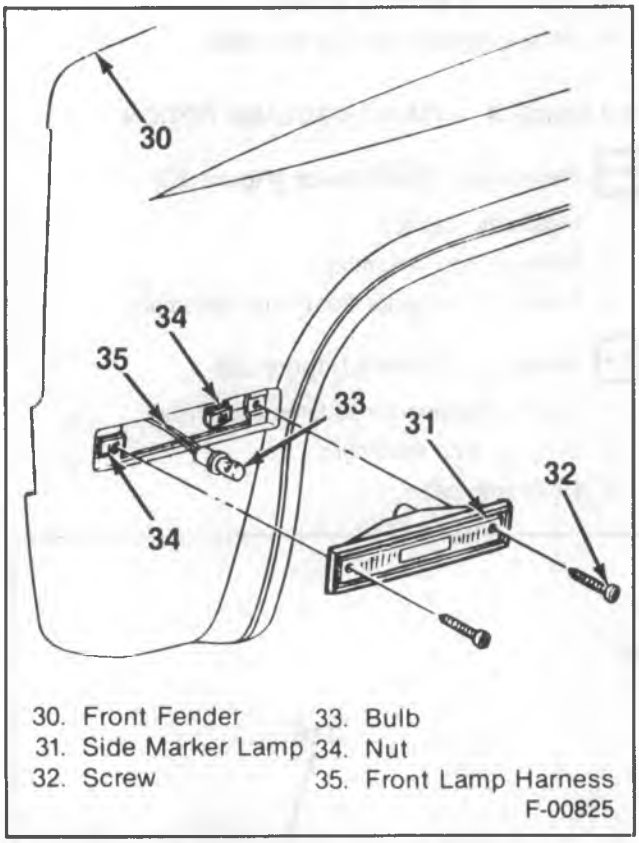

Figure 29—R/V Model Front Side Marker Lamp

TAILLAMP BULB REPLACEMENT

R/V MODELS

Remove or Disconnect (Figure 30)

1. Battery ground cable from the battery.
2. Lens retaining screws (86).
3. Lens (80).
4. Bulb (10, 11 or 16).

Install or Connect (Figure 30)

1. Bulb (10, 11 or 16).
2. Lens (80).
3. Lens retaining screws (86).
4. Battery ground cable to the battery.

REAR LAMP HOUSING AND SEAL REPLACEMENT

R/V MODELS

Remove or Disconnect (Figure 30)

1. Battery ground cable from the battery.
2. Lens retaining screws (86).
3. Lens (80).
4. Housing retaining screws (81).
5. Housing (82).
6. Lamps (10, 11 and 16).
7. Seal (84).

Install or Connect (Figure 30)

1. Seal (84).
   - Install the seal with the tabs (83) pointed forward.
   - Apply adhesive at the four corners of the seal in order to hold the seal in place.
2. Lamps (10, 11 and 16).
3. Housing (82).
4. Housing screws (81).
5. Lens (80).
6. Lens screws (86).
7. Battery ground cable to the battery.

LICENSE PLATE LAMP REPLACEMENT

R/V MODELS

Remove or Disconnect (Figure 31)

1. Battery ground cable from the battery.
2. Housing retaining screws (92) or bolts (97).
3. Lens.
4. Bulb.

Install or Connect (Figure 31)

1. Bulb.
2. Lens.
3. Housing retaining screws (92) or bolts (97).
4. Battery ground cable to the battery.

REAR MARKER LAMP BULB REPLACEMENT

R/V MODELS (DUAL WHEEL)

Remove or Disconnect (Figure 32)

1. Battery ground cable from the battery.
2. Housing retaining screws.
3. Housing.
4. Bulb socket.
5. Bulb.

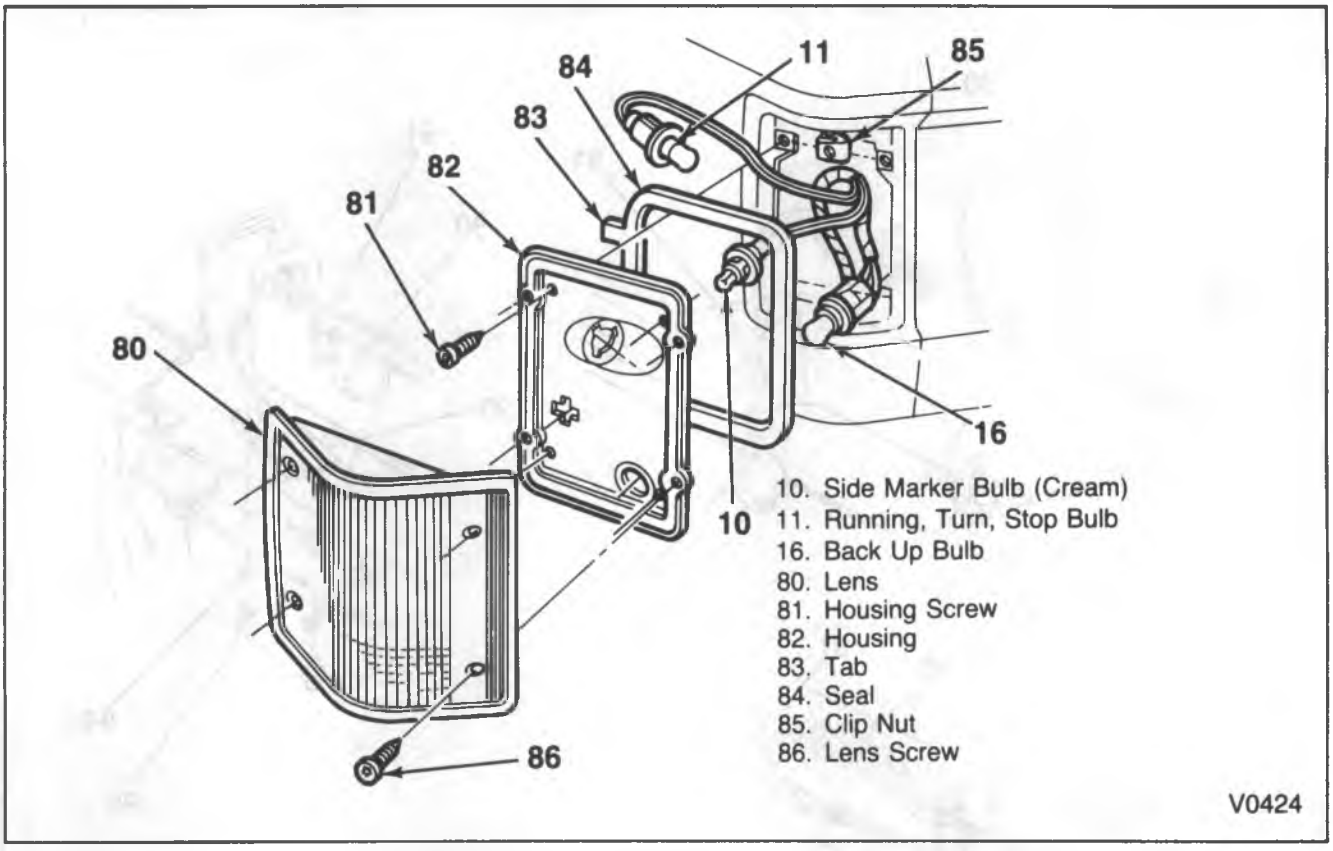

Figure 30—R/V Model Rear Lamp Assembly

Install or Connect (Figure 32)

1. Bulb.
2. Bulb socket into the housing.
3. Housing.
4. Housing retaining screws.
5. Battery ground cable to the battery.

BACKUP SWITCH REPLACEMENT

MANUAL TRANSMISSION

Remove or Disconnect (Figure 33)

1. Battery ground cable from the battery.
2. Backup switch harness (164).
3. Backup switch (163).
4. Seal (162).

Install or Connect (Figure 33)

1. Seal (162).
2. Backup switch (163).
3. Backup switch harness (164).
4. Battery ground cable to the battery.

AUTOMATIC TRANSMISSION

Remove or Disconnect (Figure 33)

1. Battery ground cable from the battery.
2. Switch assembly harness.
3. Switch assembly.
   - Place gear selector in neutral.
   - Squeeze the switch tangs (151) together.
   - Lift out the switch assembly (152).

Install or Connect (Figure 33)

1. Switch assembly.
   - Place gear selector in neutral.
   - Align the actuator (157) with the cutout (159) in the steering column jacket (158).
   - Insert the tangs (151) into the rectangular holes (150).
   - Push down on the switch assembly (152).

   Adjust

   - Switch by moving the gear selector to park. The actuator will ratchet, providing proper switch adjustment.
2. Switch assembly harness.

TAILGATE LAMP AND BULB REPLACEMENT

Remove or Disconnect (Figure 34)

1. Cover (19) by pressing in on sides with fingers.
2. Harness (20) and bulb from lens.
3. Bulb from harness.

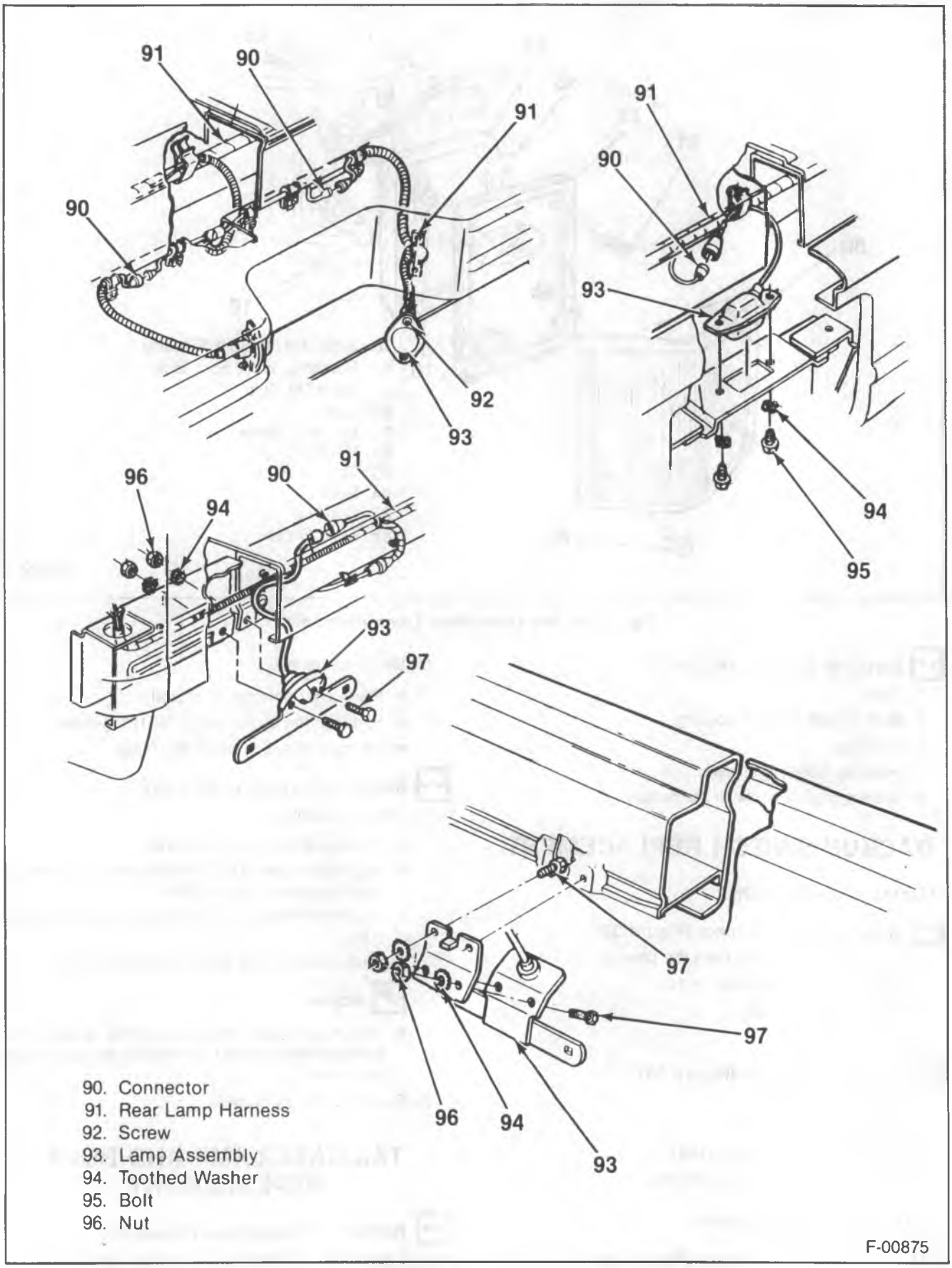

Figure 31—R/V Model License Lamp

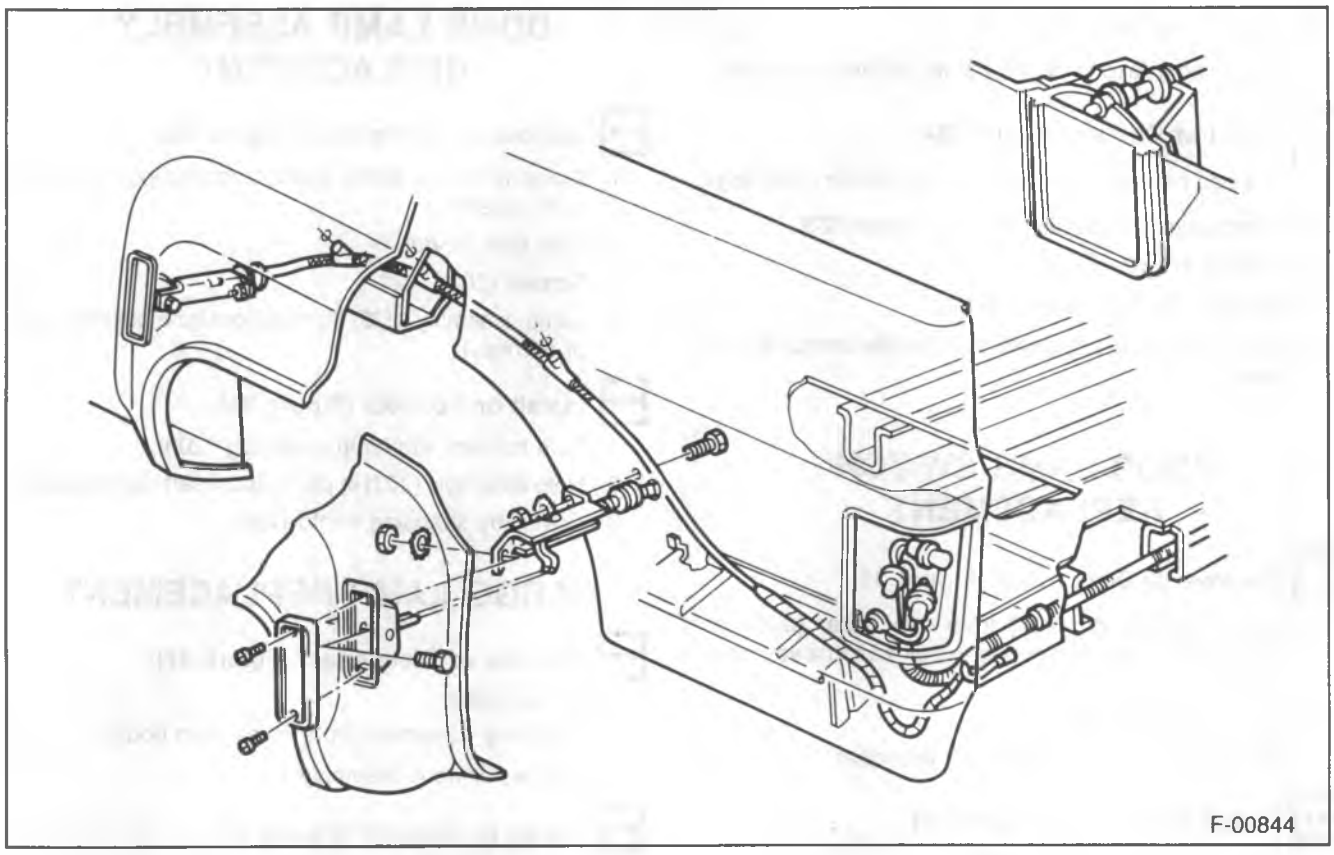

Figure 32—Rear Side Marker Lamp Wiring Harness — R/V Models (Dual Wheel)

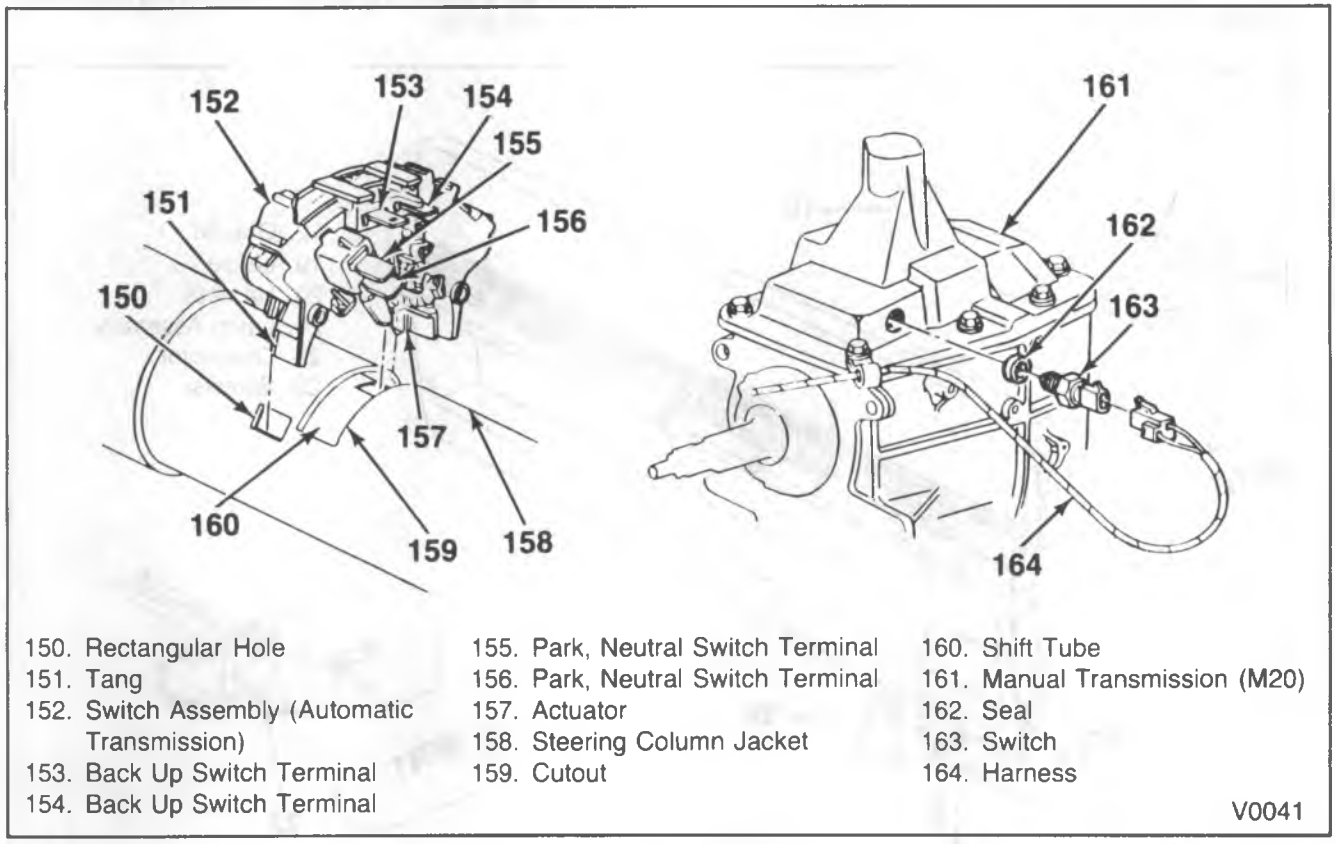

Figure 33—Backup Lamp Switches

4. Lamp assembly screws (23).
   - Feed harness through opening of lamp assembly.

Install or Connect (Figure 34)

- Feed harness through opening of lamp assembly.

1. Lamp assembly to tailgate with screws (23).
2. Bulb onto harness (20).
3. Harness (20) and bulb into lens.
4. Lens onto lamp assembly by carefully snapping into place.

DOOR JAMB SWITCH REPLACEMENT

Remove or Disconnect (Figure 35)

1. Door jamb switch (207) from door pillar (208), or screws (212) from switch then pull switch away from pillar.
2. Connector from switch.
   Be sure not to let harness fall into pillar.

Install or Connect (Figure 35)

1. Connector onto switch (207).
2. Switch (207) into door pillar (208), or set switch in place and insert screws (212).

DOME LAMP ASSEMBLY REPLACEMENT

Remove or Disconnect (Figure 36)

1. Cover (204) by gently squeezing and pulling away from assembly.
2. Bulb from holder.
3. Screws (202).
4. Lamp assembly (203) then pull out bulb holders (part of harness).

Install or Connect (Figure 36)

1. Bulb holders into lamp assembly (203).
2. Hold assembly (203) in place and insert screws (202).
3. Cover, by snapping it into place.

CARGO LAMP REPLACEMENT

Remove or Disconnect (Figure 37)

1. Screws (202).
   Pull lamp assembly (203) away from body.
2. Connector from assembly.

Install or Connect (Figure 37)

1. Connector to assembly (203).
2. Set lamp assembly (203) against body and insert screws (202).

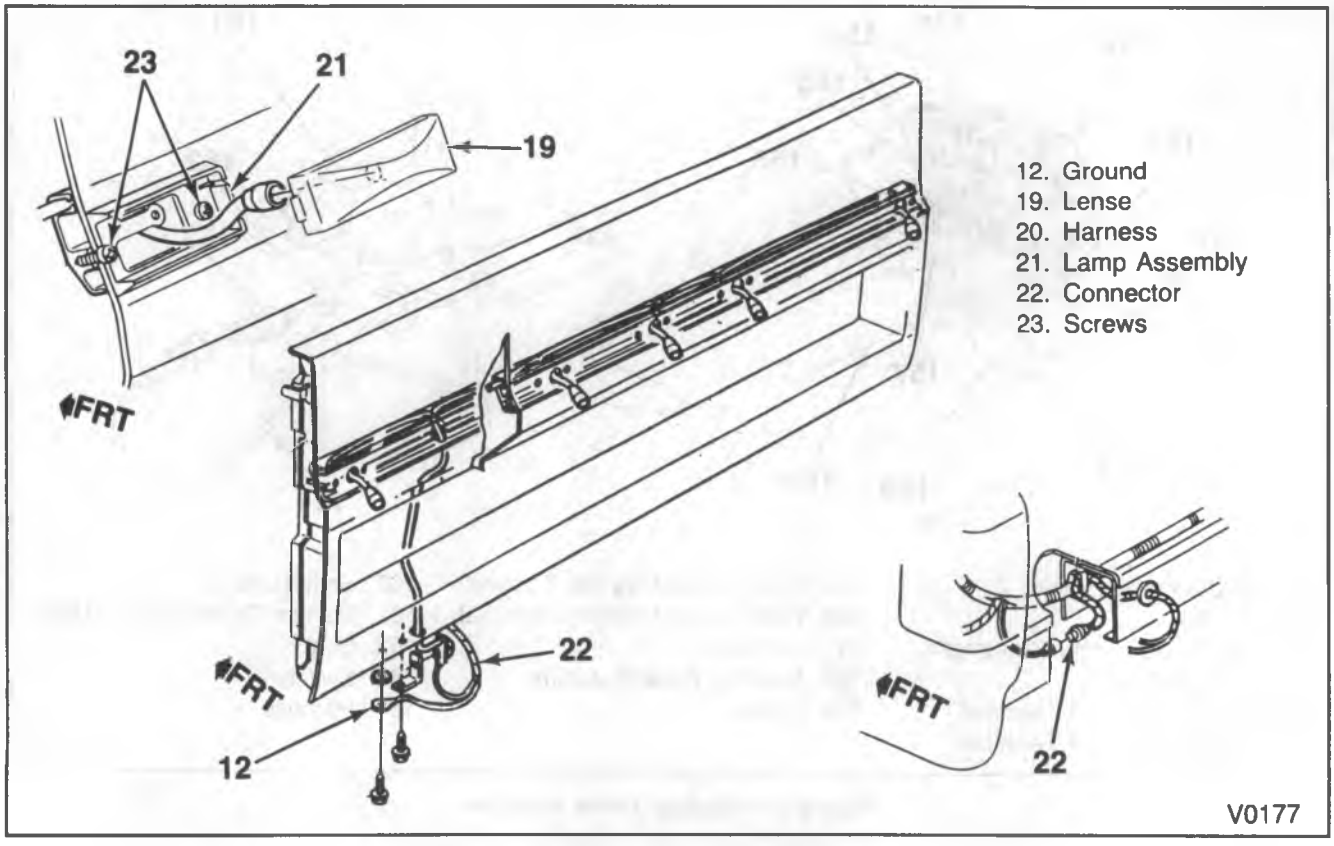

Figure 34—Tailgate Lamp Wiring Harness

CARGO LAMP SWITCH REPLACEMENT

Remove or Disconnect (Figure 37)

1. Screws (209).
2. Switch (210) away from pillar.
3. Connectors (211) from switch (210).

Install or Connect (Figure 37)

1. Connectors (211).
2. Switch (210) and screws (209).

OVERHEAD CONSOLE REPLACEMENT

Remove or Disconnect (Figure 38)

1. Negative battery cable.
2. Screws (201).
3. Console assembly (200).
4. Connector.

Install or Connect (Figure 38)

1. Connector.
2. Console assembly (200).

Tighten

- Screws (201) to 6 N•m (53 in. lbs.)

3. Screws (201).
4. Negative battery cable.

OVERHEAD CONSOLE BULB REPLACEMENT

Rear Bulbs (Spots or Dome)

Remove or Disconnect (Figure 39)

1. Negative battery cable.
2. Screws (202).
3. Cover (203).
4. Bulbs.
   - Bulbs simply pull out of sockets.

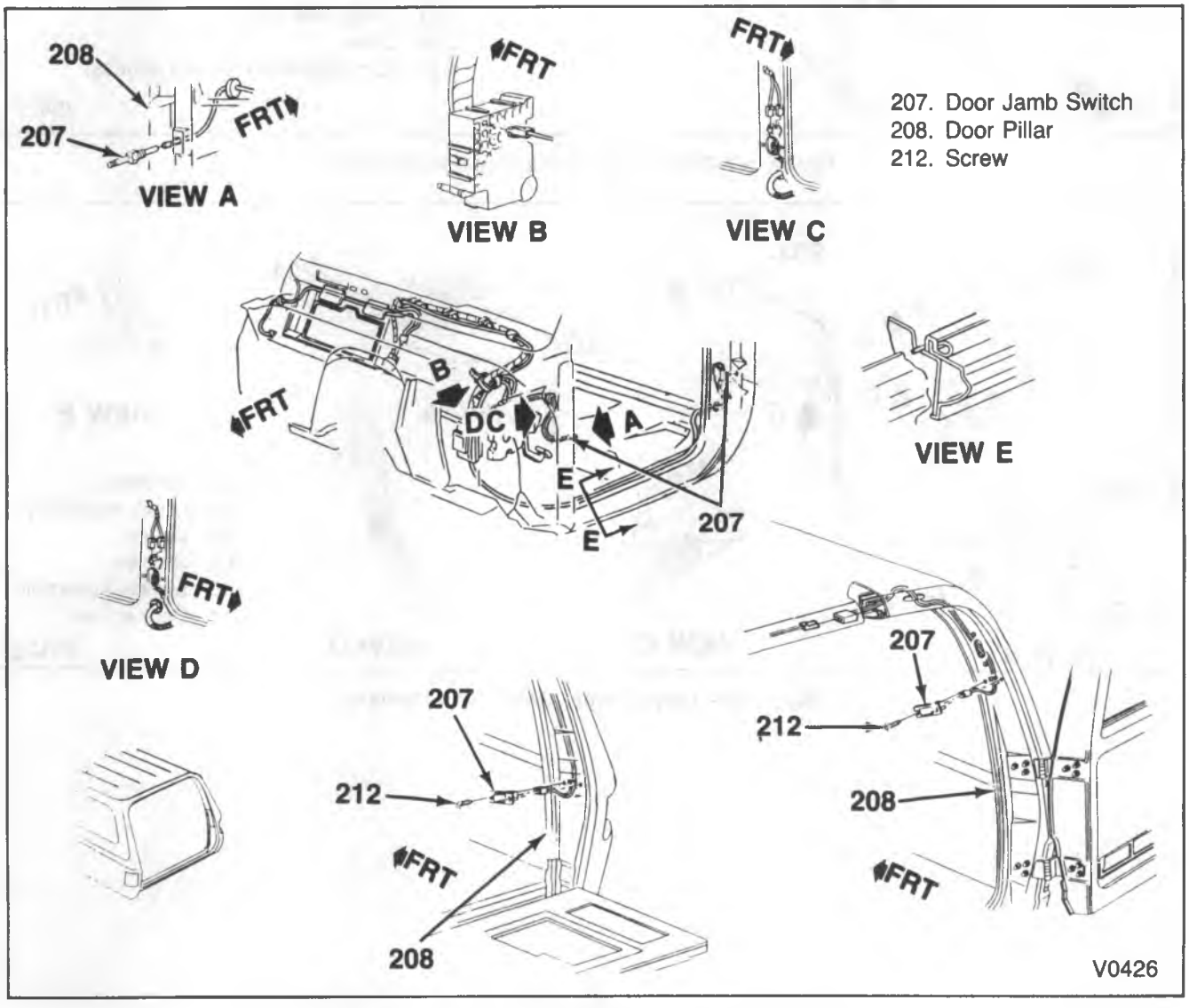

Figure 35—Door Jamb Switches and Harness

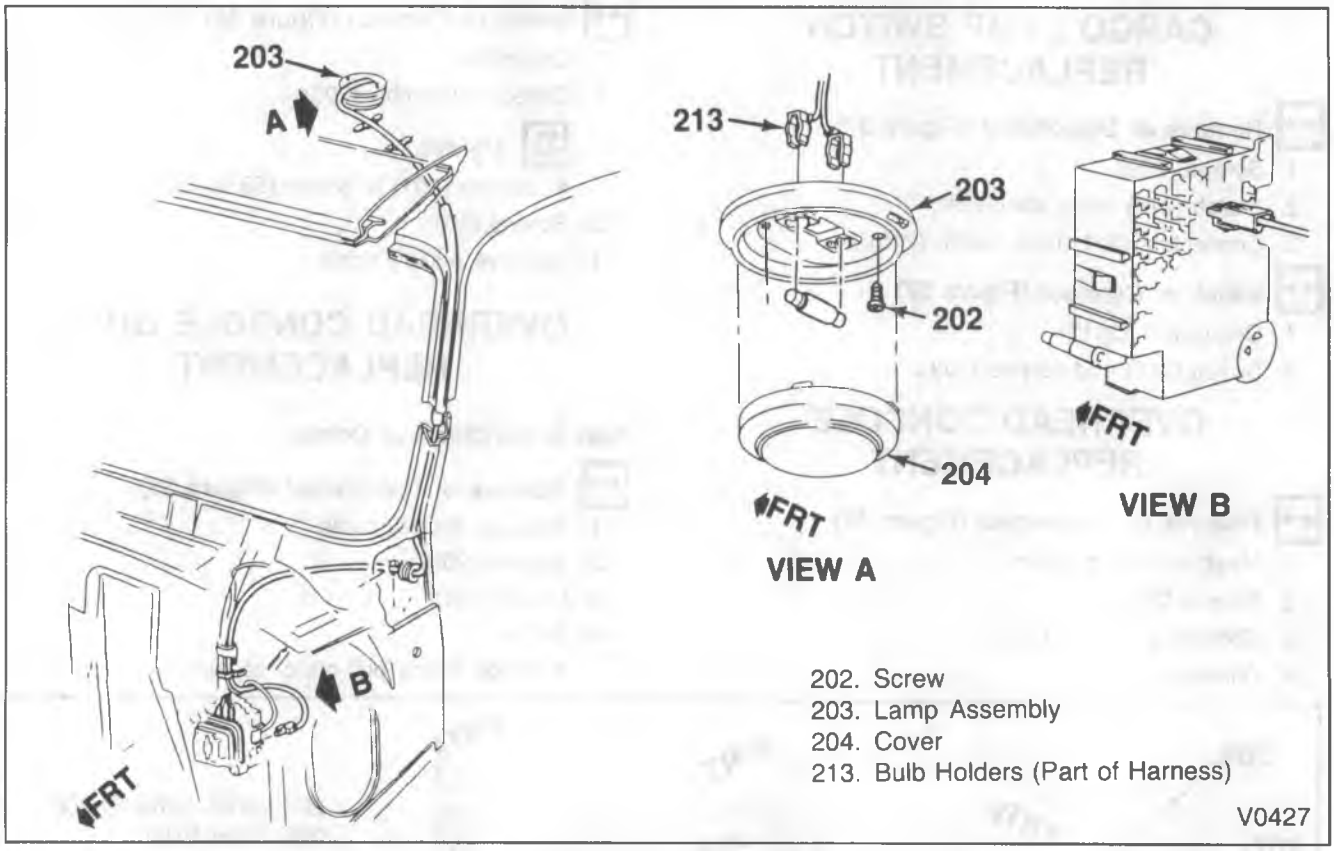

Figure 36 – Dome Lamp Assembly and Harness

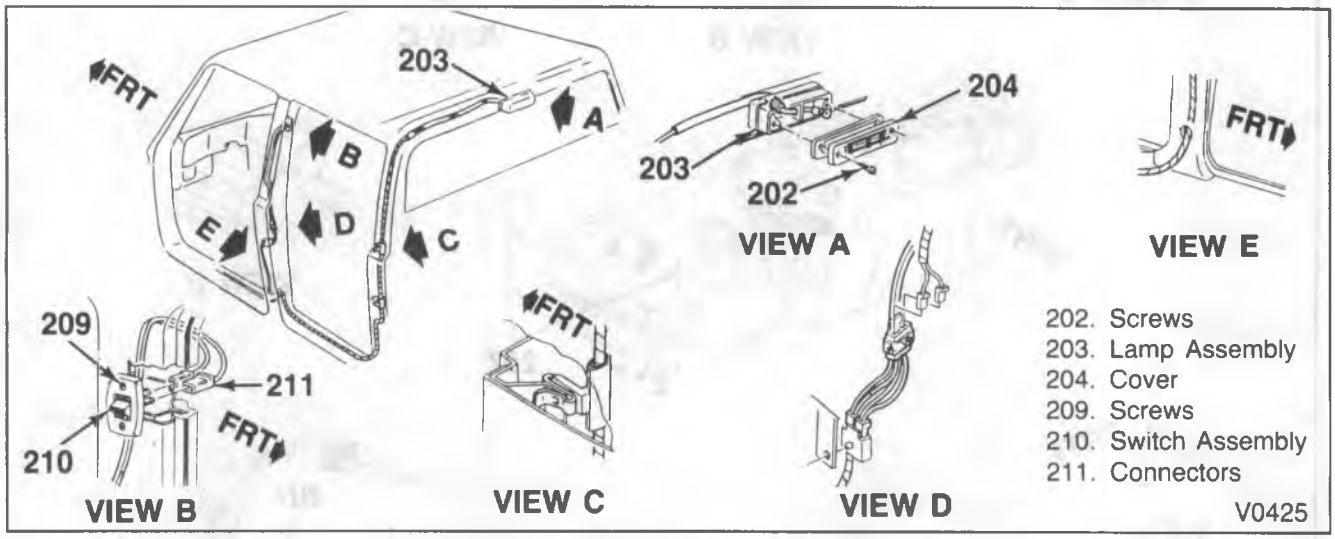

Figure 37 – Cargo Lamp, Switch and Harness

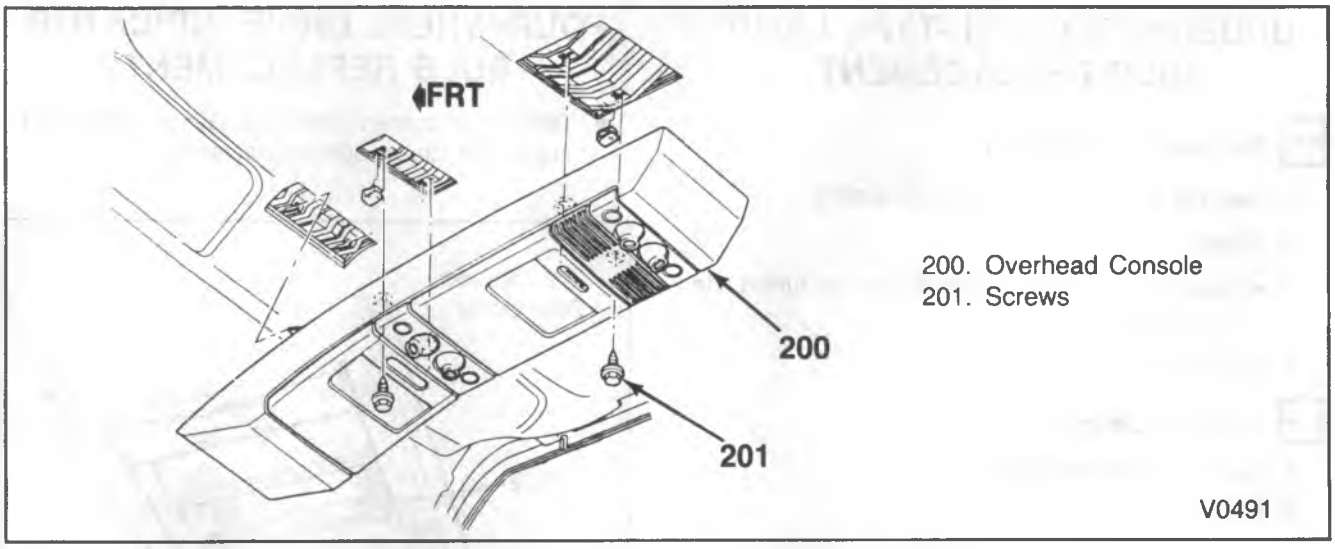

Figure 38—Overhead Console Assembly

Install or Connect (Figure 39)

1. Bulbs.
   - Bulbs push into sockets.
2. Cover (203).
3. Screws (202).
4. Negative battery cable.

Front Bulbs (Spot Lights)

Remove or Disconnect (Figure 40)

1. Console assembly. Refer to "Overhead Console Assembly Replacement" in this section.
2. Bulb holder (204).
   - Grasp bulb holder and rotate it about 1/4 turn to the left to disengage it from the console.
3. Bulb (205) from holder.
   - Simply pull bulb out of holder.

Install or Connect (Figure 40)

1. Bulb (205) into holder.
2. Bulb holder (204) into console.
   - Set holder in place and turn in about 1/4 turn to the right to lock it in place.
3. Console assembly. Refer to "Overhead Console Replacement" in this section.

FRONT FLOOR COMPARTMENT ASSEMBLY REPLACEMENT

Remove or Disconnect (Figure 41)

1. Front tray compartment (206).
   - Snap tray out of floor compartment.
2. Door assembly (207).
   - Remove screws (208).
   - Remove stop strap (209) from door by pulling out the stop strap plug (210).
3. Carpet insert.
   - It will be necessary to fold carpet insert to remove it. The insert is pre-folded to assist in removal and installation.
4. Bolts (211).
5. Compartment assembly (212).

Install or Connect (Figure 41)

1. Compartment assembly (212).
2. Bolts (211).
3. Carpet insert.
   - Fold carpet along pre-folded lines to install.
4. Door assembly (207).
   - Attach screws (208) and stop strap (209) at this time.
5. Front tray compartment (206).
   - Tray snaps into place.

UNDERHOOD REEL-TYPE LAMP REPLACEMENT

Remove or Disconnect (Figure 42)

1. Negative battery cable.
2. Connector (213).
3. Bolt (214).
4. Lamp assembly (215).

Install or Connect (Figure 42)

1. Lamp assembly (215).
2. Bolt (214).
3. Connector (213).
4. Negative battery cable.

UNDERHOOD REEL-TYPE LAMP BULB REPLACEMENT

Remove or Disconnect

- Reel out lamp to ease bulb replacement.

1. Cover.
   - Grab lamp firmly and remove cover by tuning it to the left about 1/8 turn.
2. Bulb from lamp assembly.

Install or Connect

1. Bulb into lamp assembly.
2. Cover.

FOUR-WHEEL DRIVE SHIFT INDICATOR BULB REPLACEMENT

V1 & V2 MODELS

Remove or Disconnect (Figure 43)

1. Shifter knob.
2. Plate (216).
3. Boot (217).
4. Screws (219) and bezel (218).
5. Bulb holder from bezel.
6. Bulb (220) from bulb holder.

Install or Connect (Figure 43)

1. Bulb (220) into holder.
2. Bulb holder into bezel.
3. Bezel (218).
4. Screws (219).
5. Boot (217).
6. Plate (216).
7. Shifter knob.

FOUR-WHEEL DRIVE INDICATOR BULB REPLACEMENT

- Refer to "Instrument Panel and Gages" (Sec. 8C) for instrument cluster bulb replacement.

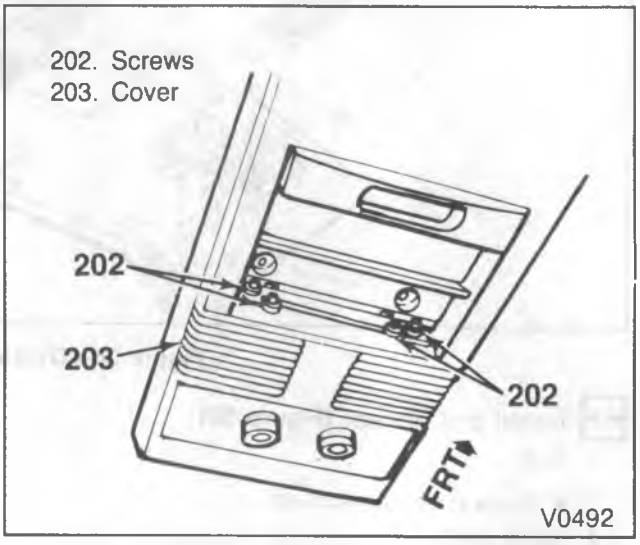

Figure 39—Overhead Console Rear Bulb Replacement

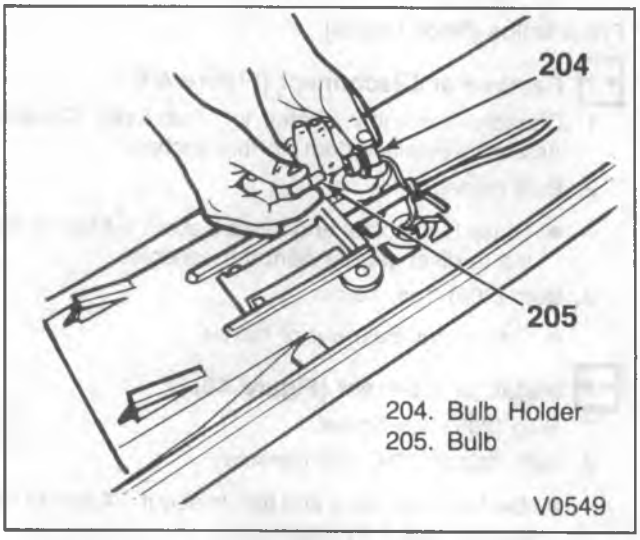

Figure 40—Overhead Console Front Bulb Replacement

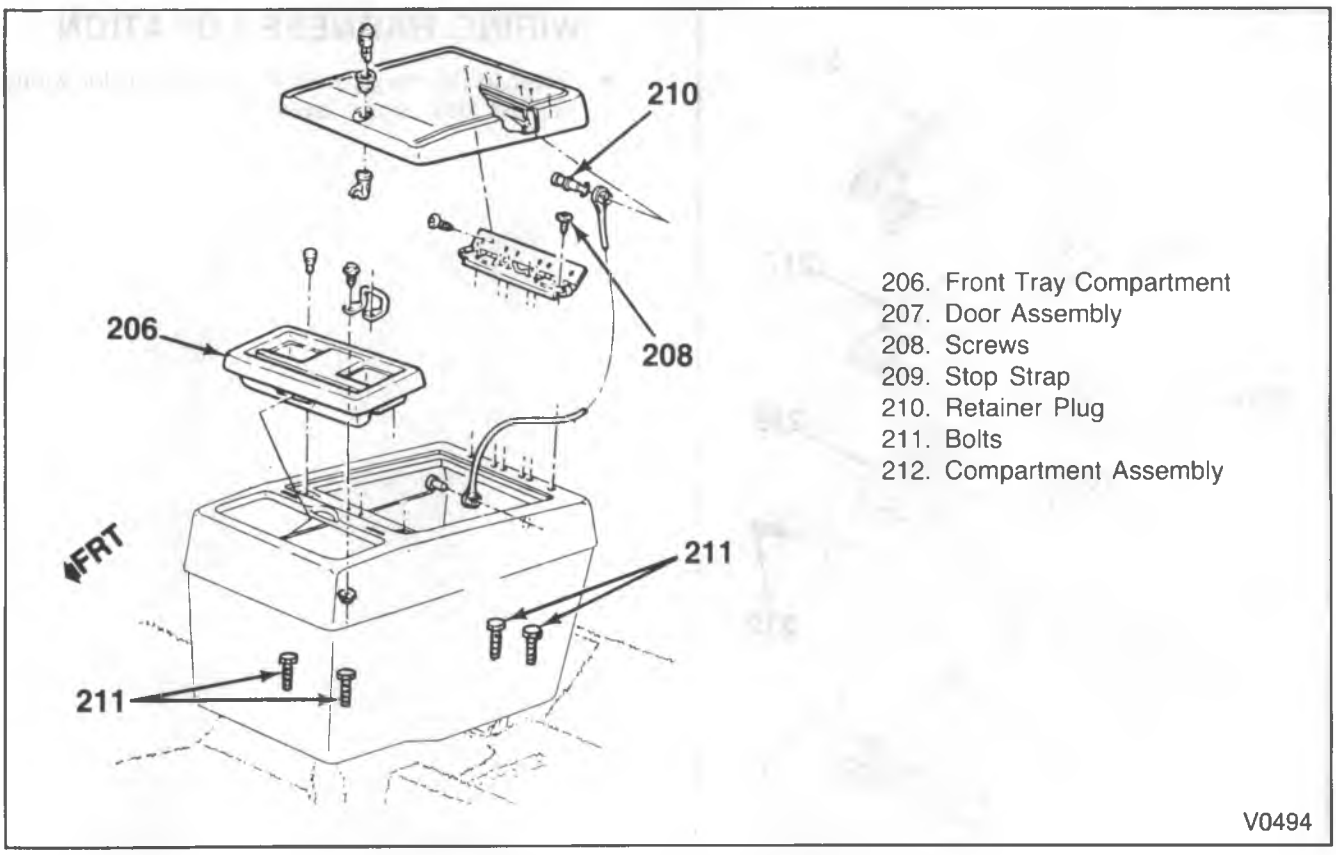

Figure 41—Front Floor Compartment Assembly

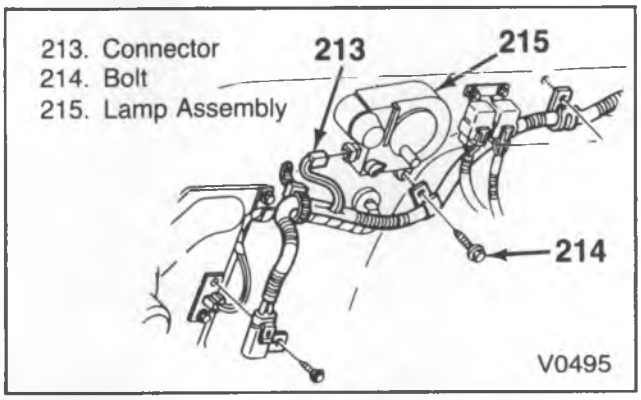

Figure 42—Underhood Reel-Type Lamp Assembly

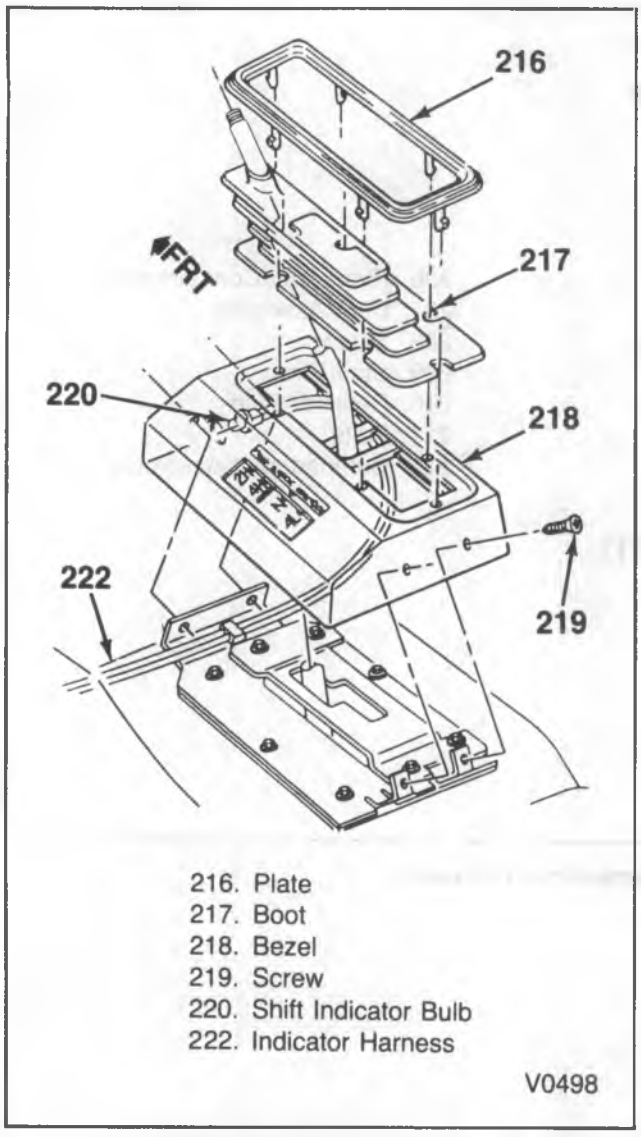

Figure 43—Four-Wheel Drive Shift Indicator Bulb Replacement

WIRING HARNESS LOCATION

- Refer to figures 32 and 44 through 50 for wiring harness location and layout.

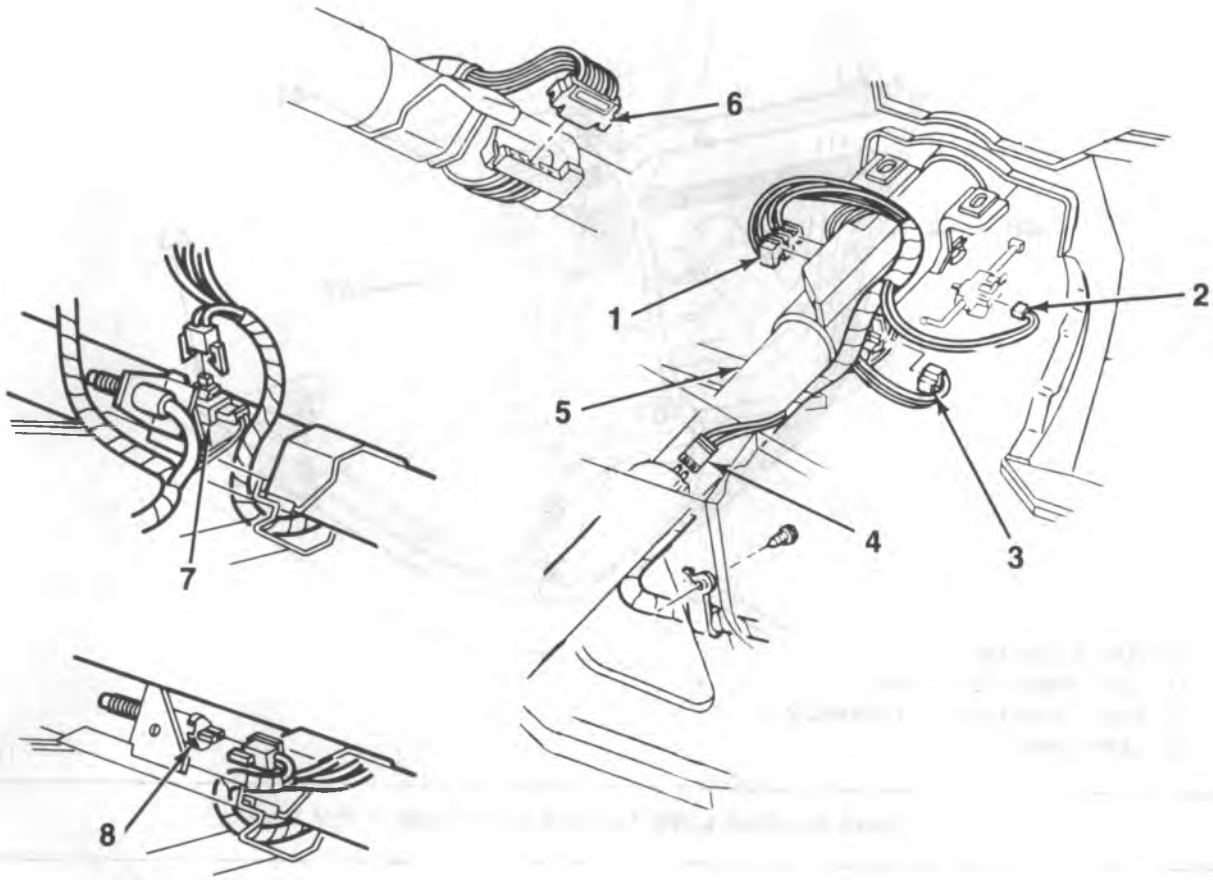

1. Ignition Switch Connector
2. Neutral Switch Connector
3. Dimmer Switch Connector
4. Back Up Switch Connector
5. Steering Column
6. Turn Signal Indicator Connector
7. Stop Lamp Switch Connector – With Cruise Control
8. Stop Lamp Switch Connector – Without Cruise Control

L00124

Figure 44—Steering Column Connectors — R/V Models

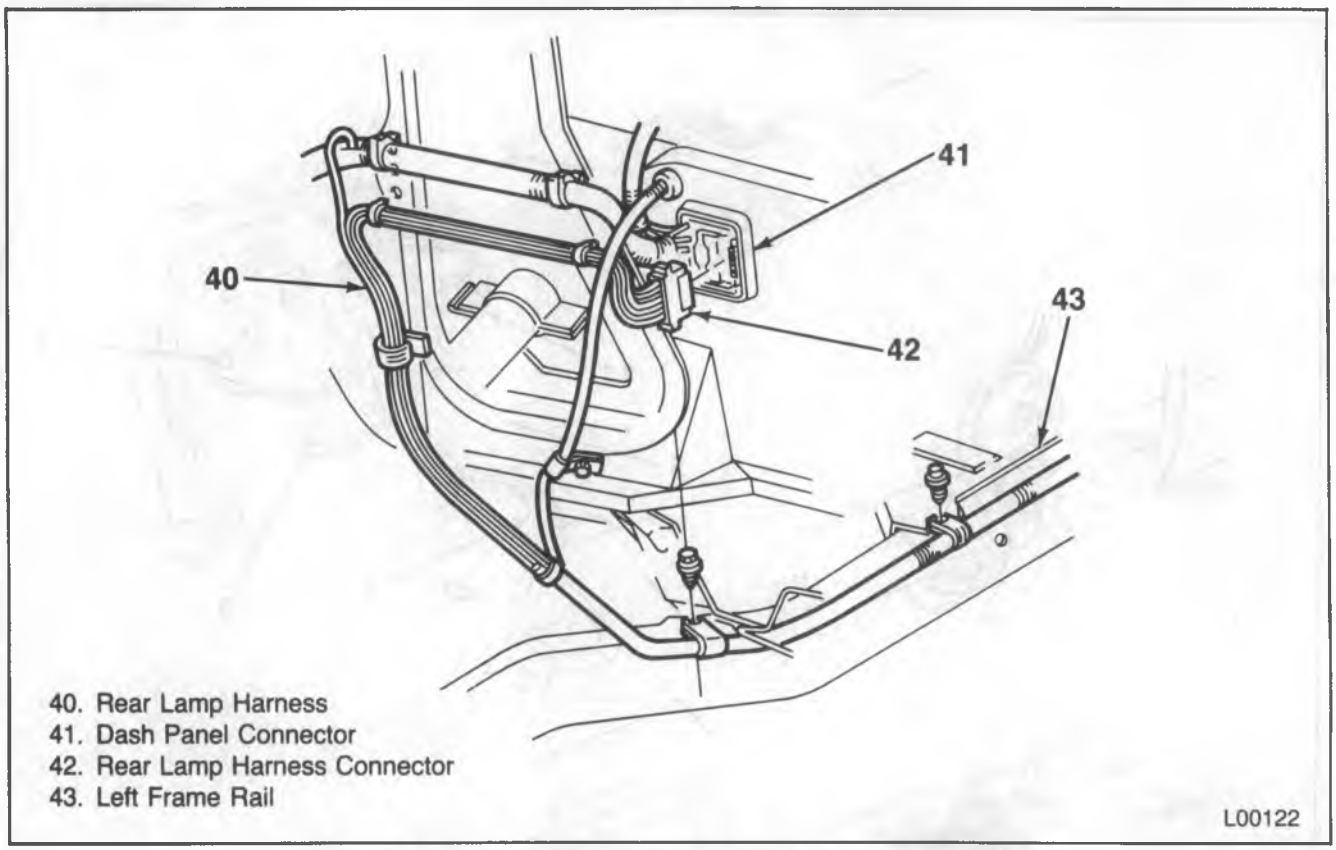

Figure 45—Rear Lamp Harness at the Dash — R/V Models

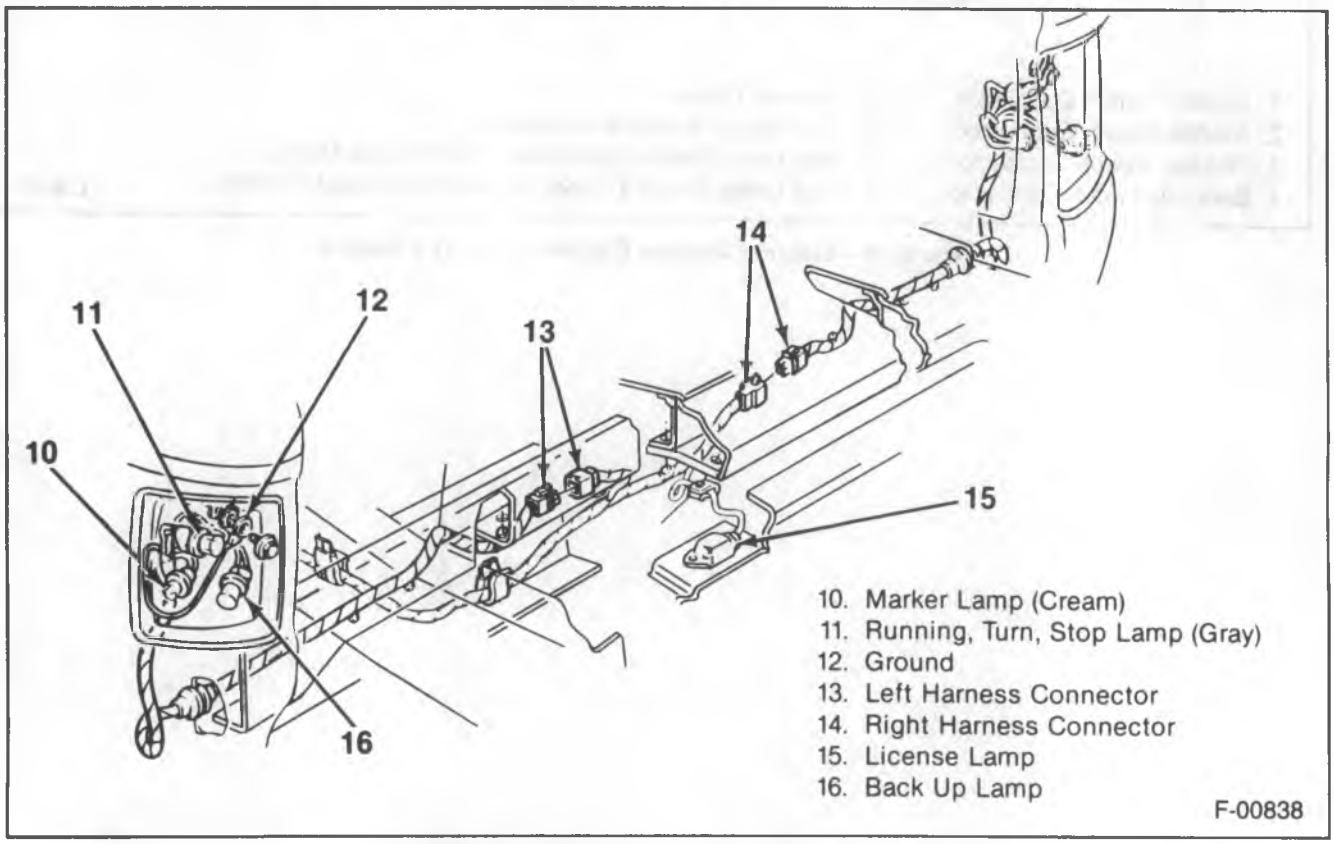

Figure 46—Rear Lamp Harness — Suburban

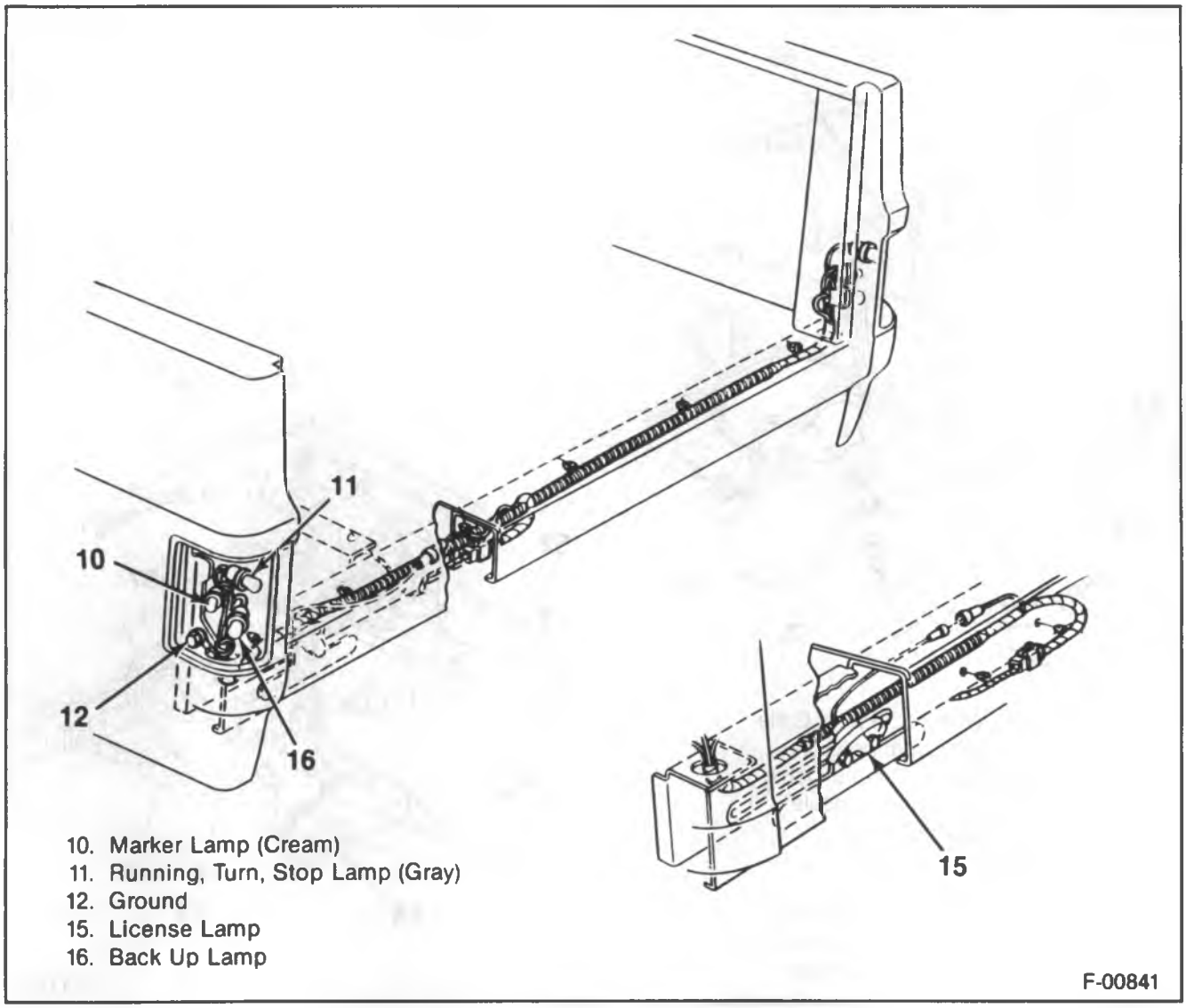

Figure 47—Rear Lamp Harness — Fleetside

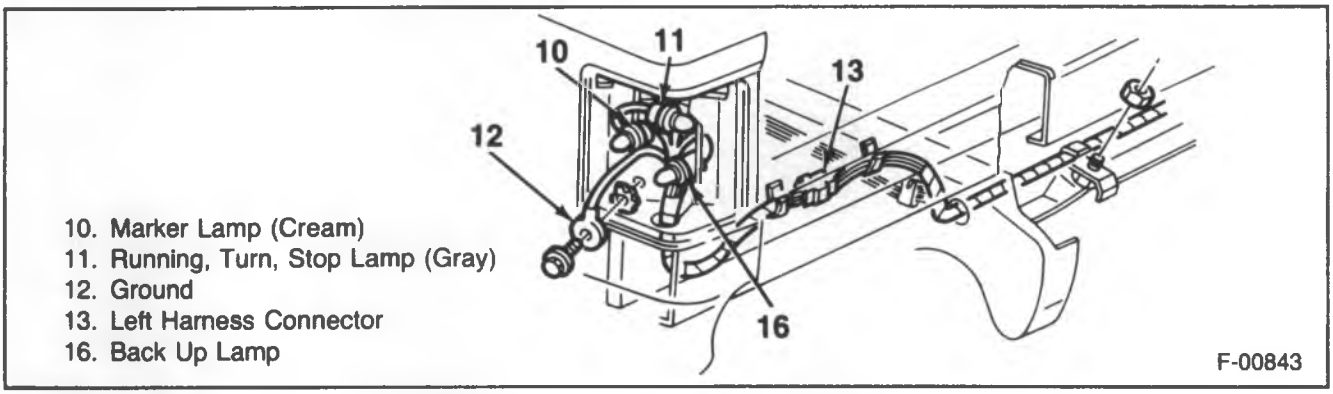

Figure 48—Rear Lamp Harness — Utility Vehicle

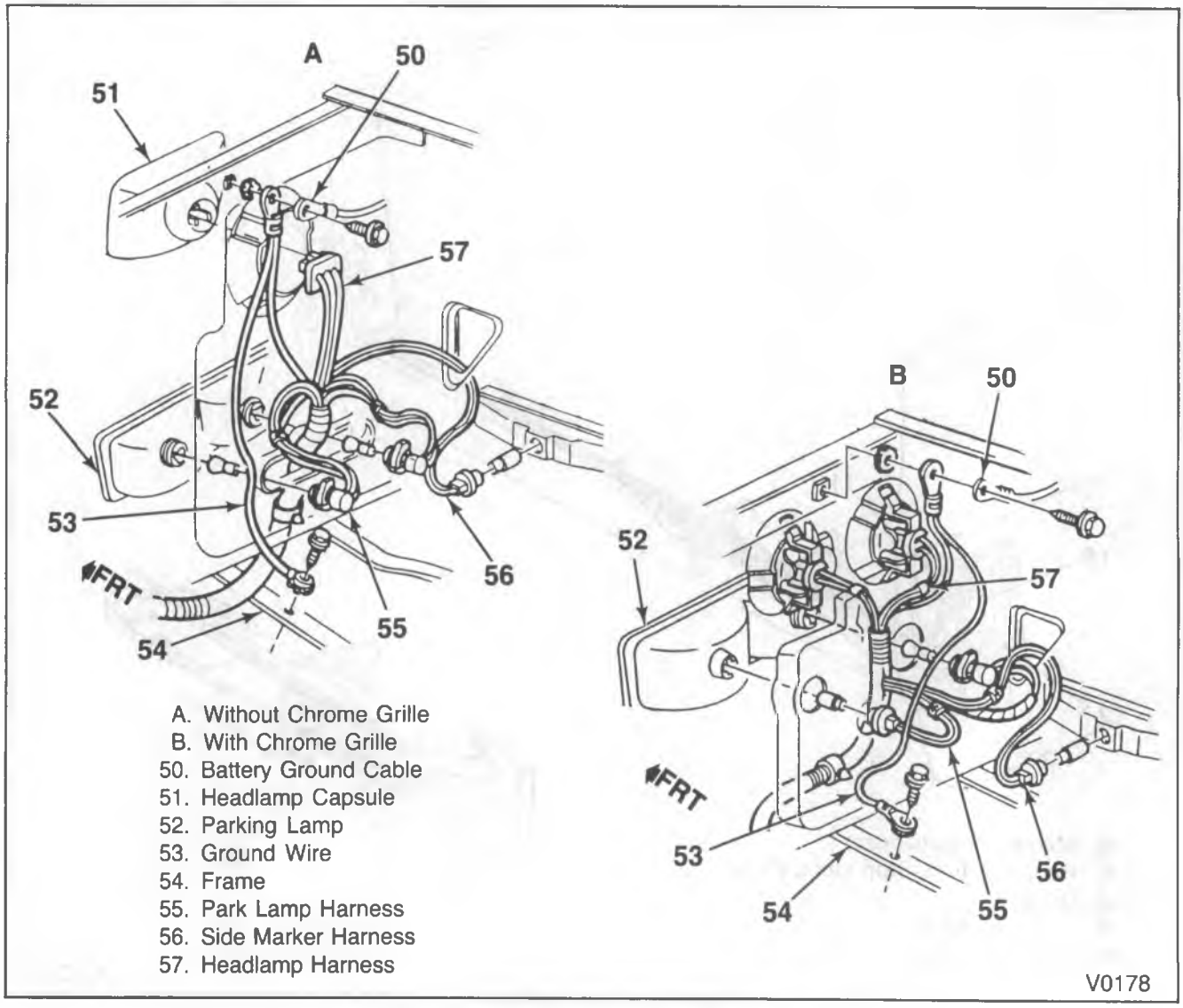

Figure 49—Front Lamp Harness — R/V

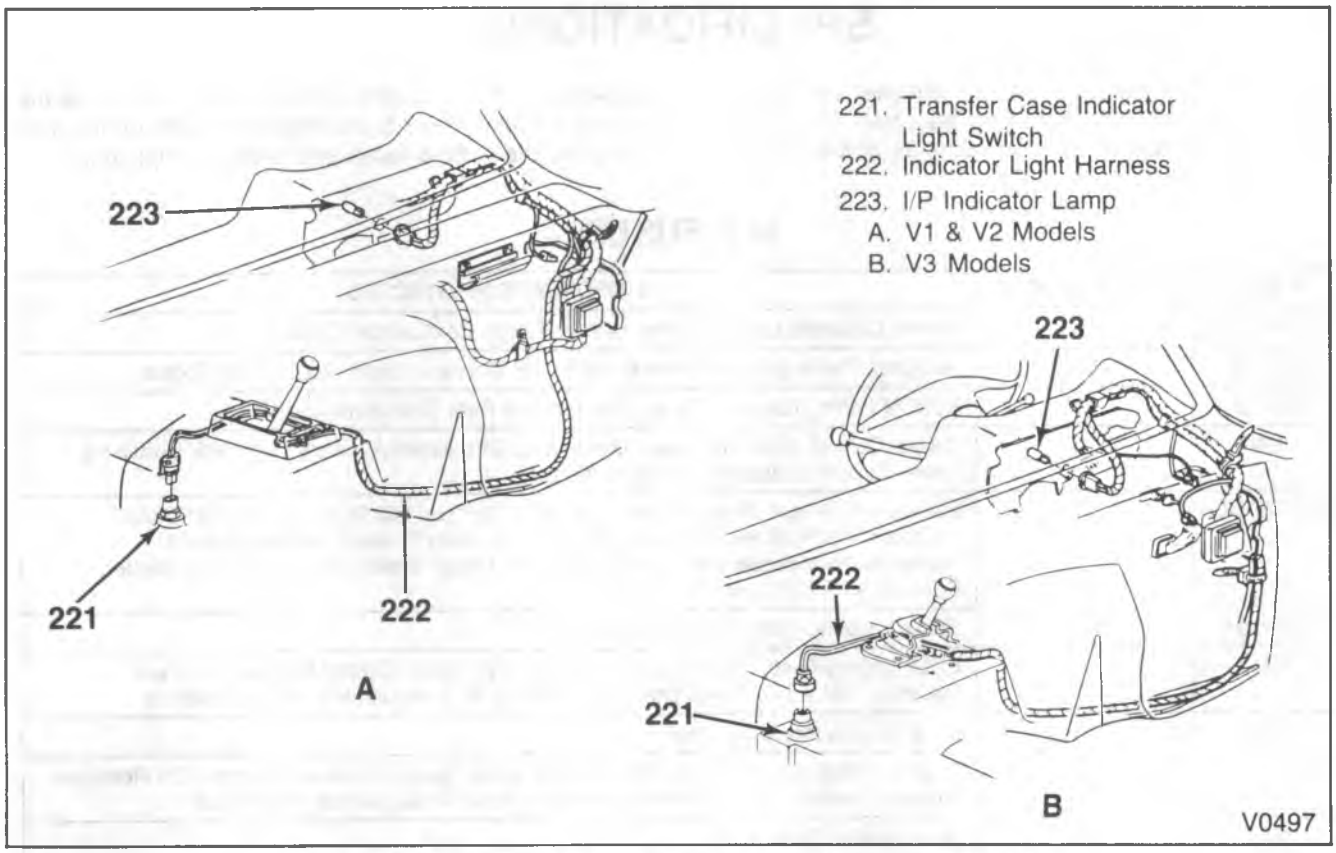

Figure 50—Four-Wheel Drive Indicator Lamp Harness (V-Models)

SPECIFICATIONS

The wiring circuits are protected from short circuits by a breakers, and fusible thermal links ring itself. This greatly reduces the hazard of calls caused fires in the vehicles. Replacement fuses must be of the same amperage as the burned-out fuse. Refer to the following charts for the amp ratings of the various fuses and related components.

R/V FUSES

NAME	RATING (AMPS)	COMPONENTS PROTECTED
HORN/DM	20	Horns, Cigarette Lighter, Dome Lamps, Cargo Box Lamps, Clock
T/L CTSY	20	Taillights, Parking Lights, Marker Lights, I/P Courtesy Light, Roof Marker Lights
ECM B	10	ECM Memory, TBI Fuel Pump, TBI Auxiliary Fuel Tank Switching Valve
IGN	20	Cruise Control, Rear Defogger, Diesel and Carbureted Auxiliary Fuel Tank Switching Valve, Export Overspeed Warning Alarm
GAUGE/IDLE	20	Instrument Cluster, Seat Belt and Lights On Buzzer, TBI Torque Converter Clutch Solenoid, TBI Fuel Pump Priming Module, Auxiliary Coolant Fan Relay, M40 Transmission Kickdown Relay and Solenoid, Diesel Water Sensor and Fuel Heater, Carbureted A.I.R. Divert Solenoid
TURN B/U	15	Backup Lights, Directional Signal Lights
ECM I	10	ECM Ignition Feed, Vehicle Speed Sensor, TBI Spark Control Module, TBI Fuel Injectors, TBI A.I.R. Divert Solenoid, TBI E.G.R. Solenoid or E.V.R.V. Solenoid
CRK	3	ECM Engine Cranking Input
INST LPS	5	Cluster Illumination, Heater Control Illumination, Radio Illumination, Lights On Reminder Module, Transfer Case Shifter Illumination, Rear Defog Switch Illumination
AUX HTR A/C	25	Rear Heater, Rear A/C
HTR A/C	25	Front Heater, Front A/C
CHOKE	20	Carbureted Choke Heater
STOP-HAZ	15	Hazard Flasher and Lights, Seat Belt and Lights On Reminder Buzzer, Stop Lights
RADIO	15	Radio Feed, Auxiliary Battery Relay, Four Wheel Drive Indicator Lamp, Diesel Torque Converter Clutch Solenoid
WIPER	25	Windshield Wiper, Windshield Washer Pump

GMTB-0163-2L

P3-MOTORHOME FUSES

Fuse Name	Rating (Amps)	Components Protected
GAGES	20	Cooling Fan Relay[1], Fuel Cycling Module[1], Low Coolant Module[2], Body Manufacturer "IGN" Tap[3]
HORN, DOME	15	Horn Relay, Dome Lamp, DRL Relay, Body Manufacturer "BAT" Tap
I/P LAMPS	5	I/P Lamps (Cluster and Trans Selector (PRNDL)) Body Manufacturer "LPS" Tap[2].
TRANSMISSION	10	Automatic Transmission Solenoids, TCC Switch.
ECM-BAT	10	PCM[1], Fuel Pump Relay[1], Oil Pressure Switch (To Fuel Pump)[1], TCM[2].
TAIL LPS	20	Tail Lamps, Headlamp Switch, I/P Lamps, Front and Rear Marker Lamps, License Lamps, Parking Lamps.
INJ	7.5	Throttle Body Injectors[1].
HTR	25	DRL Relay, DRL Module, Body Manufacturer "HTR" Tap[2]
ACC-RADIO	10	Body Manufactuer "ACC" Tap[3]
STOP-HZD	15	Stop Lamps, Hazard Flasher
ECM-CRNK	10	EVRV Module[1], PCM[1], TCM[2]
WIPER	25	Windshield Wiper, Washer
ALT	20	Cruise Control[1], Cold Advance Temp. Switch[2], Fuel Heater[2], Water in Fuel Sensor[2], I/P Cluster Power, Alternator Field, DRAC
TURN-B/U	15	Turn Signal Lamps, Back-up Lamps.

[1]Gas Engine
[2]Diesel Engine
[3]When used by Body Manufactuer

P3-COMMERCIAL FUSES

Fuse Name	Rating (Amps)	Components Protected
GAGES	20	Fuel Cycling Module[2,4], Low Coolant Module[5,6], Body Manufacturer "IGN" Tap[3]
PWR		Not utilized
HORN, DOME	15	Horn Relay, Dome Lamp, DRL Relay, Body Manufacturer "BAT" Tap[6].
I/P LPS	5	I/P Lamps (Cluster and Trans Selector (PRNDL)) Body Manufacturer "LPS" Tap[2].
TRANS	10	Automatic Transmission Solenoids[3,4,6], TCC Switch[3,4,6].
ECM-BAT	10	PCM[3,4], Fuel Pump Relay[1,2,3,4], Oil Pressure Switch (To Fuel Pump)[1,2,3,4], TCM[6], ECM[1,2].
TAIL LPS	20	Tail Lamps, Headlamp Switch, I/P Lamps (I/P LPS Fuse), Front and Rear Marker Lamps, License Lamps, Parking Lamps.
INJ	7.5	Throttle Body Injectors[1,2,3,4]
HTR	25	DRL Relay, DRL Module, Body Manufacturer "HTR" Tap[2]
ACC-RADIO	10	Body Manufactuer "ACC" Tap[3]
STOP-HZD	15	Stop Lamps, Hazard Flasher
ECM-CRNK	10	EVRV Module[2,4], PCM[3,4], TCM[6], ESC[1,2], DRAC[1,3,4]
AUX		Not utilized
WIPER	25	Windshield Wiper, Washer
ALT	20	Cold Advance Temp. Switch[5,6], Fuel Heater[5,6], Water in Fuel Sensor[5,6], I/P Cluster Power, Alternator Field, DRAC[2,5,6] EGR MOD[1,3]
CRNK	10	ECM[1,2]
TURN-B/U	15	Turn Signal Lamps, Back-up Lamps.

[1]Gas Engine (V6) and Manual Transmission.
[2]Gas Engine (V8) and Manual Transmission.
[3]Gas Engine (V6) and Automatic Transmission.
[4]Gas Engine (V8) and Automatic Transmission.
[5]Diesel Engine and Manual Transmission.
[6]Diesel Engine and Automatic Transmission.

GMTB-3133-2A

CIRCUIT BREAKERS

The headlamp circuits are protected by a circuit breaker in the light switch. An electrical overload on the breaker will cause

to go on and off, or in some cases to remain off.

In addition to a fuse, the windshield wiper motor is also protected by a circuit breaker. If the motor overheats, due to overloading caused by heavy snow, etc., the wipers will remain stopped until the motor cools.

Device or Circuit Protected	Models	Amps.	Location
Headlamp and parking lamp circuit	RV	15	Lamp switch
Tailgate window motor, side window motor	RV	30	Dash (forward side)
Power door locks, rear defogger and tailgate power window key switch	RV	30	Fuse Panel
Body Builders "Power" Tap	P	30	Fuse Panel
Body Builder "AUX PWR" (Diesel only)	P	30	Fuse Panel

GMTB-3032-1A

LAMPS

RV

USED IN	QUAN.	TRADE #	POWER
Dome Lamps:			
Cab	1	1004	15 CP
Utility & Suburban	1	211-2	12 CP
Oil Pressure indicator lamp[1]	1	168	3 CP
Generator indicator lamp[1]	1	168	3 CP
Instrument cluster lamps[2]	5	168	3 CP
Headlamp beam indicator lamp	1	168	3 CP
Lamp assembly—tail & stop lamp	2	2057	3-32 CP
License lamp[4]	1	67	4 CP
Directional signal (front park lamps)[5]	2	3057	3-32 CP
Head lamps	2	6014	50-60 W
Temperature indicator lamp	1	168	3 CP
Directional signal indicator lamp	2	168	3 CP
Clearance and marker lamps	4	168	3 CP
Brake warning indicator lamp	1	168	3 CP
Transmission control (auto)	1	1445	0.7 CP
Backing lamp	2	1156	32 CP

USED IN	QUAN.	TRADE #	POWER
Heater or A/C illum. lamp	1	161	1 CP
Corner marker lamps (platform)	7	67	4 CP
Cargo lamp (RV cab)	1	1142	21 CP
Radio dial lamp — AM	1	216	1 CP
— AM/FM	1	216	1 CP
Courtesy lamp	1	1003	15 CP
Windshield wiper switch lamp	1	161	1 CP
Clock lamp	1	168	3 CP
Rear identification[6] lamp	10	1895	2 CP
Underhood lamp	1	93	15 CP
Seat belt warning lamp	1	168	3 CP
Cargo/dome lamp	2	211-2	12 CP
Four wheel drive indicator lamp	1	161	1 CP
Choke heater indicator lamp	1	168	3 CP

[1]On RV instrument clusters only.
[2]3 lamps used on instrument cluster on RV w/o gages.
[3]Double filament sealed beam 60W high beam, 50W low beam.
[4]2 lamps used with step bumper
[5]1157 NA, 2.2-24 CP on RV models.
[6]Wideside Pickup.

TB-3208-2A

P3-MOTORHOME

Used In	Quantity	Trade No.	Power
Headlamp (2 Headlamp System) (4 Headlamp System)	2 2 2	6052 4651 4652	55/65W 50W 60/40W
Park & Signal Lamp	2	2057	32-2CP
Tail & Stop Lamp[1]	N/A	N/A	N/A
License Lamp	2	67	4CP
Marker Lamp[1]	N/A	N/A	N/A
Back-up Lamp[1]	N/A	N/A	N/A
I/P Illumination Lamp	6	PC194	2CP
Directional Signal Indicator Lamp	2	PC194	2CP
High Beam Indicator Lamp	1	PC74	.7CP
Service Brake Warning Ind. Lamp	1	PC74	.7CP
Park Brake Warning Ind. Lamp	1	PC74	.7CP
Transmission Control Ill. Lamp	1	73	.3CP
Low Coolant Indicator Lamp[2]	1	PC74	.7CP
Glow Plug Indicator Lamp[2]	1	PC74	.7CP
Water in Fuel Indicator Lamp[2]	1	PC74	.7CP
Service Engine Soon Ind. Lamp	1	PC74	.7CP
Transmission Indicator Lamp[2]	1	PC74	.7CP
Fasten Safety Belts Ind. Lamp[3]	1	PC74	.7CP
Door Ajar Indicator Lamp[3]	1	PC74	.7CP
Daytime Running Lights Ind. Lamp[4]	1	PC118	.7CP

N/A = Not Available
[1]Refer to Body Manufacturer
[2]Diesel Engines only
[3]When used by Body Manufacturer
[4]Canadian only

GMTB-3131-2A

PARTS INFORMATION

PART NAME	GROUP
Headlamp Switch	2.485
Headlamp Dimmer Switch (Pivot)	2.459
Stoplamp Switch	2.447
Chassis Wiring Harness	2.480
Daytime Running Lamp Module	2.560
Taillamp Lens	2.682
Side Marker Socket	2.575
Parking Lamp Socket	2.596
Back Up Lamp Socket	2.697
Back Up Lamp Switch	2.698
License Lamp Lens	2.709
Headlamp Sealbeam	2.727
Headlamp Capsule	2.725
Turn Signal Lamp Switch	2.895
Turn Signal Control Lever	2.897
Cluster Lamp Bulb (Chart)	9.735

GMTB-3164-2A

SPECIAL TOOLS

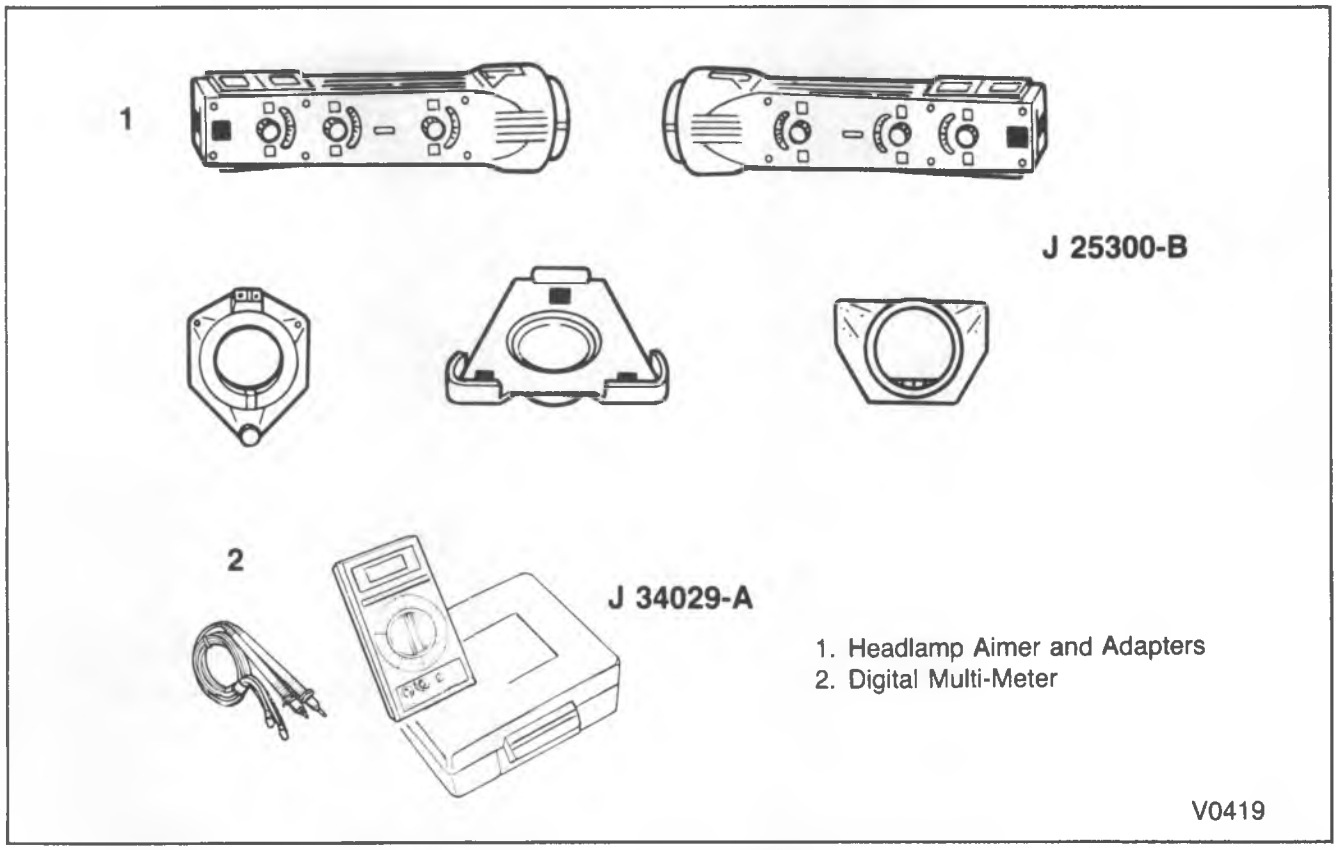

Figure 51—Special Tools

SECTION 8C

INSTRUMENT PANEL AND GAGES

CONTENTS

SUBJECT	PAGE
Description	8C- 1
Speedometer	8C- 1
Fuel Gage	8C- 1
Oil Pressure Gage	8C- 2
Temperature Gage	8C- 2
Voltmeter	8C- 2
Engine Control/Ignition Switch	8C- 2
Headlamp Switch	8C- 2
Diagnosis of Speedometer System	8C- 3
Diagnosis of the Fuel Gage	8C- 4
Diagnosis of the Oil Pressure Gage	8C- 5
Diagnosis of the Temperature Gage	8C- 6
Diagnosis of the Voltmeter	8C- 7
On-Vehicle Service	8C- 7
Handling Electrostatic Discharge Sensitive Parts	8C- 7
Speedometer Replacement	8C- 8
Vehicle Speed Sensor Replacement	8C-10
Digital Ratio Adaptor Controller (DRAC) Replacement	8C-11
Fuel Gage Replacement	8C-12
Fuel Sender Unit Replacement	8C-13
Temperature Gage Replacement	8C-13
Temperature Gage Sensor Replacement	8C-14
Oil Pressure Gage Replacement	8C-14
Oil Pressure Gage Sensor Replacement	8C-15
Voltmeter Replacement	8C-15
Instrument Cluster Replacement	8C-16
Instrument Cluster Bulb Replacement	8C-16
Laminated (Printed) Circuit Replacement	8C-16
ignition Switch Replacement	8C-17
Headlamp Switch Replacement	8C-17
Special Tools	8C-17

DESCRIPTION

SPEEDOMETER

The electromechanical speedometer replaces the cable driven speedometer on R/V&P - models. Components of the speedometer system includes the speedometer head, vehicle speed sensor (VSS), digital ratio adaptor controller, and the applicable wiring.

The speedometer head is an electromechanical device using integrated circuits that control the air core speedometer and stepper motor odometer.

The vehicle speed sensor is a permanent magnet signal generator located on the transmission output shaft. This analog signal, which is proportional to output shaft speed, is sent to the digital ratio adaptor controller.

The digital ratio adaptor controller (DRAC) is a solid state device which changes the analog signal supplied by the VSS to a digital signal. This digital signal is then fed to the speedometer.

The digital ratio adaptor controller is matched to the final drive of each vehicle. If the final drive ratio is changed (including tire size) for any reason, the DRAC must also be changed to match. This will ensure accurate speedometer readings. The parts book lists DRAC's (or Buffers) for a variety of tire sizes and rear axle ratios. Also, an incorrect DRAC will affect Rear Wheel Anti-Lock brakes (RWAC), Electronic Control Module (ECM), and the cruise control module.

FUEL GAGE

The fuel gage is an electrical, current sensing type of indicator. It has two coils in it. One coil sets up a constant magnetic field. The other coil has a varying magnetic field which is varied by the rheostat attached to a float in the fuel tank. A magnet, attached to a pointer, is located between the two coils. The magnet will establish a position which is controlled by the magnetic fields of the two coils. Refer to figure 1 for diagnosis.

OIL PRESSURE GAGE

The oil pressure gage displays the engine oil pressure. The gage is electrical. The sender is a variable resistor which controls the current passing through the gage. Refer to figure 2 for diagnosis.

TEMPERATURE GAGE

This gage displays the temperature of the engine coolant. It is an electrical gage. The gage's sender is a variable resistor that controls the current passing through the gage. Refer to figure 3 for diagnosis.

VOLTMETER

The voltmeter measures available battery voltage. The voltmeter uses an internal shunt. Refer to figure 4 for diagnosis.

ENGINE CONTROL/IGNITION SWITCH

The engine control/ignition switch is located in the steering column on the right side just below the steering wheel. The electrical switching portion of the assembly is separate from the key and lock cylinder. However, both are synchronized and work in conjunction with each other through the action of the actuator rod assembly.

For a complete explanation of the key and lock cylinder, and the actuator rod assembly, refer to STEERING COLUMN - STANDARD (SEC. 3F1) or STEERING COLUMN - TILT (SEC. 3F2).

The ignition and starting switch (gasoline engine) is key operated through the actuator rod assembly to close the ignition primary circuit and to energize the starting motor solenoid for cranking.

The engine control switch (diesel engine) actuates the glow plugs and glow plug relay assembly when the switch is turned to the run position. A "GLOW PLUGS" lamp on the instrument panel remains lit until the glow plugs have preheated the combustion chamber. Turning the engine control switch to the start position after the "GLOW PLUGS" lamp turns off engages the starter motor solenoid for cranking.

The connections to the engine control/ignition switch are shown in the Wiring Diagrams Booklet. The charts included on the diagrams show how the switches are internally connected in each switch position.

HEADLAMP SWITCH

The headlamp switch is a multi-position switch which controls the headlamps, taillamps, parking lamps, side marker lamps, instrument lamps, and the dome lamp. All exterior lamps are off when the switch knob is pushed in all the way. When the switch knob is pulled out to the first detent, the parking, side marker, instrument cluster, and taillamps are turned on. When the switch knob is pulled out to the second detent, the headlamps are activated. Turning the switch knob clockwise or counterclockwise changes the intensity of the instrument panel lamps. Turning the switch knob to the full counterclockwise position turns on the dome lamp.

DIAGNOSIS OF SPEEDOMETER SYSTEM

PROBLEM	POSSIBLE CAUSE	CORRECTION
Speedometer is Inaccurate	Incorrect digital ratio adapter.	Check for the correct digital ratio adapter.
Speedometer Does Not Operate Properly	1. Inoperative digital ratio adapter.	1. Disconnect the digital ratio adapter, and place the ignition in run. Check for voltage between the brown wire in the harness and a good chassis ground. If the voltage is less than the battery voltage, check for an open or short in the brown wire.
	2. Poor ground path from the digital ratio adapter.	2. Check for voltage between the pink/black wire in the harness and the black/white wire. If the voltage is less than battery voltage, check for an open or short in the black/white wire.
	3. No signal from the vehicle speed sensor.	3. Raise and support the vehicle, start the engine, and place the transmission in drive. Check for AC voltage that changes with the engine RPM between the purple/white wire, and the light green/black wire at the digital ratio adapter. If there is not AC voltage at these wires, check for opens in the purple/white wire and the light green wire. If there are not shorts or opens, replace the vehicle speed sensor.
	4. Inoperative digital ratio adapter (speedometer output).	4. Raise and support the vehicle, start the engine, and place the transmission in drive. Check for AC voltage that changes with the engine RPM between light green/black wire and the white wire at the DRAC connector. If no voltage change, replace the digital ratio adapter.
	5. Inoperative digital ratio adapter (cruise output).	5. Raise and support the vehicle, start the engine, and place the transmission in drive. Check for AC voltage that changes with the engine RPM between the yellow and the black/white wires at the digital ratio adapter connector (connector attached) if AC voltage changes with RPM, replace the digital ratio adapter.

GMTB-3174-2A

DIAGNOSIS OF THE FUEL GAGE

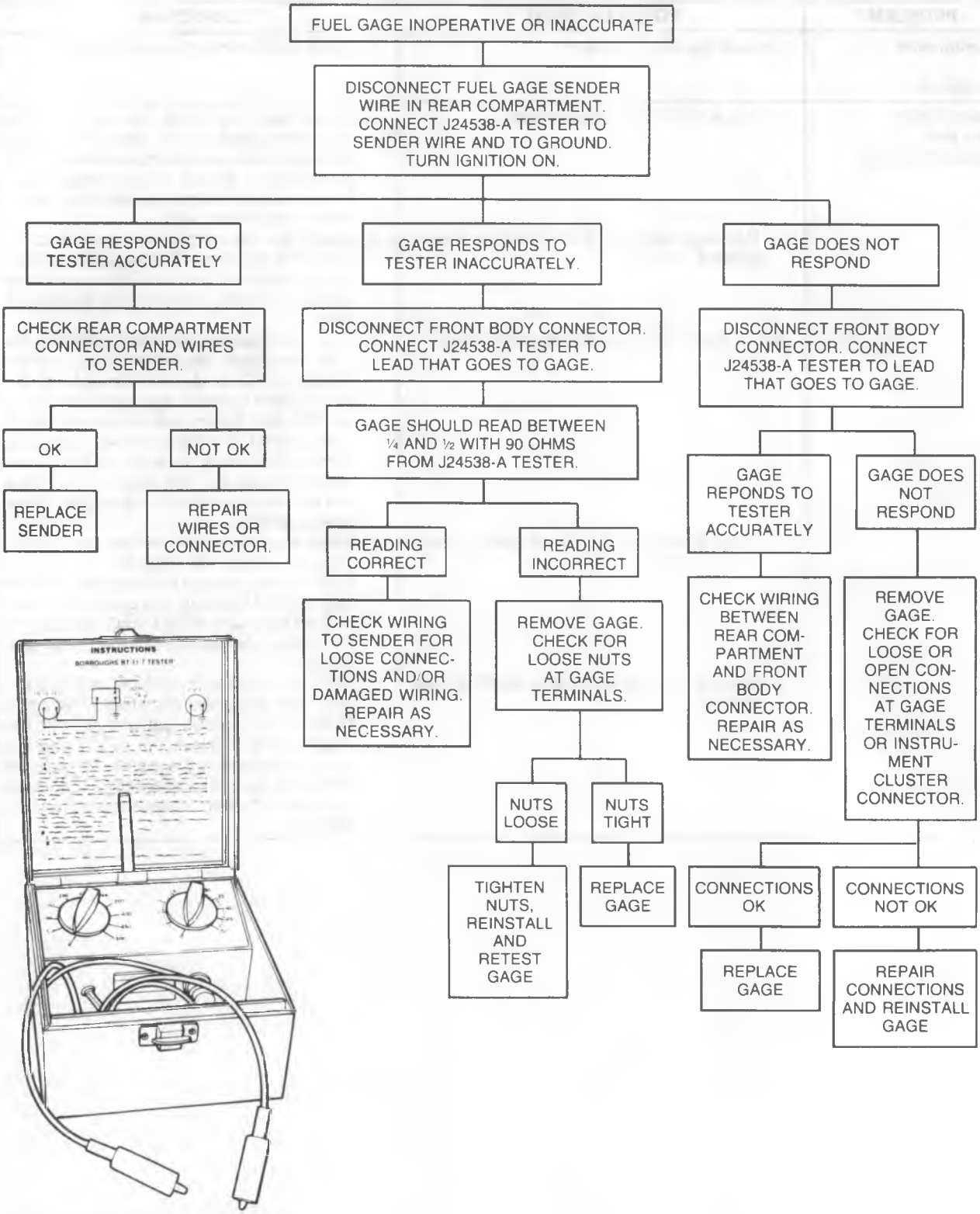

Figure 1—Diagnosis of the Fuel Gage

DIAGNOSIS OF THE OIL PRESSURE GAGE

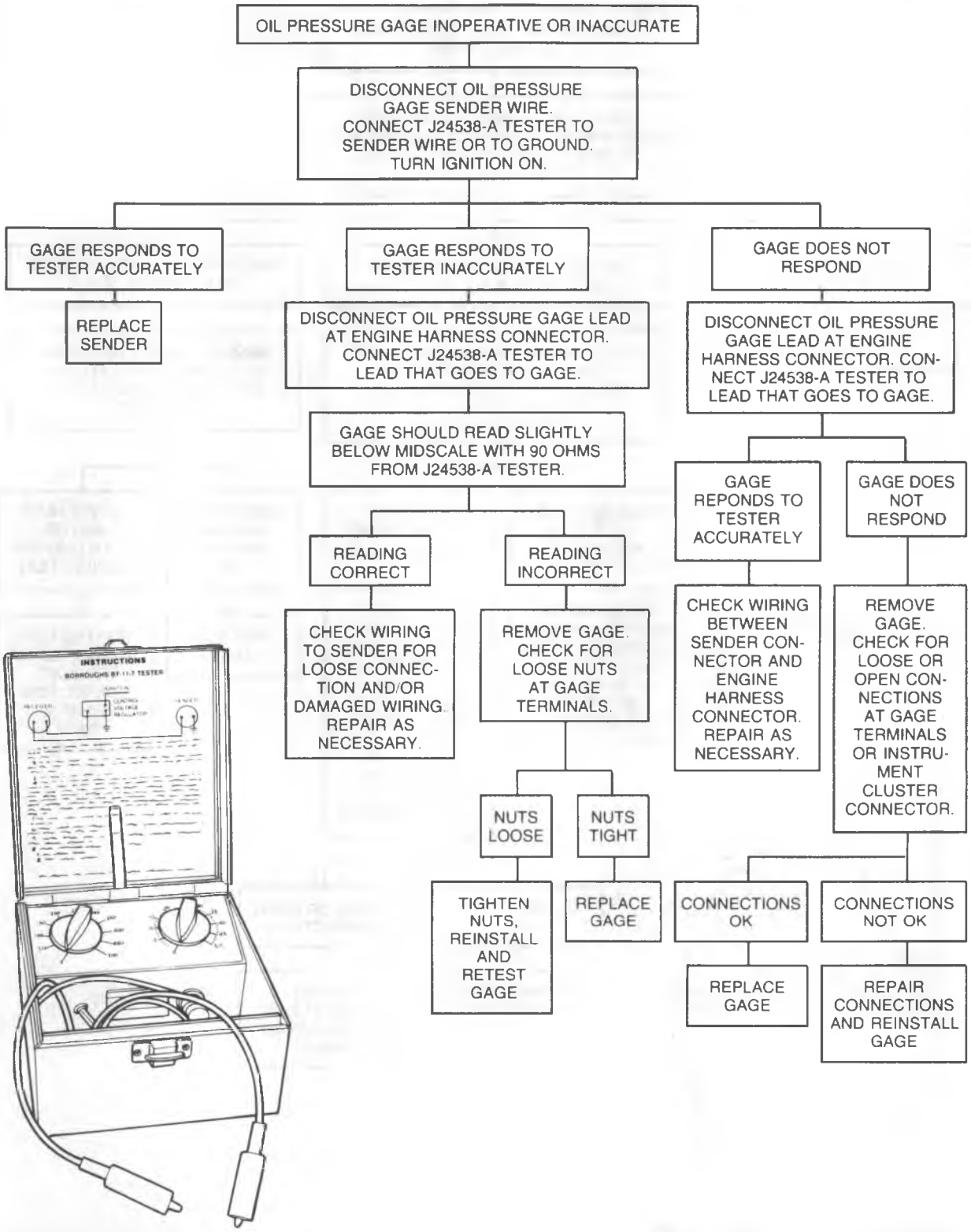

Figure 2—Diagnosis of the Oil Pressure Gage

DIAGNOSIS OF THE TEMPERATURE GAGE

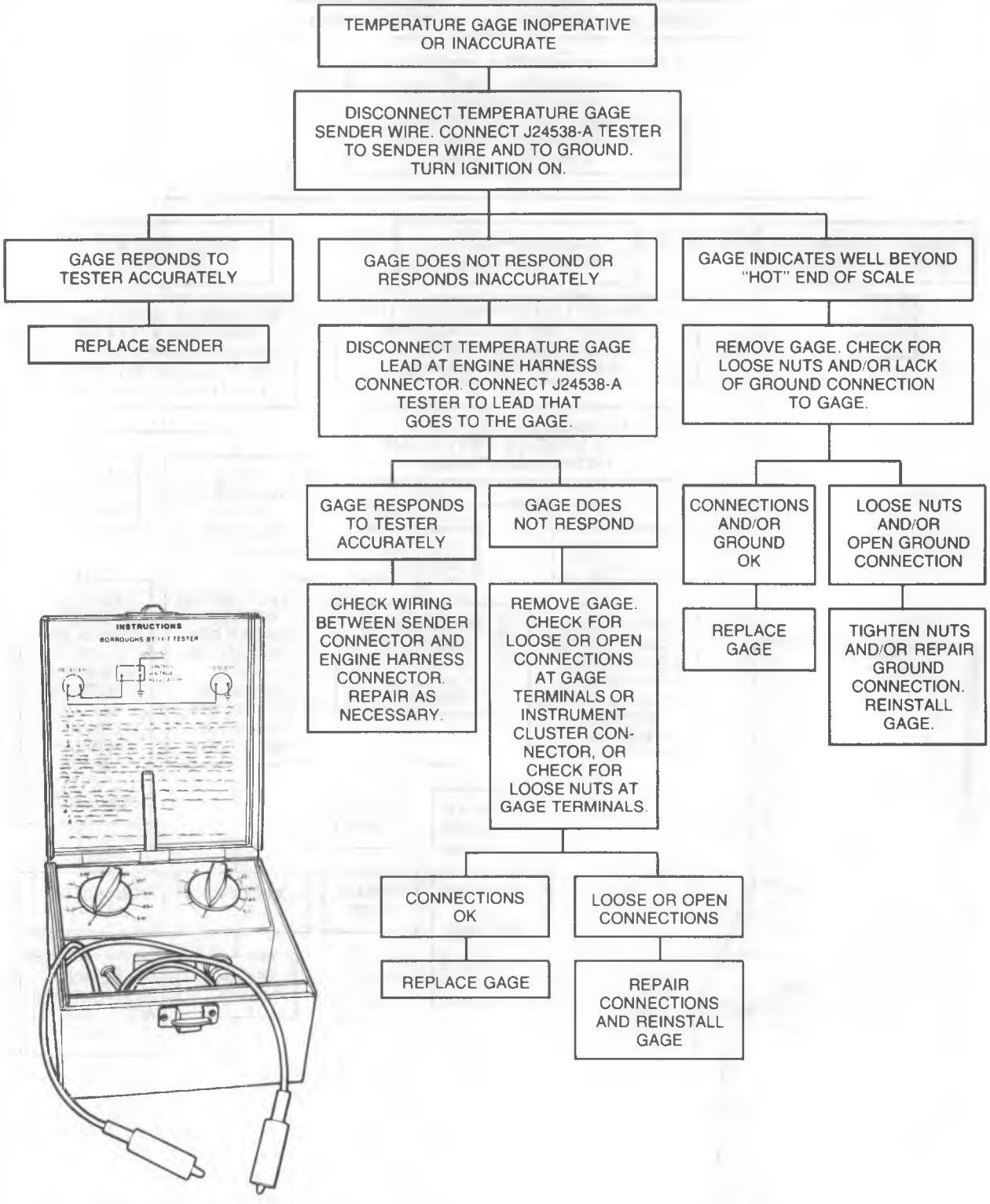

Figure 3—Diagnosis of the Temperature Gage

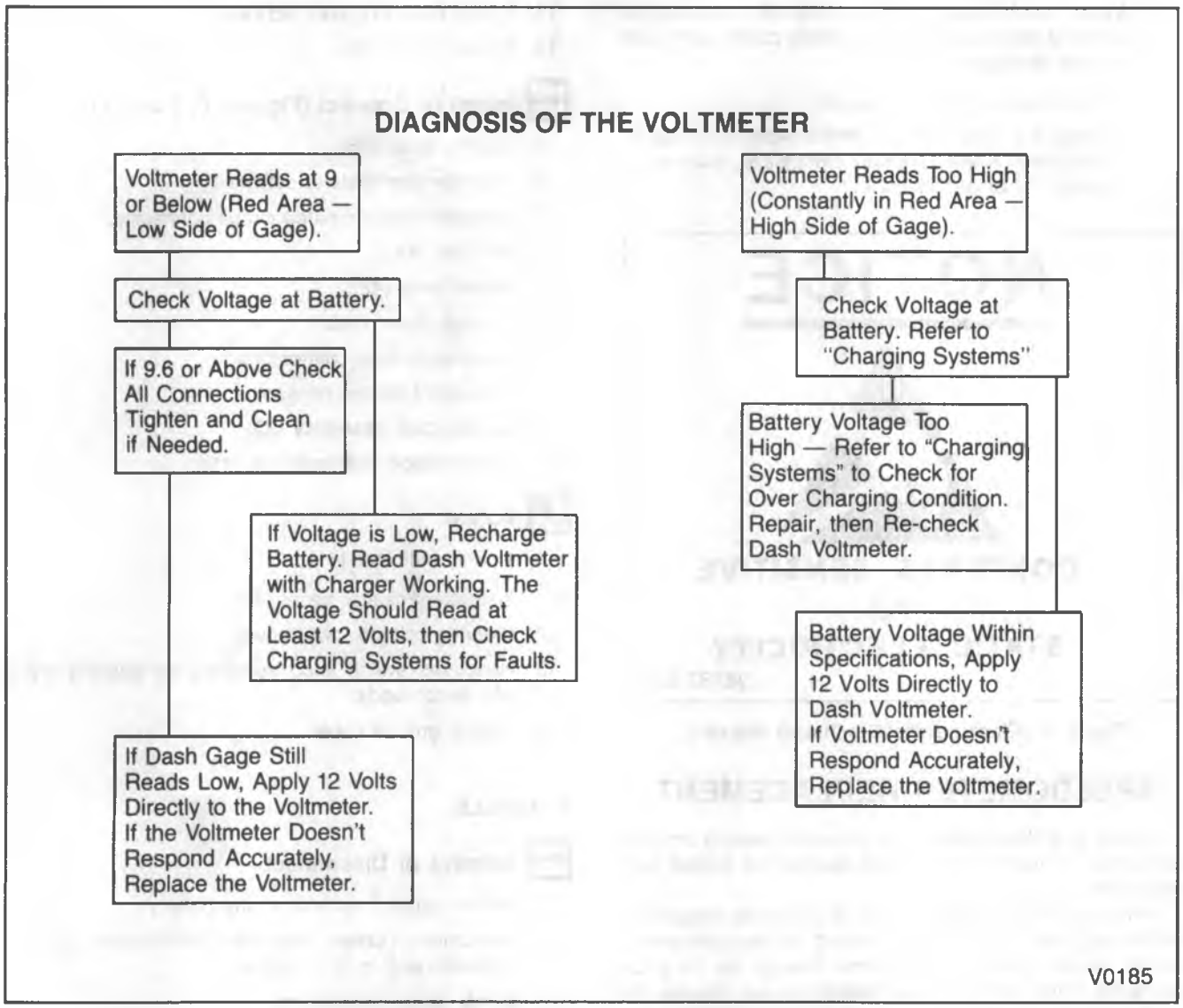

Figure 4—Diagnosis of the Voltmeter

ON-VEHICLE SERVICE

HANDLING ELECTROSTATIC DISCHARGE (ESD) SENSITIVE PARTS

Figure 5

Many solid state electrical components can be damaged by Electrostatic Discharge (ESD). Some will display a label as shown in Figure 1 but many will not.

NOTICE: In order to avoid possibly damaging any components, observe the following:

1. Body movement produces an electrostatic charge. To discharge personal static electricity, touch a ground point (metal) on the vehicle. This should be done any time you:
   - Slide across the vehicle seat.
   - Sit down or get up.
   - Do any walking.
2. Do not touch exposed electric terminals on components or connectors with your finger or any tools. Remember, the connector you are checking might be tied into a circuit that could be damaged by Electrostatic Discharge.
3. When using a screwdriver or similar tool to disconnect a connector, never let the tool come in contact with or come between the exposed terminals.
4. Never jumper, ground, or use test equipment probes on any components or connectors unless specified in diagnosis. When using test equipment, always connnect the ground lead first.
5. Do not remove the solid state component from its protective packaging until you are ready to install the part.

6. Always touch the solid state component's package to a ground before opening. Solid state components can also be damaged if:
   - They are bumped or dropped.
   - They are layed on any metal work benches or components that operate electrically, such as a radio, TV or oscilloscope.

Figure 5—Electrostatic Discharge Warning

SPEEDOMETER REPLACEMENT

Servicing of the speedometer assembly should only be performed by trained technicians having the proper test equipment.

When replacing a speedometer or odometer assembly, the law requires the odometer reading of the replacement unit to be set to register the same mileage as the prior odometer. If the same mileage cannot be set, the law requires the replacement odometer be set to zero and a label be installed on the driver's door frame to show the previous odometer reading and the date of replacement.

R/V MODELS

Remove or Disconnect (Figures 6, 7 and 8)

1. Battery ground cable.
2. Headlamp switch knob assembly.
   - Push in retainer pin on the switch body.
   - Pull out the knob assembly from switch body.
3. Steering column lower cover.
4. Instrument cluster bezel (43).
5. Transmission shift indicator (41).
6. Cluster case assembly (33).
7. Instrument cluster connector.
8. Illumination bulb connectors.
9. Trip odometer reset knob.
10. Cluster lens (42).
11. Retainer (44).
12. Speedometer laminated circuit connector.
13. Speedometer retainer screws.
14. Speedometer (36).

Install or Connect (Figures 6, 7 and 8)

1. Speedometer (36).
2. Speedometer retainer screws.
3. Speedometer laminated circuit connector.
4. Retainer (44).
5. Cluster lens (42).
6. Trip odometer knob.
7. Illumination bulb connectors.
8. Instrument cluster connector.
9. Cluster case assembly (33).
10. Transmission shift indicator (41).

Adjust

- Shift indicator (41).

11. Instrument cluster bezel (43).
12. Steering column lower cover.
13. Headlamp switch knob assembly by pushing knob into switch body.
14. Battery ground cable.

P MODELS

Remove or Disconnect

1. Battery ground cable from the battery.
2. Instrument cluster. Refer to "Instrument Cluster Replacement" in this section.
3. Lamp socket assemblies.
4. Laminated circuit retaining nuts.
5. Laminated circuit.
6. Cluster case retaining screws.
7. Cluster case from the bezel.
8. Speedometer retaining bolts.
9. Speedometer from the cluster case.

Install or Connect

1. Speedometer to the cluster case.
2. Speedometer retaining bolts.
3. Cluster case to the bezel.
4. Cluster case retaining screws.
5. Laminated circuit.
6. Laminated circuit retaining nuts.
7. Lamp socket assemblies.
8. Instrument cluster. Refer to "Instrument Cluster Replacement" in this section.
9. Battery ground cable to the battery.

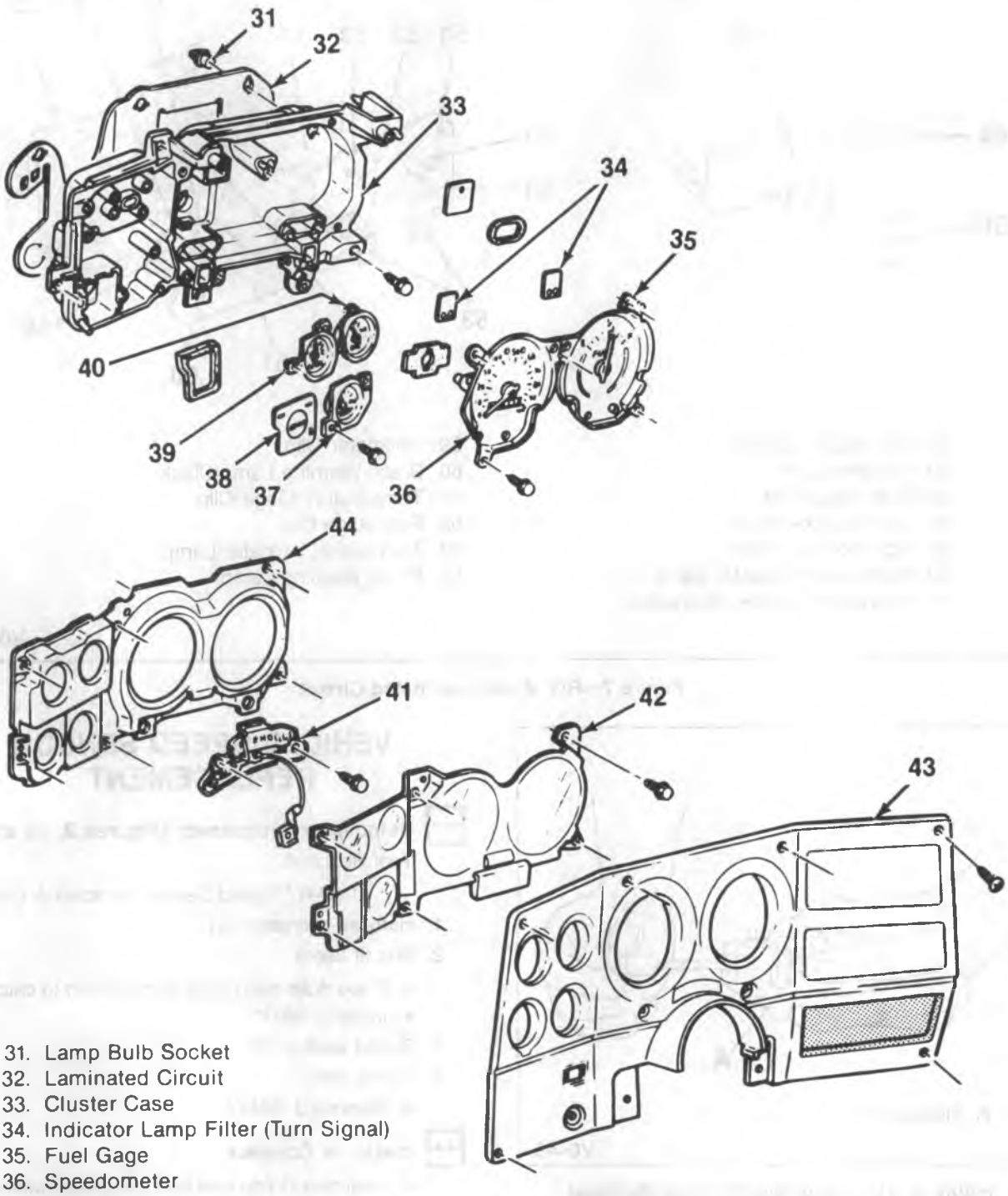

31. Lamp Bulb Socket
32. Laminated Circuit
33. Cluster Case
34. Indicator Lamp Filter (Turn Signal)
35. Fuel Gage
36. Speedometer
37. Temperature Gage
38. Brake Warning Lamp Filter
39. Voltmeter
40. Oil Pressure Gage
41. Transmission Shift Indicator
42. Instrument Cluster Lens
43. Instrument Cluster Bezel
44. Retainer

V0181

Figure 6—R/V Model Instrument Panel

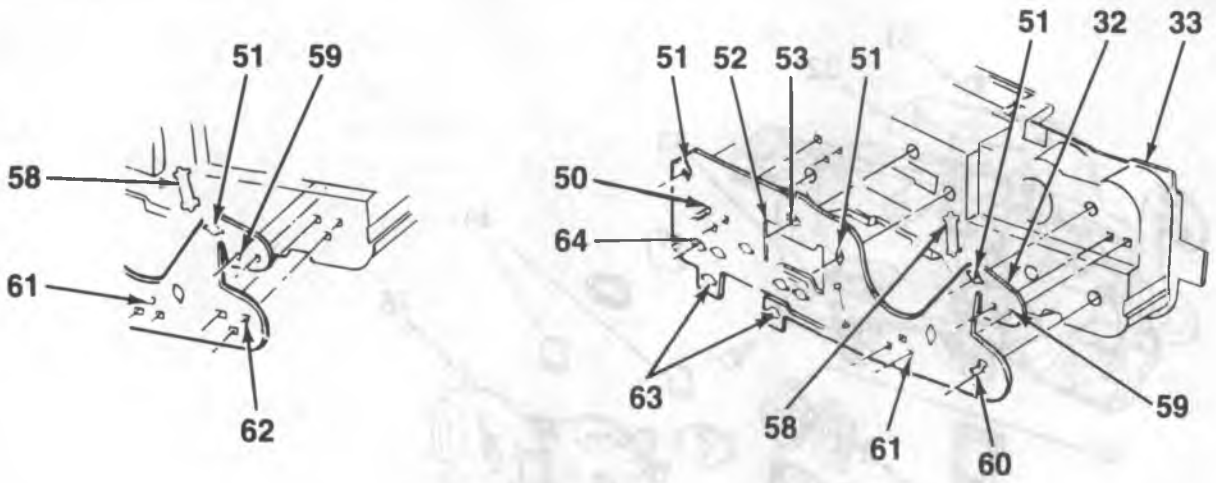

32. Laminated Circuit
33. Cluster Case
50. Fuel Gage Clip
51. Lamp Socket Hole
52. Speedometer Hole
53. High Beam Indicator Lamp
58. Instrument Cluster Connector
59. Voltmeter Clip
60. Brake Warning Lamp/Clock
61. Temperature Gage Clip
62. Fuel Gage Clip
63. Turn Signal Indicator Lamp
64. Brake Warning Lamp

V0182

Figure 7—R/V Model Laminated Circuit

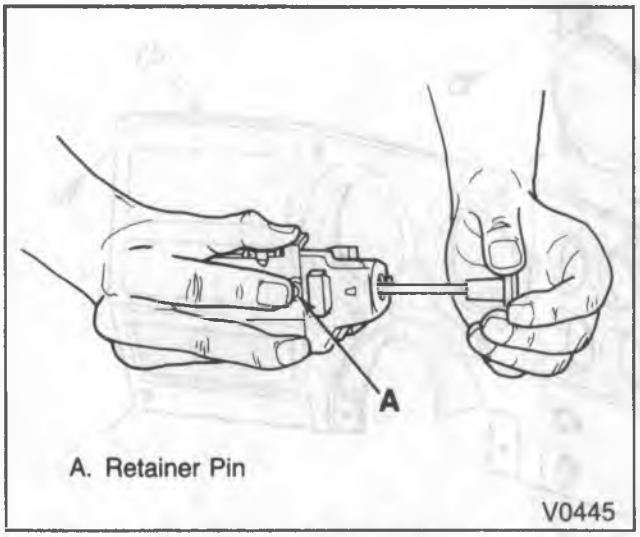

Figure 8—Headlamp Switch Knob Removal

VEHICLE SPEED SENSOR REPLACEMENT

Remove or Disconnect (Figures 9, 10 and 11)

Tool Required:

J 38417 Speed Sensor Remover & Installer

1. Harness connector (2).
2. Bolt (if used).
   - Place drain pan under transmission to catch fluid.
   - Install J 38417
3. Speed sensor (1).
4. O-ring seal.
   - Remove J 38417.

Install or Connect

- Coat new O-ring seal with thin film of transmission fluid.

1. Vehicle speed sensor (1) using J 38417
   - Remove J 38417
2. Bolt (if used).
3. Harness connector (2).

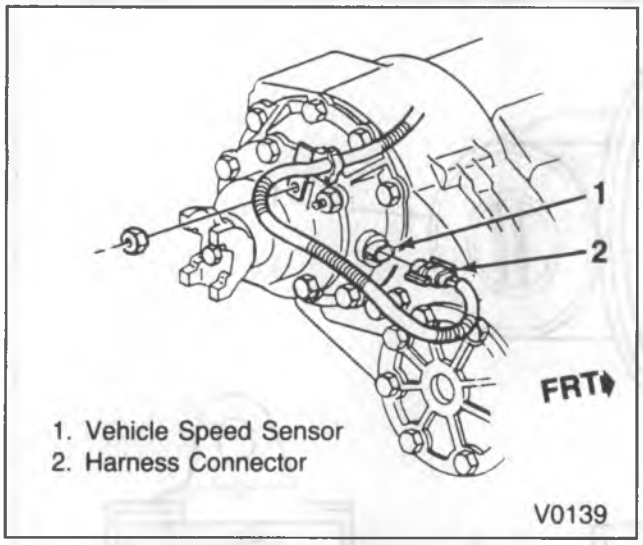

Figure 9 – Vehicle Speed Sensor Location Four Wheel Drive

DIGITAL RATIO ADAPTOR CONTROLLER (DRAC OR BUFFER) REPLACEMENT

NOTICE: Before replacing the DRAC module, the technician must be properly grounded to prevent static shock. A grounding strap should be worn by the technician by placing the cuff around the wrist, then attaching the ground wire clip to a known good chassis ground.

R/V-MODELS

Remove or Disconnect (Figure 12)

1. Harness connector (6).
2. DRAC (4) from bracket (7).

Install or Connect (Figure 12)

1. DRAC (4) onto bracket (7).
2. Harness connector (6).

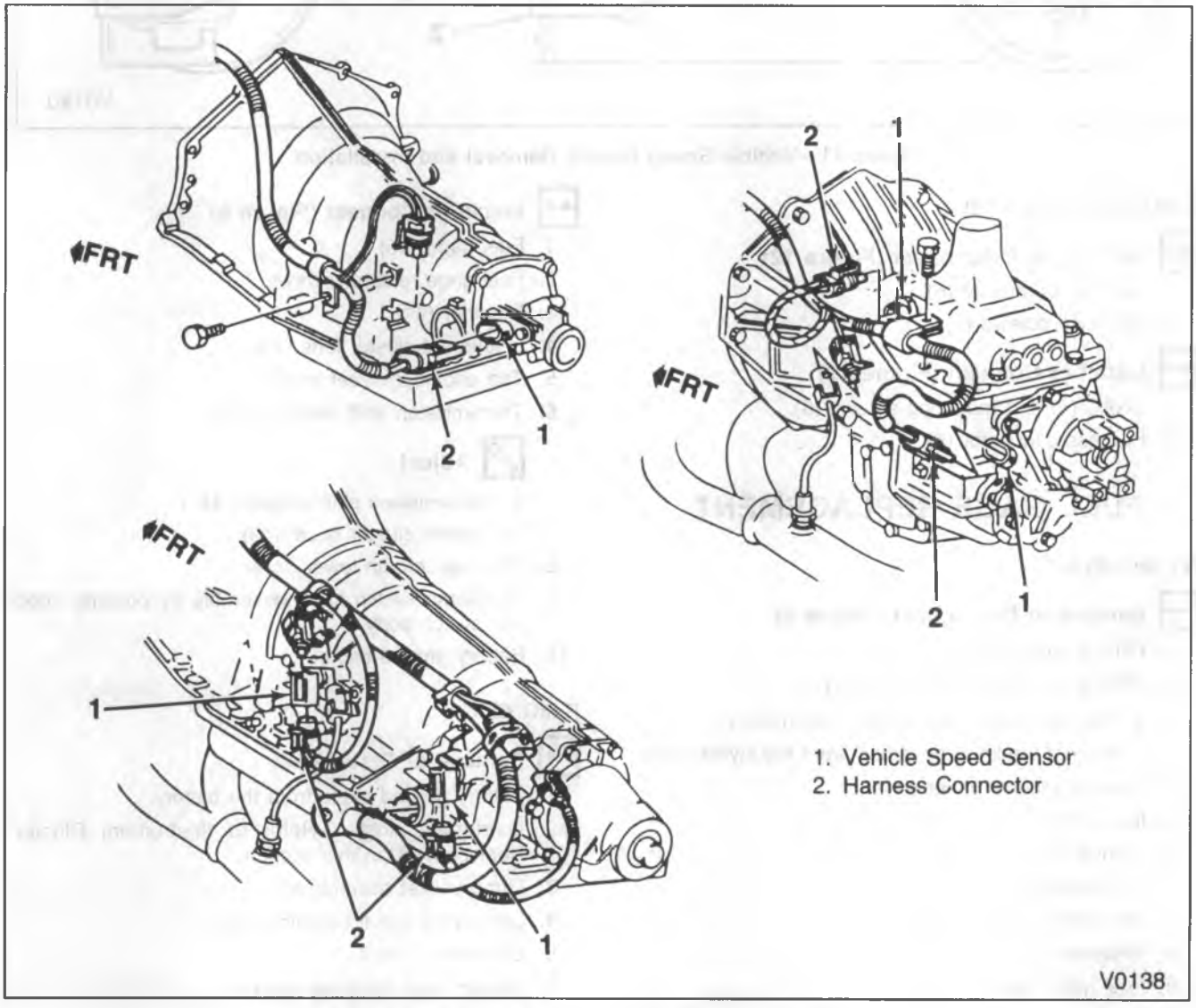

Figure 10 – Vehicle Speed Sensor Location Two Wheel Drive

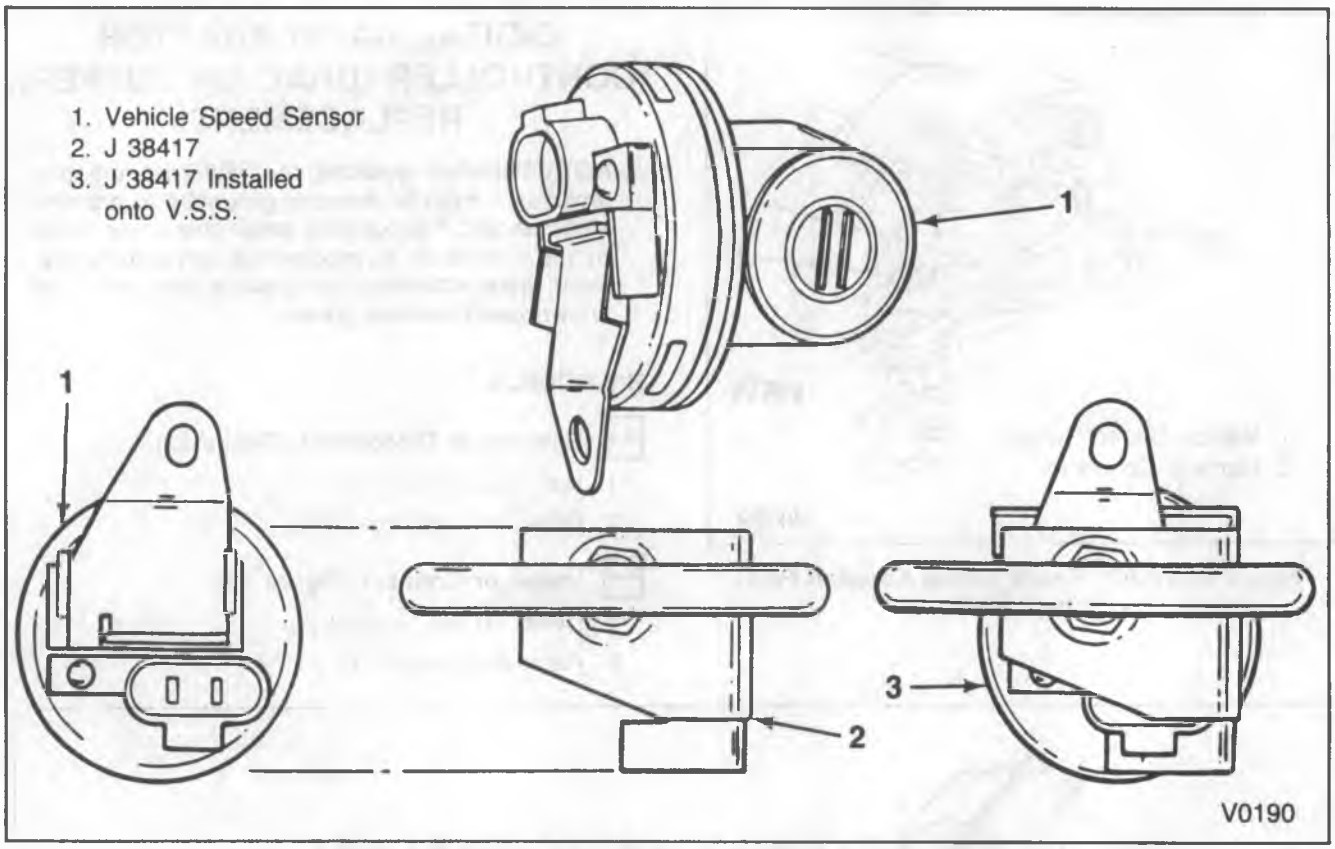

Figure 11—Vehicle Speed Sensor Removal and Installation

P MODELS (Figure 12)

Remove or Disconnect (Figure 12)

1. Harness connector (6).
2. Mounting screws (5).

Install or Connect (Figure 12)

1. DRAC (4) and mounting screws (5).
2. Harness connector (6).

FUEL GAGE REPLACEMENT

R/V MODELS

Remove or Disconnect (Figure 6)

1. Battery ground cable.
2. Headlamp switch knob assembly.
   - Push in retainer pin on the switch body.
   - Pull out the knob assembly from the switch body.
3. Steering column lower cover.
4. Instrument cluster bezel (43).
5. Transmission shift indicator (41).
6. Trip odometer reset knob.
7. Instrument cluster lease (42).
8. Retainer (44).
9. Fuel gage retainer screws.
10. Fuel gage (35).

Install or Connect (Figure 6)

1. Fuel gage (35).
2. Fuel gage retainer screws.
3. Retainer (44).
4. Instrument cluster lens (42).
5. Trip odometer reset knob.
6. Transmission shift indicator (41).

Adjust

- Transmission shift indicator (41).

7. Instrument cluster bezel (43).
8. Steering column lower cover.
9. Headlamp switch knob assembly by pushing knob into switch body.
10. Battery ground cable.

P MODELS

Remove or Disconnect

1. Battery ground cable from the battery.
2. Instrument cluster. Refer to "Instrument Cluster Replacement" in this section.
3. Lamp socket assemblies.
4. Laminated circuit retaining nuts.
5. Laminated circuit.
6. Cluster case retaining screws.
7. Cluster case from the bezel.

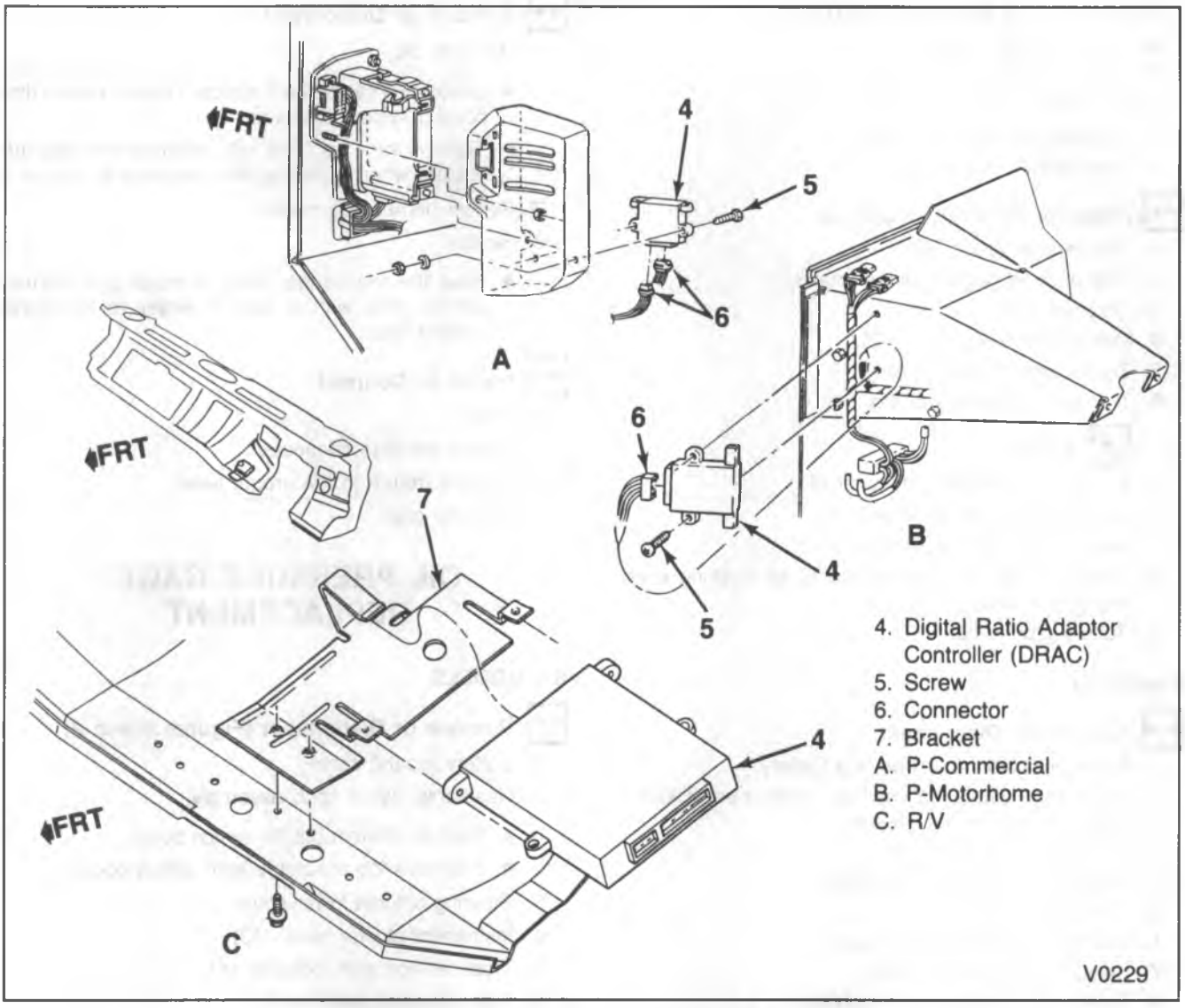

Figure 12—Digital Ratio Adaptor Controller (DRAC) Location

8. Fuel gage retaining bolts.
9. Fuel gage from the cluster case.

Install or Connect

1. Fuel gage to the cluster case.
2. Fuel gage retaining bolts.
3. Cluster case to the bezel.
4. Cluster case retaining screws.
5. Laminated circuit.
6. Laminated circuit retaining nuts.
7. Lamp socket assemblies.
8. Instrument cluster. Refer to "Instrument Cluster Replacement" in this section.
9. Battery ground cable from the battery.

FUEL SENDER UNIT REPLACEMENT

Refer to FUEL SYSTEM (SEC. 6C) or the FUEL AND EMISSIONS Manual if using X-9132 or to the rear of this manual if using ST-330-91.

TEMPERATURE GAGE REPLACEMENT

The temperature sensor is located:

- LB4 engines — above the exhaust manifold near the center of the left head.
- L05 engines — in the left head above #1 spark plug.
- L19 engines — in the left head above #3 spark plug.
- LL4/LH6 engines — near the front of the left head before the exhaust manifold.

R/V MODELS

Remove or Disconnect (Figures 6 and 8)

1. Battery ground cable.
2. Headlamp switch knob assembly.
   - Push in retainer pin on switch body.
   - Pull out knob assembly from switch body.
3. Steering column lower cover.
4. Instrument cluster bezel (43).

5. Transmission shift indicator (41).
6. Trip odometer reset knob.
7. Instrument cluster lens (42).
8. Retainer (44).
9. Temperature retainer screws.
10. Temperature gage (37).

Install or Connect (Figure 6)

1. Temperature gage (37).
2. Temperature gage retainer screws.
3. Retainer (44).
4. Instrument cluster lens (42).
5. Trip odometer reset knob.
6. Transmission shift indicator (41).

Adjust

- Transmission shift indicator (41).

7. Instrument cluster bezel (43).
8. Steering column lower cover.
9. Headlamp switch knob assembly, by pushing knob into switch body.
10. Battery ground cable.

P MODELS

Remove or Disconnect

1. Battery ground cable from the battery.
2. Instrument cluster. Refer to "Instrument Cluster Replacement" in this section.
3. Lamp socket assemblies.
4. Laminated circuit retaining nuts.
5. Laminated circuit.
6. Cluster case retaining screws.
7. Cluster case from the bezel.
8. Temperature gage retaining bolts.
9. Temperature gage from the cluster case.

Install or Connect

1. Temperature gage to the cluster case.
2. Temperature gage retaining bolts.
3. Cluster case to the bezel.
4. Cluster case retaining screws.
5. Laminated circuit.
6. Laminated circuit retaining nuts.
7. Lamp socket assemblies.
8. Instrument cluster. Refer to "Instrument Cluster Replacement" in this section.
9. Battery ground cable from the battery.

TEMPERATURE GAGE SENSOR REPLACEMENT

ALL MODELS

CAUTION: The radiator cap should be removed from a cool engine only. If the cap is removed from a hat cooling system, serious personal injury may result.

Remove or Disconnect

1. Radiator cap.
   - Loosen the cap to the first stop. This will relieve the cooling system pressure.
   - Tighten the cap. This will minimize the loss of coolant when replacing the temperature sender.
2. Sensor harness connector.
3. Sensor.
   - Have the new sender ready to install or close the sender hole with a cork in order to minimize coolant loss.

Install or Connect

1. Sensor.
2. Sensor harness connector.
3. Coolant (return to the proper level).
4. Radiator cap.

OIL PRESSURE GAGE REPLACEMENT

R/V MODELS

Remove or Disconnect (Figures 6 and 8)

1. Battery ground cable.
2. Headlamp switch knob assembly.
   - Push in retainer pin on switch body.
   - Pull out knob assembly from switch body.
3. Steering column lower cover.
4. Instrument cluster bezel (43).
5. Transmission shift indicator (41).
6. Trip odometer reset knob.
7. Instrument cluster lens (42).
8. Retainer (44).
9. Oil pressure gage retainer screws.
10. Oil pressure gage (40).

Install or Connect (Figure 6)

1. Oil pressure gage (40).
2. Oil pressure gage retainer screws.
3. Retainer (44).
4. Instrument cluster lens (42).
5. Trip odometer reset knob.
6. Transmission shift indicator (41).

Adjust

- Transmission shift indicator (41).

7. Instrument cluster bezel (43).
8. Steering column lower cover.
9. Headlamp switch knob assembly, by pushing knob into switch body.
10. Battery ground cable.

P MODELS

Remove or Disconnect

1. Battery ground cable from the battery.
2. Instrument cluster. Refer to "Instrument Cluster Replacement" in this section.
3. Lamp socket assemblies.
4. Laminated circuit retaining nuts.
5. Laminated circuit.
6. Cluster case retaining screws.
7. Cluster case from the bezel.
8. Oil pressure gage retaining bolts.
9. Oil pressure gage from the cluster case.

Install or Connect

1. Oil pressure gage to the cluster case.
2. Oil pressure gage retaining bolts.
3. Cluster case to the bezel.
4. Cluster case retaining screws.
5. Laminated circuit.
6. Laminated circuit retaining nuts.
7. Lamp socket assemblies.
8. Instrument cluster. Refer to "Instrument Cluster Replacement" in this section.
9. Battery ground cable from the battery.

OIL PRESSURE GAGE SENSOR REPLACEMENT

ALL MODELS

Remove or Disconnect (Figure 13)

1. Battery ground cable from the battery.
2. Wiring harness connector from the sensor.
   - 5.7L and 4.3L engines—the sensor is located at the left front side of the distributor.
   - V-8 (7.4L) engines—the sensor is located at the front left side of the block.
   - Diesel engines—left side, above the flywheel housing.
3. Sensor (Figure 12).
   - Use J 35749.

Install or Connect (Figure 13)

1. Sensor.
   - Use J 35749.
2. Wiring harness connector to the sender.
3. Battery ground cable to the battery.

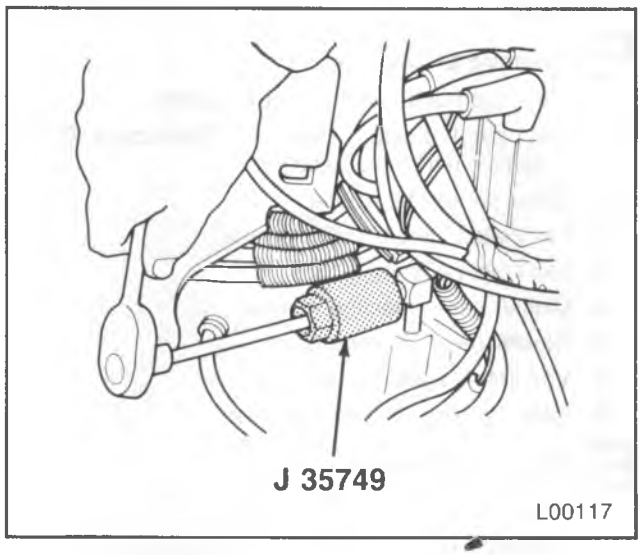

Figure 13—Oil Pressure Gage Sensor Replacement

VOLTMETER REPLACEMENT

R/V MODELS

Remove or Disconnect (Figures 6 and 8)

1. Battery ground cable.
2. Headlamp switch knob assembly.
   - Push in retainer pin on switch body.
   - Pull out knob assembly from the switch body.
3. Steering column lower cover.
4. Instrument cluster bezel (43).
5. Transmission shift indicator (41).
6. Trip odometer reset knob.
7. Instrument cluster lens (42).
8. Retainer (44).
9. Voltmeter retainer screws.
10. Voltmeter (39).

Install or Connect (Figure 6)

1. Voltmeter (39).
2. Voltmeter retainer screws.
3. Retainer (44).
4. Instrument cluster lens (42).
5. Trip odometer reset knob.
6. Transmission shift indicator (41).

   Adjust

   - Transmission shift indicator (41).
7. Instrument cluster bezel (43).
8. Steering column lower cover.
9. Headlamp switch knob assembly, by pushing knob into switch body.
10. Battery ground cable.

P MODELS

Remove or Disconnect

1. Battery ground cable from the battery.
2. Instrument cluster. Refer to "Instrument Cluster Replacement" in this section.
3. Lamp socket assemblies.
4. Laminated circuit retaining nuts.
5. Laminated circuit.
6. Cluster case retaining screws.
7. Cluster case from the bezel.
8. Voltmeter retaining bolts.
9. Voltmeter from the cluster case.

Install or Connect

1. Voltmeter to the cluster case.
2. Voltmeter retaining bolts.
3. Cluster case to the bezel.
4. Cluster case retaining screws.
5. Laminated circuit.
6. Laminated circuit retaining nuts.
7. Lamp socket assemblies.
8. Instrument cluster. Refer to "Instrument Cluster Replacement" in this section.
9. Battery ground cable from the battery.

INSTRUMENT CLUSTER REPLACEMENT

R/V MODELS

Remove or Disconnect (Figures 6 and 8)

1. Battery ground cable from the battery.
2. Headlamp switch knob assembly.
   - Push in retainer pin on switch body.
   - Pull out knob assembly from switch body.
3. Four steering column cover retaining screws.
4. Steering column cover.
5. Eight instrument bezel retaining screws.
6. Instrument bezel (43).
7. Four cluster retaining screws.
8. Cluster harness connector.
9. Cluster.

Install or Connect (Figure 6)

1. Cluster.
2. Cluster harness connector.
3. Four cluster retaining screws.
4. Instrument bezel (43).
5. Eight instrument bezel retaining screws.
6. Steering column cover.
7. Four steering column cover retaining screws.
8. Headlamp switch knob assembly by pushing knob into switch body.
9. Battery ground cable to the battery.

P MODELS

Remove or Disconnect

1. Battery ground cable from the battery.
2. Instrument cluster harness connector.
3. Instrument cluster bezel screws.
4. Instrument cluster from the dash panel.

Install or Connect

1. Instrument cluster to the dash panel.
2. Instrument cluster bezel screws.
3. Instrument cluster harness connector.
4. Battery ground cable from the battery.

INSTRUMENT CLUSTER BULB REPLACEMENT

Remove or Disconnect (Figures 6, 7 and 8)

1. Instrument cluster. Refer to "Instrument Cluster Replacement" in this section.
2. Bulb from retainers by grasping back of bulb and turning it about 1/4 turn to the left.

Install or Connect (Figures 6 and 7)

1. Bulb into retainer. Lock bulb into place by turning bulb about 1/4 turn to the right.
2. Instrument cluster. Refer to "Instrument Cluster Replacement" in this section.

LAMINATED (PRINTED) CIRCUIT REPLACEMENT

ALL MODELS

Remove or Disconnect (Figures 6, 7 and 8)

1. Instrument cluster assembly. Refer to "Instrument Cluster Replacement" in this section.
2. Instrument cluster lamp bulb assemblies.
3. Laminated circuit retaining screws.
4. P models.
   - Fuel gage terminal nuts.
   - Temperature gage terminal nuts.
   - Voltmeter terminal nuts.

Install or Connect (Figures 6 & 7)

1. Laminated circuit (32) to the cluster case (33).
2. Laminated circuit retaining screws.
3. P models.
   - Fuel gage terminal nuts.
   - Temperature gage terminal nuts.
   - Voltmeter terminal nuts.
4. Instrument cluster lamp bulb assemblies.
5. Instrument cluster assembly. Refer to "Instrument Cluster Replacement" in this section.

IGNITION SWITCH REPLACEMENT

Refer to STEERING COLUMN-STANDARD (SEC. 3F1) or STEERING COLUMN-TILT (SEC. 3F2)

LAMP SWITCH REPLACEMENT

Refer to LIGHTING SYSTEMS (SEC. 8B).

SPECIAL TOOLS

1. 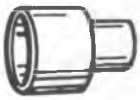 J 35749

3.

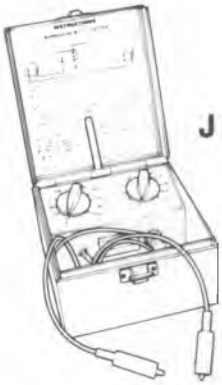

2. J 24538-B

1. Oil Pressure Sending Unit Socket Wrench
2. Gage Tester
3. Vehicle Speed Sensor Remover/Installer

V0191

SECTION 8D

CHASSIS ELECTRICAL

NOTICE: When fasteners are removed, always reinstall them at the same location from which they were removed. If a fastener needs to be replaced, use the correct part number fastener for that application. If the correct part number fastener is not available, a fastener of equal size and strength (or stronger) may be used. Fasteners that are not reused, and those requiring thread locking compound will be called out. The correct torque value must be used when installing fasteners that require it. If the above conditions are not followed, parts or system damage could result.

CONTENTS

SUBJECT	PAGE
Description	8D- 1
Horn Systems	8D- 1
Windshield Wiper and Washer (R/V and P-Commercial Models)	8D- 1
Windshield Wiper and Washer (P-Motorhome Models)	8D- 2
Windshield Wiper Delay Circuit	8D- 3
Windshield Wiper Linkage, Transmission, Arms and Blades	8D- 3
Diagnosis	8D- 6
Horn System	8D- 6
Windshield Wiper (R/V and P-Commercial Models)	8D- 7
Windshield Wiper (P-Motorhome Models)	8D-11
Wiper (P-Motorhome Models)	8D-12
Windshield Washer (R/V and P-Commercial Models)	8D-13
Washer System (P-Motorhome Models)	8D-13
Wiper Delay Circuit	8D-14
On-Vehicle Service	8D-15
Horn Replacement	8D-15
Wiper Motor Replacement	8D-15
Washer Motor Replacement	8D-15
Wiper Delay Module Replacement	8D-17
Wiper Delay Switch Replacement	8D-17
Unit Repair	8D-17

DESCRIPTION

HORN SYSTEM

The horn circuit starts at the fuse block. From the fuse block, the circuit goes to the horn relay. At the horn relay the circuit splits, one branch going through the relay coil to the horn switch in the steering column, and the other branch going through the relay contacts to the horn.

When the horn switch is closed, it provides a ground path for the horn relay coil. Current flows in the coil, closing the relay contacts. Now current flows to the horn creating a loud sound.

The horn relay is located in the convenience center which is located under the instrument panel and on the left side of the steering column (figure 1).

WINDSHIELD WIPER AND WASHER (R/V AND P-COMMERCIAL MODELS)

A permanent magnet type wiper is used on R/V and P-Commercial Models. The motor parts-field magnets, armature, drive gear, etc., are enclosed in a two piece sheet metal housing. For purposes of explanation, the housing halves are referred to as upper and lower housings. The two housing are attached to each other by ten extrusions which are staked over.

The wiper motor is protected by an automatic reset type circuit breaker located on the motor brush holder assembly. A fuse located in the fuse block protects the vehicle wiring.

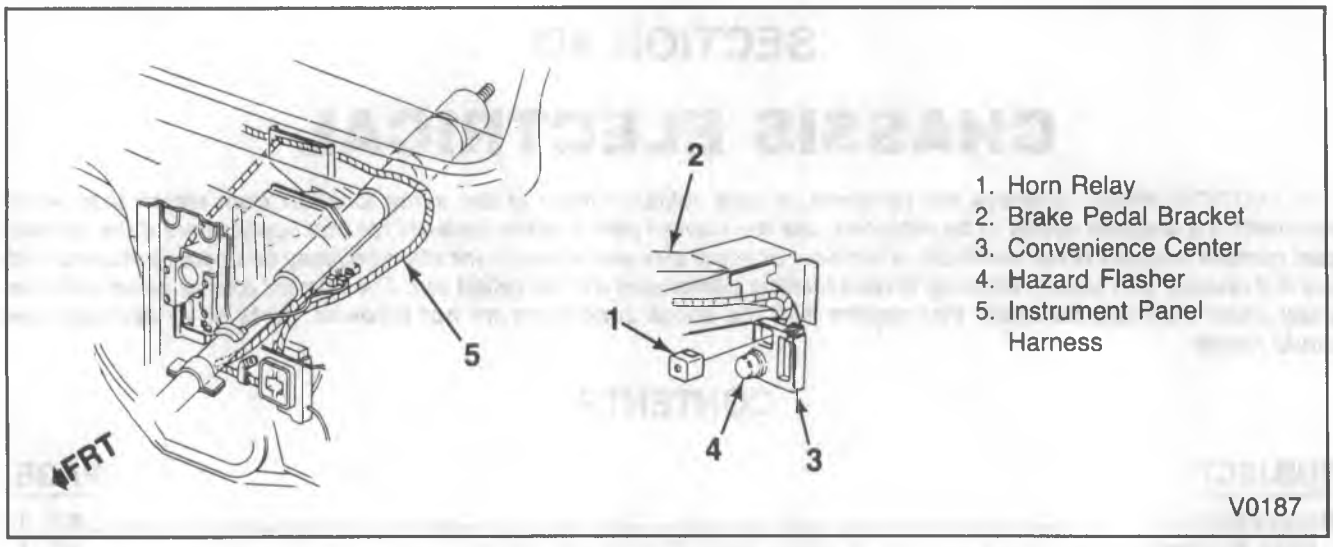

Figure 1—Horn Relay Location

The wiper motor can be operated only when the ignition switch is in the "run" or "accessory" position.

The wiper motor has three brushes; the "common," the low speed, and the high speed. When the ignition switch is "ON," power is applied to the common brush. The low speed and high speed brushes are connected to their respective ground via the control switch. When the control switch is positioned at "HI" or "LO" speed, a ground path is connected to the high or low speed brush in the motor. The motor runs at the switch selected speed.

In order to have the wiper blades stop in their normal park position and the wiper motor shut off properly, the motor must run in LO speed. When the control switch is moved to the OFF position, the low speed brush circuit goes through a park switch located in the gear housing and then to ground at the control switch. The park switch is normally closed and this allows the wiper to keep running. When the wiper blades reach their park position, cam on the gear opens the normally closed park switch, which turns off the wiper. Refer to Figures 2 and 3.

For wiper diagnosis, refer to figures 6 through 10 in "Diagnosis" later in this section.

The washer motor is located in the bottom of the windshield washer fluid reservoir. The washer is controlled by a washer switch, which is located on the turn signal and multifunction lever. Two wires go to the washer. The white wire is power coming from the fuse box. The same fuse that protects the washer motor also protects the wiper motor. The pink wire is the ground circuit that goes through the washer switch to ground.

For washer diagnosis, refer to the appropriate chart in "Diagnosis" later in this section.

WINDSHIELD WIPER AND WASHER (P-MOTORHOME MODELS)

The system consists of a compound wound rectangular-shaped motor attached to a gear box containing a parking switch in addition to the gear train. The gear train consists of a motor armature helical gearshaft which drives an intermediate gear and pinion assembly. The pinion gear of the intermediate gear and pinion drives an output gear and shaft assembly.

Turning the wiper switch to the LO speed position completes the circuits from the wiper terminals 1 and 3 to ground (figure 4). Current then flows from the battery via wiper terminal No. 2 through the series field and divides; (1) part of the current passes through the armature to ground via wiper terminal No. 1 to the wiper switch and (2) the second part passes through the shunt field to ground through wiper terminal No. 3 to the wiper switch. The wiper switch must be securely grounded to body metal.

Moving the wiper switch to the HI speed position opens the shunt field circuit to ground at the switch. However, the shunt field is connected to a 20 ohm resistor which is connected across wiper terminals 1 and 3. The shunt field current then flows via terminal No. 3 through the resistor to terminal No. 1, to the switch, to ground.

The parking circuit covers that portion of wiper operation when the wiper switch is turned "off" and the wiper blades have not reached the park position.

When the wiper blades are not in the normal park position, the parking switch contacts are still closed. The wiper will continue to operate until the wiper output gear is turned to a position where its cam opens the park switch. The wiper motor circuits are completed to ground through the parking switch.

The wiper motor must be securely grounded to body metal.

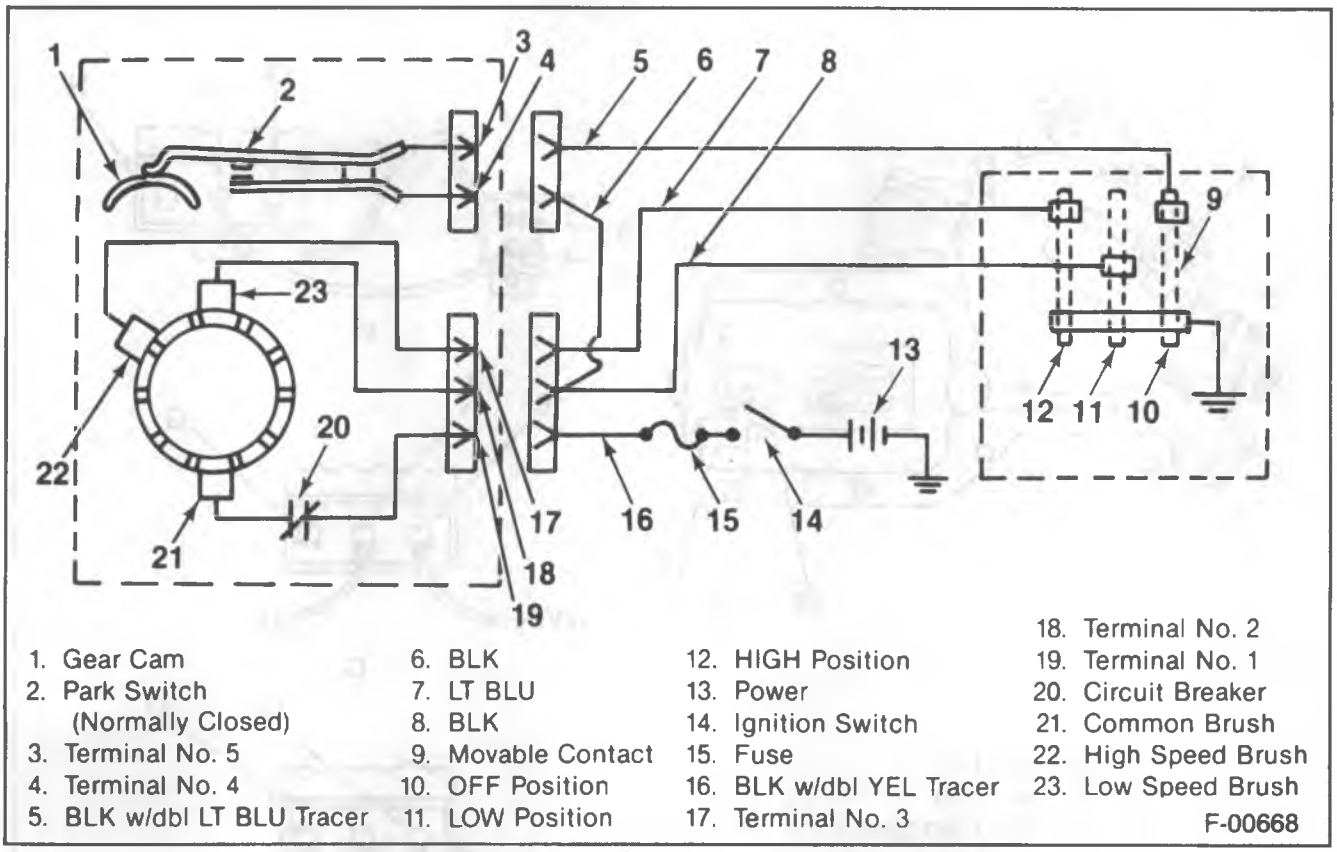

Figure 2—R/V & P-Commercial Windshield Wiper Diagram

The shunt field circuit is completed from terminal No. 3 via the switch to terminal No. 1 through the parking switch to ground. The series field and armature circuit is also completed from terminal No. 1, through the parking switch to ground.

The shunt field is connected direct to ground, by-passing the resistor. This results in LO speed operation during the parking operation.

When the output gear cam opens the park switch contacts, the wiper is "off."

For diagnosis, refer to figures 11, 12 and 13, and the appropriate chart, in "Diagnosis," later in this section.

For washer system diagnosis, refer to the appropriate chart in "Diagnosis," later in this section.

WINDSHIELD WIPER DELAY CIRCUIT

The wiper delay control circuit is an option on R/V and P models. This option allows the wiper to operate at a slower rate than the low speed setting on the standard control.

The delay module is inserted into the harness under the steering column (figure 5).

For delay circuit diagnosis, refer to figure 14.

WINDSHIELD WIPER LINKAGE, TRANSMISSION, ARMS AND BLADES

For servicing the linkage, transmission, arms or blades of the windshield wiper system, refer to WINDSHIELD WIPER — WASHER SYSTEM (SEC. 8E).

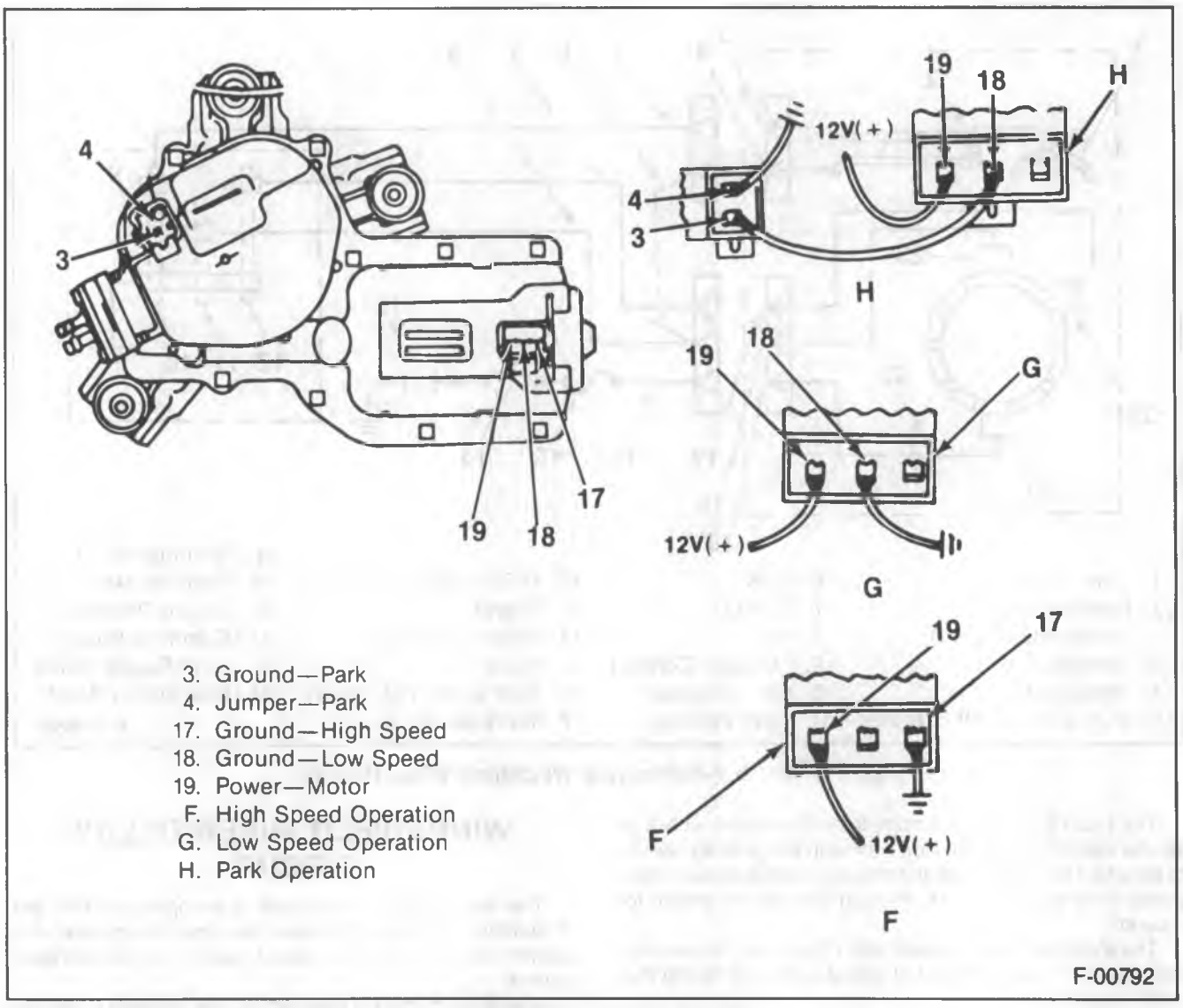

Figure 3—Diagnosis Connections

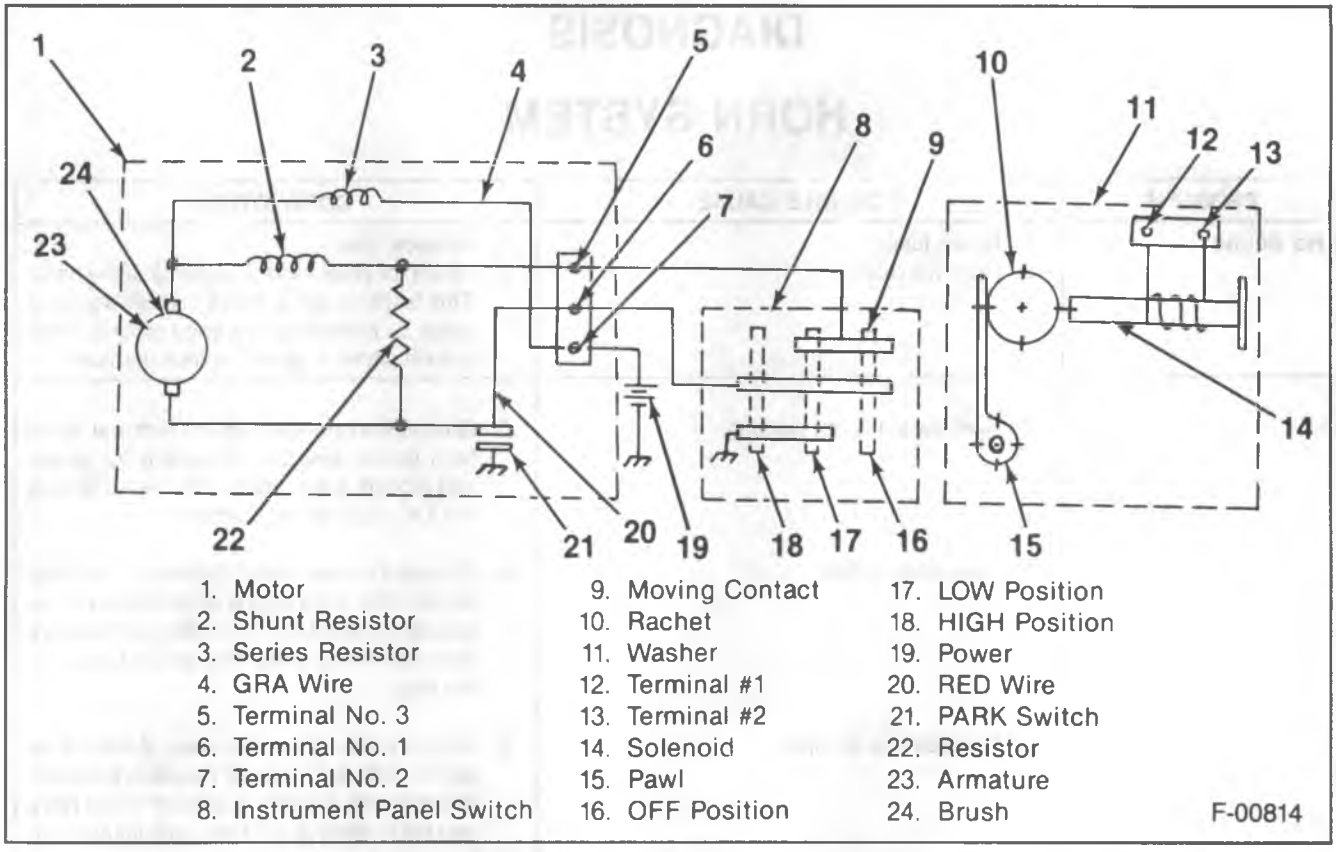

Figure 4—P-Motorhome Model Wiper Diagram

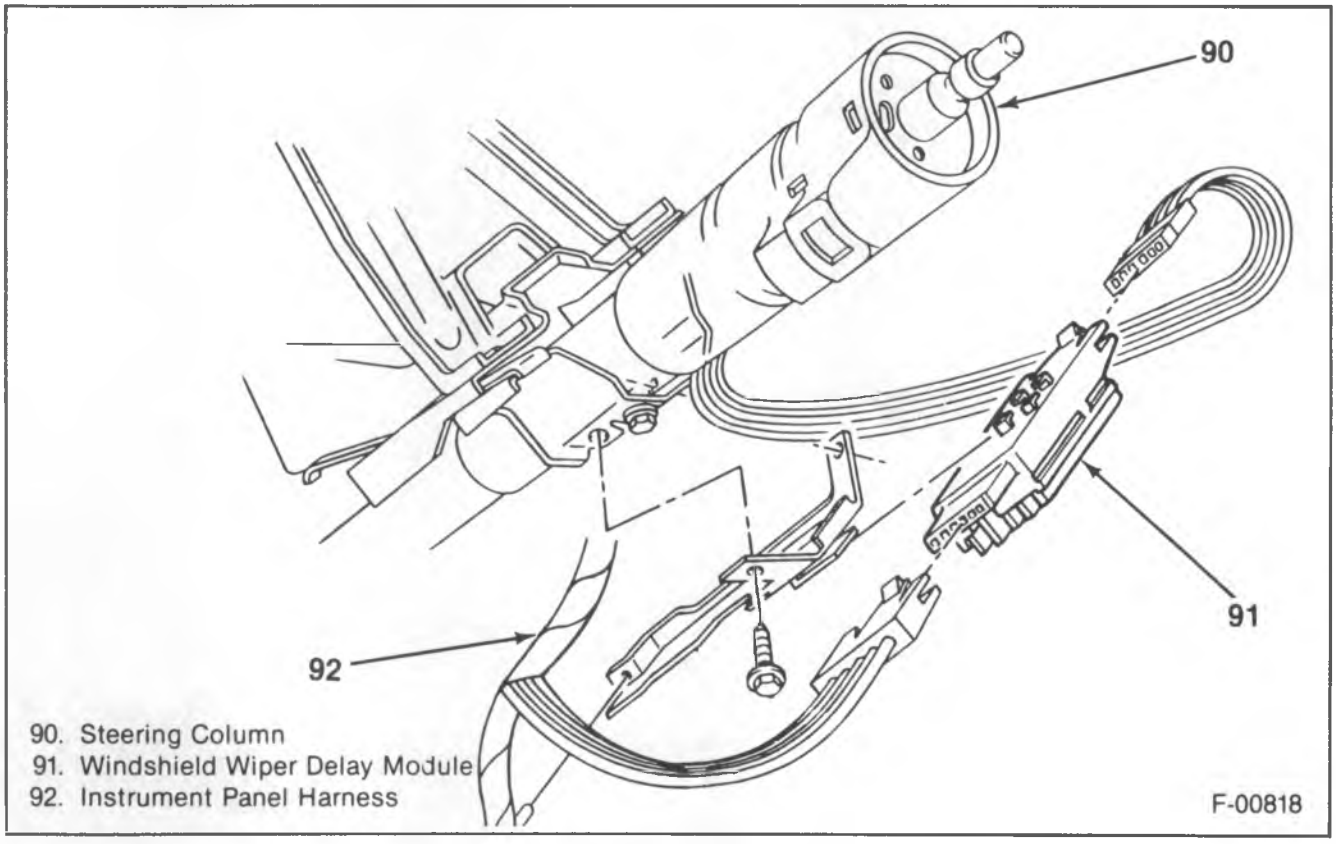

Figure 5—Wiper Delay Module

DIAGNOSIS

HORN SYSTEM

PROBLEM	POSSIBLE CAUSE	CORRECTION
No Sound	1. Blown fuse. 2. Horn won't work.	1. Replace fuse. 2. Check for power with a testlamp at the horn. If the testlamp lights, check the horn's ground circuit by jumpering to a good ground. If the ground circuit is good, replace the horn.
	3. Horn switch is not working.	3. Ground the horn relay switch terminal. If the horn works, test the hornswitch for power and ground. If the power and ground circuits are OK, replace the hornswitch.
	4. Horn relay is bad.	4. Ground the relay switch terminal. The relay should click. If the horn is still silent, leave the ground in place and jumper across the relay's main terminals. If the horn sounds, replace the relay.
	5. Harness has an open.	5. Test for power at the horn relay. If there is no power, look for an open between the relay and the fuse. If power is present at the relay and not present at the horn, look for an open between the relay and the horn.

GMTB-3118-2A

WINDSHIELD WIPER (RV AND P-COMMERCIAL MODELS)

DIAGNOSIS CHART

SYMPTOM	PROCEDURE NO.
1) WIPER INOPERATIVE - BOTH LOW AND HIGH SPEED	1
2) LOW SPEED ONLY - INOPERATIVE IN HIGH SPEED	2
3) HIGH SPEED ONLY - INOPERATIVE IN LOW SPEED	3
4) ONE SPEED - SAME IN BOTH LOW AND HIGH SPEED	4
5) BLADES STOP AT RANDOM POSITIONS WHEN WIPER IS TURNED OFF. (DO NOT RETURN TO PARK POSITION.)	5
6) WIPER WILL NOT SHUT OFF	6
7) INTERMITTENT OPERATION	7
8) WIPER MOTOR RUNS BUT BLADES DON'T MOVE	8

PROCEDURE 1 (WIPER INOPERATIVE)

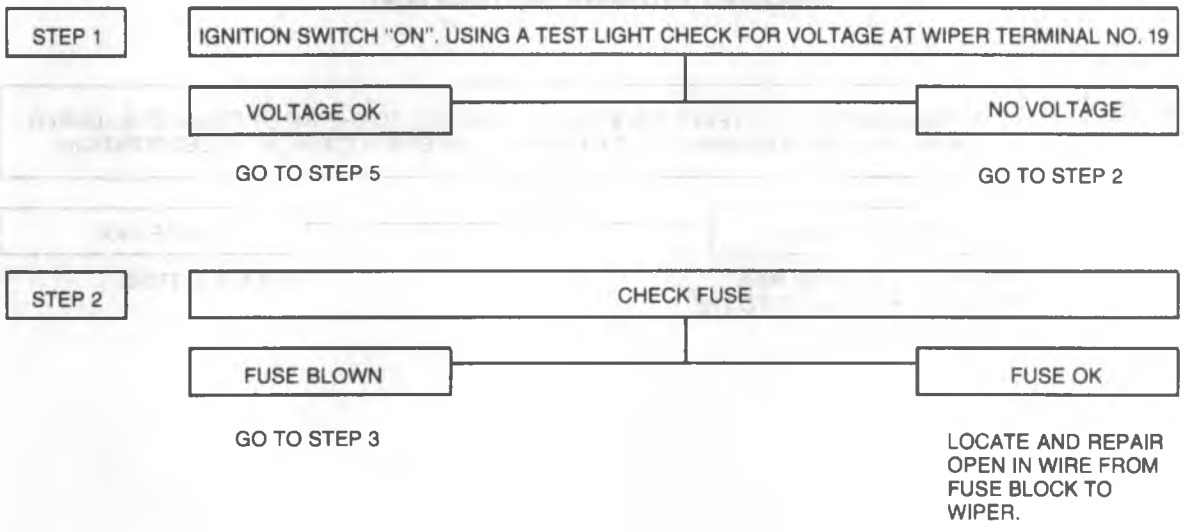

F-00715

Figure 6—Wiper Diagnosis

PROCEDURE 1 (CONT.)

STEP 3

REMOVE THE BLOWN FUSE AND CONNECT AN AMMETER 0-30 AMP. ACROSS THE FUSE BLOCK TERMINALS. OPERATE THE WIPER MOTOR AND OBSERVE IF CURRENT DRAW EXCEEDS THE CAPACITY OF THE ORIGINAL FUSE.

- CURRENT DRAW HIGH → GO TO STEP 4
- CURRENT DRAW OK → REPLACE FUSE AND RECHECK SYSTEM

STEP 4

DISCONNECT THE WIRING FROM THE WIPER MOTOR; REPLACE FUSE AND ACTUATE THE WIPER SWITCH SEVERAL TIMES. RECHECK THE FUSE WITH THE IGNITION SWITCH ON.

- FUSE BLOWN → LOCATE AND REPAIR SHORTED OR GROUNDED CONDITION IN WIRING.
- FUSE OK → PROBLEM IS IN THE MOTOR REPLACE MOTOR.

STEP 5

IGNITION SWITCH "ON". LEAVE THE WIRING CONNECTED TO THE WIPER MOTOR. CONNECT A JUMPER WIRE FROM THE TERMINAL NO. 18 TO GROUND.

- WIPER RUNS → CHECK THE WIPER SWITCH GROUND WIRE CONNECTION. IF OK, REPLACE THE WIPER SWITCH.
- WIPER INOP. → PROBLEM IS IN THE MOTOR REPLACE MOTOR.

PROCEDURE 2 (LO SPEED ONLY) (INOP IN HI)

STEP 1

IGNITION SWITCH "ON". LEAVE THE WIRING CONNECTED TO THE WIPER. CONNECT A JUMPER WIRE FROM THE TERMINAL NO. 17 TO GROUND. WIPER SWITCH IN "HI" SPEED POSITION!!

- WIPER RUNS IN HI → PROBLEM IS AN OPEN WIRE FROM TERMINAL NO. 17 TO THE COLUMN SWITCH.
- WIPER INOP. → REPLACE MOTOR.

V0436

Figure 7—Wiper Diagnosis

PROCEDURE 3 ("HI" SPEED ONLY) (INOP. IN LO)

STEP 1

IGNITION SWITCH "ON". WIPER SWITCH IN THE "LOW" SPEED POSITION. LEAVE THE WIRING CONNECTED TO THE WIPER AND CONNECT A JUMPER WIRE FROM THE TERMINAL NO. 18 TO GROUND.

- WIPER RUNS IN LO → PROBLEM IS ON OPEN WIRE FROM WIPER TERMINAL NO. 2 TO THE WIPER SWITCH.
- WIPER INOP. → REPLACE MOTOR.

PROCEDURE 4 (ONE SPEED - SAME IN BOTH LO AND HI).

STEP 1

REMOVE THE WIRING FROM THE WIPER MOTOR TERMINALS 19, 18 AND 17 AND OPERATE THE WIPER IN LOW AND HIGH. (NOTE: CURRENT DRAW IS USUALLY ABOVE NORMAL -- APPROX. 6.0 AMPS.)

- WIPER OPERATES CORRECTLY → PROBLEM IS IN THE WIRING BETWEEN THE WIPER SWITCH AND WIPER OR A FAULTY WIPER SWITCH.
- PROBLEM STILL PRESENT → REPLACE MOTOR.

PROCEDURE 5 (WIPER SHUTS OFF BUT BLADES DON'T RETURN TO PARK POSITION)

STEP 1

IGNITION SWITCH "ON". WIPER SWITCH IN "OFF". LEAVE THE WIRING CONNECTED TO THE WIPER AND CONNECT A JUMPER WIRE ACROSS TERMINALS 4 AND 3.

- WIPER RUNS → REPLACE THE WIPER PARK SWITCH ASSY.
- WIPER INOP. → WIRE FROM THE WIPER TERMINAL NO. 3 TO THE WIPER SWITCH IS OPEN OR THE SWITCH IS FAULTY.

V0437

Figure 8—Wiper Diagnosis

PROCEDURE 6 (WIPER WILL NOT SHUT OFF)

STEP 1

IGNITION SWITCH IS "ON". WIPER SWITCH IS IN THE "OFF" POSITION. DISCONNECT THE WIRING FROM THE WIPER TERMINALS 4 & 3.

- WIPER STOPS → REPAIR THE WIPER MOTOR (REPLACE THE PARK SWITCH ASSY.)
- WIPER STILL RUNS → GO TO STEP 2

STEP 2

REMOVE WIRING FROM WIPER TERMINALS 19, 18, 17. CONNECT 12v + TO WIPER TERMINAL 19 ONLY.

- WIPER DOESN'T RUN → LOCATE AND REPAIR THE GROUND CONDITION IN THE WIRES FROM THE WIPER TERMINALS 18 OR 17 TO THE WIPER SWITCH.
- WIPER STILL RUNS → REPLACE MOTOR.

PROCEDURE 7 (INTERMITTENT OPERATION) (WIPER HAS BOTH SPEEDS)

STEP 1

REMOVE THE WIPER FUSE FROM THE FUSE BLOCK AND CONNECT AN AMMETER (0-30 AMP) ACROSS THE FUSE BLOCK TERMINALS WHERE THE FUSE WAS. TURN THE IGNITION SWITCH "ON" AND RUN THE WIPER IN "HI" SPEED WITH WINDSHIELD DRY. NOTE THE **LOWEST** CURRENT DRAW READING.

- CURRENT DRAW: LESS THAN 5.0 AMPS. → A WEAK CIRCUIT BREAKER IS INDICATED. REPLACE MOTOR.
- CURRENT DRAW: EXCEEDS 5.0 AMPS. → GO TO STEP 2

STEP 2

REMOVE THE ARMS AND BLADES AND REPEAT STEP 1

- CURRENT DRAW OK → REPLACE MOTOR.
- CURRENT DRAW HI → GO TO STEP 3

STEP 3

DISCONNECT WIPER LINKAGE FROM WIPER CRANK ARM AND REPEAT STEP 1.

- CURRENT DRAW OK → CHECK WIPER LINKAGE FOR A BINDING CONDITION AND REPAIR OR REPLACE AS REQ'D. REFER TO WINDSHIELD WIPER-WASHER SYSTEM (SEC. 8E).
- CURRENT DRAW HI → PROBLEM IS IN THE WIPER MOTOR. REPLACE MOTOR.

V0438

Figure 9—Wiper Diagnosis

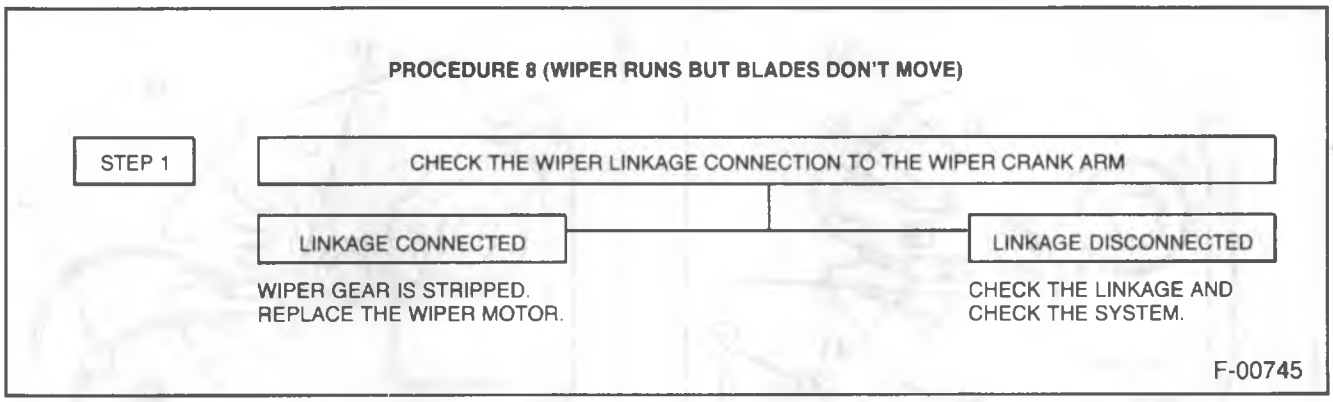

Figure 10—Wiper Diagnosis

WINDSHIELD WIPER (P-MOTORHOME MODELS)

WIPER SYSTEM CHECKS

1. Inspect for the following items:
   a. Wiring harness is securely connected to wiper switch.
   b. Wiper motor is securely grounded to body.
   c. Wiper switch is securely mounted and grounded.
   d. Check fuse.
2. If items in Step 1 check out, try operating wiper in both LO and HI speeds, then turn wiper "off" (blades should return to park position). If wiper fails to operate correctly, proceed to Step 3.
3. Disconnect wiring harness from wiper and try operating wiper as shown in figures 11, 12 and 13.
4. If wiper operates correctly independently of switch and vehicle wiring, refer to "WIPER (P-MOTORHOME MODELS)" for diagnosis.
5. If wiper still fails to operate correctly in Step 3, disconnect wiper linkage from motor crank arm and try operating wiper again. If wiper operates correctly independently of linkage, check linkage for cause of malfunction.
6. If wiper fails to operate correctly independently of linkage (Step 4), remove wiper motor from vehicle and refer to "WIPER (P-MOTORHOME MODELS)" for diagnosis.

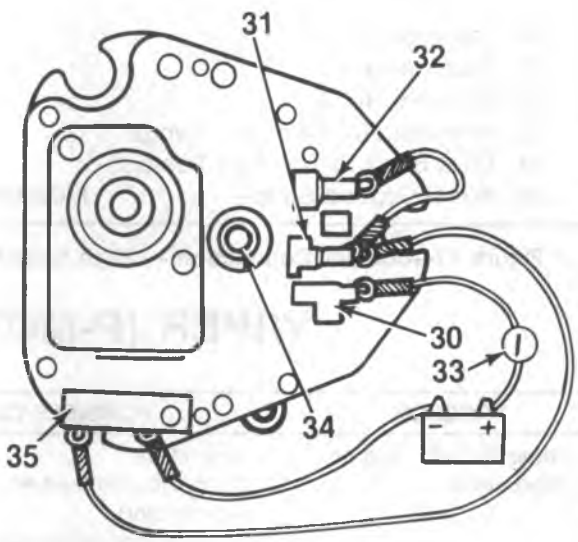

30. Terminal No. 2
31. Terminal No. 1
32. Terminal No. 3
33. Ammeter; 0-30 Ampere Range
34. Gear Shaft In The Park Position
35. Wiper Ground Strap

F-00808

Figure 11—Jumper Connection — Low Speed

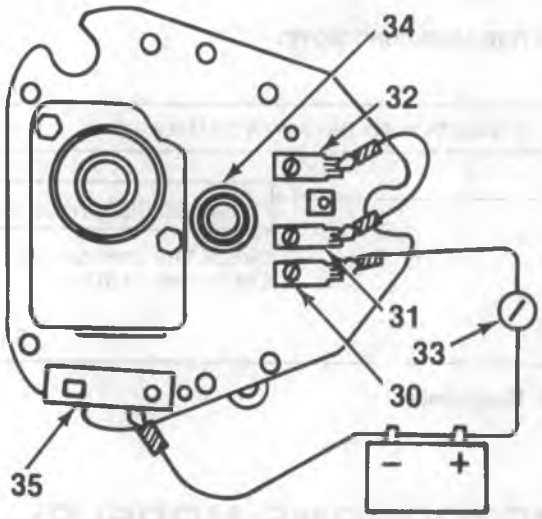

30. Terminal No. 2
31. Terminal No. 1
32. Terminal No. 3
33. Ammeter; 0-30 Ampere Range
34. Gear Shaft In The Park Position
35. Wiper Ground Strap

F-00809

Figure 12—Jumper Connection — High Speed

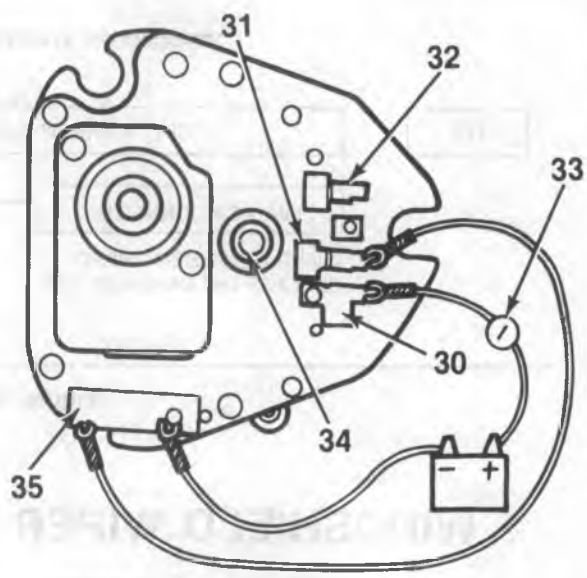

30. Terminal No. 2
31. Terminal No. 1
32. Terminal No. 3
33. Ammeter; 0-30 Ampere Range
34. Gear Shaft In The Park Position
35. Wiper Ground Strap

F-00810

Figure 13—Jumper Connection — Off

WIPER (P-MOTORHOME MODELS)

PROBLEM	POSSIBLE CAUSE	CORRECTION
Wiper Not Working or Intermittent	1. Blown fuse. 2. Open circuit in feed wire (No. 2 terminal on wiper motor). 3. Loose mounting of wiper switch. 4. Faulty wiper switch. 5. Open circuit in wire to wiper switch (No. 1 terminal on wiper motor).	1. Locate short circuit and repair. Replace fuse. 2. Locate broken wire and repair. 3. Tighten switch mounting. 4. Replace switch. 5. Locate broken wire and repair.
Wiper Will Not Shut Off. Wiper has Both "Lo" and "Hi" Speeds	Grounded wire (No. 1 terminal on wiper motor) to wiper switch.	Locate short circuit and repair.
Wiper Will Not Shut Off. Wiper Has "Lo" Speed Only	1. Defective wiper switch. 2. Grounded wire (No. 3 terminal on wiper motor) to wiper switch.	1. Replace wiper switch. 2. Locate and repair short circuit
Wiper Will Not Shut Off. Wiper has "Hi" Speed Only	1. Defective wiper switch. 2. Open circuit in wire (No. 3 terminal on wiper motor) to wiper switch.	1. Replace wiper switch. 2. Locate and repair broken wire.
Wiper Has "Hi" Speed Only	Open circuit in wire (No. 3 terminal on wiper motor) to wiper switch.	Locate broken wire and repair.
Wiper Has "Lo" Speed Only	1. Grounded wire (No. 3 terminal on wiper motor) to wiper switch. 2. Defective wiper switch.	1. Locate short circuit and repair. 2. Replace wiper switch.
Blades Do Not Return To Full Park Position	Loose wiper ground strap connection.	Tighten strap connection.

GMTB-0892-2L

WINDSHIELD WASHER (R/V AND P-COMMERCIAL MODELS)

PROBLEM	POSSIBLE CAUSE	CORRECTION
Washer Fluid Does Not Spray on the Windshield	1. No fluid. 2. Clogged jets. 3. Clogged filter in the reservoir. 4. Washer motor is not running.	1. Check the fluid reservoir. Refill, if necessary. 2. Using a fine pin, carefully clear the jets. 3. Remove the filter and back flush it. Also clean the reservoir. 4. Check for power on the WHT wire at the motor. If there is no power, and the wipers work, find the open in the power circuit. If there is power, check the PNK wire at the washer motor for ground. If the ground circuit is good, replace the washer motor.

GMTB-0891-2L

WASHER SYSTEM (P-MOTORHOME MODELS)

PROBLEM	POSSIBLE CAUSE	CORRECTION
Washers Inoperative	1. Inadequate quantity of washer solution. 2. Hoses damaged or loose. 3. Plugged screen at end of jar cover hose. 4. Loose electrical connection to washer pump or wiper switch. 5. Open circuit in feed wire to ratchet relay coil. 6. Wiper switch faulty. 7. Ratchet relay coil defective. 8. Washer nozzles plugged. 9. Ratchet wheel tooth missing. 10. Ratchet pawl spring missing. 11. Faulty pump valve assembly.	1. Add washer solution. 2. Cut short length off end of hose to insure air tight connection or replace hose. 3. Clean screen. 4. Check electrical connections and repair if necessary. 5. Replace motor. 6. Replace wiper switch. 7. Replace motor. 8. Clean washer nozzles. 9. Replace motor. 10. Replace motor. 11. Replace motor.
Washer Pumps Continuously When Wipers Are Operating	1. Grounded wire from ratchet relay to switch. 2. Wiper switch faulty. 3. Ratchet wheel tooth missing. 4. Ratchet wheel dog broken or not contacting ratchet wheel teeth. 5. Lock-out tang broken or bent on piston actuating plate.	1. Locate grounded wire and repair. 2. Replace wiper switch. 3. Replace motor. 4. Replace motor. 5. Replace motor.

GMTB-3172-2A

WIPER DELAY CIRCUIT

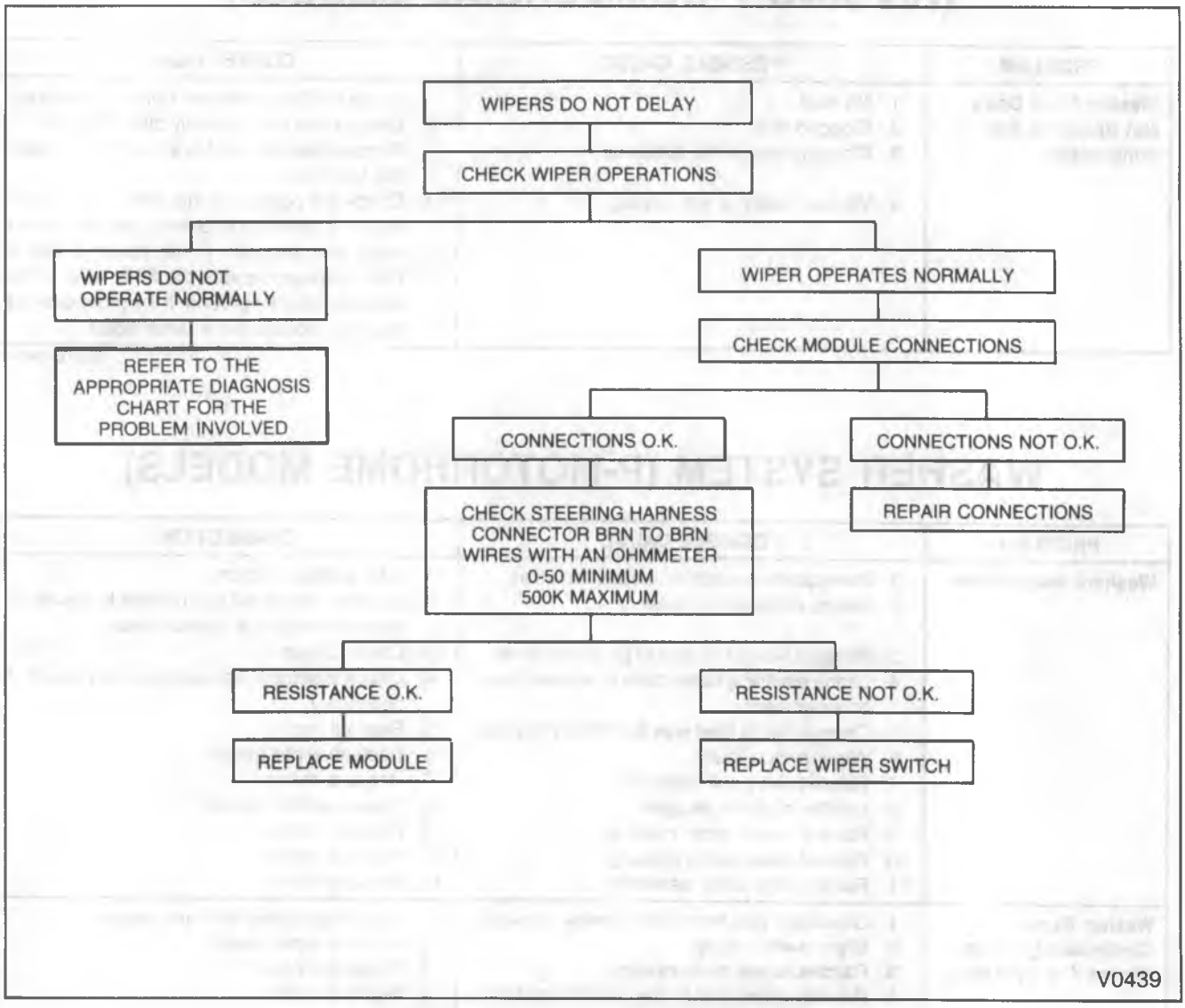

Figure 14—Diagnosis of the Wiper Delay Circuit

ON-VEHICLE SERVICE

HORN REPLACEMENT

R/V MODELS

Remove or Disconnect (Figure 15)

1. Headlamp bezels. Refer to LIGHTING SYSTEMS (SEC 8B).
2. Grille assembly.
3. Horn connector (95).
4. Horn retainer screw (90).
5. Horn (95 or 96).

Install or Connect (Figure 15)

1. Horn and retainer screw (95 or 96 and 90).
2. Horn connector (95).
3. Grille assembly.
4. Headlamp bezels. Refer to LIGHTING SYSTEMS (SEC 8B).

P MODELS

Horn replacement procedures are not included here since installation is performed by the individual body manufacturer and location may vary.

WIPER MOTOR REPLACEMENT

R/V MODELS

Remove or Disconnect (Figure 16)

- Wiper motor must be in the park position.

1. Battery ground cable from the battery.
2. Electrical harness connectors (37 and 39) from the wiper motor.
3. Wiper motor to dash panel attaching screws (30).
   - Pull motor away from dash panel far enough to gain access to crank arm attaching nut.
4. Crank arm attaching nut (71) and arm (70) from motor.
5. Wiper motor.

Install or Connect (Figures 16, 21 and 22)

1. Crank arm to wiper motor.
   - Refer to figures 21 and 22 for proper crank arm position.
2. Wiper motor.
3. Wiper motor to dash panel attaching screws.
4. Electrical harness connectors (37 and 39) to the motor.
5. Battery ground cable to battery.

P MODELS

Wiper motor replacement procedures are not included here since installation is performed by the individual body manufacturers.

WASHER MOTOR REPLACEMENT

R/V MODELS

Install or Connect (Figure 17)

1. Battery ground cable from the battery.
2. Two reservoir retaining screws (52).
3. Reservoir (53).
4. Electrical connector (51) at the motor (54).
5. Fluid tube at the motor (54).
6. Motor from the reservoir (54).

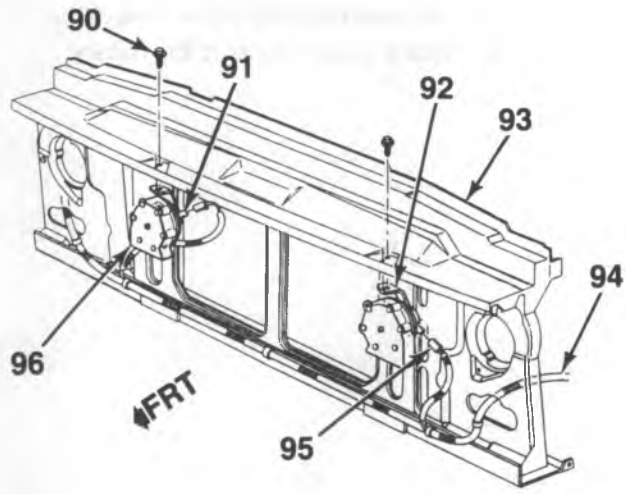

90. Screw
91. Horn Cap
92. Low Note Horn
93. Radiator Support
94. Forward Lamp Wiring Harness
95. Horn Connector
96. Hi Note Horn

V0186

Figure 15—Horn Assembly R/V Models

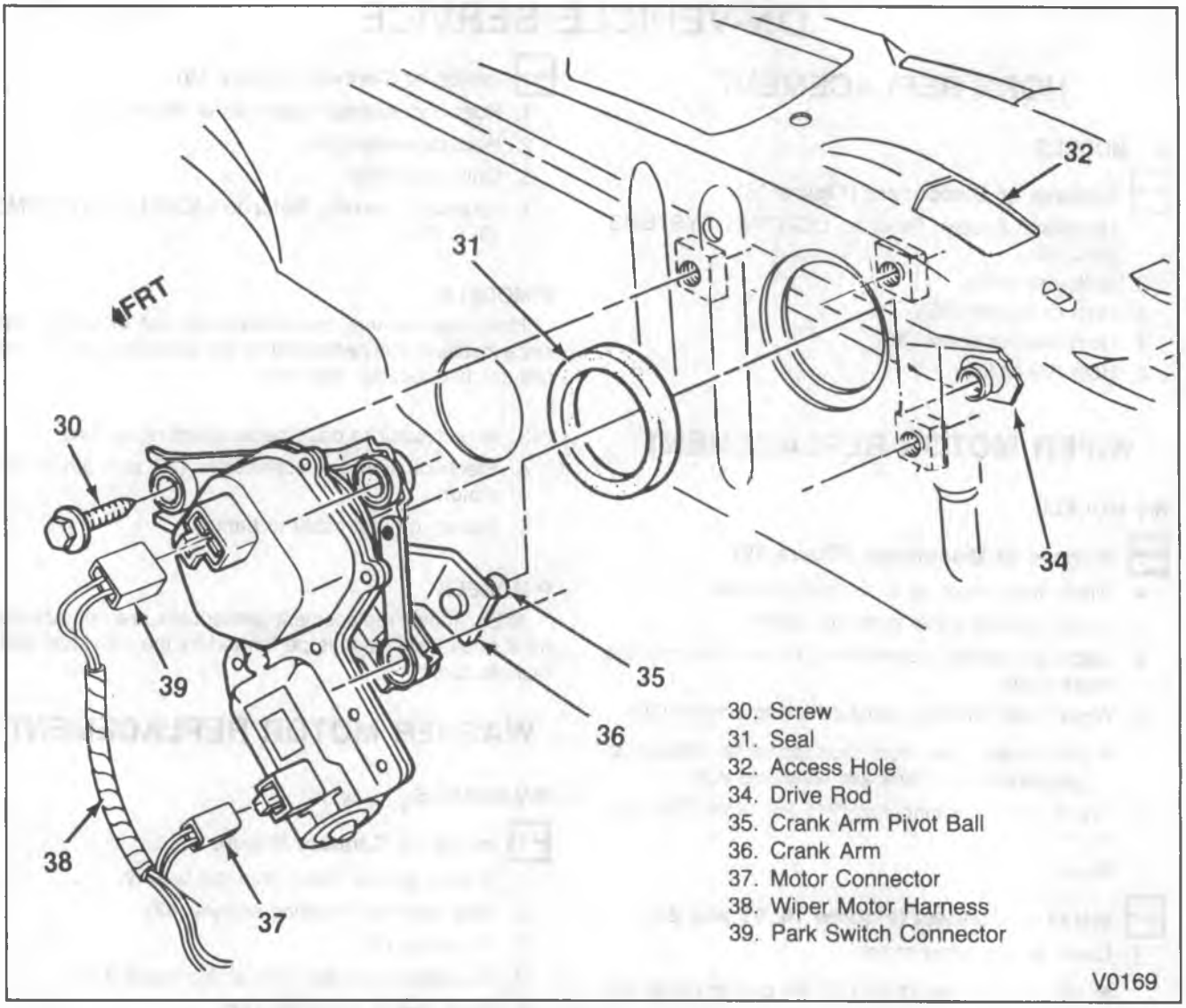

Figure 16—R/V Wiper Motor Mounting

Install or Connect (Figure 17)

1. Motor (54) to the reservoir (53).
2. Fluid tube at the motor (54).
3. Electrical connector (51) at the motor (54).
4. Reservoir (53).
5. Two reservoir retaining screws (52).
6. Battery ground cable to the battery.

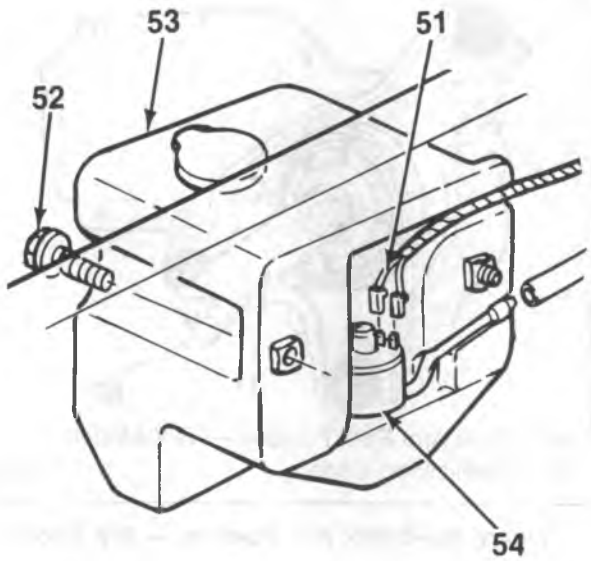

51. Windshield Washer Motor Connector
52. Reservoir Retaining Screw
53. Washer Fluid Reservoir
54. Windshield Washer Motor

F-00748

Figure 17—R/V Windshield Washer

WIPER DELAY MODULE REPLACEMENT

Remove or Disconnect (Figure 5)

1. Steering column lower covers.
2. Harness connectors.
3. Module (91) by sliding it off the bracket.

Install or Connect (Figure 5)

1. Module onto bracket.
2. Harness connectors.
3. Steering column covers.

WIPER DELAY SWITCH REPLACEMENT

The wiper delay switch is part of a multi-function lever. Refer to ACCESSORIES (SEC. 9) for replacement procedures.

UNIT REPAIR

PARK SWITCH

Remove or Disconnect (Figure 18)

1. Cover.
2. Park switch.
   - Depress tang (61).

Install or Connect (Figure 18)

1. Park switch.
2. Cover.

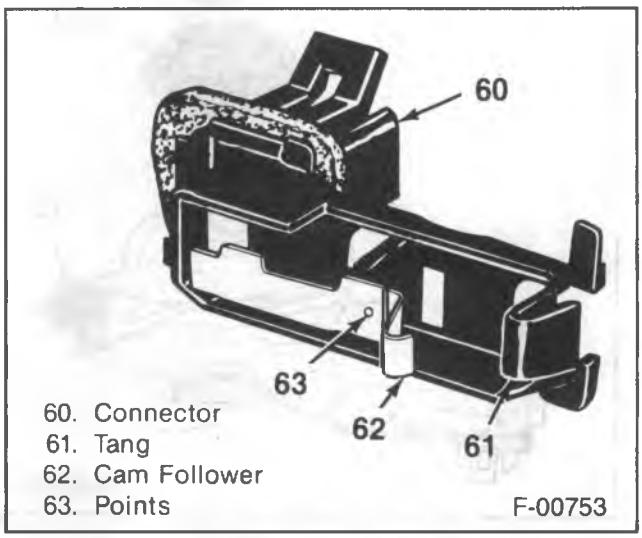

60. Connector
61. Tang
62. Cam Follower
63. Points

F-00753

Figure 18—Park Switch

CRANK ARM, SPACER, SEAL

Remove or Disconnect (Figure 19)

1. Crank arm retaining nut (71).
   - Have the crank arm clamped in a vise.
2. Crank arm (70).
3. Shaft seal (72).
4. Spacer (73).

Install or Connect (Figures 19, 20 and 21)

1. Spacer (73).
2. Shaft seal (72).
3. Crank arm (70).
   - Be sure the wiper motor is in "Park."
   - Install the crank arm according to figure 20.
4. Crank arm retaining nut (71).

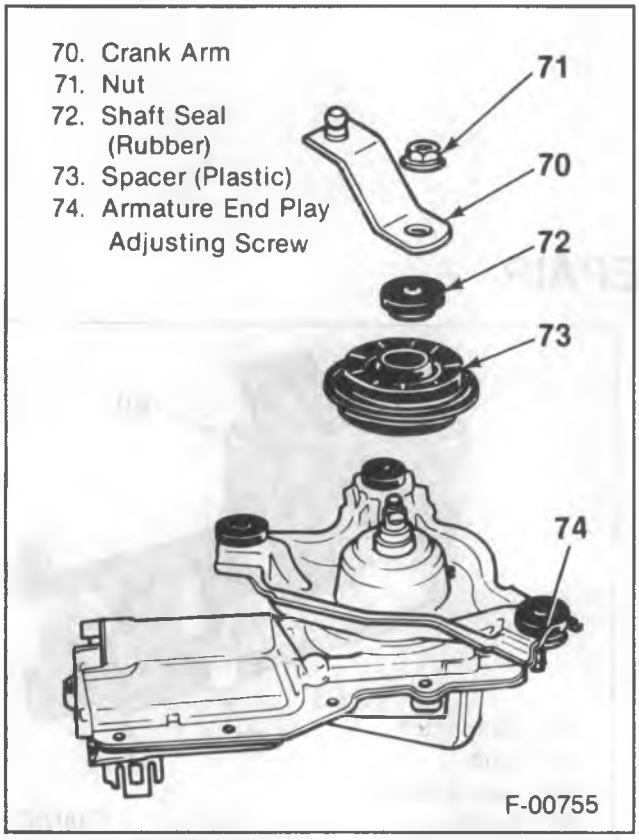

Figure 19—Crank Arm, Spacer and Seal

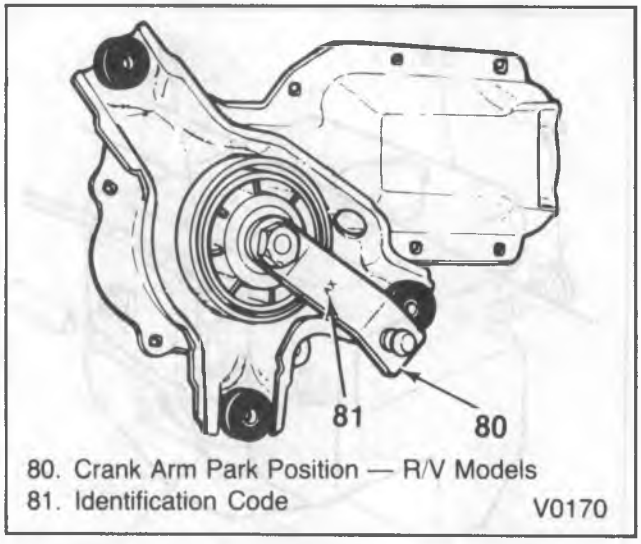

Figure 20—Crank Arm Position — R/V Models

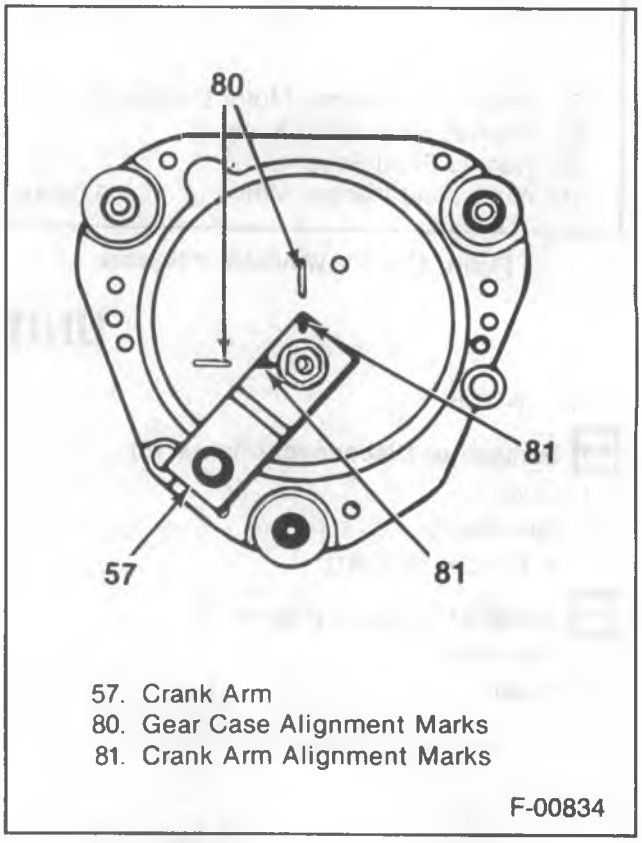

Figure 21—Park Alignment — P Models

WASHER PUMP (P MODELS WITHOUT DELAY)

Remove or Disconnect (Figures 21 and 22)

1. Two washer pump mounting screws (72).
2. Pump (71) from the gear box cover.
3. Washer pump drive cam (75).
   - Wedge off the cam and the plate using two screwdrivers.

Install or Connect (Figures 21 and 22)

1. Washer pump drive cam (75).
   - Press the cam on the shaft.
2. Pump (71) on the gear box cover.
3. Two pump mounting screws (72).

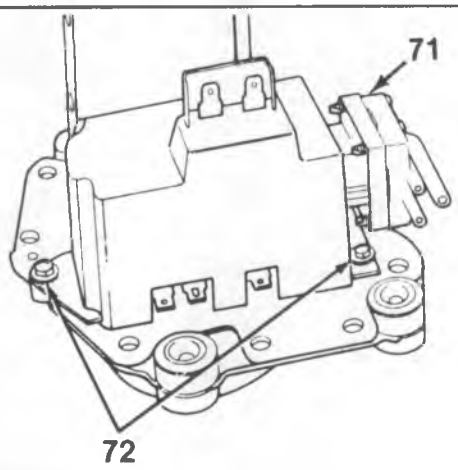

71. Pump
72. Pump Mounting Screws F-00832

Figure 22—Washer Pump Mounting Screws

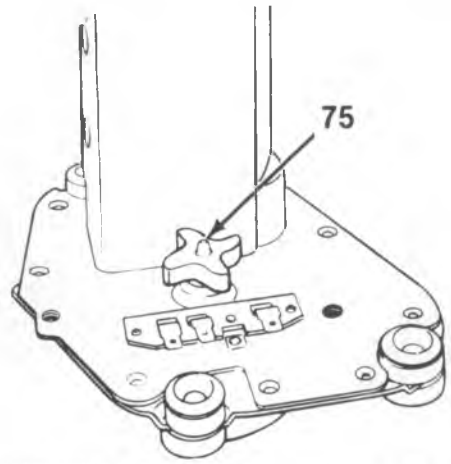

75. Cam (Press Fit On Shaft) F-00833

Figure 23—Drive Cam

SECTION 8E

WINDSHIELD WIPER/WASHER SYSTEM

NOTICE: When fasteners are removed, always reinstall them at the same location from which they were removed. If a fastener needs to be replaced, use the correct part number fastener for that application. If the correct part number fastener is not available, a fastener of equal size and strength (or stronger) may be used. Fasteners that are not reused, and those requiring thread locking compound will be called out. The correct torque value must be used when installing fasteners that require it. If the above conditions are not followed, parts or system damage could result.

CONTENTS

SUBJECT	PAGE
Description	8E-1
Diagnosis	8E-2
On-Vehicle Service	8E-3
Wiper Insert Replacement	8E-3
Wiper Blade Assembly Replacement	8E-4
Wiper Arm Assembly Replacement	8E-4
Washer Nozzle Replacement	8E-4
Washer Supply Hose Replacement	8E-4
Washer Nozzle Connector Replacement	8E-5
Washer Fluid Container Replacement	8E-5
Transmission Assembly Replacement	8E-6

DESCRIPTION

This section contains information on the wiper linkage system, (which is called the transmission), the blades and arms, and the washer system (including the hoses, nozzles and fluid container).

The windshield wiper motor transmits rotating power to the transmission assembly. The transmission assembly coverts this rotating action into a reciprocating action so the wiper arms and blades will wipe across the windshield.

DIAGNOSIS

PROBLEM	POSSIBLE CAUSE	CORRECTION
Wipers Inoperative (Motor Not Working).	1. Wiper system electrical malfunction.	1. Refer to CHASSIS ELECTRICAL (SEC. 8D) for electrical diagnosis.
Wipers Inoperative (Motor Working).	1. Gear train damage internal to the motor. 2. Transmission disconnected. 3. Transmission damaged.	1. Refer to CHASSIS ELECTRICAL (SEC. 8D) to replace motor. 2. Re-connect transmission. 3. Replace transmission assembly.
Washers Inoperative.	1. Washer fluid container empty. 2. Hoses disconnected. 3. Hoses kinked. 4. Hoses or nozzles plugged. 5. Washer pump inoperative.	1. Refill container. 2. Re-connect hoses. 3. Re-route or replace hoses. 4. Clear hoses by blowing air through them. Replace if required. 5. Refer to CHASSIS ELECTRICAL (SEC. 8D) for electrical diagnosis.
Poor Spray Pattern.	1. Nozzles plugged or dirty.	1. Clean dirt from nozzles or blow air through them. Replace if required.
Wipers Chatter.	1. Glass not clean. 2. Wiper inserts dirty. 3. Wiper arm pressure incorrect. See figure 1.	1. Clean glass with GM glass cleaner or equivalent. Glass is clean when water "sheets" off instead of "beading up." 2. Clean inserts with 50% solution of water and GM Opti Kleen or 50% solution of water and methyl alcohol. Rinse inserts with clean water and re-install. 3. Replace arm assembly.
Poor Wipe Pattern.	1. Arms adjusted poorly.	1. Adjust arms to make full wipe of glass.

GMTB-3184-2A

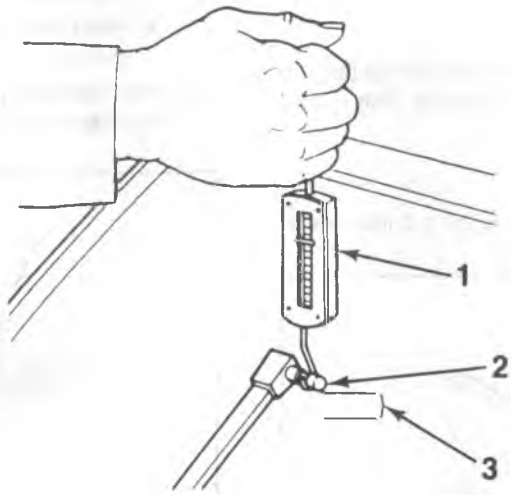

1. "Fish" Scale
2. Wiper Blade Attaching Pin
3. Lift Arm Approximately 1/2 Inch Above Glass

Note: Blades Should Be in the Middle of Its Stroke
Tip Pressure = 28 to 34 Ounces

V0474

Figure 1—Checking Wiper Arm Pressure

ON-VEHICLE SERVICE

WIPER INSERT REPLACEMENT

Remove or Disconnect (Figure 2)

1. Blade assembly from arm. Refer to "Wiper Blade Assembly Replacement" in this section.
2. Insert from blade.
   - Squeeze locking tabs together and pull the insert from the blade.

Install or Connect (Figure 2)

1. Insert.
   - Guide insert into blade assembly being sure insert is fed through the locating tabs of the blade.
   - Insert is fully seated when both locking tabs engage the blade.
2. Blade assembly onto arm. Refer to "Wiper Arm Assembly Replacement" in this section.

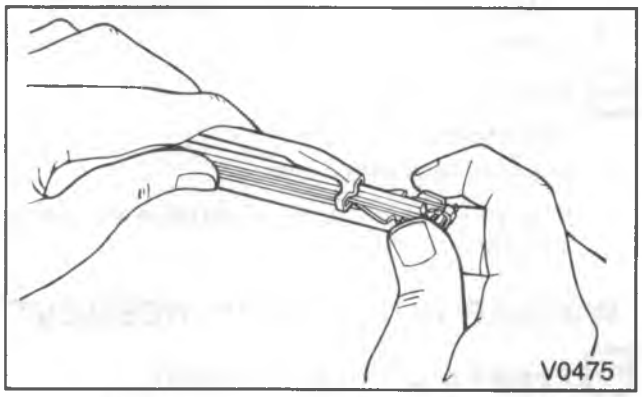

Figure 2—Removing Wiper Inserts From the Blade

WIPER BLADE ASSEMBLY REPLACEMENT

Remove or Disconnect (Figure 3)

1. Blade assembly from arm.
   - Use a narrow bladed screwdriver to release the retainer spring in the blade assembly. See Figure 3.

Install or Connect

1. Blade assembly onto arm by snapping it into place.

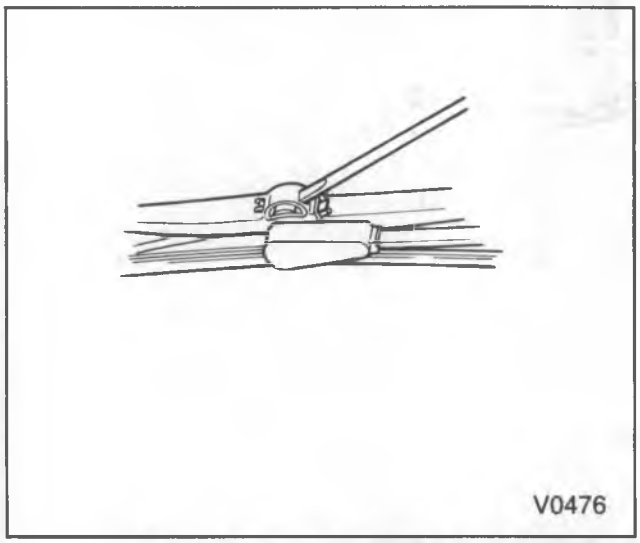

Figure 3—Wiper Blade Removal

WIPER ARM ASSEMBLY REPLACEMENT

Remove or Disconnect

1. Arm assembly.
   - Grasp the arm and work it off the transmission pivot. It will be very tight. Kent-Moore supplies tool J 8966 to ease removal and installation of the wiper arms, though it is not required.
2. Washer hose from connector.

Install or Connect

1. Washer hose onto connector.
2. Arm onto transmission pivot.
   - Be sure to install the arm so the blade will make an entire wipe of the glass.

WASHER NOZZLE REPLACEMENT

Remove or Disconnect (Figure 4)

1. Wiper arm assembly (4). Refer to "Wiper Arm Assembly Replacement" in this section.
2. Nozzle (16).
   - Pull hose through spring and hose guard.

Install or Connect

1. Nozzle (16).
   - Fit nozzle onto arm with the locating tab on the nozzle set into the locating hole (A) in the arm.
   - Feed the hose through the hose guard and the spring.
2. Arm assembly (4). Refer to "Wiper Arm Assembly Replacement" in this section.

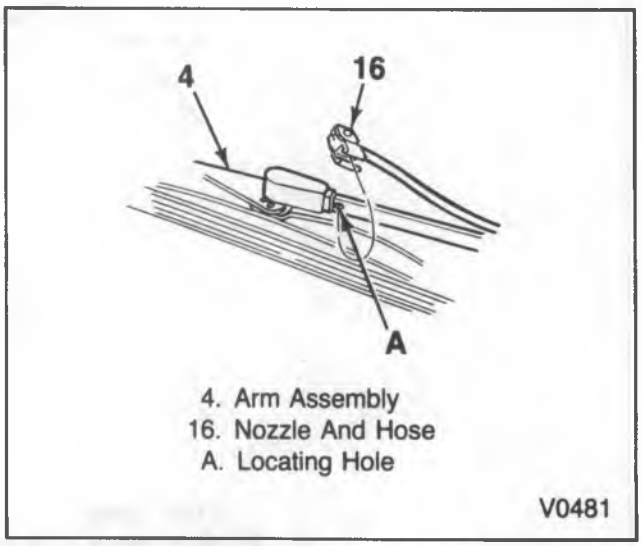

Figure 4—Nozzle and Hose Replacement

WASHER SUPPLY HOSE REPLACEMENT

Remove or Disconnect (Figure 5)

1. Both wiper arms. Refer to "Wiper Arm Assembly Replacement" in this section.
2. Air inlet grille panel.
3. Air inlet screen (16).
4. Hoses (10), from the connectors (7 and 9).
   - Pull hoses through straps (6).
5. Hose (11).
   - Disconnect hose (11) from pump.
   - Pull hose (11) through conduit with connector.
6. Connector (9) from hose (11).

Install or Connect (Figure 5)

1. Hose (11) to pump.
   - Feed hose through conduit.
2. Hose (11) to connector (9).
3. Hoses (10) to connector (9).
   - Feed hoses (10) through straps (8).
4. Hoses (10) to connector (7).
5. Air inlet screen (16).
6. Air inlet grille panel.
7. Wiper arms assemblies. Refer to "Wiper Arm Assembly Replacement" in this section.

WASHER NOZZLE CONNECTOR REPLACEMENT

Remove or Disconnect (Figure 5)

1. Wiper arm. Refer to "Wiper Arm Assembly Replacement" in this section.
2. Air inlet grille.
3. Air inlet screen (16).
4. Hose (10) from connector (7).
5. Connector (7).

Install or Connect (Figure 5)

1. Connector (7).
2. Hose (10).
3. Air inlet screen (16).
4. Air inlet grille panel.
5. Wiper arms. Refer to "Wiper Arm Assembly Replacement" in this section.

WASHER FLUID CONTAINER REPLACEMENT

Remove or Disconnect (Figure 5)

1. Hose (9) from pump.
2. Bolts (19).
3. Container (20).
4. Harness connector (21) from pump.
5. Pump assembly.
   - Slide pump stem up and off grommet.

Install or Connect (Figure 5)

1. Pump assembly.
   - Push pump stem down and fully seated to grommet.
2. Harness connector (21).
3. Hose (9) to pump.

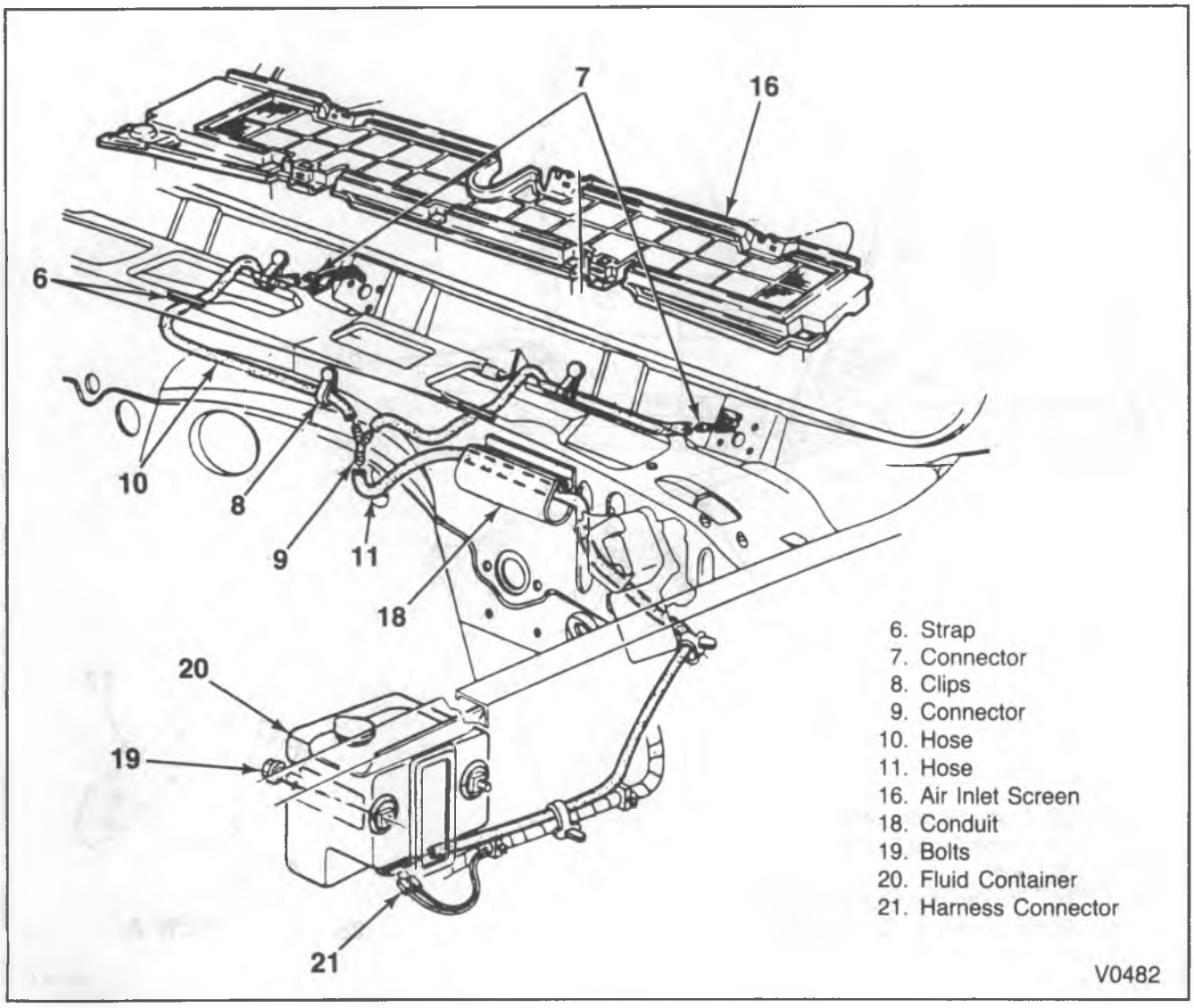

Figure 5—Washer Supply Hose System Parts and Routing

4. Container (20).

NOTICE: See "Notice" on page 8E-1 of this section.

Tighten

- Bolts (19) to 10 N•m (89 in. lbs.).

TRANSMISSION ASSEMBLY REPLACEMENT

Remove or Disconnect (Figures 5 and 6)

1. Wiper arms. Refer to "Wiper Arm Assembly Replacement" in this section.
2. Air inlet screen (16).
3. Transmission arm (22) from wiper motor crank arm.
   - Reach in through large access hole (23) and pop transmission arm off using a large screwdriver.
5. Bolts (24).
6. Transmission assembly.

Install or Connect

1. Transmission assembly (25).
   - Set transmission pivots in place before bolting assembly in place.

NOTICE: See "Notice" on page 8E-1 of this section.

Tighten

- Bolts (24) to 8 N•m (71 in. lbs.).

3. Transmission arm (22) onto wiper motor crank arm (26).
   - Reach into access hole (23) and squeeze arm (22) onto crank arm using pliers.
4. Air inlet screen (16).
5. Air inlet grille panel.
6. Wiper arms. Refer to "Wiper Arm Assembly Replacement" in this section.

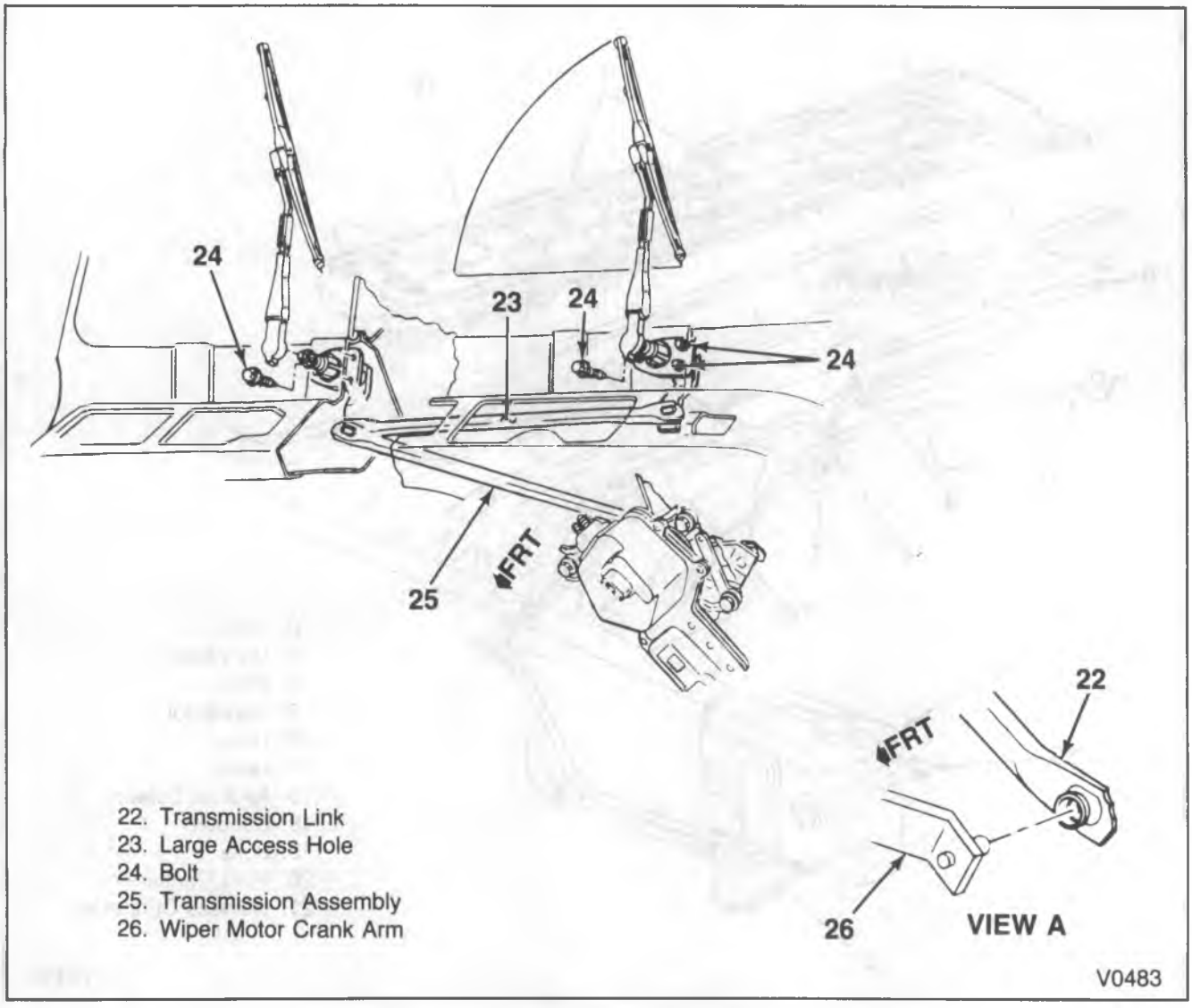

Figure 6—Transmission Assembly

SECTION 9

ACCESSORIES

NOTICE: When fasteners are removed, always reinstall them at the same location from which they were removed. If a fastener needs to be replaced, use the correct part number fastener for that application. If the correct part number fastener is not available, a fastener of equal size and strength (or stronger) may be used. Fasteners that are not reused, and those requiring thread locking compound will be called out. The correct torque value must be used when installing fasteners that require it. If the above conditions are not followed, parts or system damage could result.

CONTENTS

SUBJECT	PAGE
Cruise Control Description	9- 1
Operation	9- 2
Components	9- 3
Diagnosis of Cruise Control System	9- 4
Cruise Control On-Vehicle Service	9-18
Vacuum Release Valve Replacement	9-18
Clutch Release Switch Replacement	9-19
Brake Release Switch Replacement	9-19
Cruise Control Module Replacement	9-19
Stepper Motor (Module) Replacement and Adjustment	9-20
Multifunction Switch Replacement	9-20
Servo Replacement	9-21
Radio Description	9-24
Diagnosis of Radio Systems	9-24
Accessory Noise	9-34
Diagnostic RF Sniffer	9-36
Radio On-Vehicle Service	9-36
Radio Receiver Replacement	9-36
Antenna Replacement	9-36
Speaker Replacement	9-37
Rear Window Defogger Description	9-41
Rear Window Defogger Harness	9-41
Diagnosis of Rear Window Defogger System	9-43
Rear Window Defogger On-Vehicle Service	9-43
Rear Window Defogger Switch Replacement	9-43
Testing Grid Lines	9-44

CRUISE CONTROL DESCRIPTION

Cruise control is a speed control system which maintains a desired vehicle speed under normal driving conditions. However, steep grades up or down may cause variations in the selected speeds. The electronic cruise control system has the capability to cruise, coast, resume speed, accelerate, "tap-up" and "tap-down" (figure 1).

The main parts of the cruise control system on R/V models are the mode control switches, controller (module), servo unit, speed sensor, vacuum supply, electrical and vacuum release switches, and electrical harness.

The cruise control system used on P-Models incorporates a stepper motor module, mode control switches, speed sensor, electrical release switches, and electrical wiring.

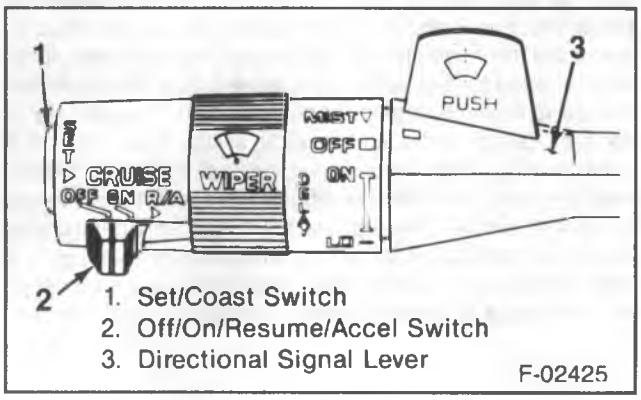

Figure 1—Multi-Function Lever

The R/V cruise control system uses vacuum to operate a throttle servo unit. The servo unit maintains a desired vehicle speed by trapping vacuum in the servo unit at the proper servo position. The controller monitors vehicle speed and servo position and operates the vacuum and vent valves in the servo to maintain desired speed. The controller contains a low speed limit which will prevent system engagement below a minimum speed about 25 mph. The operation of the controller is controlled by mode control switches located in the end of the directional signal lever. To disengage the system, two release switches are provided. An electrical release switch mounted on the brake pedal bracket (and clutch pedal bracket on vehicles equipped with manual transmission) disengages the system electrically when the brake pedal (or clutch pedal) is depressed. A vacuum release valve, mounted on the brake pedal bracket, vents the trapped vacuum in the servo to atmosphere when the brake pedal is depressed, allowing the servo unit to quickly return the throttle to idle position.

The P-Motorhome cruise control system uses only the input provided by the vehicle speed sensor to maintain desired speeds. This system does not use vacuum or a servo. Low speed limit remains at 25 mph. Mode control switches are also located at the end of the directional signal lever. P-Motorhomes also use release switches located on the clutch pedal bracket (vehicles equipped with manual transmissions), and two switches located on the brake pedal bracket. The switch mounted near the top of the bracket controls Torque Converter Clutch (TCC) and cruise control release, while the lower mounted switch is the stoplamp switch and a redundant cruise control release switch. (figure 2).

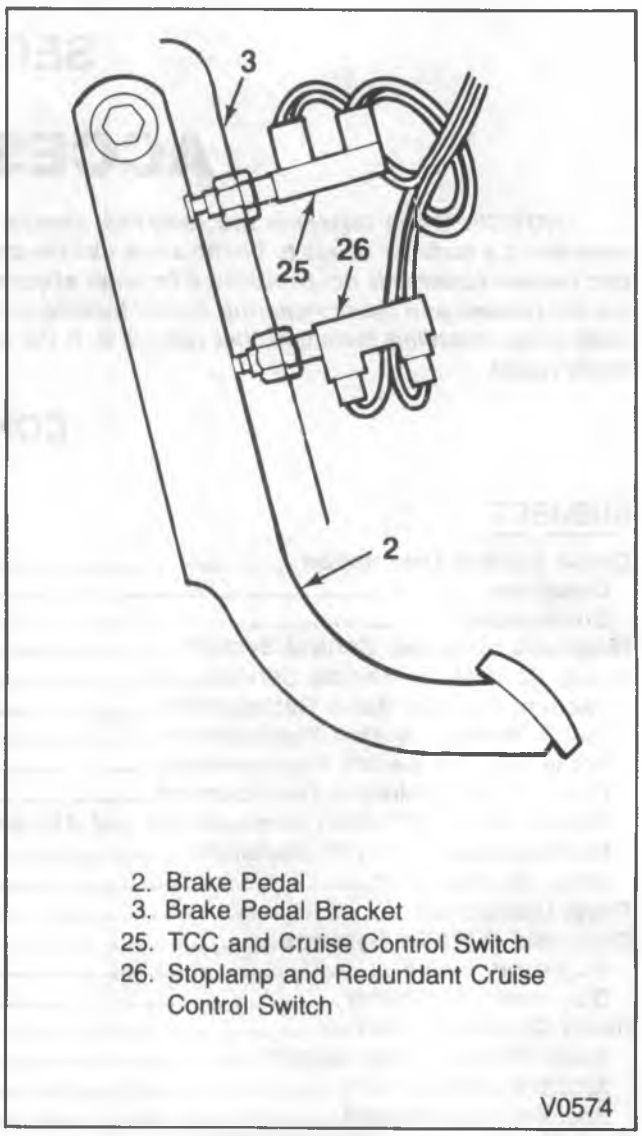

Figure 2—P-Motorhome Cruise Control Release Switches

OPERATION

OFF/ON/RESUME/ACCEL SWITCH

The Off/On/Resume/Accel Switch (figure 1) has three positions. This switch turns the cruise control system ON and OFF and also returns cruise control operation to the last speed setting when MOMENTARILY moved towards the R/A position after braking. (Do not hold the slider in the R/A position ... release it immediately.) If the slider is held in the R/A position for more than one second, the system reverts the the Accel mode. To accelerate the vehicle, move the slider switch to the R/A position and hold it there until the vehicle reaches the desired increased speed. When the slider switch is released, the speed of the vehicle accelerated to becomes the new cruise speed. In order to use the Accel mode, the cruise OFF/ON/Resume/Accel switch must be in the "On" position on the vehicle must be above the low speed lockout (25 mph). The slide switch can also be used to "tap-up" vehicle speed. In order to do this the cruise must be engaged and operating. "Tapping-up" is done by quickly pressing the slide switch toward the R/A position and quickly releasing it, or "tap" the lever. Do not hold the lever in the R/A position or the system will revert to the Accel mode. "Tap-up" is a function in which cruise speed can be increased by 1 mph increments (one tap = 1 mph increase) up to ten times, after 10 times the system must be reset to a new speed to continue this function.

SET/COAST BUTTON SWITCH

The cruise control Set/Coast Switch, located in the end of the turn signal lever (figure 1), has two positions — "Normal" and "Depressed".

The Set Position — With the button switch depressed and then released, vehicle speed must exceed the low speed limit point, and the Off/On/Resume/Accel Switch must be in the ON position) the cruise speed will be set at the particular speed the vehicle was at when the button was released. Vehicle cruise speed will be within ± 1 mph of the actual speed when engaged. The system will cruise until either the Off/On/Resume/Accel Switch is moved to OFF, the ignition switch is turned off, and/or the Set/Coast Button is pushed in fully and held. Pushing the brake pedal (or clutch pedal) releases the cruise but not the resume capability.

The Coast (Trim) Position — With the button switch fully depressed, the driver can raise or lower his control speed. To increase control speed, the driver would accelerate to a new speed, fully depress the switch (controller releases previously set speed) and release the button. Upon releasing the button a new speed is set. An increased control speed can also be more easily set by the Off/On/Resume/Accel Switch as previously described. To decrease cruise speed, the button switch is held in (depressed position) disengaging the cruise system, and allowing the throttle to return to the idle position. When the vehicle has slowed to the desired lower cruise speed, releasing the switch will reengage the system.

The "Tap-Down" Position — In order to do this the cruise must be engaged and operating "Tapping-down" is done by quickly pressing the Set/Coast Button to the depressed position and quickly releasing it, or "tap" the button. Do not hold the button in the depressed position or the system will revert to the "coast" mode. "Tap-down" is a function in which cruise speed can be decreased by 1 mph increments (one tap = 1 mph decrease). The system can "tap-down" until it reaches the low speed lockout (25 mph), after this cruise will not operate.

The accelerator may be depressed at any time to override the cruise system. Release of the accelerator will return the car to the previous set cruise speed.

NOTICE: To keep the vehicle under control, and to prevent possible vehicle damage, it is not advisable to use the Cruise Control on slippery roads. It is not recommended to use the cruise control in conditions such as on winding roads or in traffic of heavy or varying volume. When traveling down a steeply graded hill, the cruise control should be disengaged by depressing the brake pedal lightly. The transmission can then be shifted into a lower gear range to help control vehicle speed.

COMPONENTS

ELECTRONIC CONTROLLER (MODULE)(R/V MODELS) (Figure 3)

The controller interprets the position of the servo, the position of the mode control switches and the output of the speed sensor. In response to these inputs, the controller electrically signals the opening or closing of the vent and vacuum solenoid valves in the servo.

The controller is mounted on the back of the instrument panel next to the steering column.

STEPPER MOTOR (MODULE) (P-MOTORHOME)

The stepper motor interprets the position of the mode control switches and the output of the speed sensor. In response to these inputs, the stepper motor controls throttle position.

The stepper motor is mounted on the upper radiator support.

SERVO UNIT (R/V MODELS) (Figure 4)

The servo consists of a vacuum operated diaphragm, a normally open solenoid valve to vent the diaphragm chamber to atmosphere, a normally closed solenoid valve to connect the diaphragm chamber to the vacuum source, and a variable inductance position sensor. The servo operates the throttle in response to signals from the electronic controller as follows.

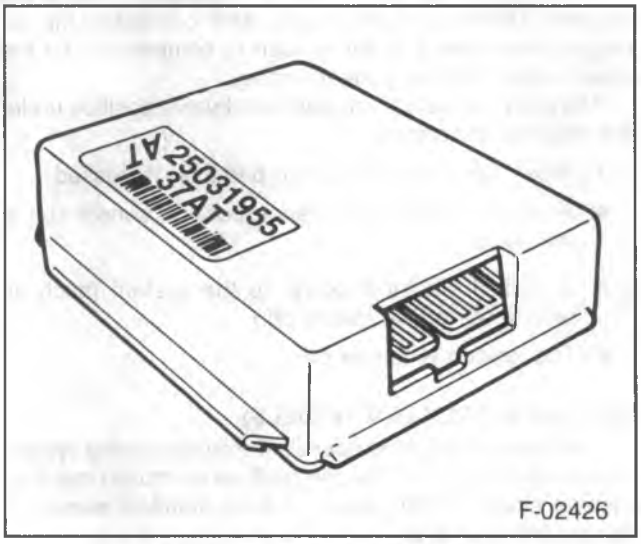

Figure 3—Controller Module

- **Steady Cruise State** (system engaged and operating) — Both vacuum and vent valves are closed or sealed. The servo has a constant vacuum on the diaphragm and places no-flow requirements on the vacuum source. Vacuum is trapped in diaphragm chamber.
- **Vehicle Losing Speed** (due to steep grades or driver wishes to increase speed by operating mode control switches) — The controller energizes the vacuum solenoid to open vacuum valve to the vacuum source. This increases the vacuum level in the servo to increase the throttle opening. The vent remains closed.
- **Vehicle Gaining Speed** (due to speed grades or driver wishes to decrease speed by operating mode control switches) — The controller de-energizes the vent solenoid to open the vent solenoid to open the vent valve to the atmosphere which reduces vacuum in the servo and allows the throttle return spring to decrease the throttle opening. The vacuum valve remains closed.

When the cruise system is engaged and operating (without any interference from the driver via the mode control switches), no speed correction will be made until the vehicle exceeds approximately ± 1/4 mph of set speed.

When the controller senses an over or underspeed condition it will pulse the opening of the vent or vacuum valve. The average duration of one pulse will be 10 milliseconds. The pulse will be repeated, as required, until the speed correction required brings the vehicle to the set speed. From any set speed, under normal road load conditions, the vacuum valve will remain in a completely open position when vehicle speed has dropped 5 mph below set speed. Likewise, when vehicle speed has exceeded 3 mph over the set speed, such as down a steep grade, the vent will go into constant open position.

The servo incorporates a steel core which moves within a coil. Its resulting variable inductance provides a continuous (voltage) servo position signal to the controller. This voltage signal is constantly compared to the vehicle speed signal. This comparison determines if the pulses issued have corrected the speed error or if additional pulses are required. This comparison is also used to lengthen the average pulse when it is not enough to compensate for the speed error, such as a steep grade.

The servo will go into an open vent valve position under the following conditions:

- When the brake (or clutch) pedal is depressed.
- An open variable inductance position sensor coil in the servo.
- A loss of electrical power to the system (such as turning the cruise switch off.)
- The ignition is turned off.

VACUUM SUPPLY (R/V MODELS)

The vacuum supply to operate the cruise control system is routed to the servo. This can be done by routing manifold vacuum straight to the servo or from manifold through a vacuum storage tank.

ELECTRICAL AND VACUUM RELEASE SWITCHES (R/V & P-MOTORHOME)

These switches are used to disengage the cruise control system. An electrical release switch mounted on the brake pedal bracket (and clutch pedal bracket on vehicles equipped with manual transmission) disengages the system electrically when the brake (or clutch) pedal is depressed. This is done by interrupting the flow of current to the controller. A vacuum release valve (R/V models only), mounted on the brake pedal bracket vents the trapped vacuum in the servo to atmosphere when the brake pedal is depressed, allowing the servo unit to more quickly return the throttle to idle position. This is done by routing a separate hose directly to the servo from the normally closed vacuum switch. These two types of switches will sometimes be combined with stop light switch, TCC switch, etc. Refer to AUTOMATIC TRANSMISSION (SEC. 7A).

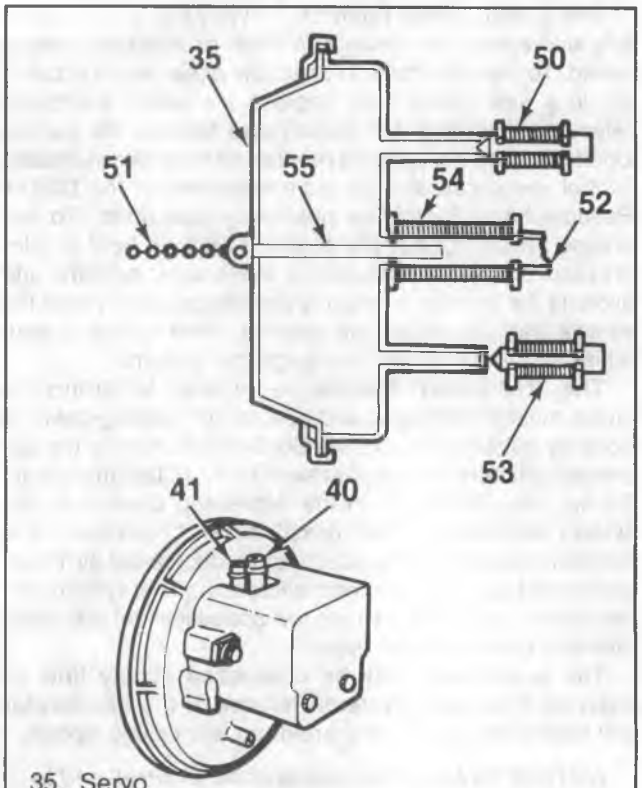

35. Servo
40. Valve (To Vacuum Supply)
41. Valve (To Vacuum Brake Release Valve)
50. Vacuum Solenoid and Valve (Normally Closed)
51. Throttle Attachment
52. Variable Inductance Position Sensor
53. Vent Solenoid and Valve (Normally Opened)
54. Coil
55. Steel Core

F-02427

Figure 4—Servo Unit

DIAGNOSIS OF CRUISE CONTROL SYSTEM

Problems can be either mechanical, electrical and/or vacuum. In resolving any cruise system operating problem, first complete the following initial inspection.

INITIAL INSPECTION

- Check for bare, broken, or disconnected wires.
- Check for pinched, damaged, or disconnected vacuum hoses.
- Make sure servo and throttle linkages operate freely and smoothly.
- Check "ALTERNATOR" 20 amp fuse.
- Verify check valve functions correctly.

If preliminary inspection reveals no solution, follow the six diagnostic charts, (figures 5 through 17) to isolate and fix the problem. Figure 17 has also been provided as supplementary information on what the controller, servo, and control switch voltages and resistances are when the system is operating correctly. These charts are helpful in isolating electrical problems.

A quick-check box is made available through Kent-Moore Tool Company under tool number J-34185 (or equivalent). This quick-check box will plug in place of the controller (R/V models only) and determine which part of the system has a problem. Instructions on the operation of this tool are provided with the tool. For diagnosis of the stepper motor cruise control system, no quick-check tool is necessary. Only standard shop tools are required for diagnosis.

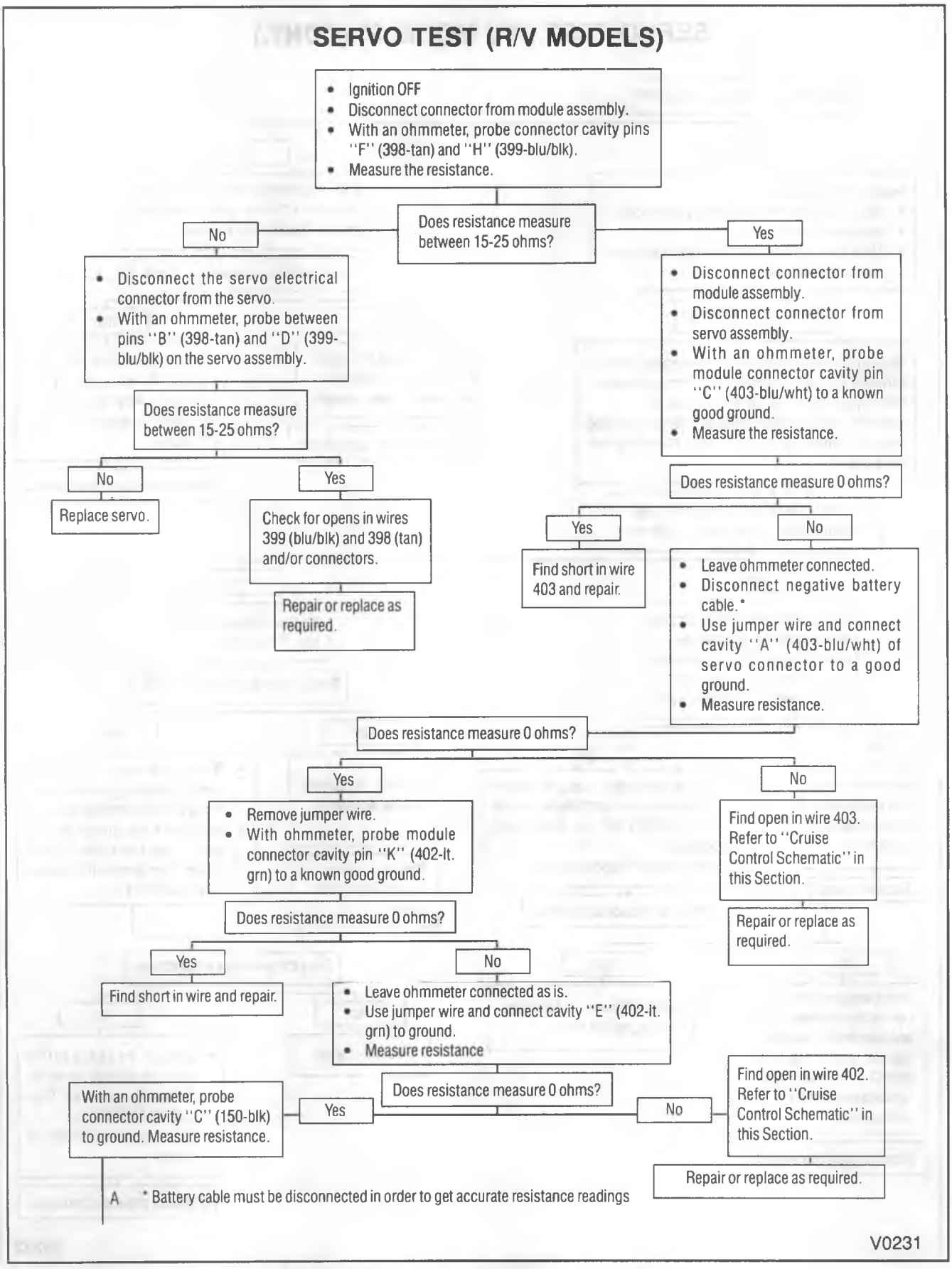

Figure 5—Cruise Control Diagnostic Chart #1 (R/V Models)

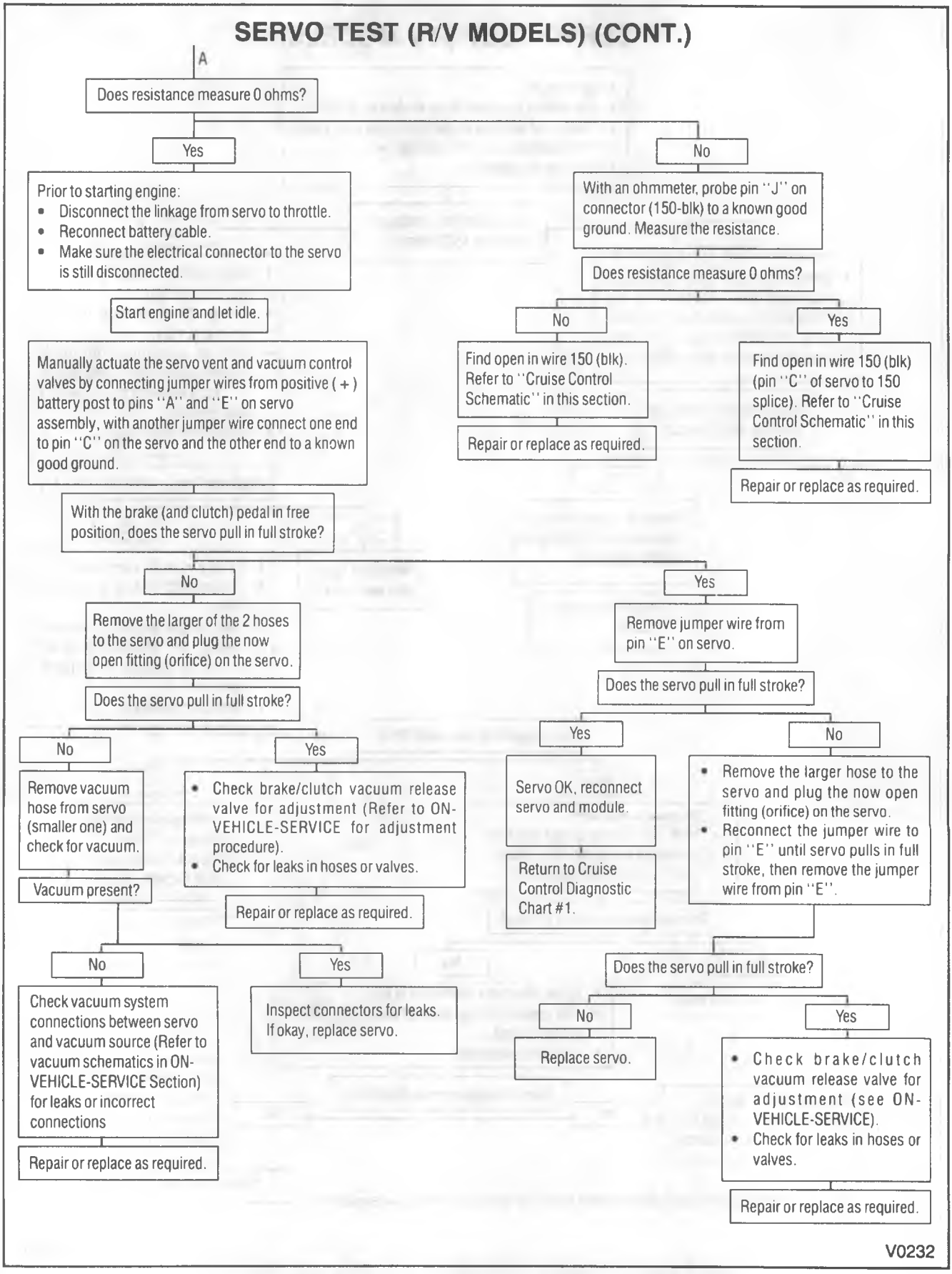

Figure 6—Cruise Control Diagnostic Chart #2 (R/V Models)

CRUISE "OFF/ON/RESUME/ACCEL" SWITCH TEST

PART I

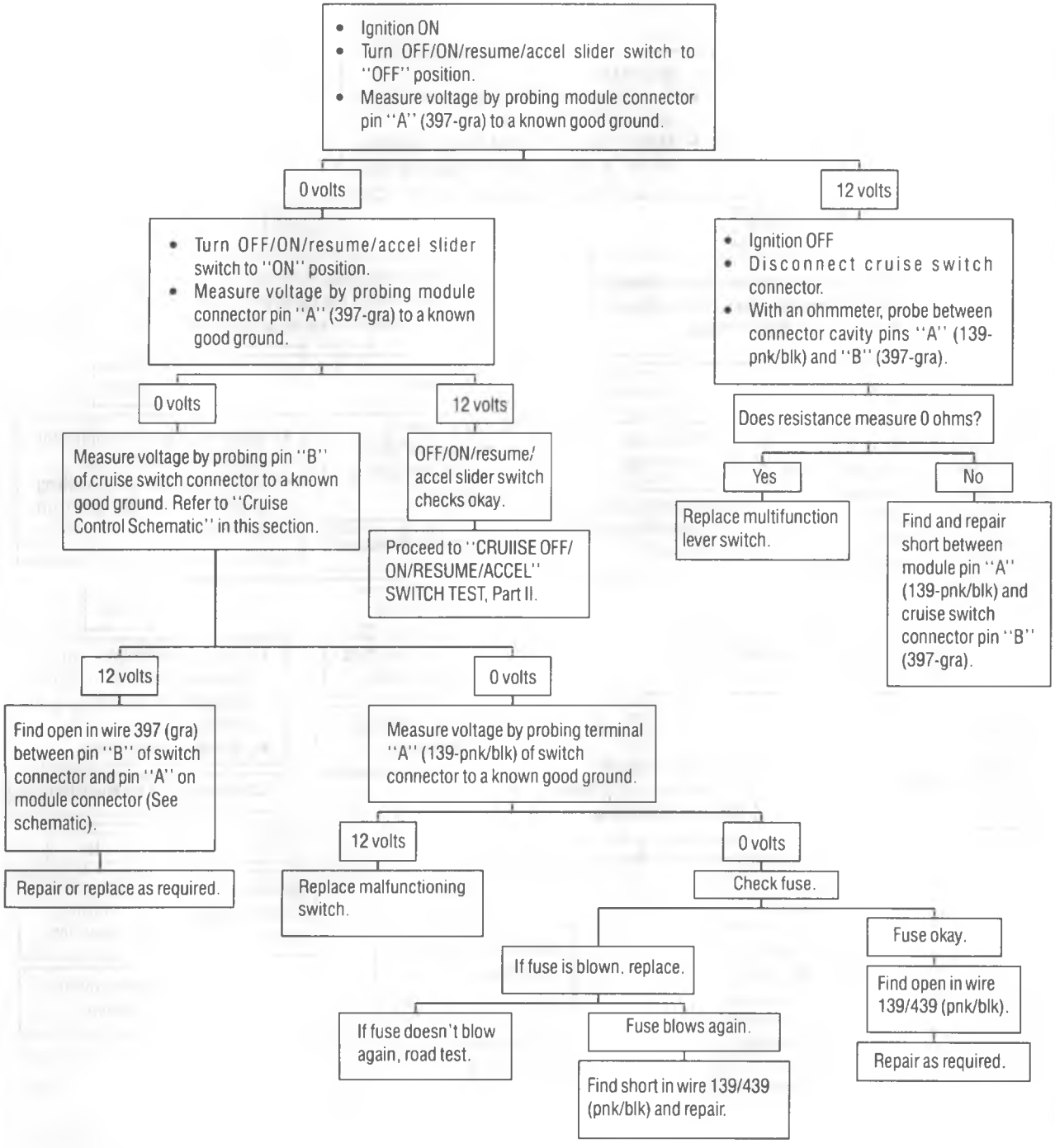

Figure 7—Cruise Control Diagnostic Chart #3 (R/V Models)

CRUISE "OFF/ON/RESUME/ACCEL" SWITCH TEST

PART II

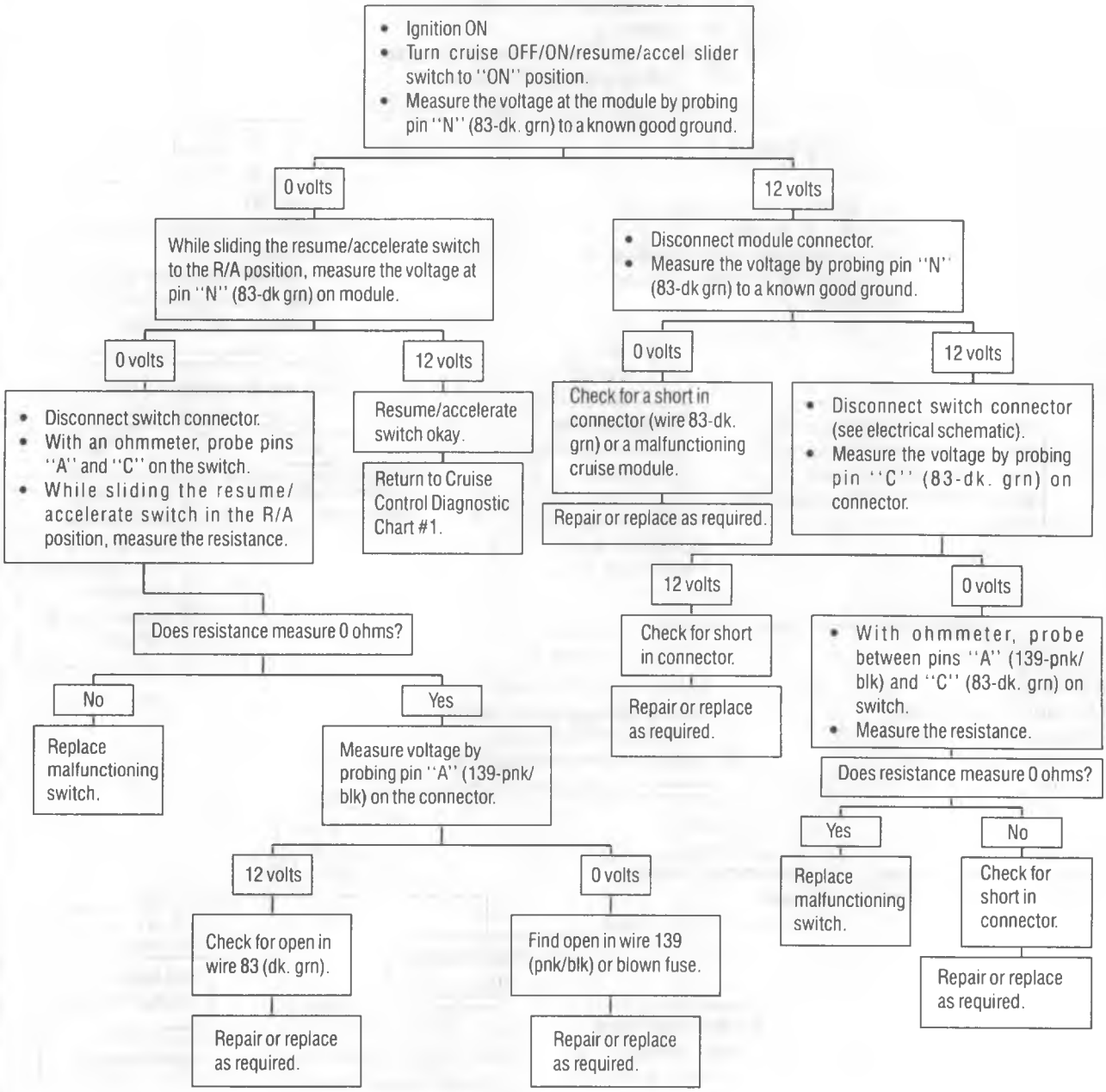

Figure 8—Cruise Control Diagnostic Chart #4 (R/V Models)

CRUISE RELEASE SWITCH TEST

(Automatic Trans. Only)

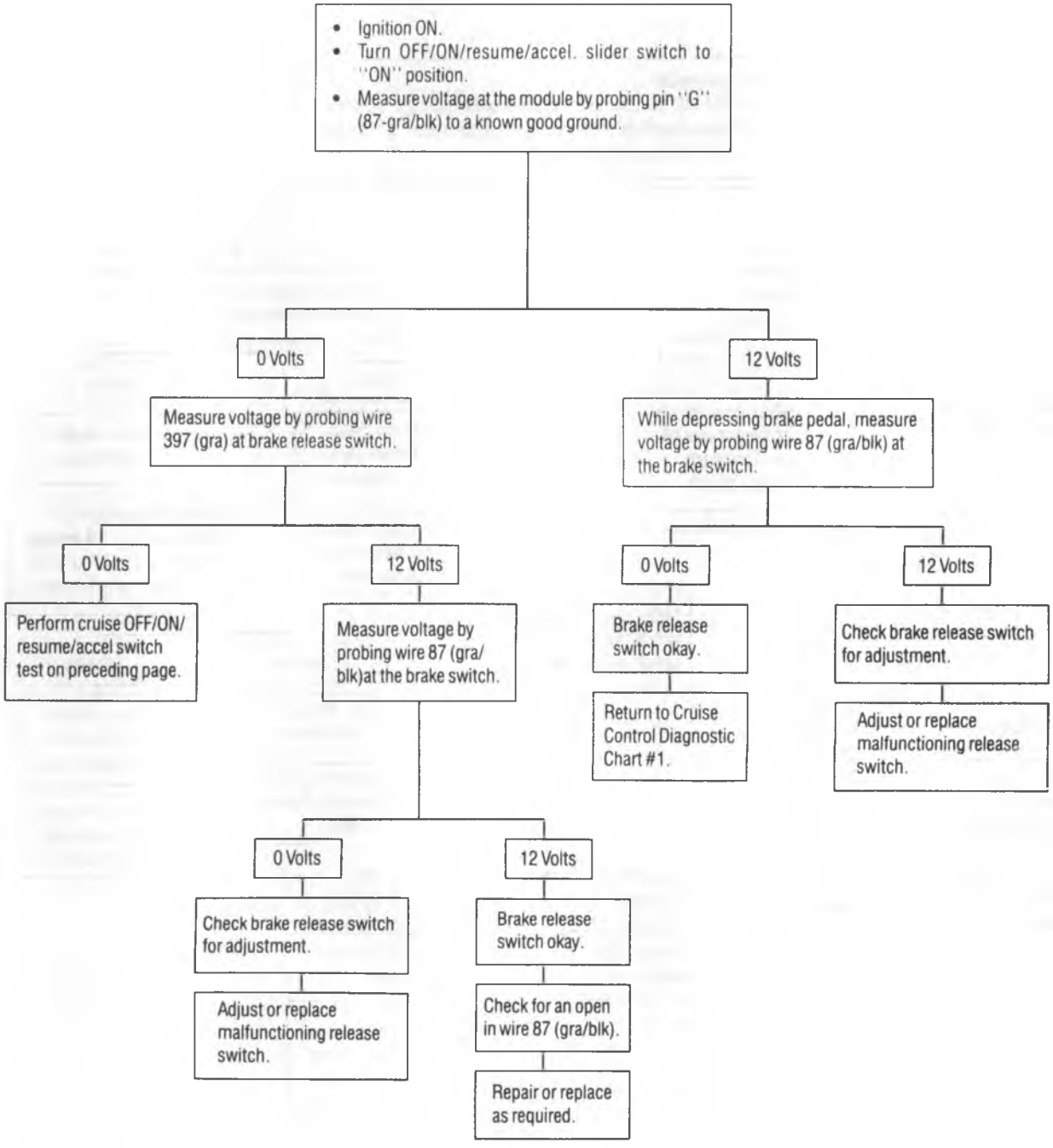

F6847

Figure 9—Cruise Control Diagnostic Chart #5 (R/V Models)

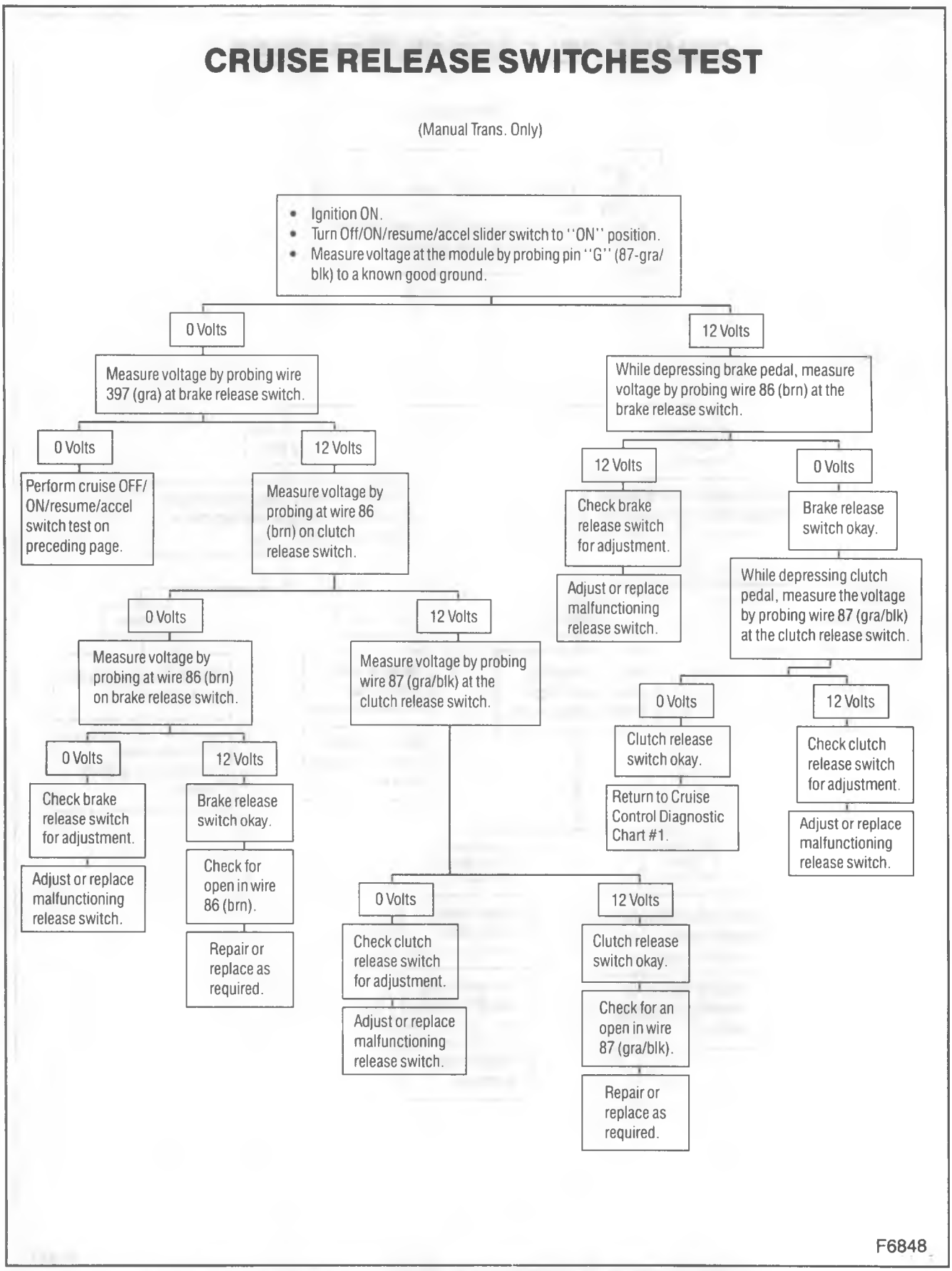

Figure 10—Cruise Control Diagnostic Chart #6 (R/V Models)

CRUISE SET/COAST SWITCH TEST

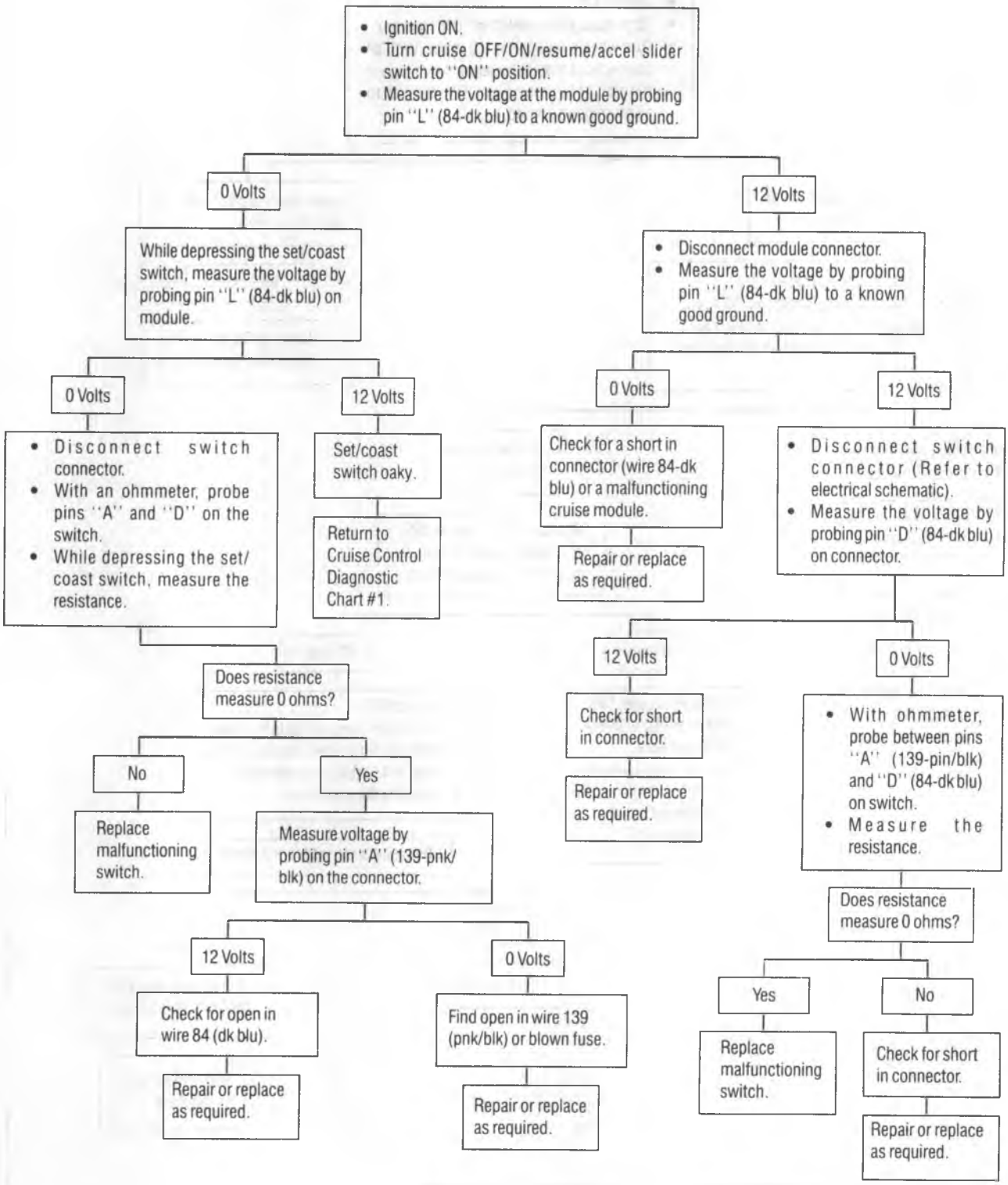

Figure 11—Cruise Control Diagnostic Chart #7 (R/V Models)

SPEED SENDER TEST

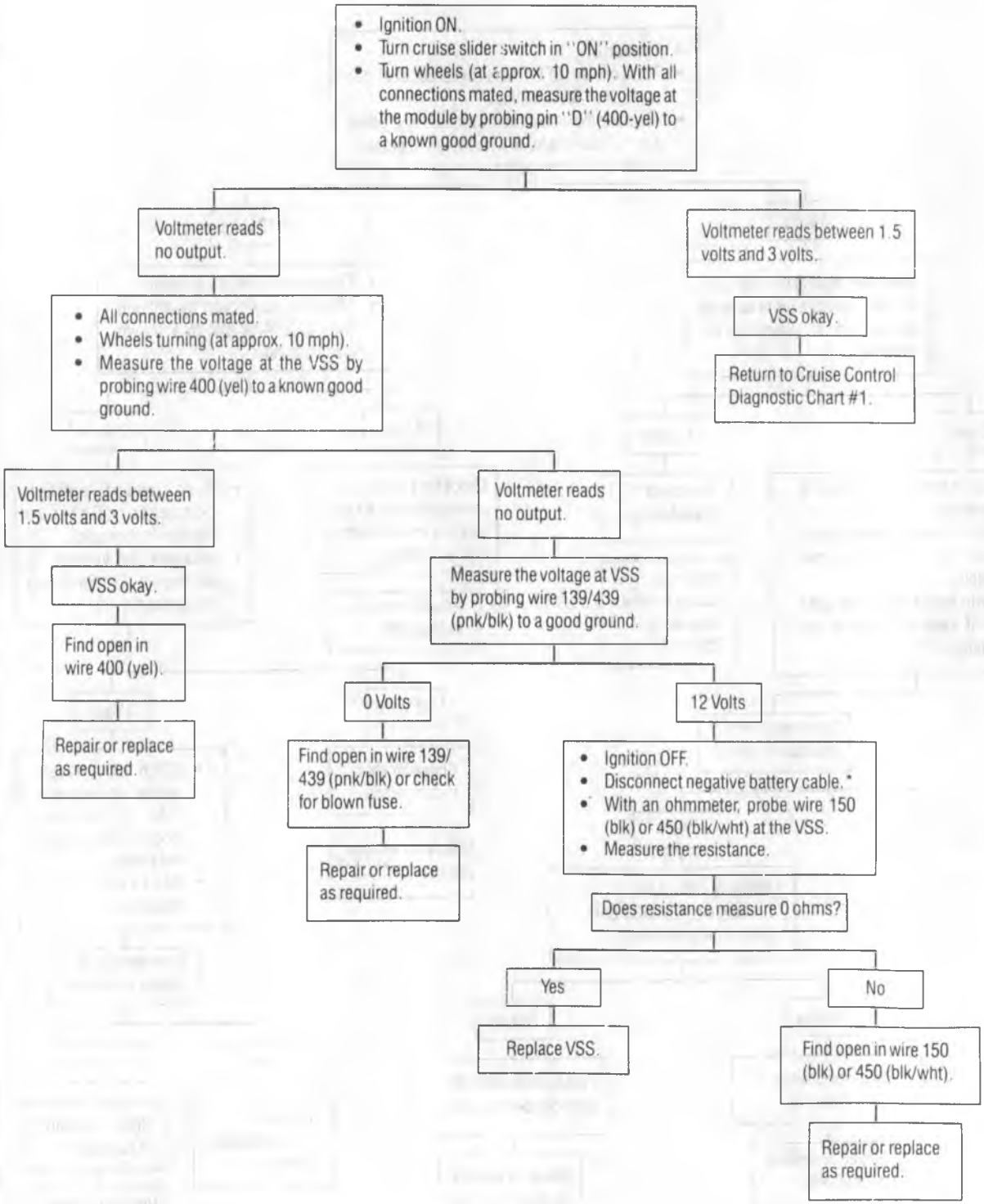

*Negative battery cable must be disconnected for an accurate resistance reading.

F6850

Figure 12—Cruise Control Diagnostic Chart #8

CRUISE CONTROL DIAGNOSIS (P MODELS)

A HIGH IMPEDANCE DIGITAL VOLTMETER
IS NEEDED TO PERFORM THE FOLLOWING TESTS.

TROUBLESHOOTING HINTS

1. Cruise fuse (labeled alternator in fuse block) is OK if seat belt buzzer is working.
2. Check Cruise Module connector C110 for proper connection.
3. Check that cruise module linkage is connected and moving freely.
4. Check cruise cable adjustment.

Step 1 — **Checks for an open in cruise power circuit**

- Ignition off.
- Disconnect connector C110 from cruise module.
- Ignition on.
- Measure voltage at terminal F of C110 to a good ground.

NOTES
1. Never attempt to back probe a sealed connector.
2. Never attempt to insert meter leads into terminal slots.

12 VOLTS → Step 2

0 VOLTS →

THINGS TO CHECK
1. Check "Alternator" fuse.
2. Check PNK/BLK wire (39) for open.
3. Check connector G1 at Bulkhead (Engine to I.P.) for contaminants (dirt) and for proper contact.

Step 2 — **Checks for resistance of cruise system ground wire**

- With ohmmeter, measure resistance of BLK wire (150) from terminal E of C110 to engine block ground stud.

RESISTANCE LESS THAN 1 OHM → Step 3

RESISTANCE GREATER THAN 1 OHM →

THINGS TO CHECK
1. Check engine block ground stud for a clean and tight connection.
2. Check condition of BLK wire (150) from terminal E of C110 to engine block ground stud.

Step 3 — **Checks for a short in cruise wiring harness**

- Measure voltage at terminals A, B, C, and D of C110 to ground with cruise slider switch "OFF" and ignition on.

0 VOLTS AT ALL TERMINALS → *TO STEP 4*

12 VOLTS AT ONE OR MORE TERMINALS →

Step 4 — **Checks for a short in cruise control lever**

- Measure voltage at terminals B and C of C110 to ground with cruise slider switch "ON" and ignition switch on.

0 VOLTS AT B AND C → Step 5

12 VOLTS AT B OR C → REPLACE CRUISE CONTROL LEVER

THINGS TO CHECK
1. Disconnect connector C550. Measure voltage again at terminals A, B, C, and D of connector C110.
   - If all terminals read zero volts, replace cruise control lever.
   - If one or more terminals read 12 volts, problem is in wiring harness.

Step 5 — **Checks for an open in "BRAKE" circuit or "ON/OFF" circuit**

- Measure voltage at terminals A and D of C110 to ground with cruise slider switch "ON" and ignition switch on.

12 VOLTS AT A AND D → *TO STEP 6*

0 VOLTS AT A AND D →

0 VOLTS ONLY AT D →

0 VOLTS ONLY AT A →

THINGS TO CHECK

(0 VOLTS AT A AND/OR D)
1. Check for 12 volts at terminal A of female half of connector C451.
   - If zero volts, check for 12V at PNK/BLK wire of C108.
2. Check continuity between terminals A and B of male half of C550 with cruise switch "ON".
   - If open, replace cruise control lever.
3. Check continuity C451 to C450 grey.
4. Check for open in GRA wire (397B). Column or engine harness.

(0 VOLTS ONLY AT D)
1. Check for open or mis-adjusted brake switches or clutch switch.
2. Check for open in brake/clutch switch wiring to terminal D of C110.

(0 VOLTS ONLY AT A)
1. Check for an open in GRA wire (397A).

GMTB-3128-2A

Figure 13—Cruise Control Diagnostic Chart #9 (P-Motorhome Models)

Step 6 Checks for an open in "SET/COAST" circuit

- Ignition on.
- Move cruise slider switch to "ON".
- Push cruise "SET" push button in and hold.
- Measure voltage at terminal B of C110 to ground.

12 VOLTS

0 VOLTS

Step 7 Checks for an open in "RESUME/ACCEL (R/A)" circuit

- Hold cruise slider switch in "R/A" position.
- Measure voltage at terminal C of C110 to ground.

THINGS TO CHECK

1. Disconnect connector C550 and check continuity between terminals B and D of male half with "SET" push button depressed.
   - If open, replace cruise control lever.
2. Check for open in DK BLU wire (84).

12 VOLTS

0 VOLTS

Step 8 Checks for an open or short in vehicle speed circuit

- Put voltmeter on DC voltage scale.
- Connect voltmeter across pins F and K of connector C110.
- Ignition on, raise vehicle, put transmission in neutral.
- Spin drive wheels by hand.

THINGS TO CHECK

1. Disconnect C550 and check continuity between terminals A and C of male half with cruise switch in "R/A" position.
   - If open, replace cruise control lever.
2. Check for open in DK GRN wire (83).

VOLTAGE VARYING BETWEEN 0 AND 12 VOLTS

0 VOLTS

12 VOLTS

RECONNECT CRUISE MODULE CONNECTOR C110

STEP 8 — THINGS TO CHECK

TO STEP 9

STEP 8 — THINGS TO CHECK

0 VOLTS

1. Check for open on DRK GREEN wires (389).

12 VOLTS

1. Check for short to ground on DRK GRN wires (389).

If wires are OK see electrical section of Division Service Manual for additional speed sensor diagnostics.

Step 9 Checks for operation of cruise control module

- Start engine.
- Move cruise slider switch to "OFF".
- Move cruise switch to "ON" and then wait at least 3 seconds before doing next step.
- *Fully* depress and hold brake pedal.
- Push cruise "SET" push button in and hold.
- Hold cruise slider switch in "R/A" position.
- After 10 seconds, release brake pedal while still holding "R/A" and "SET" switches and listen for momentary engine RPM increase.

ENGINE RPM INCREASE

CRUISE MODULE IS OK

THINGS TO CHECK

1. Problem is intermittent.
   - Check connectors and wire terminals for contaminants (oil, grease, dirt) and for proper contact.
   - Also check ground terminals for contaminants and proper contact.

(see ground check below)

NO ENGINE RPM INCREASE

THINGS TO CHECK

1. Check that cruise module linkage is connected and operating freely.
2. Check linkage adjustment.
3. Check terminals in connectors C110, C450, C451, and C550 for contaminants (oil, grease, dirt) and for proper contact. (see ground check below)
   - If OK replace cruise control module.

"GOOD GROUND" CHECK

A. Turn ignition on, move cruise slider switch to "ON" position. Perform voltage check between suspected bad cruise ground and engine block. Any voltage means ground is bad.

B. If step "A" fails to locate problem, run a second ground wire from engine block to pin E of cruise module. If second wire corrects problem, then recheck ground path (150) for problem. (Remove second wire after troubleshooting is completed.)

GMTB-3129-2A

Figure 14—Cruise Control Diagnostic Chart #9 (Cont.) (P-Motorhome Models)

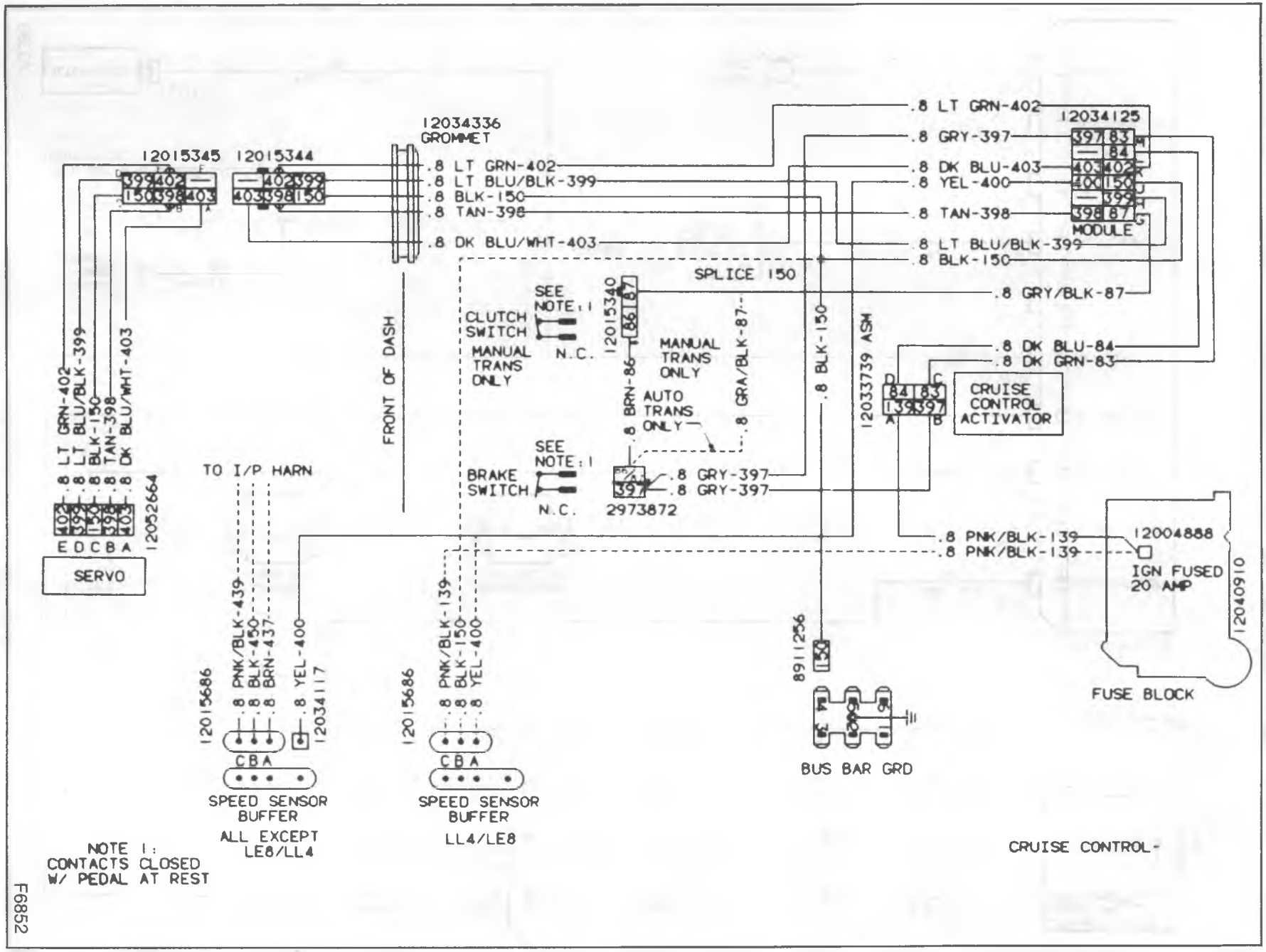

Figure 15—R/V Models Cruise Control Schematic

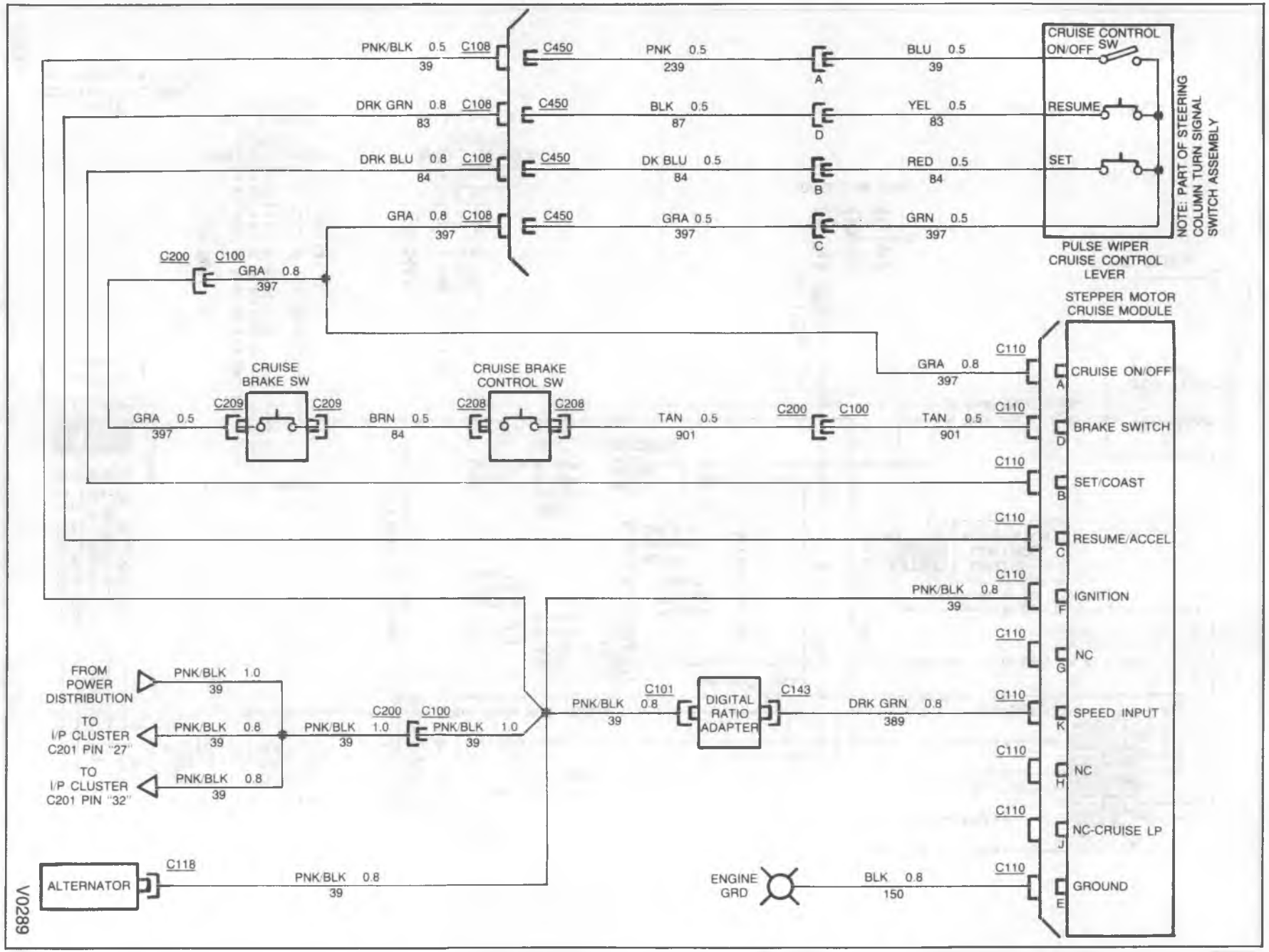

Figure 16—P-Motorhome Cruise Control Schematic

CONTROL SWITCH
CONTINUNITY CHECK

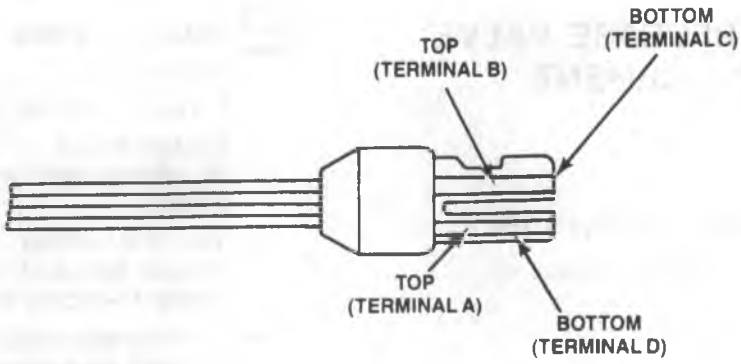

C-CLOSED
O-OPEN

SET/COAST (S/C) SW	POSITION SLIDER	C-B	C-D	C-A	B-D	B-A	D-A
NORMAL	OFF	O	O	O	O	O	O
NORMAL	ON	O	O	O	O	C	O
NORMAL	R/A	C	O	C	O	C	O
DEPRESSED	OFF	O	O	O	C	O	O
DEPRESSED	ON	O	O	O	C	C	C
DEPRESSED	R/A	C	C	C	C	C	C

CRUISE CONTROLLER (MODULE) CHECKS AT CONNECTOR
- IGNITION ON
- CONTROLLER DISCONNECTED

PIN	FUNCTION	VOLTAGE TO GND	RESISTANCE	CONDITIONS
G	BRAKE/CLUTCH INPUT	12V	-	BRAKE (AND CLUTCH) NOT DEPRESSED
		0V	-	BRAKE (AND/OR CLUTCH) DEPESSED
L	SET/COAST	12V	-	SLIDER SWITCH "ON" - SET/COAST DEPRESSED
		0V	-	SLIDER SWITCH "ON" - SET/COAST NORMAL
		0V	-	SLIDER SWITCH "OFF" - SET/COAST NORMAL
M	RESUME/ ACCEL. INPUT	12V	-	SLIDER SWITCH "R/A" POSITION
		0V	-	SLIDER SWITCH "ON" - SET/COAST DEPRESSED OR NORMAL
		0V	-	SLIDER SWITCH "OFF" - SET/COAST DEPRESSED OR NORMAL
J	GROUND	-	0 Ω	MEASURED TO VEHICLE GROUND
A	ON/OFF INPUT	12V	-	SLIDER SWITCH "ON"
		0V	-	SLIDER SWITCH "OFF" - SET/COAST DEPRESSED OR NORMAL
B	INDICATOR LAMP	12V	-	CRUISE ARMED
F	SPS HIGH	-	15-25 Ω	MEASURED BETWEEN PINS F & H - SERVO CONNECTED
H	SPS LOW	-	∞ Ω	MEASURED BETWEEN PINS F & H - SERVO DISCONNECTED
D	SPEED SIGNAL			SEE SPEED SENDER TEST CHART
K	VACUUM VALVE CONTROL	-	30-55 Ω	MEASURED TO GROUND - SERVO CONNECTED
		-	∞ Ω	MEASURED TO GROUND - SERVO NOT CONNECTED
C	VENT VALVE CONTROL	-	30-55 Ω	MEASURED TO GROUND - SERVO CONNECTED
		-	∞ Ω	MEASURED TO GROUND - SERVO NOT CONNECTED

SERVO CHECKS
- SERVO CONNECTOR DISCONNECTED
- MEASURE AT SERVO PINS

PIN	FUNCTION	RESISTANCE	CONDITIONS
D	SPS HIGH	15-25	MEASURED BETWEEN PINS D AND B
B	SPS LOW	-	(IF MEASURED RESISTANCE IS NOT STATED VALVE, REPLACE SERVO)
A	VENT VALVE	30-55	MEASURED BETWEEN PINS A AND C
			(IF MEASURED RESISTANCE IS NOT STATED VALVE, REPLACE SERVO)
E	VACUUM VALVE	30-55	MEASURED BETWEEN PINS E AND C
			(IF MEASURED RESISTANCE IS NOT STATED VALVE, REPLACE SERVO)

F6708

Figure 17—Controller, Servo and Control Switch Check (R/V Models)

CRUISE CONTROL ON-VEHICLE SERVICE

VACUUM RELEASE VALVE REPLACEMENT

R/V MODELS

Remove or Disconnect (Figure 18)

1. Instrument panel harness connector (8).
2. Vacuum lines (10).
3. Retainer (12).
   - Turn the retainer counterclockwise to unseat it.
4. Vacuum release valve (9) or (11).

Install or Connect (Figure 18)

1. Retainer (12).
   - Turn the retainer clockwise to seat it.
2. Vacuum release valve (9 or 11) until it is seated on the retainer, with the brake pedal in the depressed position.
   - Note that audible "clicks" can be heard as the threaded portion of the valve is pushed through the retainer toward the brake pedal.
   - Pull the brake pedal fully rearward against the pedal stop, until the audible "click" sounds can no longer be heard.
   - Release the brake pedal and repeat step 2 to assure that no audible "click" sounds remain.
3. Vacuum lines (10).
4. Instrument panel harness connector (8).

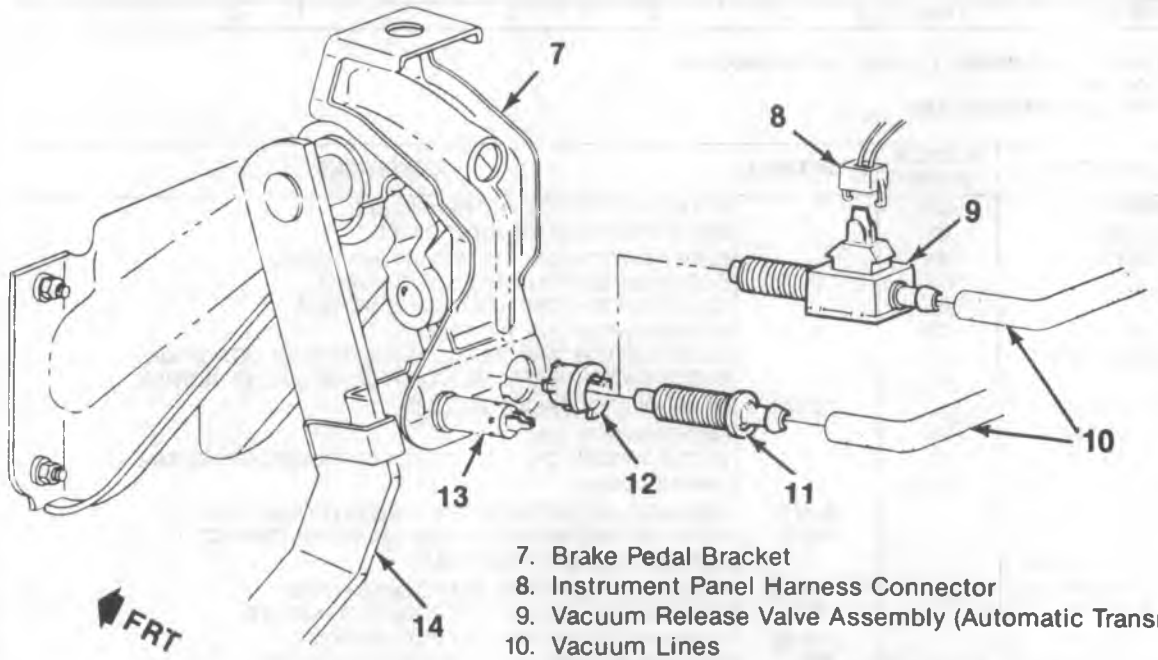

7. Brake Pedal Bracket
8. Instrument Panel Harness Connector
9. Vacuum Release Valve Assembly (Automatic Transmission)
10. Vacuum Lines
11. Vacuum Release Valve Assembly (Manual Transmission)
12. Retainer
13. Stop Lamp Switch
14. Brake Pedal

F-02435

Figure 18—Vacuum Release Switch (R/V Models)

CLUTCH RELEASE SWITCH REPLACEMENT

R/V MODELS

Remove or Disconnect (Figure 19)

1. Connector (98).
2. Retainer (102).
   - Turn the retainer counterclockwise to unseat it.
3. Clutch release switch (99).

Install or Connect (Figure 19)

1. Retainer (102).
   - Line up the notches on the clutch pedal bracket (101) to the retainer.
2. Clutch release switch (99) until it is seated on the retainer, with the brake pedal in the depressed position.
   - Note that audible "clicks" can be heard as the threaded portion of the valve is pushed through the retainer toward the clutch pedal.
   - Pull the clutch pedal fully rearward against the pedal stop, until the audible "click" sounds can no longer be heard.
   - Release the clutch pedal and repeat step 2 to assure that no audible "click" sounds remain.
3. Connector (98).

BRAKE RELEASE SWITCH REPLACEMENT

R/V MODELS

- Refer to HYDRAULIC BRAKES (SEC. 5A) for replacement procedures.

P-MODELS

Remove or Disconnect

1. Connector.
2. Forward adjusting nut.
3. Switch.

Install or Connect

1. Switch into bracket.
2. Forward adjusting nut.

Adjust

- Adjust switch so plunger will depress 2.84 mm (0.11 inches) when pedal is released.

3. Connector

CRUISE CONTROL MODULE REPLACEMENT

R/V MODELS

Remove or Disconnect (Figure 20)

1. Harness connector (120).
2. Module assembly (116) by prying back the retaining clip on the bracket and sliding the module out.

Install or Connect (Figure 20)

1. Module assembly (116).
2. Harness connector (120).

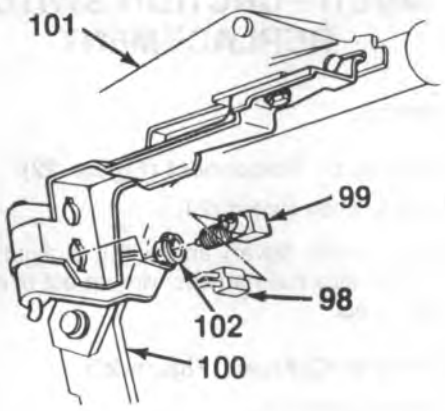

98. Connector
99. Clutch Release Switch
100. Clutch
101. Brake Pedal Bracket
102. Retainer

V0033

Figure 19—Clutch Release Switch (R/V Models)

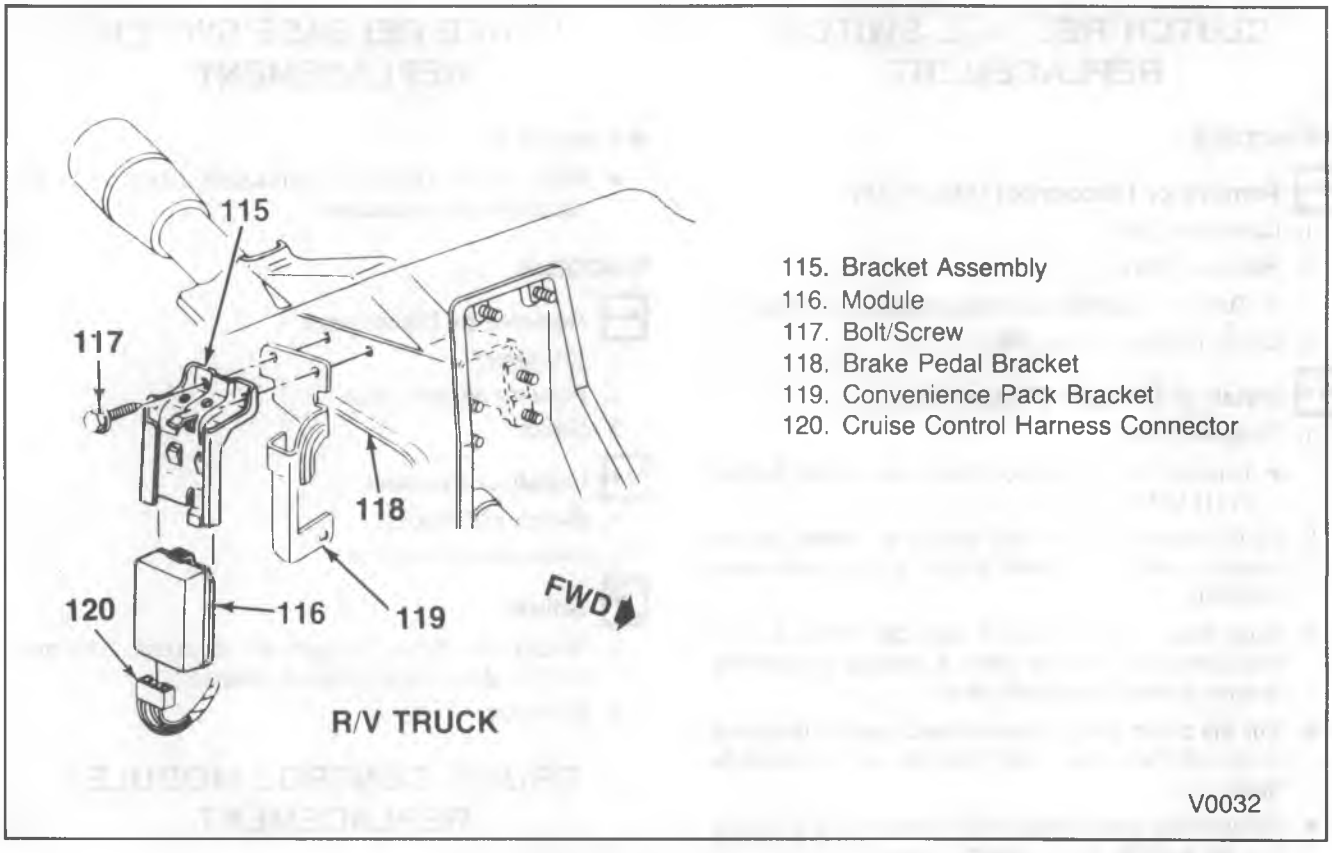

Figure 20—Controller Module Mounting

STEPPER MOTOR (MODULE) REPLACEMENT AND ADJUSTMENT

P-MOTORHOME

Remove or Disconnect (Figure 21)

1. Retainer (123).
2. End fitting (128) from stud (122).
3. Cable adjuster (121) from engine bracket (127).
   - Unlock adjuster (view A). Squeeze tabs together and remove from bracket.
4. Nut (126), washer (125).
5. Cable off stud (129).
6. Harness connector (120).
7. Stepper motor (116).

Install or Connect (Figure 21)

1. Stepper motor (116).
2. Cable onto stud (120).
3. Washer (125) and nut (126).
   - Hand tighten at this time.
4. Cable onto engine bracket (127).
5. Unlock cable conduit (View A).
6. End fitting onto stud (122).
7. Retainer (123).
8. Lock cable conduit (View B).

NOTICE: See "Notice" on page 9-1 of this section.

Tighten

9. Nut (126) to 3 N•m (27 in. lbs.).

MULTI-FUNCTION SWITCH REPLACEMENT

R/V MODELS

Remove or Disconnect (Figure 22)

1. Multi-function switch (24).
   - Grasp switch (lever) and pull it straight out of the pivot. Gently pull harness wire up out of column and disconnect.

Install or Connect (Figure 22)

1. Harness connector.
   - Feed harness wire into column.
2. Multi-function switch (24).
   - Align notches on switch (lever) with those on the pivot, then snap switch into place.

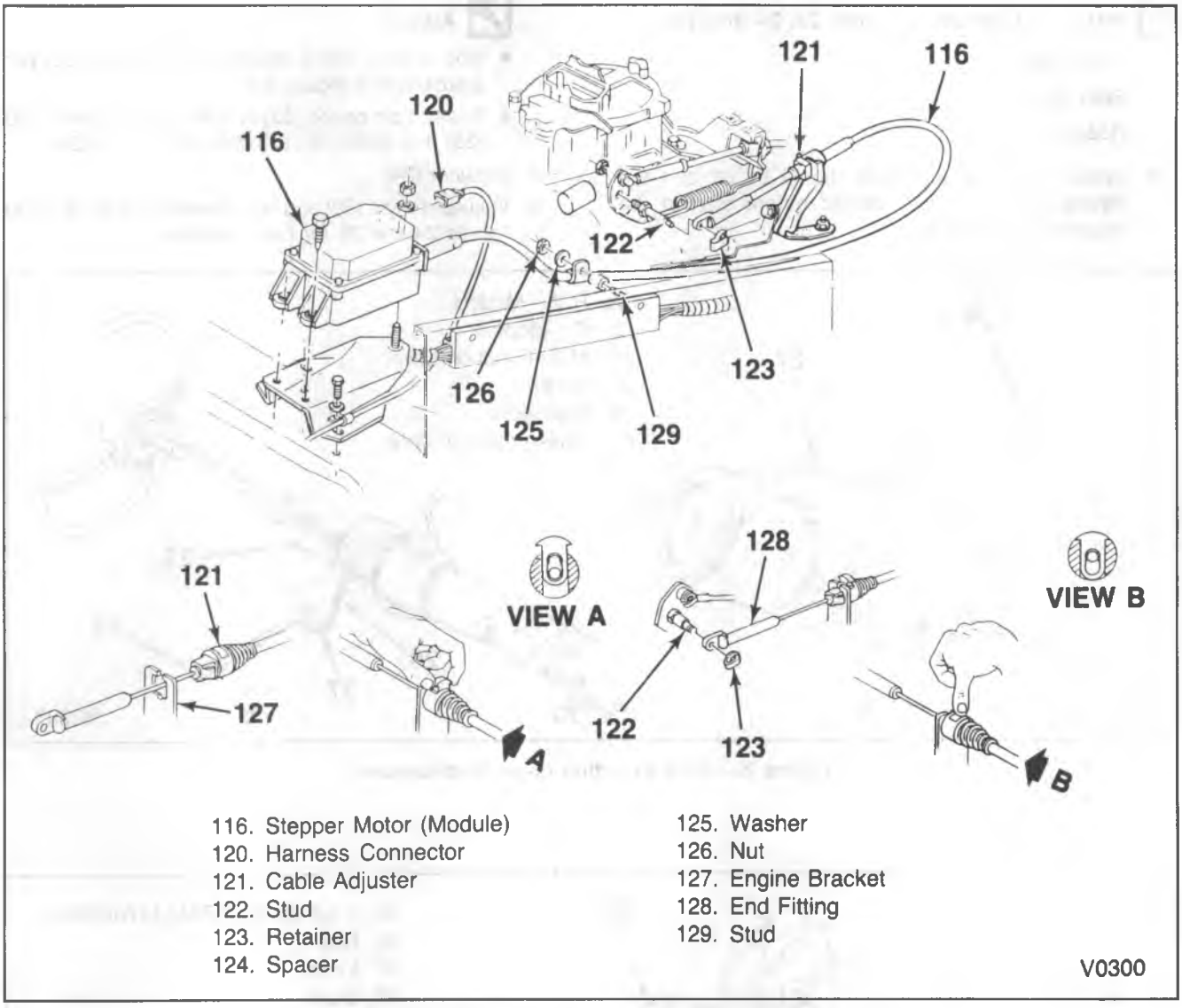

Figure 21—Stepper Motor (Module) (P-Motorhome)

P-MOTORHOMES

Remove or Disconnect (Figure 22)

1. Steering wheel. Refer to STEERING COLUMN — STANDARD, or STEERING COLUMN — TILT (SEC. 3F1 or 3F2).
2. Screw (25).
3. Multi-function switch (24).
4. Harness connector (26).

Install or Connect (Figure 22)

1. Harness connector (26).
2. Multi-function switch (24).
3. Screw (25).
4. Steering wheel. Refer to STEERING COLUMN — STANDARD, or STEERING COLUMN — TILT (SEC. 3F1 or 3F2).

SERVO REPLACEMENT

R/V MODELS

Remove or Disconnect (Figures 23, 24, and 25)

1. Vacuum hoses (39) and hose assembly (49). Refer to Figures 24 and 25 for hose routings.
2. Retainer (34).
3. Rod (33).
4. Bolts (36) and servo (35).

NOTICE: Flexible components (hoses, wires, conduits, etc.) must not be routed within 50 mm (2 inches) of moving parts of the accelerator linkage forward of the servo assembly unless routing is positively controlled.

Install or Connect (Figures 23, 24 and 25)

1. Servo (35).
2. Bolts (36).
3. Rod (33).

- Ignition and fast idle cam should be off and the throttle should be fully closed before starting the adjustment procedure.

Adjust

- Rod (33) so that it assembles over stud (32) per adjustment B (figure 23).
- Position pin on rod (33) in hole closest to the servo (35) that allows for adjustment C (figure 24).

4. Retainer (34).
5. Vacuum hoses (39) and hose assembly (49). Refer to figures 24 and 25 for hose routings.

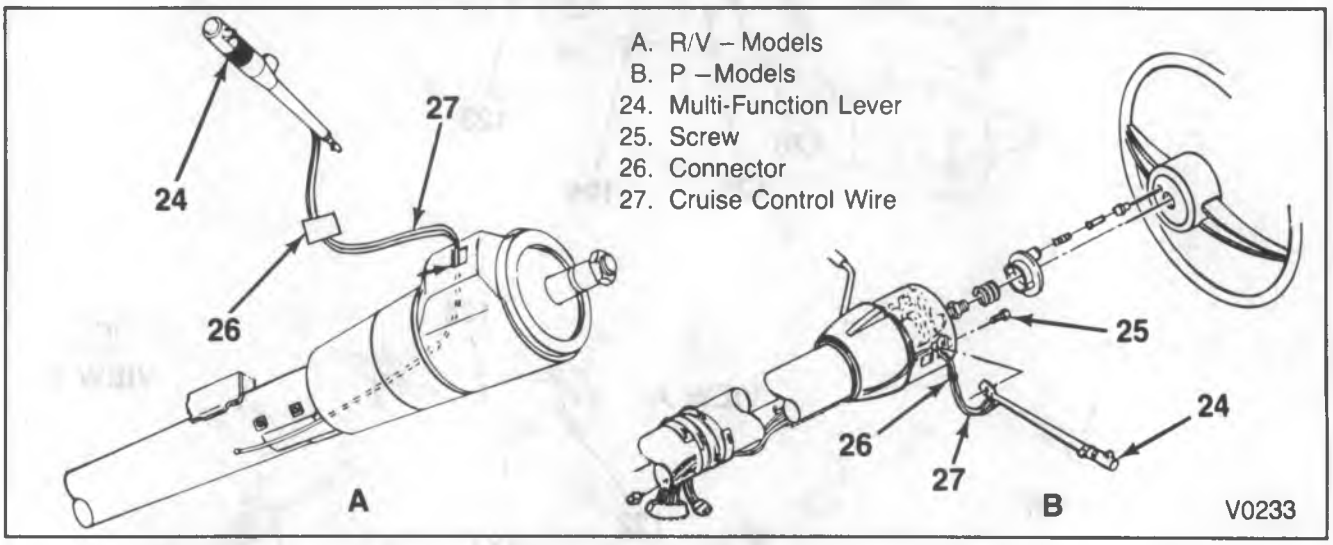

Figure 22—Multi-Function Lever Replacement

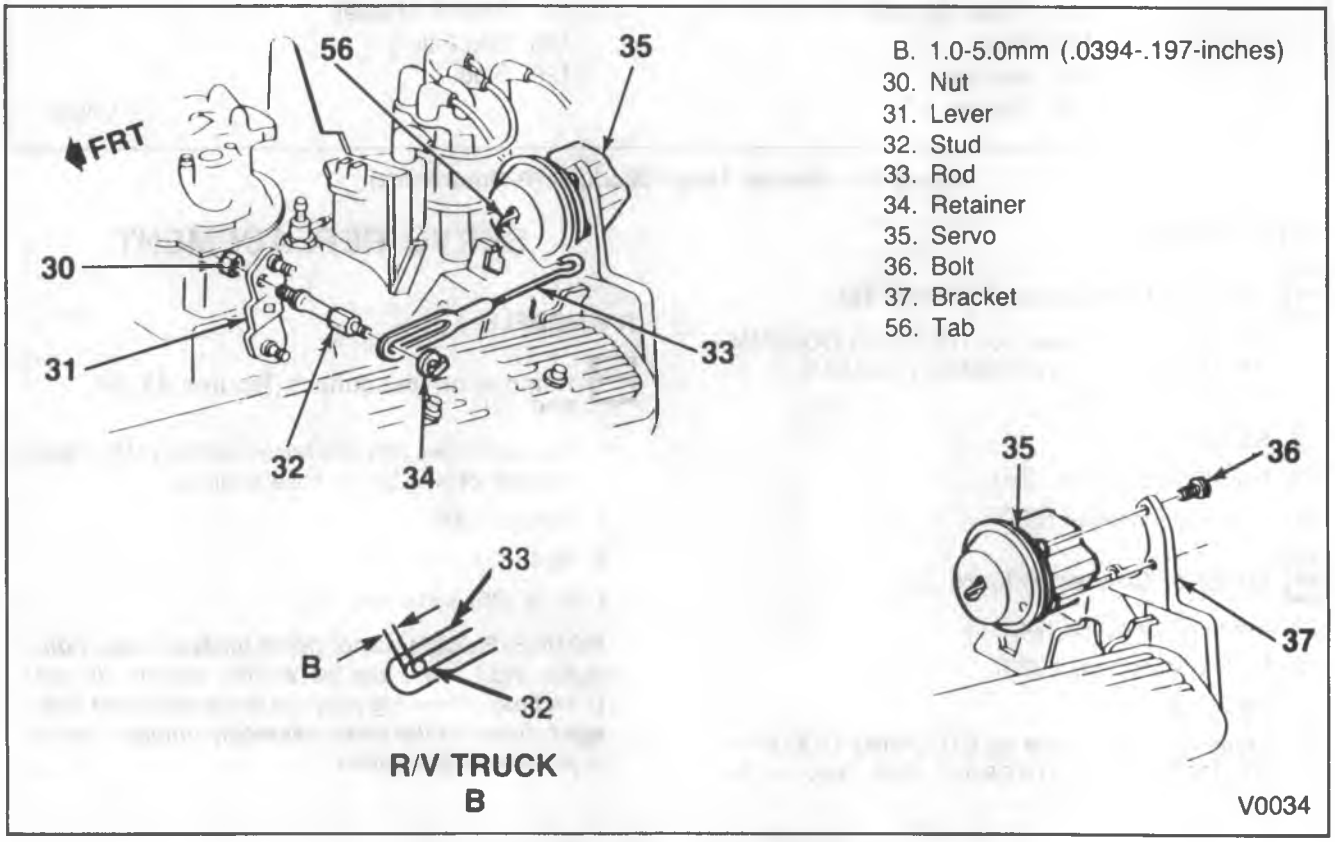

Figure 23—Servo Mounting (Gas Engines)

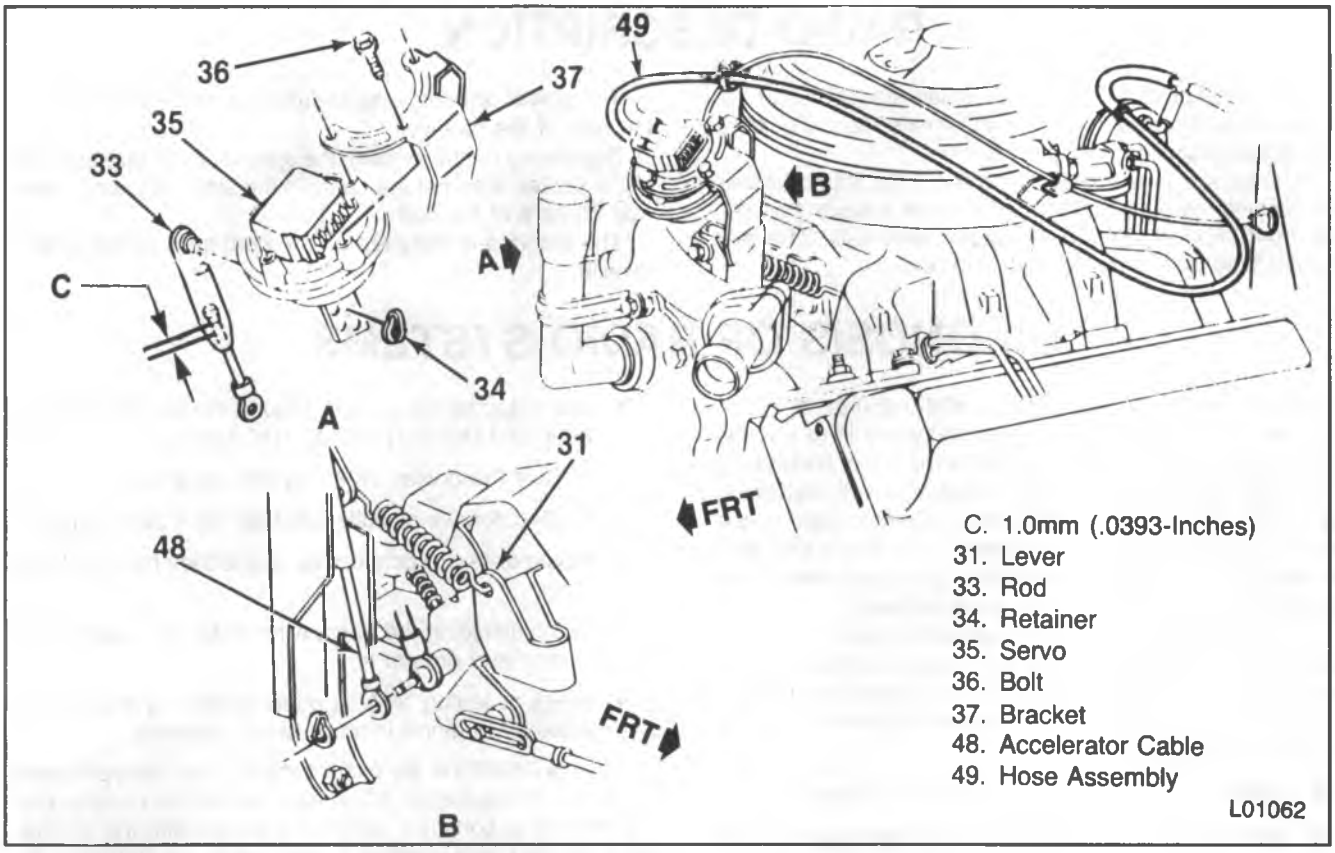

Figure 24—Servo Mounting (R/V 6.2L)

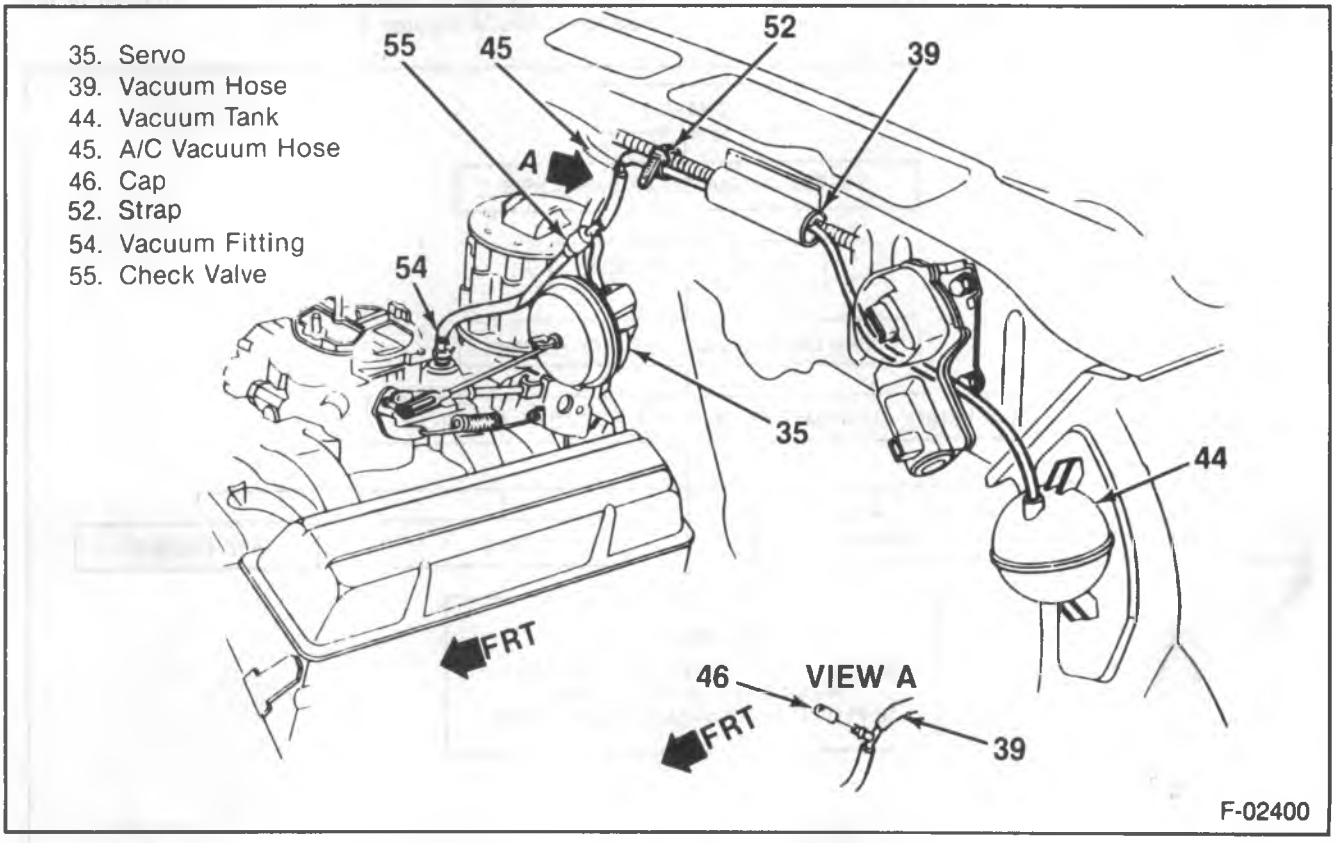

Figure 25—Vacuum Hose Routing (R/V Model 5.0, 5.7 and 7.4L)

RADIO DESCRIPTION

For operation of the factory installed standard and optional radios available, refer to the Owner's Manual or radio supplement supplied with the vehicle.

The receiver is mounted using the front support tubes surrounding the control shafts, and a rear support bracket. The front support tubes are secured with nuts. The rear support bracket is secured with a screw.

The power antenna and speaker harnesses connect to the rear of the receiver.

Depending on the system, the speakers can be mounted at the center or end of the dash, in the side panels or in the rear corners of the cab.

The antenna is mounted on the right front corner of the vehicle.

DIAGNOSIS OF RADIO SYSTEMS

Since radio problems are most often repaired at authorized warranty repair stations, the tendency is to remove the set when a problem is reported, without any preliminary diagnosis. This results in a large number of radios showing up as "NO TROUBLE FOUND" units when received by the warranty repair stations. Many times, when this is the case, the trouble usually could have been corrected without removal of the radio, such as noise complaints.

The inconvenience of driving without a radio, while the set is being serviced at a warranty repair station, can frequently be avoided if the following quick checks are used to eliminate external radio system problems before removing the radio for repair:

- Test the radios outside, with the hood down.
- Most noise can be found on weak "AM" stations near the low frequency and end of the band.
- Ignition noise on FM indicates a possible malfunctioning ignition system.
- If a test antenna is used, ground the base to the car body and DO NOT HOLD THE MAST.
- 90% of the noises enter via the antenna.
- Coated screws or bolts CAN act as a poor ground.
- Most hoses are conductive unless they have a white stripe.
- When shielding the dash, wire, hose, etc., use foil or screen and ground it.
- Weak or fading "AM" is often caused by improperly adjusted antenna trimmer (when present).

Always determine the exact nature of the radio problem as an aid to diagnosis. Knowing whether the condition is intermittent or constant, whether it occurs with the engine off or running, and whether it occurs with car stationary or moving, will help to pinpoint the problem. Use Chart 1 (figure 26) to isolate radio problems, then proceed to the diagnostic charts (figures 27 through 35).

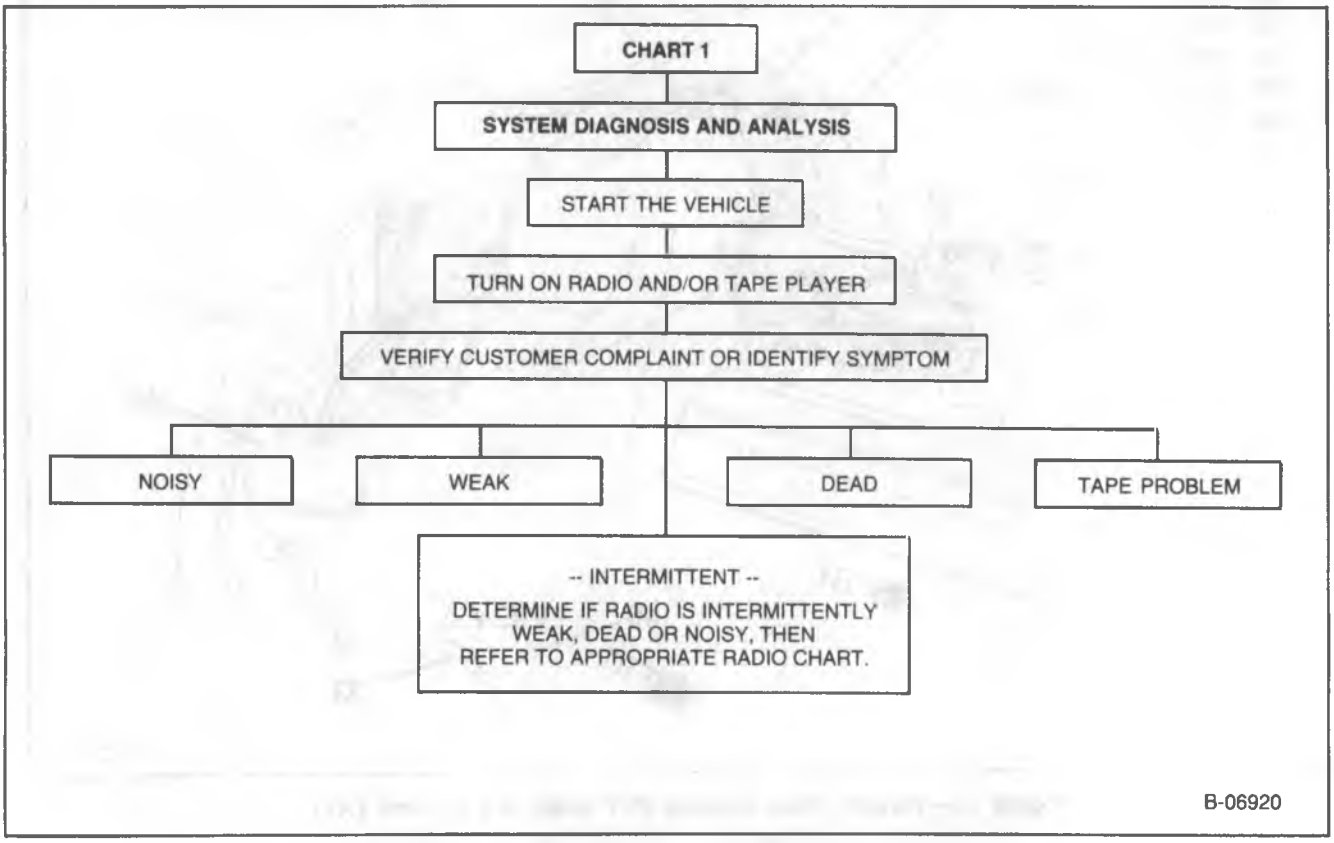

Figure 26—Chart 1 (System Diagnosis and Analysis)

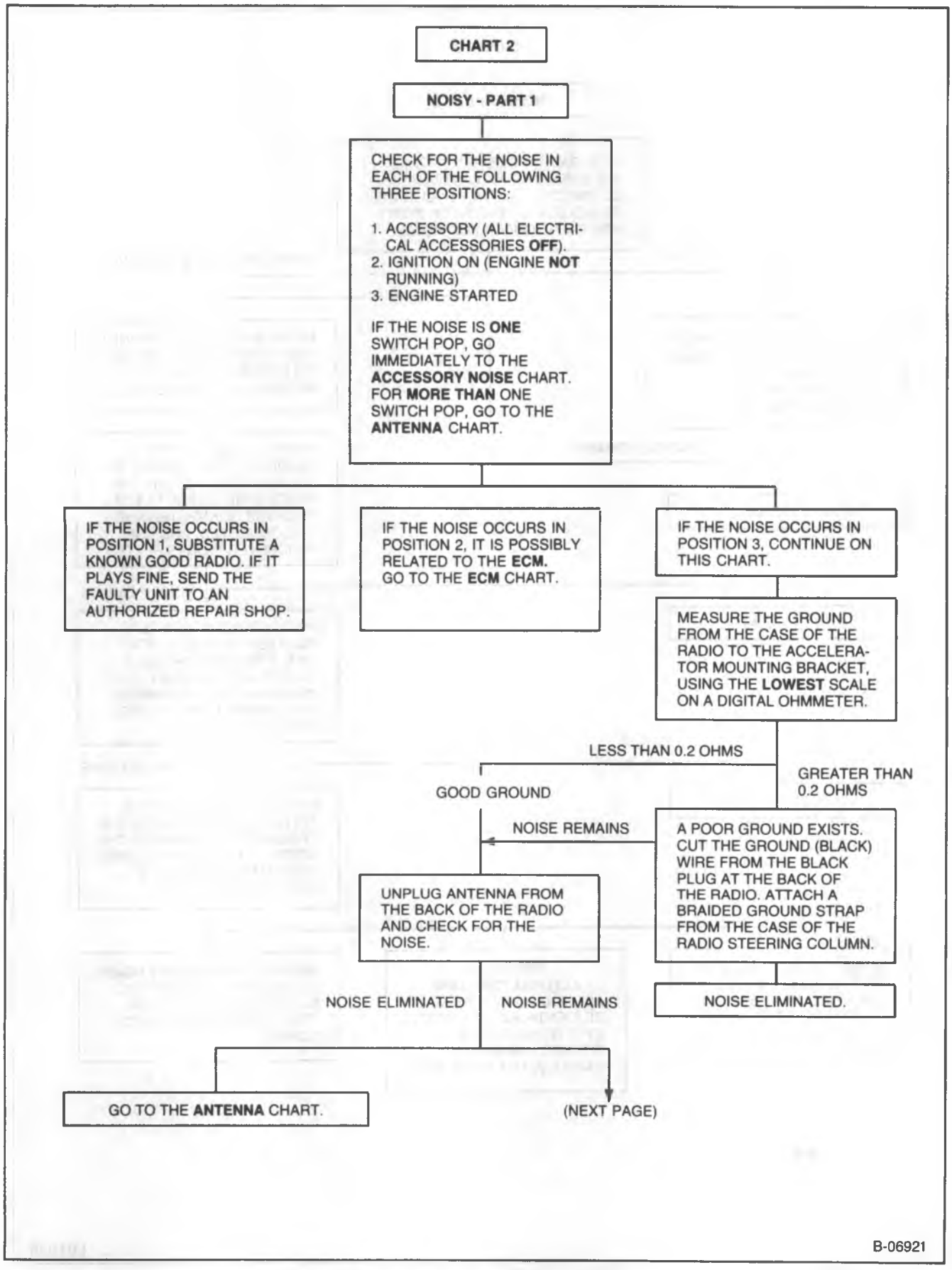

Figure 27—Chart 2 (Noisy Part 1)

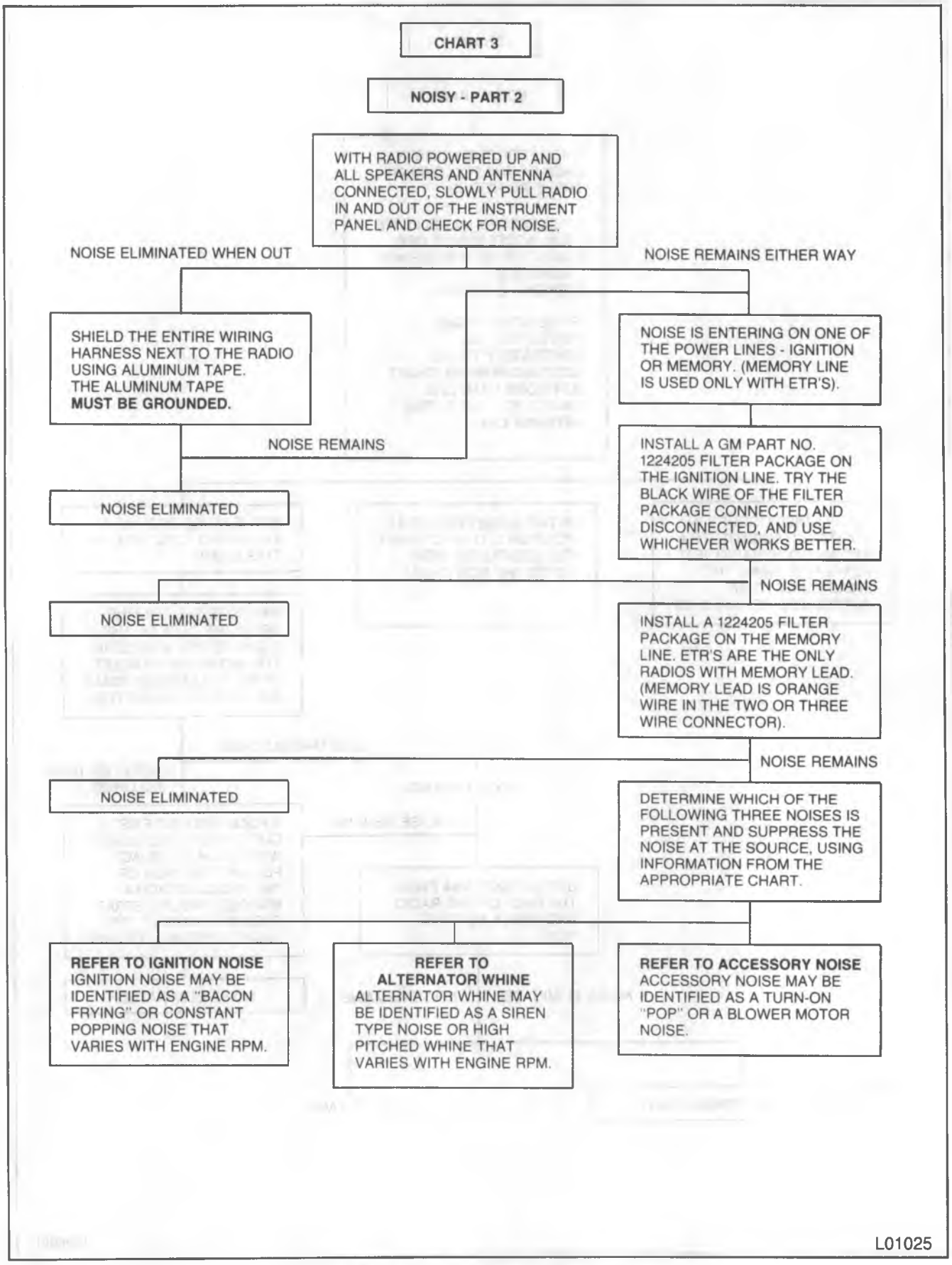

Figure 28—Chart 3 (Noisy Part 2)

CHART 4

ECM NOISE

TRY THE FOLLOWING FIXES IN THE GIVEN ORDER.

1. INSTALL A GM PART NO. 1224205 FILTER PACKAGE TO THE IGNITION POWER LINE (PINK AND BLACK WIRE) OF THE ECM. THE BLACK WIRE OF THE FILTER PACKAGE SHOULD FACE AWAY FROM THE ECM. THE FILTER SHOULD BE TRIED WITH THE FILTER'S BLACK LEAD GROUNDED AND UN-GROUNDED TO DETERMINE BEST RESULTS. THE BLACK WIRE OF THE FILTER MUST FACE AWAY FROM THE ECM.
2. INSTALL A 1224205 FILTER PACKAGE TO THE MEMORY LEAD (ORANGE WIRE, TERMINAL R) OF THE ECM. AGAIN, FACE THE BLACK WIRE OF THE 1224205 AWAY FROM THE ECM.

L01026

Figure 29—Chart 4 (ECM or Digital Dash Noise)

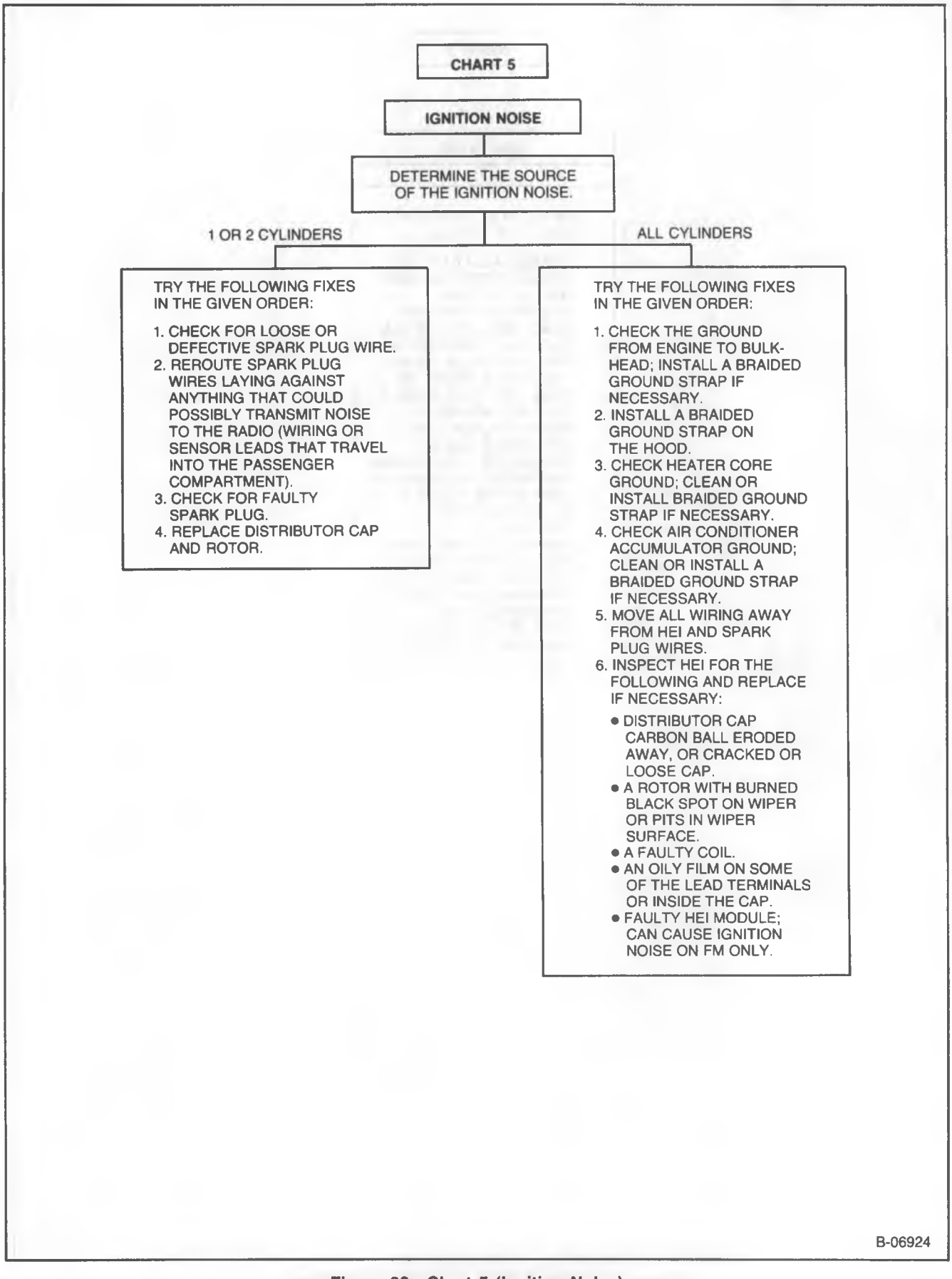

Figure 30—Chart 5 (Ignition Noise)

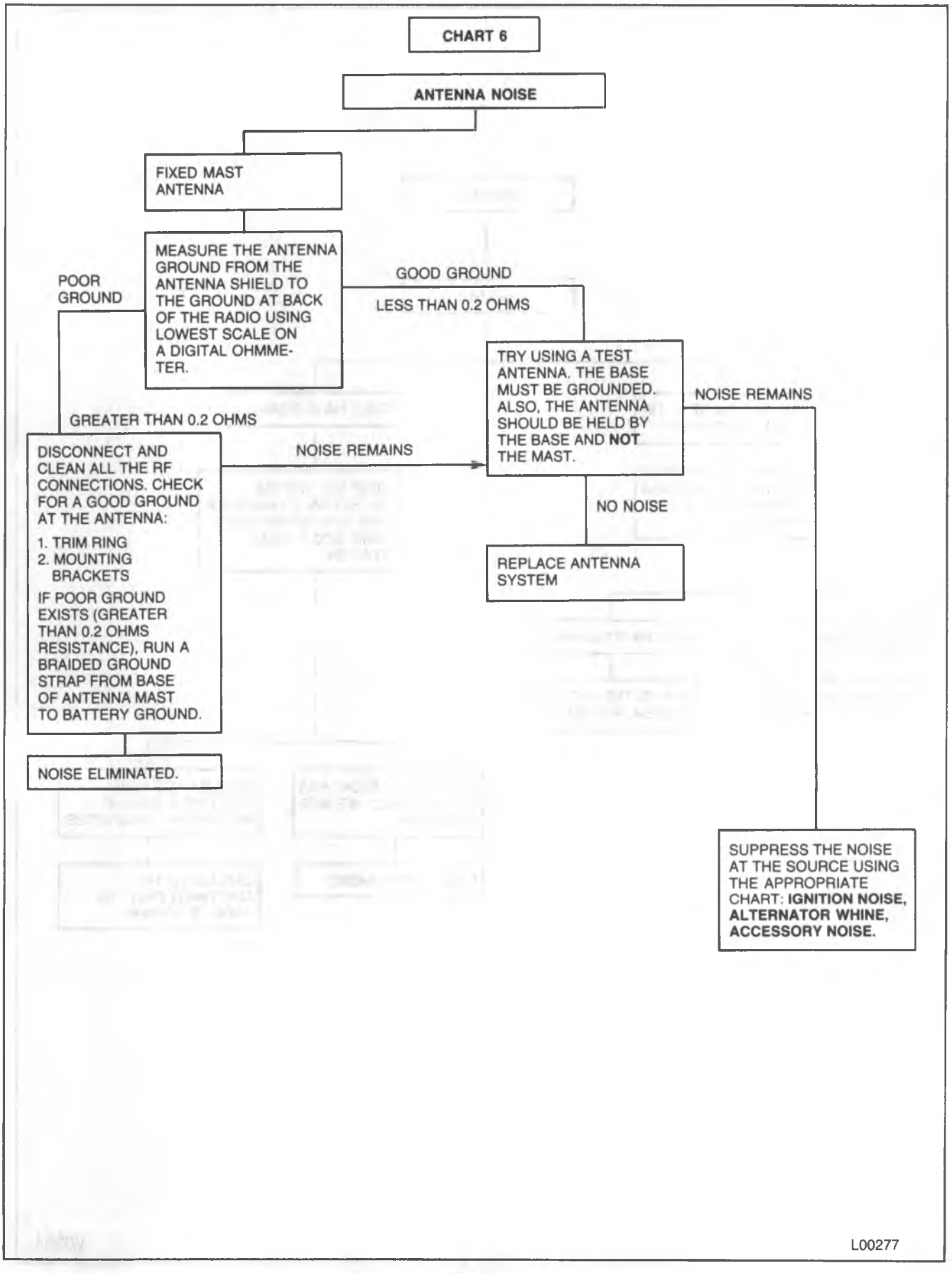

Figure 31—Chart 6 (Antenna Noise)

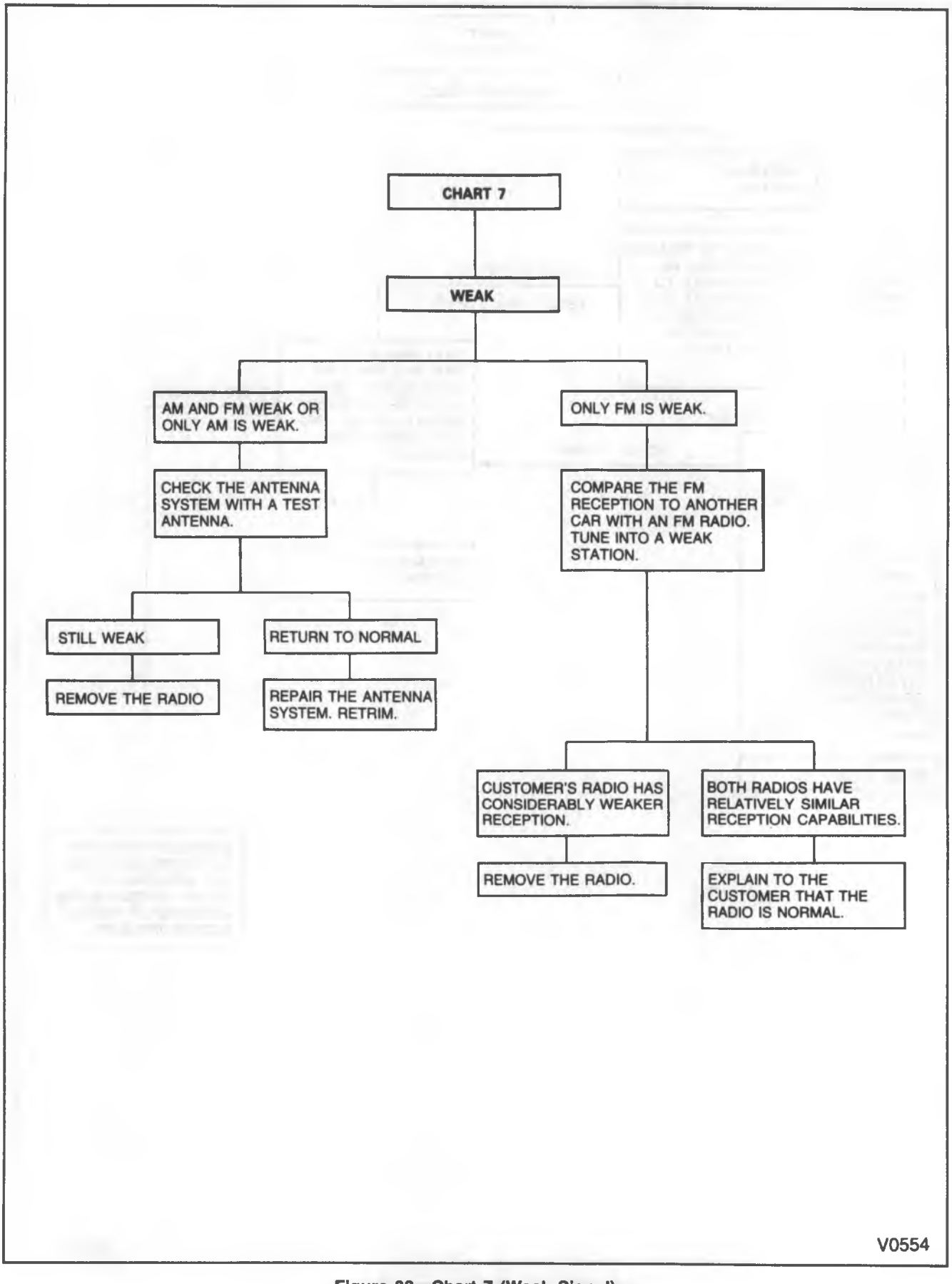

Figure 32—Chart 7 (Weak Signal)

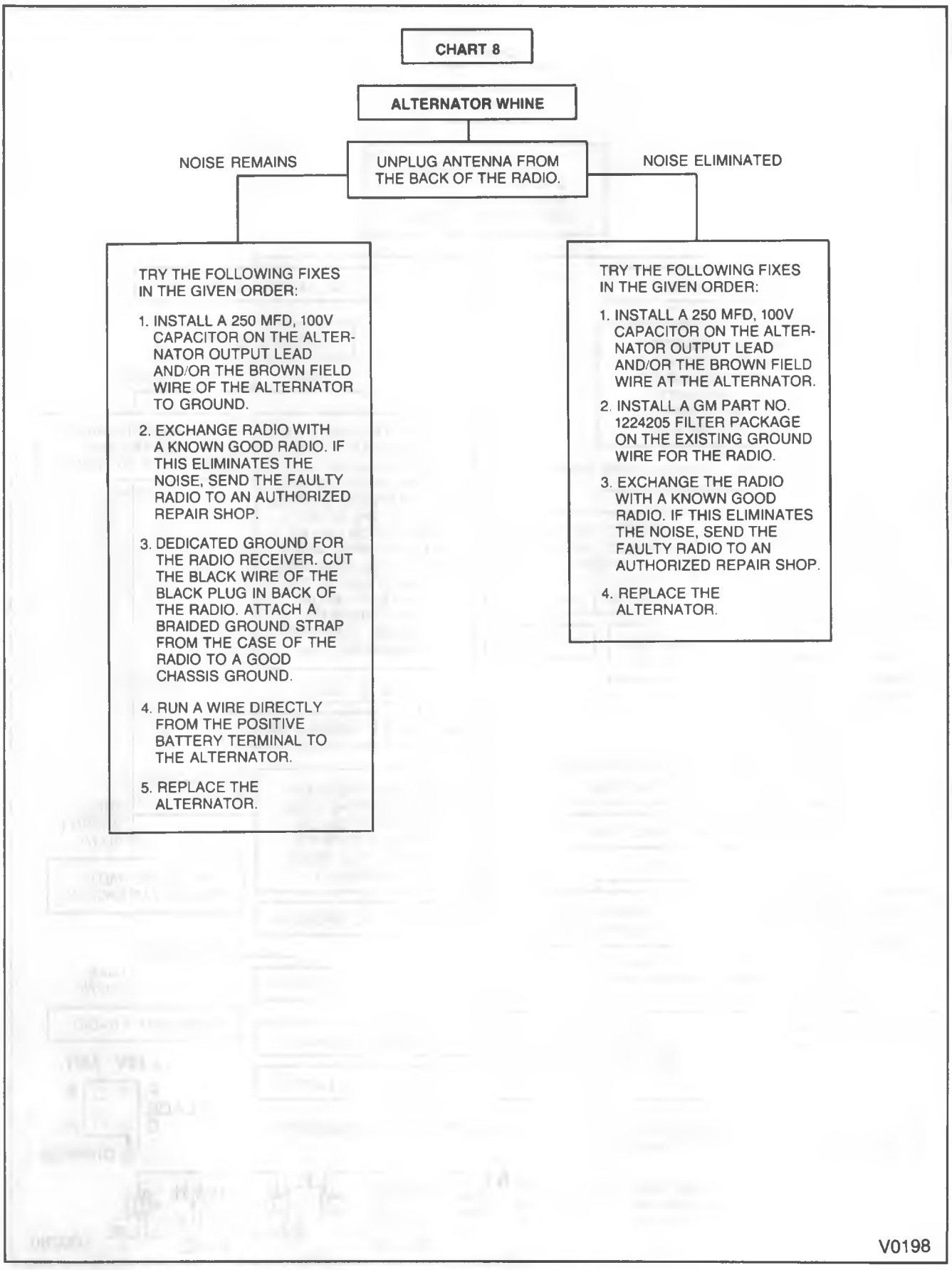

Figure 33—Chart 8 (Alternator Whine)

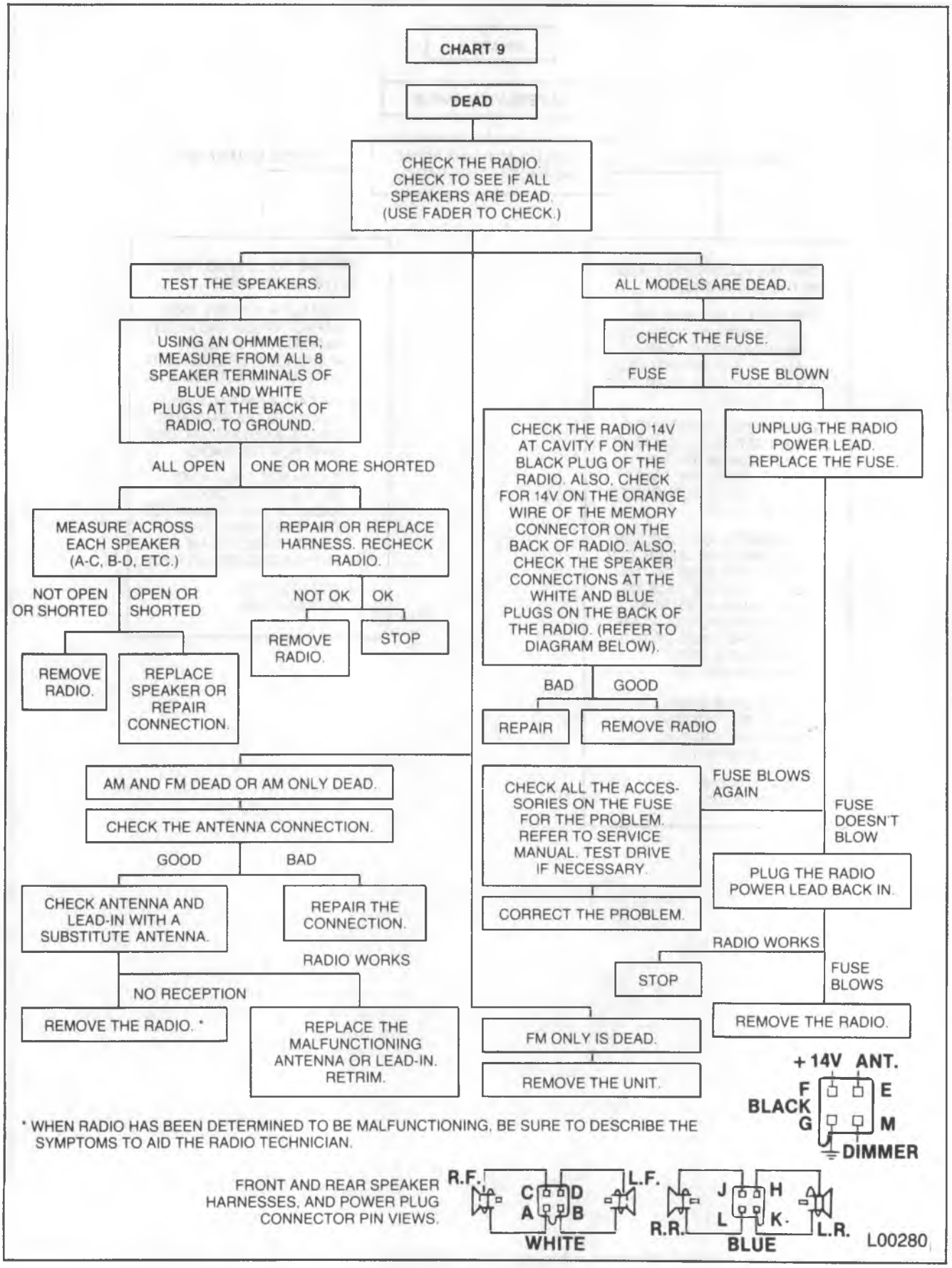

Figure 34—Chart 9 (Dead)

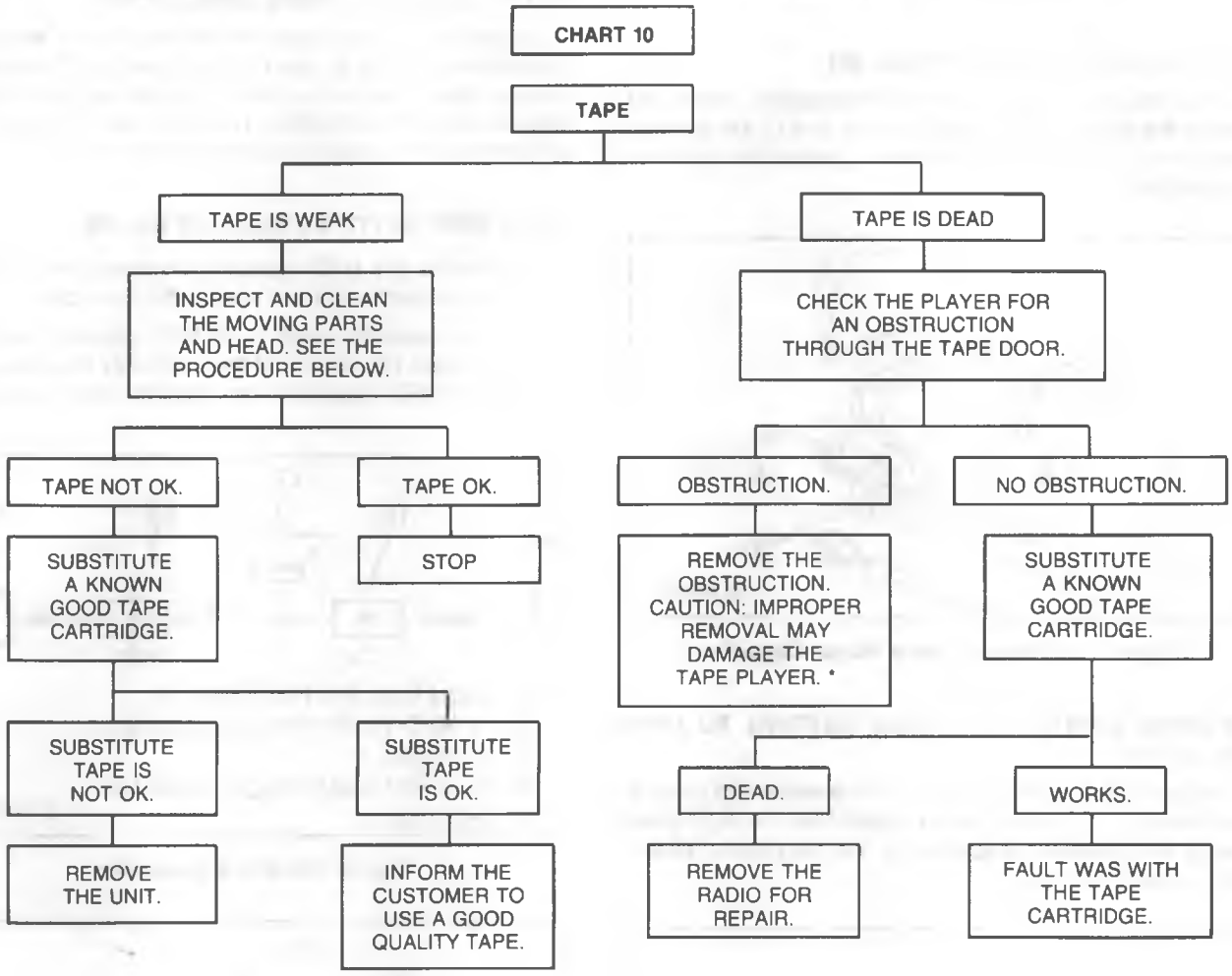

* NOTE: JAMMED TAPE CANNOT BE REMOVED FROM THE SEARCH AND REPEAT TAPE DECK. SEND THE RADIO TO AUTHORIZED REPAIR SHOP.

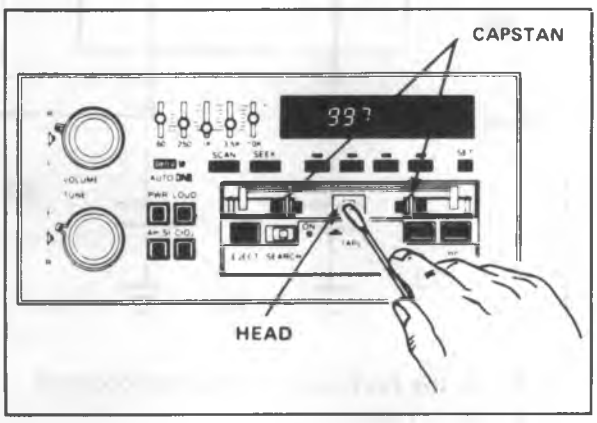

CLEANING PARTS OF TAPE PLAYER TO REDUCE TAPE NOISE

There are two parts that you clean on a tape player; the head and the capstan. Since you can reach them through the tape door, you can leave the tape player in the car.

To clean the head and capstan, use a cotton swab dipped in ordinary rubbing alcohol. Wipe the head and capstan as shown.

L00281

Figure 35—Chart 10 (Tape)

ACCESSORY NOISE

BLOWER MOTOR NOISE (Figure 36)

Install a blower motor feed through capacitor. Attach one end to the blower motor and the other end to the hot lead from the blower motor switch. Also, ground the capacitor ground tab.

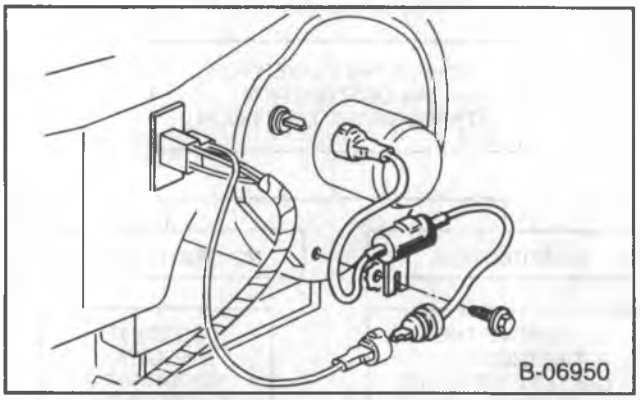

Figure 36—Blower Motor Noise Capacitor

BLOWER SWITCH POP (HIGH SETTING TO OFF) (Figure 37)

Install a diode number IN4001, or the equivalent diode to withstand a 50V inverse peak voltage) from the high speed switch wire (orange) to ground on the high speed blower relay under the hood.

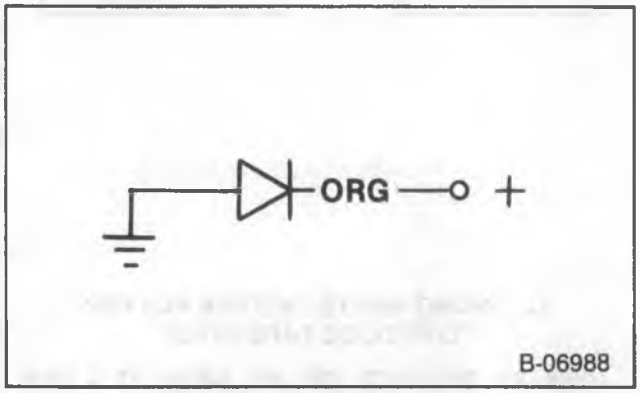

Figure 37—Diode IN4001 Wiring Diagram

BRAKE SWITCH POP

Install a 0.5 MFD capacitor between the two wires going to the brake switch at the brake pedal. Also, install a 0.5 MFD capacitor from the 14V lead to ground at the brake switch.

HORN BLOW-THRU NOISE OR HASH (STATIC IN RADIO SPEAKERS WHEN USING HORN)

Splice blower motor capacitors into each lead. Install the capacitors as close to the horn as possible. Ground the case of the capacitor to chassis ground using the metal ground tab on the capacitor. The technician should solder all connections instead of using quick connects.

HORN SWITCH POPS (Figures 38 and 39)

1. Install a 0.5 MFD capacitor between the switched 14 volt lead and horn lead at the horn delay.
2. If pop persists, install a 0.5 MFD capacitor from the switched 14 volt lead of the horn relay to ground and a 0.5 MFD capacitor from the horn lead to ground.

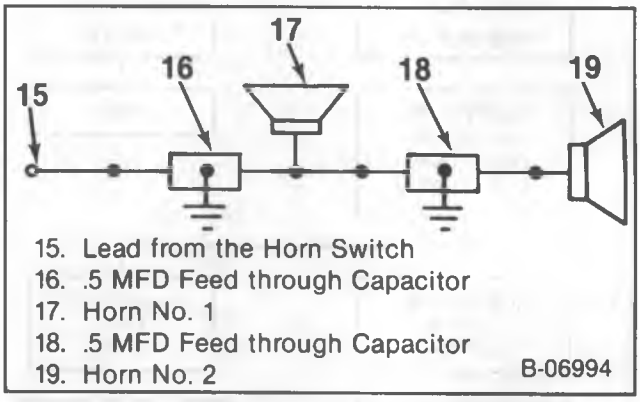

Figure 38—Horn Capacitor

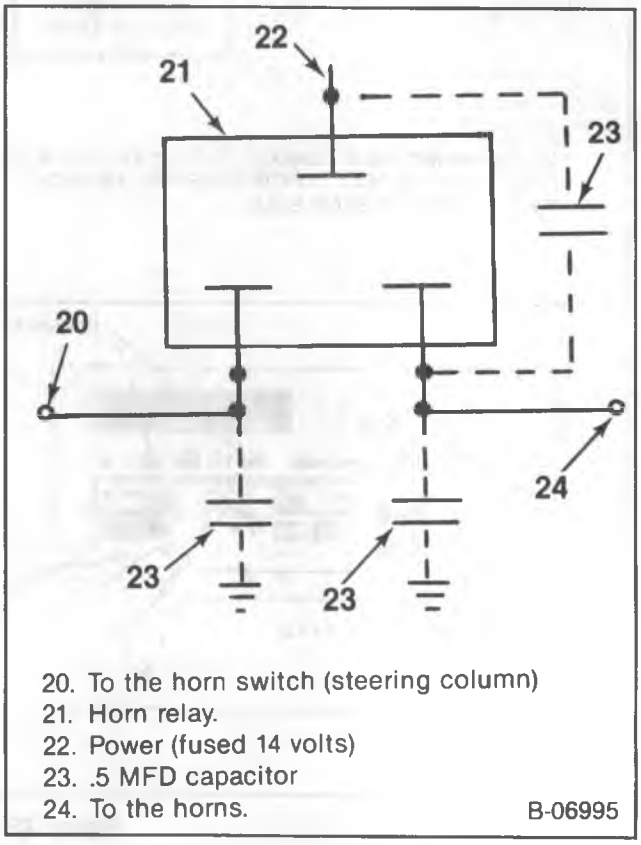

Figure 39—Horn Switch Capacitor

MIXTURE CONTROL SOLENOID POPPING

This complaint is a popping noise which sounds like ignition noise occurring on the AM band. This noise will NOT vary with engine speed. Also, this noise should be noticeable with the ignition "on" and engine "off," but not in "accessory" position.

Problem:

Noise is being radiated from the mixture control solenoid duty cycle lead to the ALDL connector.

Fix:

1. Locate the breakout harness extending from the main harness, about six inches from the ECM harness connector.
2. Locate the light blue wire. It should connect to Pin D on the 15 pin breakout connector.
3. Cut the light blue wire on the vehicle side of the connector at the connector.

REAR DEFOGGER NOISE OR HASH

A broken grid in the defogger in the rear glass may cause a "hash" in the radio. Repairing this break will eliminate the noise.

TACHOMETER NOISE

Locate the wire from the distributor cap to the tachometer and shield the wire by wrapping it with aluminum tape. The tape must also be connected to a good ground.

TORQUE CONVERTER LOCK-UP NOISE DIESEL ENGINES (Figure 40)

This complaint is a harsh or popping noise on "AM" band after torque converter "lock-up" (35-45 mph).

Fix:

1. Install a GM Part No. 1224205 filter package (33) in series with green lead on the VRV switch (30) (see the instructions in filter package). For this application, connect the ground lead in the filter package to the blue lead on the VRV switch, instead of to ground.

   Install a capacitor (0.5 MFD) (38) from the blue lead on VRV switch to ground.

   Fix:

2. Install 220 MFD capacitor (39) rated at 50 VDC across the VRV switch between the green and blue wires.

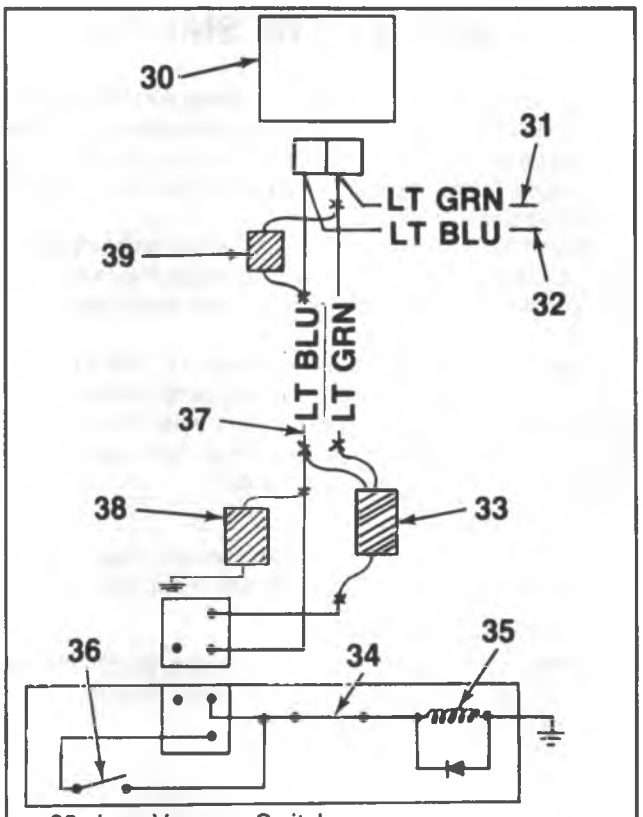

30. Low Vacuum Switch
31. To a Test Terminal
32. To The Brake Switch and Fuse Block
33. Filter Package. 1224205
34. 4-3 Shift (Momentary Open)
35. TCC Solenoid
36. 4th Gear Switch (Closed When Engaged)
37. Filter Ground Wire
38. 0.5 MFD Capacitor
39. 220 MFD Capacitor

L01070

Figure 40—Torque Converter Lock Up Noise

ELECTRIC MOTOR NOISES (POWER WINDOWS, BLOWER MOTORS)

Install a 0.5 MFD capacitor rated at 50 VDC across each motor.

OTHER SWITCH POPS (BLOWER SWITCHES, POWER LOCKS, POWER MIRRORS, PARK-NEUTRAL SWITCH, POWER WINDOWS, WIPERS, REAR WINDOW DEFOGGER)

Install a 0.5 MFD capacitor rated at 50 VDC across the contacts of the switch, from the hot side of the switch to ground or both.

DIAGNOSTIC RF SNIFFER

The antenna sniffer can be used along with the vehicle's radio to locate "Hot Spots" which are generating radio noise interference. These "Hot Spots" will be found in the harnesses, in the upper part of the dash or even between the hood and windshield.

The sniffer is made from an old piece of antenna lead-in from a mast or power antenna. The longer the lead-in, the better, since it will make the sniffer more flexible as a diagnostic tool.

Make the sniffer as shown in figure 41. The 50 mm (2 inch) section with the black coating and braided shield stripped back becomes the antenna when the sniffer is plugged into the radio's antenna socket. It can then be used to probe and search out "Hot Spots."

Procedure:

1. While listening to the complaint noise, disconnect the antenna and plug the sniffer into the antenna socket.
2. Turn the radio volume up.
3. When searching for the noise source, keep fingers off of the probe, otherwise erroneous results will be received.

When checking for noise on a wire, the best results will be achieved when the sniffer is placed parallel to the wire.

It must be noted that the sniffer will also locate "normal" hot spots. However, the technician who becomes familiar with the sniffer's capabilities will find it the most useful diagnostic tool in noise suppression work.

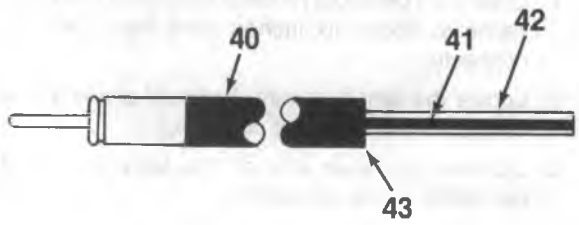

40. Antenna Lead In
41. Center Wire
42. White Plastic Insulator
43. 50 mm (2 in.) of Coax Shield Removed

B-09197

Figure 41—RF Sniffer

RADIO ON-VEHICLE SERVICE

RADIO RECEIVER REPLACEMENT

R/V MODELS

Remove or Disconnect (Figure 42)

1. Battery ground cable.
2. Steering column lower cover.
3. Instrument cluster trim plate.
4. Receiver brace screw (62) from instrument panel.
5. Receiver attaching screws.
   - Pull receiver through dash to gain access to electrical connectors.
6. Power feed, (64) speaker (64) and antenna harnesses (65).
7. Receiver (60).
8. Receiver brace (63) from receiver (60).

Install or Connect (Figure 42)

1. Receiver brace (13) to receiver (60).
2. Power feed, (64) speaker (64) and antenna harnesses (65).
3. Receiver (60).
4. Receiver attaching screws.
5. Brace screw (62) to instrument panel.
6. Instrument cluster trim plate.
7. Steering column lower cover.
8. Battery ground cable.

NOTICE: To prevent receiver damage, always connect speaker wiring harness to the receiver before applying power to the receiver.

ANTENNA REPLACEMENT

R/V MODELS

Remove or Disconnect (Figure 43)

1. Battery ground cable.
2. Antenna from radio.
3. Mast (57).
   - Unscrew mast from body and cable assembly (50).
4. Bezel (53).
5. Screws (58) from body and cable assembly (50).
6. Body and cable assembly (50).
7. Insulator (59).

Install or Connect (Figure 43)

1. Insulator (59).
2. Body and cable assembly (50).
   - Align with holes in insulator and fender.
3. Screws (58).
4. Bezel (53).
5. Mast (57).
   - Screw the mast onto the body and cable assembly.
6. Antenna to radio.
7. Battery ground cable.

SPEAKER REPLACEMENT

R/V MODELS

Front Speaker

Remove or Disconnect (Figures 44 and 45)

1. Battery ground cable.
2. Instrument cluster bezel upper four screws.
3. Instrument panel pad screws.
4. Pad (70).
5. Speaker to dash panel screws (72).
6. Speaker harness.
   - Lift up speaker (71).
7. Speaker (71).

Install or Connect (Figures 44 and 45)

1. Speaker harness to speaker (71).
2. Speaker (71).
3. Speaker to dash panel screws (72).
4. Pad (70).
5. Instrument panel pad screws.
6. Instrument cluster bezel upper four screws.
7. Battery ground cable.

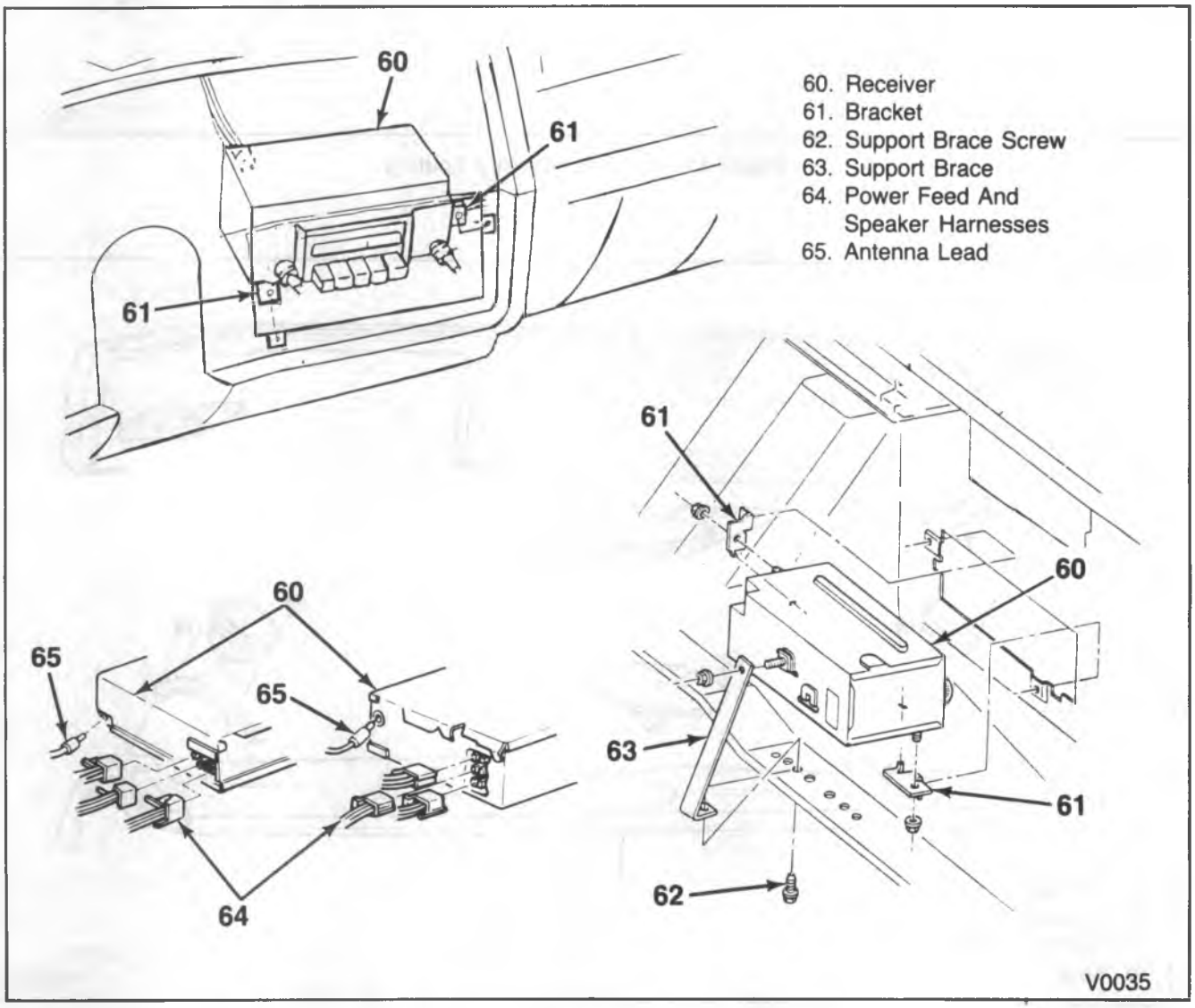

Figure 42—Receiver Installation

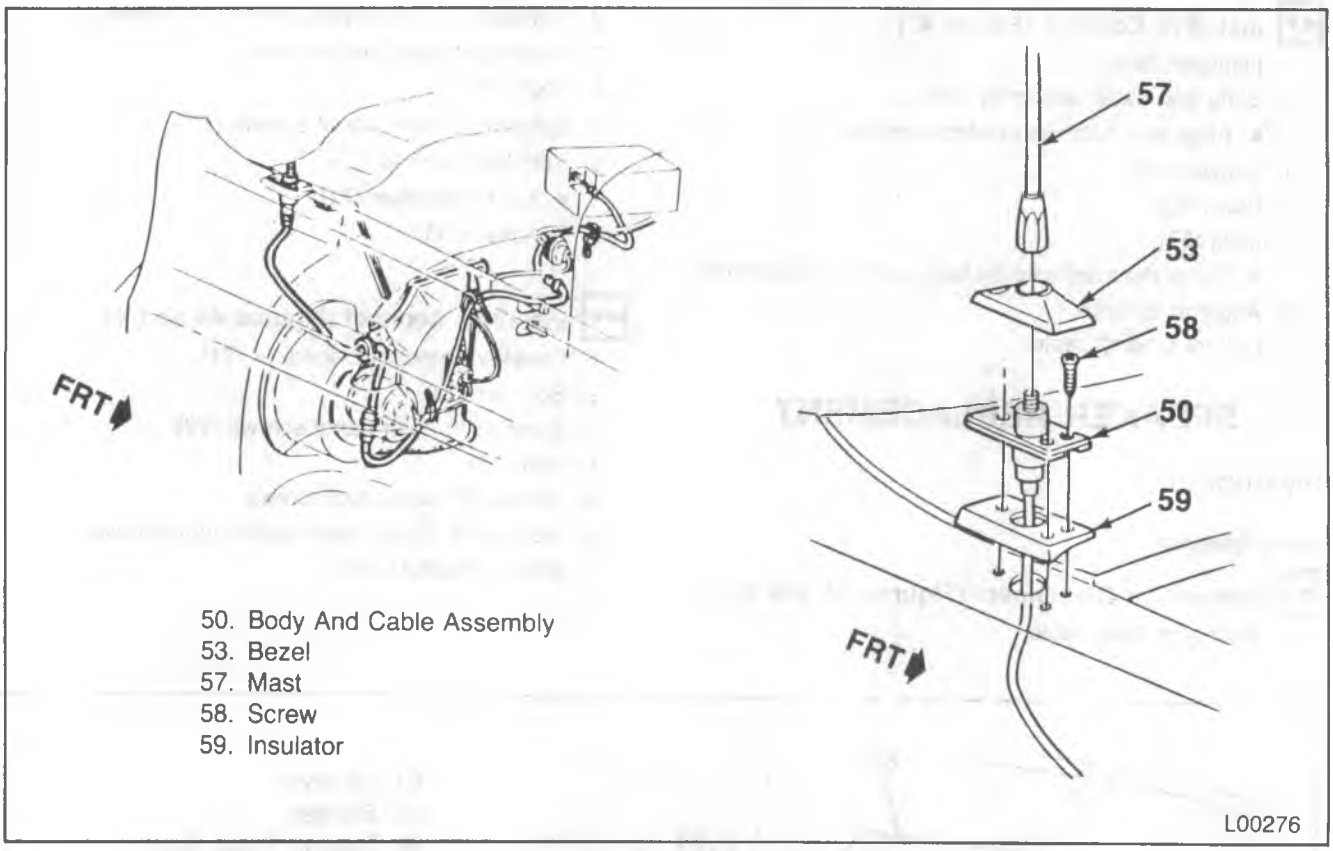

Figure 43—R/V Antenna Wire Routing

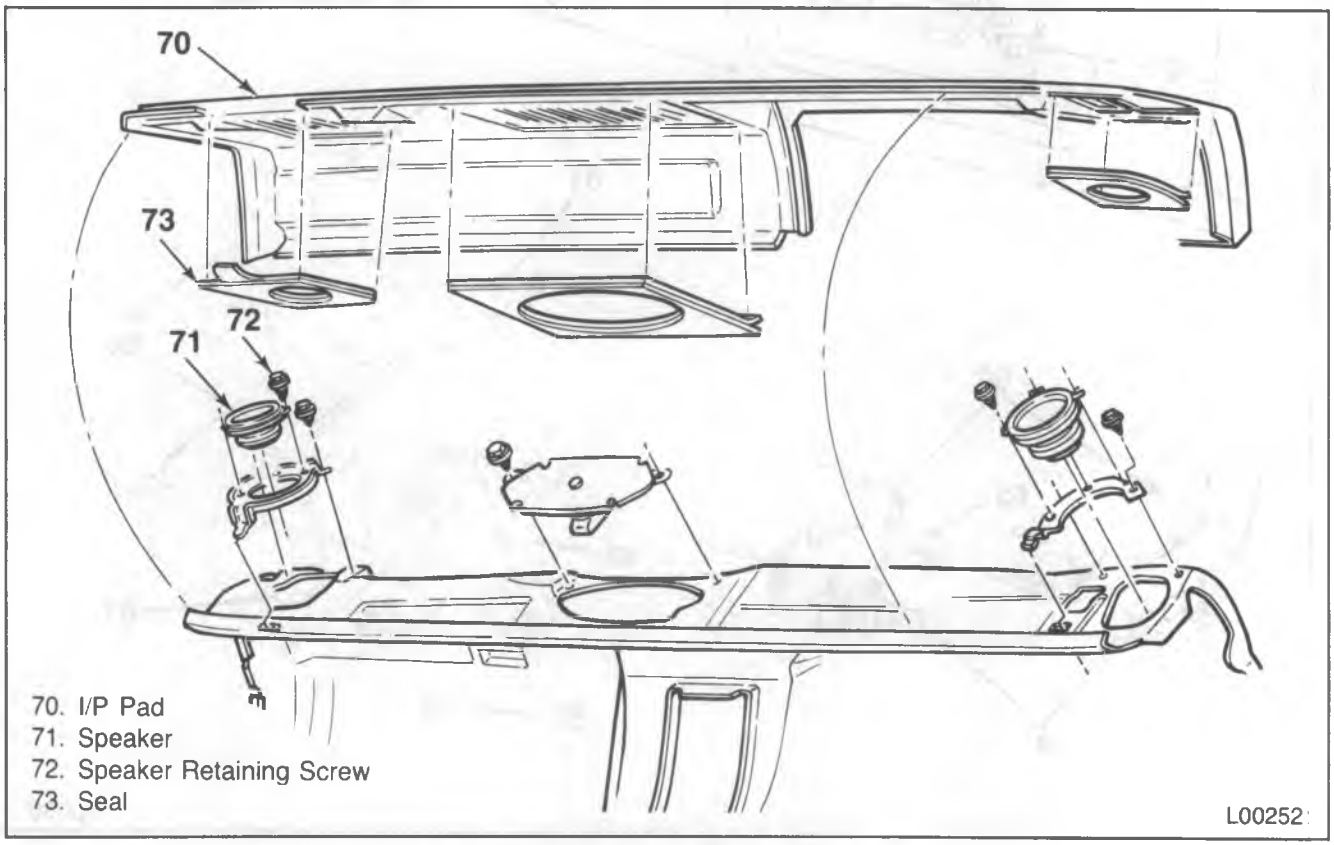

Figure 44—R/V Front Speakers

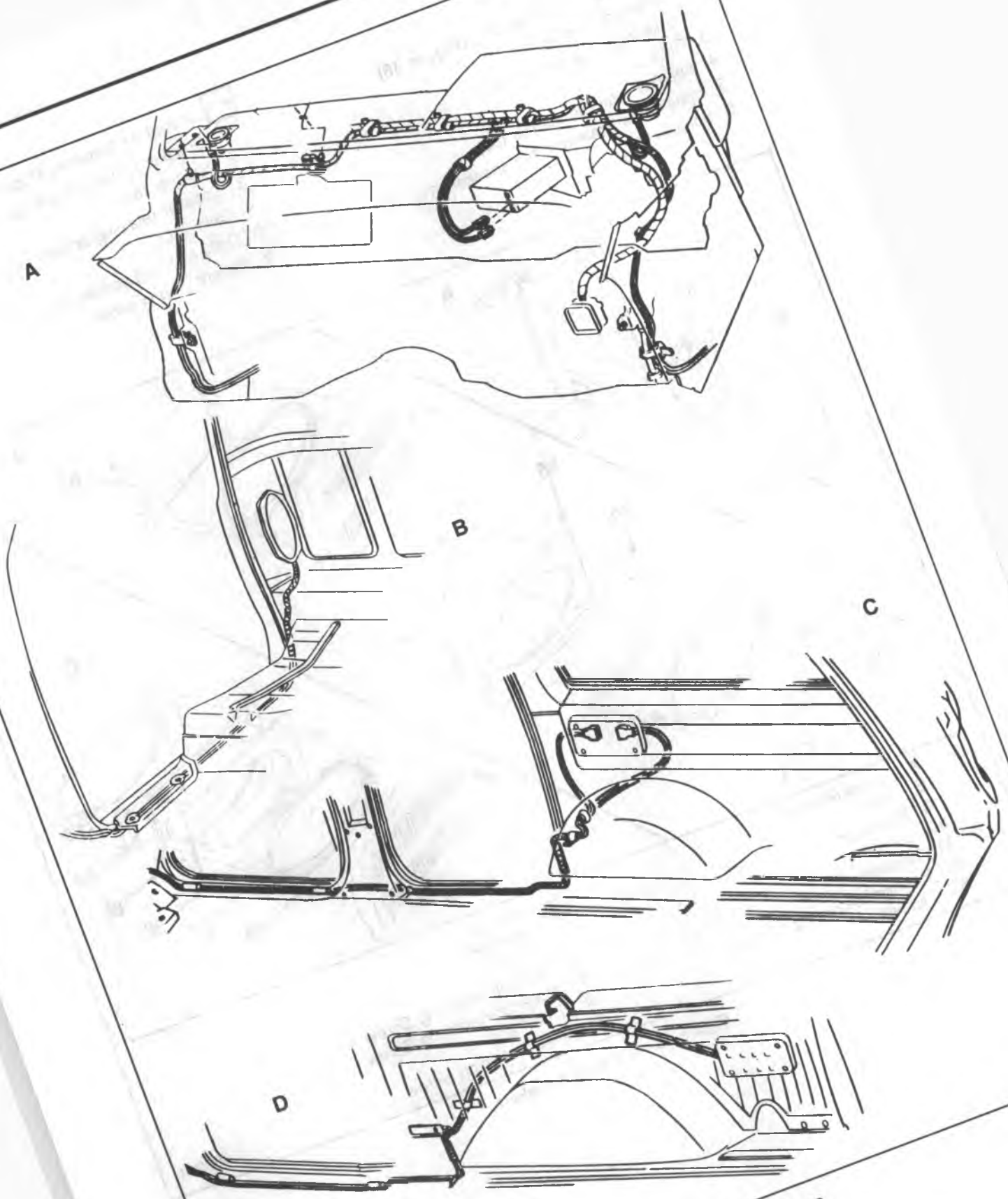

A. R/V Models
B. Pickup
C. Suburban
D. Utility

Figure 45—R/V Speaker Harness

Rear Speaker

Remove or Disconnect (Figure 46)

1. Battery ground cable.
2. Grille retaining screws (90).
3. Grille (80).
4. Speaker retaining screws (82).
5. Speaker harness from the speaker (81).
6. Speaker (81).

Install or Connect (Figure 46)

1. Speaker harness to the speaker.
2. Speaker (81).
3. Speaker retaining screws (82).
4. Grille (80).
5. Grille retaining screws (90).
6. Battery ground cable.

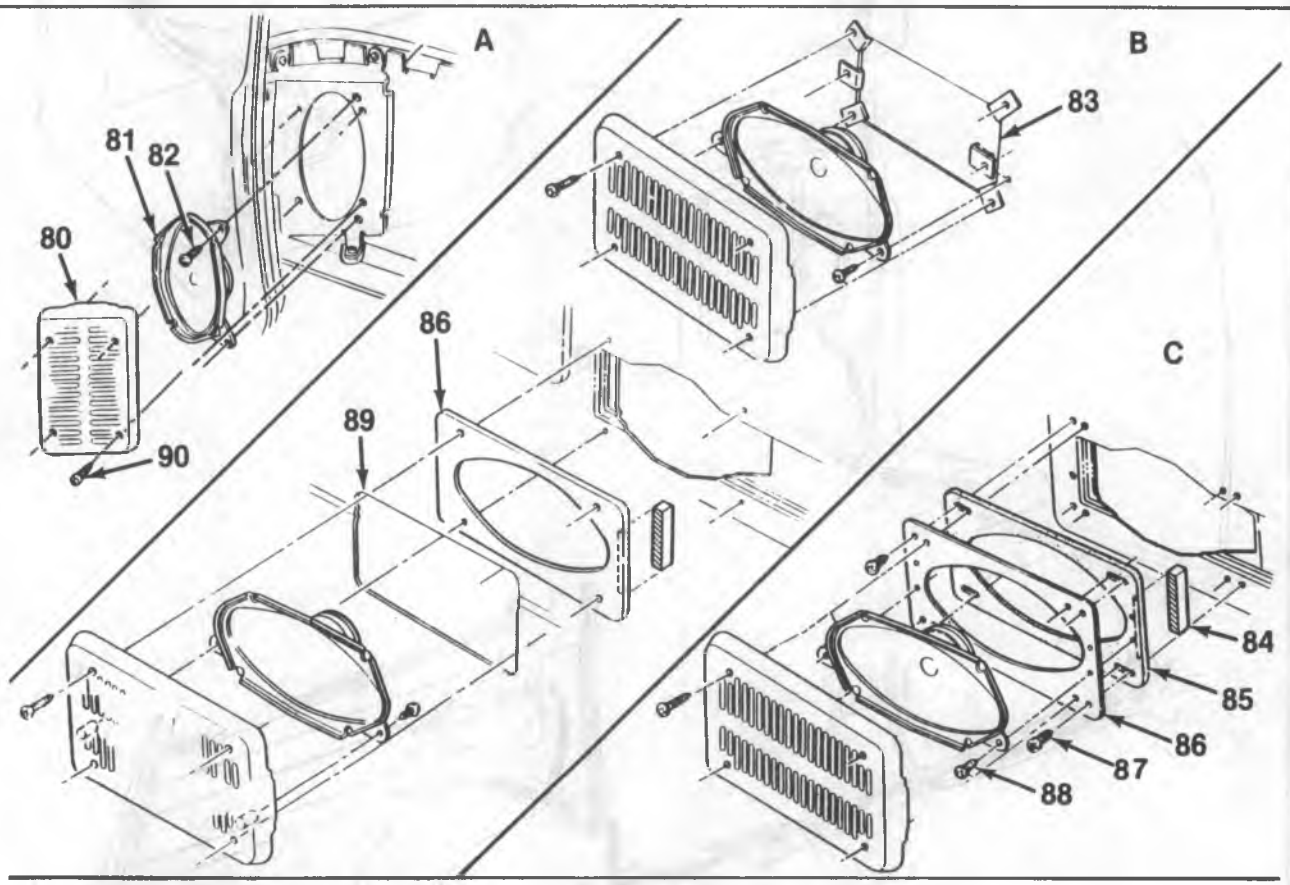

A. Pickup Models
B. Utility
C. Suburban
80. Grille
81. Speaker
82. Speaker Mounting Screw
83. Clip Nut
84. Insulator
85. Insulator
86. Bracket
87. Bracket Retaining Screw
88. Speaker Retaining Screw
89. Trim Panel
90. Grille Retaining Screw

L00254

Figure 46—R/V Rear Speakers

REAR WINDOW DEFOGGER DESCRIPTION

The optional rear window defogger system consists of a glass that has a number of horizontal ceramic silver compound element lines and two vertical bus bars baked into the inside surface during the glass forming operation. The feed wire is soldered to the bus bar on the left side. The ground wire is soldered to the bus bar on the right side.

The system operates on 12 volts. Under some conditions, heat from the glass may not be detected by finger touch. The length of time required to remove interior fog from the back glass will vary with such conditions as vehicle speed, outside glass temperature, atmospheric pressure and number of passengers.

This system uses an instrument panel mounted switch with an integral indicator lamp and will operate for 5 to 10 minutes and then will turn off through the use of an automatic timer. The system can be turned off during this operating period by turning either the instrument panel switch or the engine control switch off.

REAR WINDOW DEFOGGER HARNESS

(Figures 47 and 48)

The rear window defogger harness starts at the fuse block and follows the instrument panel harness to the defogger switch. The switch is mounted to a bezel located on the instrument panel. The harness continues from the switch through a grommet into the engine compartment, and then follows the rear lamp harness along the frame rail to the end gate wire harness, where it continues up into the end gate and is attached to the feed wire on the left side of the defogger grid.

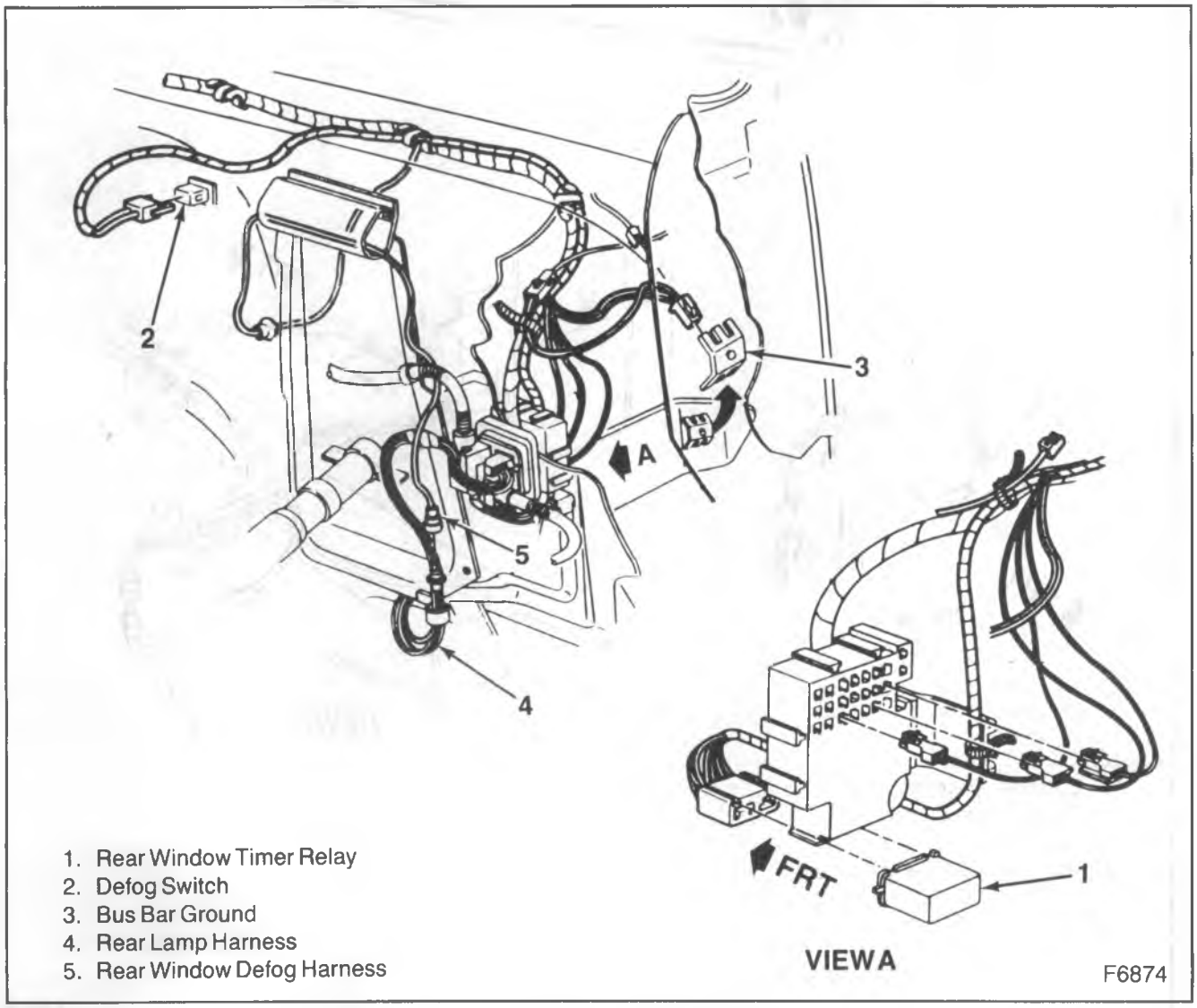

1. Rear Window Timer Relay
2. Defog Switch
3. Bus Bar Ground
4. Rear Lamp Harness
5. Rear Window Defog Harness

Figure 47—Rear Window Defogger Front Harness

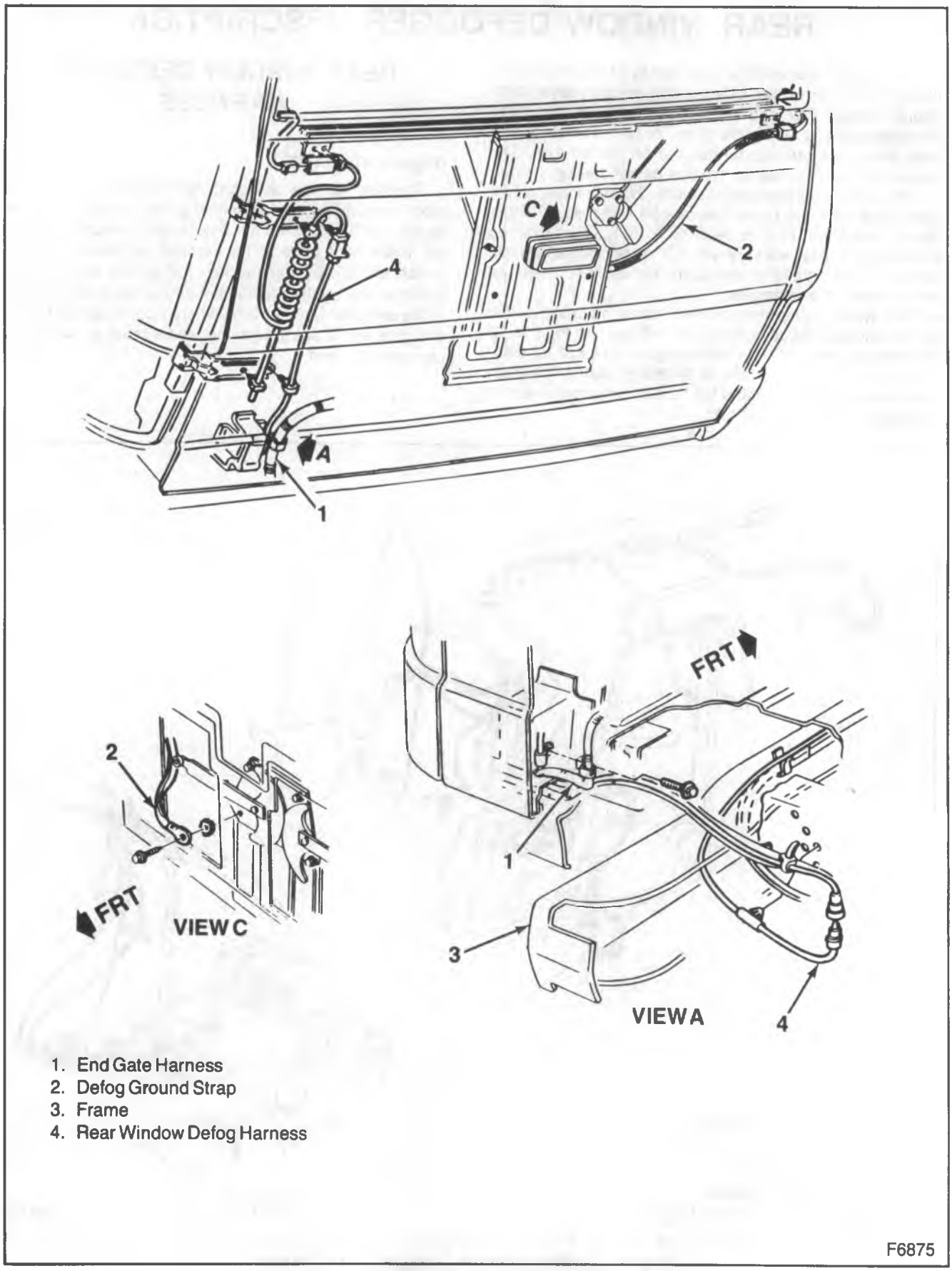

Figure 48—Rear Window Defogger Rear Harness

DIAGNOSIS OF REAR WINDOW DEFOGGER SYSTEM

PROBLEM	POSSIBLE CAUSE	CORRECTION
System Won't Heat The Window	1. Blown fuse.	1. Replace the fuse with a fuse of the correct rating.
	2. Broken switch.	2. Test the switch for conduction. Replace the switch if necessary.
	3. Circuit is open.	3. Test for voltage at the left connection of the window. If voltage is present, check the ground circuit. If voltage is not present, test the relay for operation and voltage. If the relay voltage is present, find the open in the harness between the relay and the heater.
System Won't Turn On. The Indicator Lamp Is Off.	1. Blown fuse.	1. Replace the fuse with a fuse of the correct rating.
	2. Relay is faulty.	2. Make sure the relay is firmly seated in its socket. Jump the ORN/BLK wire to the LT BLU wire. The relay should click. If the relay clicks, find the open between the switch and the relay if the relay doesn't click, replace the relay.
	3. Switch is faulty.	3. Test the switch with a test lamp. Replace the switch if it's proven faulty.

GMTB-4008-A

REAR WINDOW DEFOGGER ON-VEHICLE SERVICE

REAR WINDOW DEFOGGER SWITCH REPLACEMENT

Remove or Disconnect (Figure 49)

1. Battery ground cable from the battery.
2. Screw (4) from the switch trim plate (3).
3. Switch trim plate (3) from the instrument panel.
4. Harness connector (5) from the switch (2).
5. Switch (2) from the switch trim plate (3) by pressing the lock tabs and pulling from the switch trim plate.

Install or Connect (Figure 49)

1. Switch (2) to the switch trim plate (3).
2. Harness connector (5) to the switch (2).
3. Switch trim plate (3) to the instrument panel.
4. Screw (4) to the switch trim plate (3).
5. Battery ground cable to the battery.

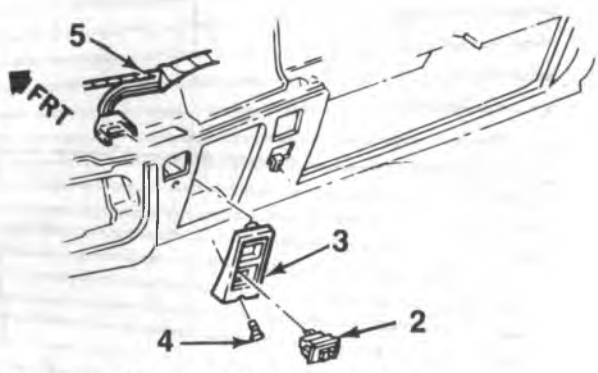

2. Rear Window Defogger Switch
3. Switch Trim Plate
4. Screw
5. Defog Harness

F6888

Figure 49—Rear Window Defogger Switch

TESTING GRID LINES

1. Start the engine and turn on the defogger system.
2. Ground an unpowered test lamp and lightly tough the prod to each grid line.
   - Move the lamp from the feed wire side to the grounded side of each grid. The lamp should be fully bright but then gradually dim as it is moved across the grid. Be sure to check each grid in at least two places to avoid the possibility of bridging a gap (figure 50).
3. If the test lamp shows full brilliance at both ends of the grid line, check for a loose ground wire contact to the body metal.
4. If the lamp suddenly goes out as it is moved across the grid, a break has been located.

GRID LINE REPAIR

Tools Required:

Rear Window Defogger Repair Kit

Heat Gun — capable of reaching 260°C (500°F)

Remove or Disconnect

1. The battery ground cable.

Inspect

- Rear window defogger grid lines, mark grid line breaks on the outside of the window with a grease pencil.

Clean

- The grid line area to be repaired. Buff with steel wool and wipe clean using a cloth dampened with alcohol. Buff and clean about 6 mm (0.25 inch) beyond each side of the break in the grid line. Be sure the glass is at room temperature.

Install or Connect

1. Grid line repair template or two strips of tape positioned above and below the repair area. Repair template or tape **must** be used to control the width of the repair area.
   - If the template is used, be sure the die-cut metering slot is the same width as the grid line.

CAUTION: Keep the repair material away from heat, sparks, or flame, since the material is flammable. Avoid breathing the vapor, or allowing it to contact your skin or eyes, since it can cause irritation.

2. The grid repair material at room temperature to the repair area using a small brush (figure 51).
3. Remove the template or tape carefully.

NOTICE: The grid line repair material must be cured with heat. To avoid heat damage to the interior trim, protect the trim near the repair area where the heat is to be applied.

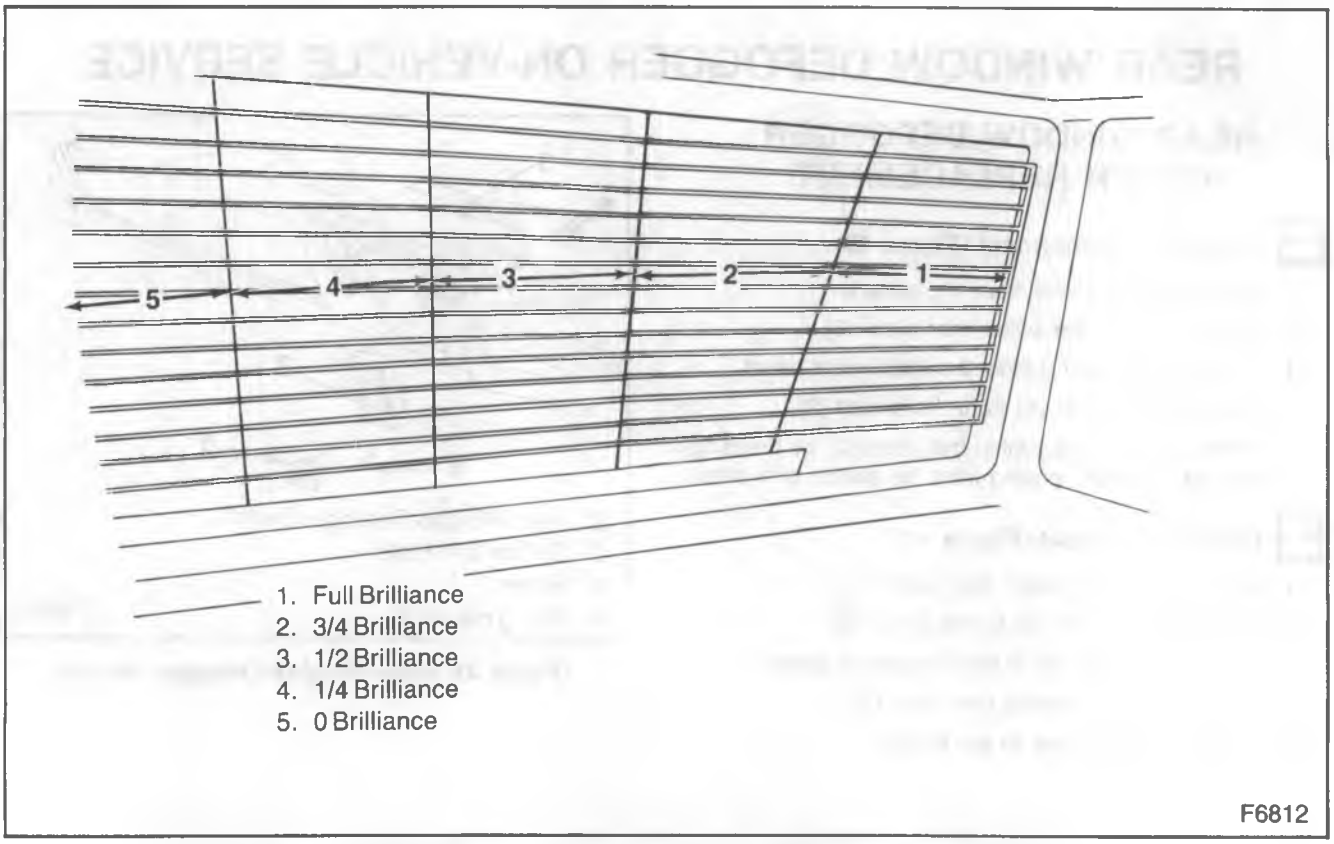

Figure 50—Test Lamp Brilliance Zones — Normal Operating Rear Window Defogger

4. Holding the heat gun 25 to 50 mm (1 to 2 inches) from the repair area, apply heat at 260°-370°C (500° to 700°F) for 2 to 3 minutes (figure 52).
   - If a heat gun is not available, allow the repair to air dry at an ambient temperature of 20° to 32°C (70° to 90°F) for 24 hours.
5. Battery ground cable.

Inspect

1. Grid line repair area. If the repair appears discolored, apply a coating of tincture of iodine to the repair area using a pipe cleaner or fine brush. Allow iodine to dry for about 30 seconds and carefully wipe off the excess with a lint free cloth.
2. Test the defogger operating to verify grid line repair.
3. Leave the grid area untouched for 24 hours.

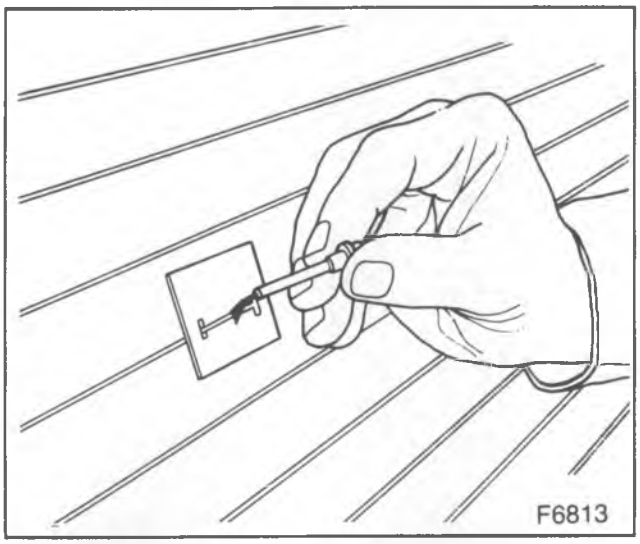

Figure 51—Applying Grid Material to Broken Grid Line

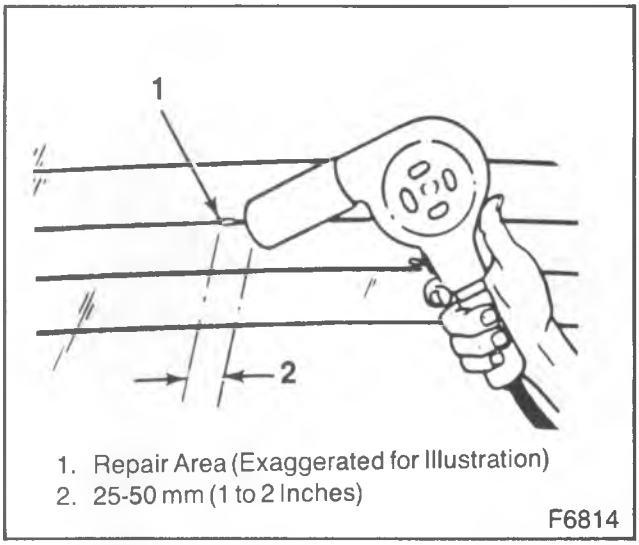

1. Repair Area (Exaggerated for Illustration)
2. 25-50 mm (1 to 2 Inches)

Figure 52—Applying Heat to Grid Line Repair

BRAIDED LEAD WIRE REPAIR

- The rear defogger bus bar lead wire or terminal can be reattached by resoldering using a solder containing 3 percent silver and a rosin flux paste.
- Before soldering the bus bar, the repair area should be buffed with fine steel wool. This removes the oxide coating formed during glass manufacture.
- Apply the paste-type rosin flux in small quantities to the wire lead and bus bar repair are using a brush.
- The soldering iron tip should be coated with solder before hand. Use only enough heat to melt the solder and only enough solder to ensure a complete repair.
- Do not overheat the wire when resoldering it to the bus bar.

SECTION 10

BODY

CONTENTS

SUBJECT	PAGE
Doors	10A1- 1
Seats	10A2- 1
Glass	10A3- 1
Interior Trim	10A4- 1
End Gate	10A5- 1
Cab and Body Maintenance	10B- 1

SECTION 10A1

DOORS

NOTICE: When door lock striker fasteners are removed, always reinstall them at the same location from which they were removed. If a fastener needs to be replaced, use the correct part number fastener for that application. If the correct part number fastener is not available, a fastener of equal size and strength (or stronger) may be used. Fasteners that are not reused, and those requiring thread locking compound will be called out. The correct torque value must be used when installing fasteners that require it. If the above conditions are not followed, parts or system damage could result.

CONTENTS

SUBJECT	PAGE
R/V Model Side Front Door On-Vehicle Service	10A- 2
Door And Hinge Replacement	10A- 2
Door Adjustment	10A- 3
Door Trim Panel Replacement	10A- 4
Door Vent/Window Run Channel Assembly Replacement	10A- 5
Vent Glass Replacement	10A- 6
Vent Window Adjustment	10A- 6
Door Window Replacement	10A- 7
Inner Window Weatherstrip Replacement	10A- 7
Outer Window Weatherstrip Replacement	10A- 8
Rear Glass Run Channel Replacement	10A- 8
Window Regulator Replacement	10A- 8
Door Lock Replacement	10A-10
Power Door Lock Motor Replacement	10A-10
Door Outside Handle Replacement	10A-11
Door Lock Cylinder Replacement	10A-11
Door Inside Handle Replacement	10A-12
Door Weatherstrip Replacement	10A-12
Outside Rear View Mirror Replacement	10A-13
Below Eyeline Outside Rear View Mirror Replacement	10A-13
West Coast Outside Rear View Mirror Replacement	10A-13
Door Air Valve Replacement	10A-14
R/V Model Side Rear Doors On-Vehicle Service	10A-14
Door And Hinge Replacement	10A-14
Door Adjustment	10A-15
Door Trim Panel Replacement	10A-16
Stationary Glass/Window Run Channel Assembly Replacement	10A-17

CONTENTS (CONTINUED)

SUBJECT	PAGE
R/V Model Side Rear Doors On-Vehicle Service (Continued)	
Door Window Replacement	10A-17
Inner Window Weatherstrip Replacement	10A-18
Outer Window Weatherstrip Replacement	10A-19
Front Glass Run Channel Replacement	10A-19
Window Regulator Replacement	10A-19
Door Lock Replacement	10A-20
Power Door Lock Motor Replacement	10A-20
Door Outside Handle Replacement	10A-21
Door Inside Handle Replacement	10A-21
Remote Control Replacement	10A-23
Door Weatherstrip Replacement	10A-23
Door Air Valve Replacement	10A-23
R/V Model Rear Doors On-Vehicle Service	10A-24
Door And Hinge Replacement	10A-24
Door Adjustment	10A-24
Striker Replacement	10A-25
Bumper Wedge Replacement	10A-26
Door Trim Panel Replacement	10A-26
Window Replacement	10A-26
Right Door Lower Latch Replacement	10A-28
Right Door Upper Latch Replacement	10A-28
Right Door Control Assembly Replacement	10A-28
Door Outside Handle Replacement	10A-29
Left Door Lower Latch Replacement	10A-29
Check Strap Replacement	10A-30
Right Door Weatherstrip Replacement	10A-31
Left Door Weatherstrip Replacement	10A-31
Secondary Weatherstrip Replacement	10A-32
Special Tools	10A-33

R/V MODEL SIDE FRONT DOOR ON-VEHICLE SERVICE

DOOR AND HINGE REPLACEMENT

Remove or Disconnect (Figure 1)

- Open the door.

1. Electrical wiring harness (if equipped).
   - Refer to "Door Trim Panel Replacement," for access to the wiring harness.
- Mark the position of the hinges on the door.

2. Door hinge to door bolts (4).
3. Door from the vehicle.
- Mark the position of the hinges on the body side pillar.

4. Hinge to door pillar bolts (6).
5. Door pillar to hinge bolt (7).
6. Hinges from the vehicle.

Install or Connect (Figure 1)

1. Hinges to the vehicle.
- Align the hinges to the marks on the body side pillars.

2. Hinge to door pillar bolts (6).
3. Door pillar to hinge bolt (7).
4. Door to the vehicle.
   - Align the marks on the door to the hinges.
5. Door hinge to door bolts (4).
6. Electrical wiring harness (if equipped).
   - Refer to "Door Trim Panel Replacement," for access to the wiring harness.

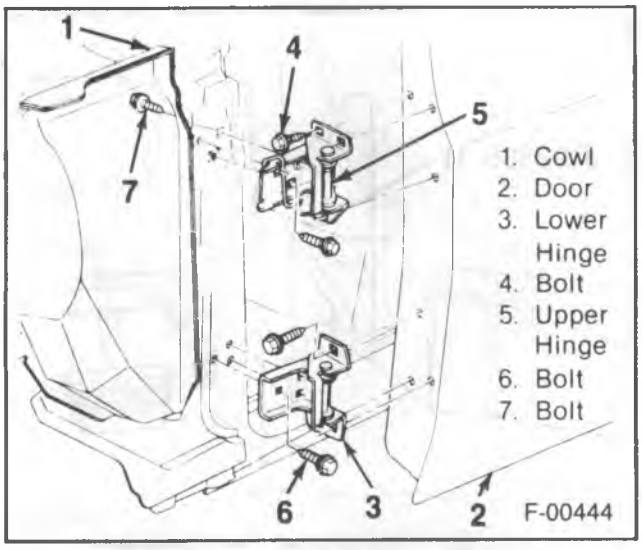

Figure 1—Door Hinge Components

DOOR ADJUSTMENT

Remove or Disconnect (Figures 2 through 5)

Tools Required:

J 29843-9 Wrench.

J 22585-01 Door Hinge Bolt Wrench.

- Door striker bolt using J 29843-9 (figure 4).
- Use tool J 22585-01 when loosening the door hinge to body side pillar bolts. The rear fender bolts may need to be loosened for access to these bolts (figure 5).

Adjust

- The door up or down, forward or rearward, and in or out, at the door hinges.

1. Adjust the door to obtain a gap of 6 mm [±] 2 mm (0.24-inch [±] 0.09-inch) between the rocker panel and the door.
2. The gap between the door and the roof panel should be 5 mm [±] 2 mm (0.19-inch [±] 0.09-inch).
3. Adjust the door to obtain a gap of 5 mm [±] 2 mm (0.19-inch [±] 0.09-inch) between the door's rear edge and the rear door pillar.
4. The gap between the door and the windshield pillar should be 2 mm [±] 1.5 mm (0.08-inch [±] 0.06-inch).
5. The door surface should be flush with the other panels with [±] 1.5 mm ([±] 0.06-inch) except for the door to roof panel surface which should be flush within + 1.5 mm (+ 0.06-inch).
6. Tighten the hinge bolts.

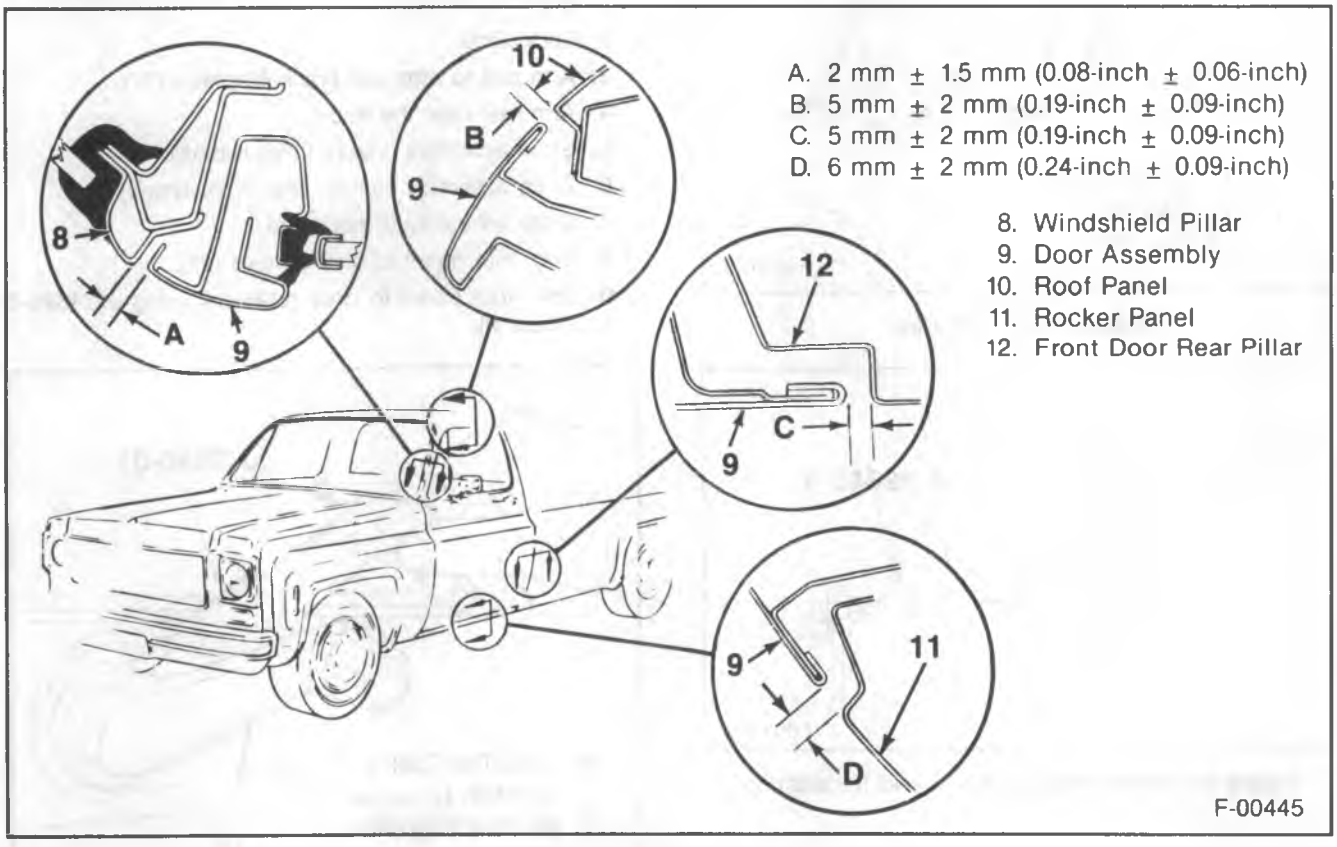

Figure 2—Door Adjustments

Install or Connect (Figures 2 through 5)

NOTICE: Refer to "Notice" on page 10A1-1 of this section.

- Door striker bolt.

Adjust

- Bolt to properly engage the door lock.

Tighten

- Striker bolt to 63 N·m (46 ft. lbs.).

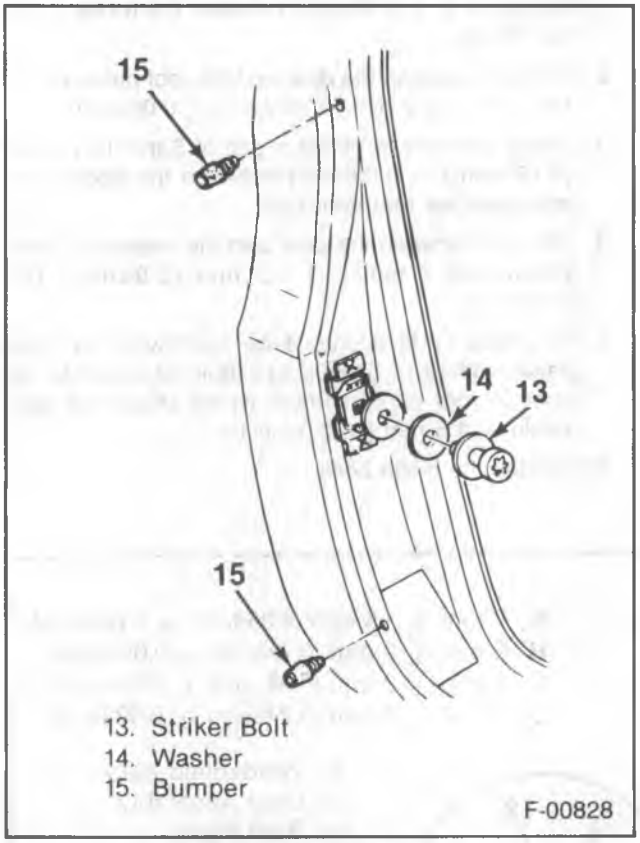

Figure 3—Door Striker

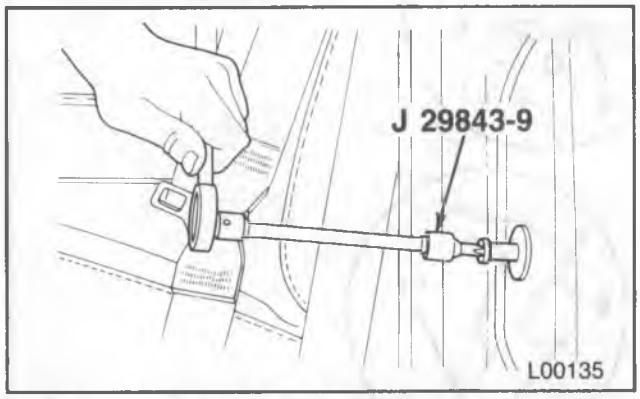

Figure 4—Striker Bolt Removal and Installation

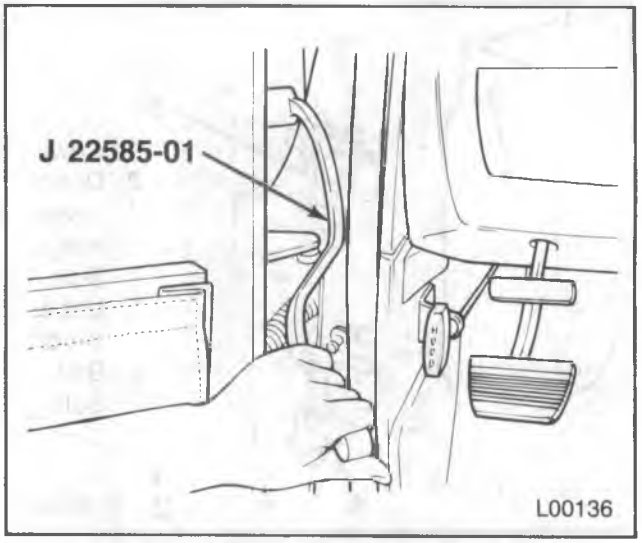

Figure 5—Door Hinge Bolt Wrench

DOOR TRIM PANEL REPLACEMENT

Remove or Disconnect (Figures 6 through 9)

Tools Required:

J 9886-01 Door Handle Clip Remover.

J 24595-B Door Trim Pad Clip Remover.

1. Window regulator handle using J 9886-01 (figures 6 and 7).
2. Lock knob.
3. Arm rest to arm rest bracket screws (77).
4. Arm rest from the door.
5. Strap assembly covers (if equipped0.
6. Strap assembly screws (24) (if equipped).
7. Strap assembly (if equipped).
8. Door trim panel to door screws (22).
9. Door trim panel to door retainers using J 24595-B (figure 9).

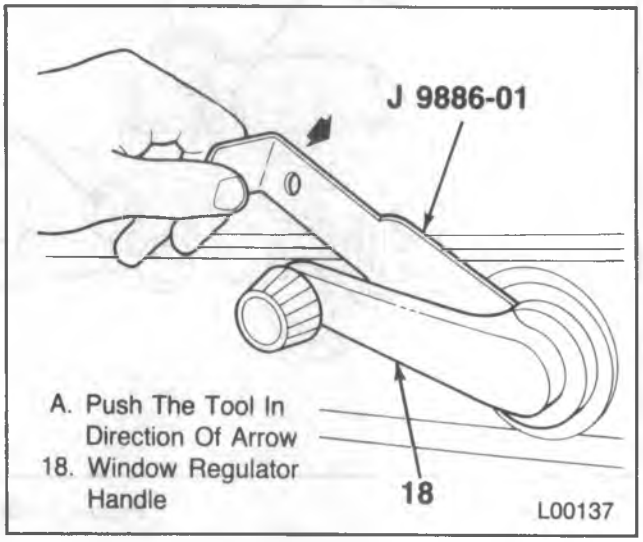

Figure 6—Handle Clip Remover

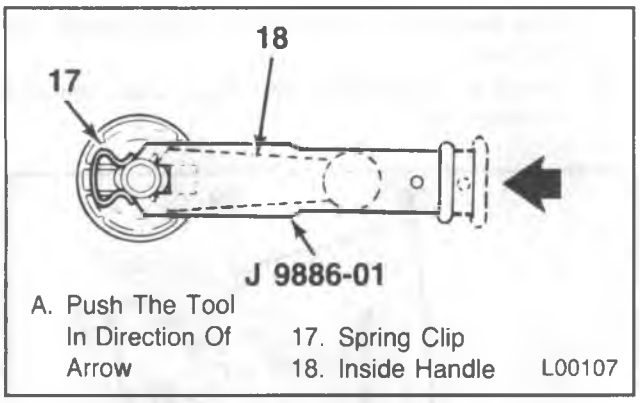

Figure 7—Handle Clip Remover, Rear View

10. Door trim panel from the door.
    - Pry the top of the panel away from the door side window seal clips.

Install or Connect (Figure 8)

- Check that all the trim retainers are securely fastened, and are not damaged. Replace any damaged fasteners.

1. Door trim panel onto the door side window seal clips.
2. Door trim retainers into the door panel.
3. Door trim panel to door screws (22).
4. Strap assembly onto the door (if equipped).
5. Strap assembly screws (if equipped).
6. Strap assembly covers (if equipped).
7. Arm rest to the door.
8. Arm rest to arm rest bracket screws (77).
9. Lock knob.
10. Window regulator handle.

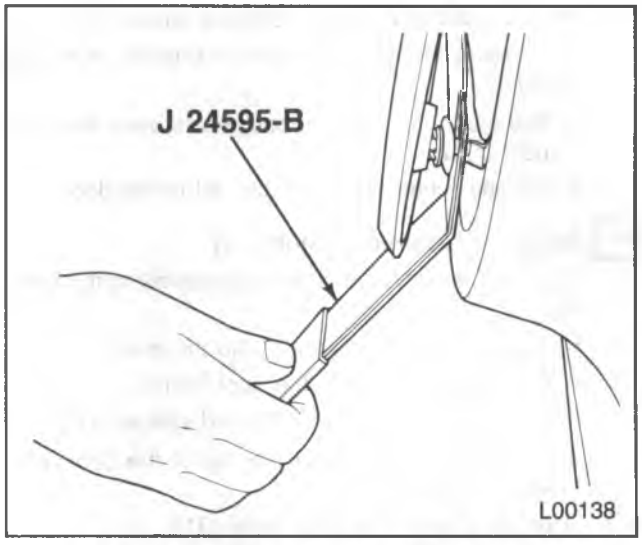

Figure 9—Door Trim Pad Clip Remover

DOOR VENT/WINDOW RUN CHANNEL ASSEMBLY REPLACEMENT

The door vent and the front window run channel are one assembly. This assembly is fit into the front of the door frame.

Remove or Disconnect (Figure 10)

- Place the window in the lowered position.

1. Door trim panel. Refer to "Door Trim Panel Replacement."
2. Run channel molding.
   - Pull the molding out of the vent assembly only.
3. Door panel to run channel bolt (31).

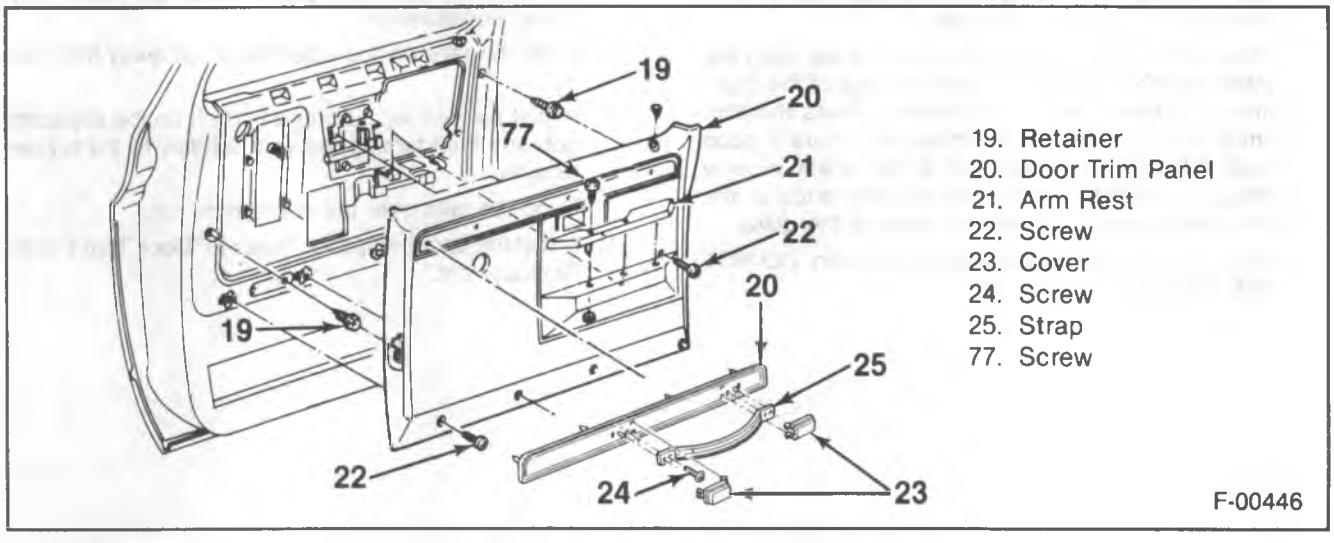

Figure 8—Trim Panel Components

4. Door to ventilator screws (26) and spacer (27).
5. Door vent/window run channel assembly from the vehicle.
   - Pull the top of the vent backwards away from the door frame.
   - Lift and rotate the assembly out of the door.

Install or Connect (Figure 10)

1. Door vent/window run channel assembly to the vehicle.
   - Rotate the vent assembly into the door.
   - Fit the assembly into the door frame.
2. Door to ventilator screws (26) and spacers (27).
   - Start with the screw at the top of the door, and work downward.
3. Door panel to run channel bolts (31).
4. Run channel molding.
   - Seat the clip into the vent, then push the remainder of the molding into the run channel.
5. Door trim panel. Refer to "Door Trim Panel Replacement."

VENT GLASS REPLACEMENT

CAUTION: Always wear heavy gloves when handling glass to minimize the risk of injury.

REMOVAL (Figure 10)

1. Open the vent window.
2. Squirt solvent on the tar-paper-like filler all around the glass channel, on both sides of the glass.
3. When the filler and sealer soften, pull the glass and the old filler from the channel.

INSTALLATION (Figure 10)

1. Thoroughly clean the inside of the glass channel with sandpaper to remove all rust and foreign matter.
2. Cut the new piece of glass channel filler 51 mm (2-inches) longer than required.
3. Position the filler (soap stoned side away from the glass) evenly around and over the edge of the glass that will be inserted in the channel. Press the filler firmly onto the edge of the glass to ensure a good bond. (Usually this is done with a mechanical window press.) Squeeze together the doubled ends of the filler which project beyond the edge of the glass.
4. Brush the inner channel with soap solution. DO NOT USE GREASE OR OIL.
5. Press the glass and the filler into the channel until firmly seated.
6. Trim off excess filler material around, and at the end of the channel.

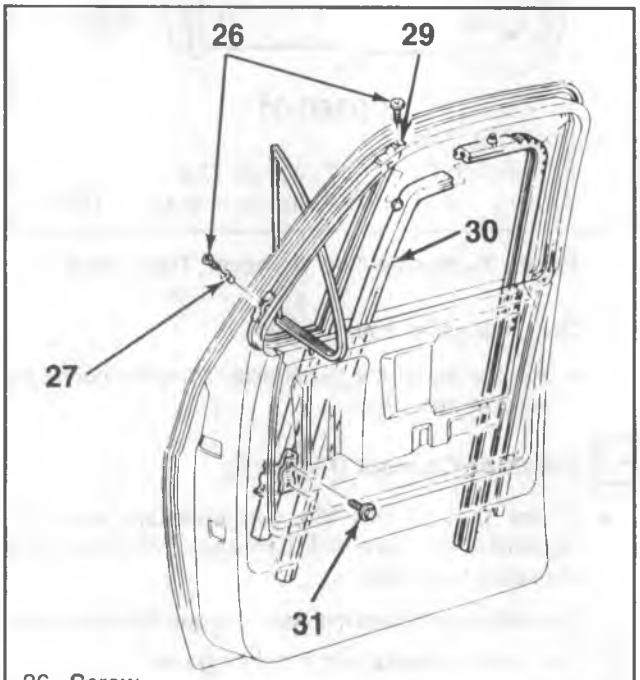

26. Screw
27. Spacer
29. Door Vent/Window Glass Run Assembly
30. Run Channel Molding
31. Bolt

L00109

Figure 10—Door Vent/Window Run Channel Components

VENT WINDOW ADJUSTMENT

Adjust (Figure 11)

1. Remove the door trim panel. Refer to "Door Trim Panel Replacement."
2. Bend the tabs on the adjustment nut away from the nut.
3. Adjust the vent by placing a wrench on the adjusting nut, and then turning the vent window to the proper tension.
4. Bend the tabs over the adjustment nut.
5. Install the door trim panel. Refer to "Door Trim Panel Replacement."

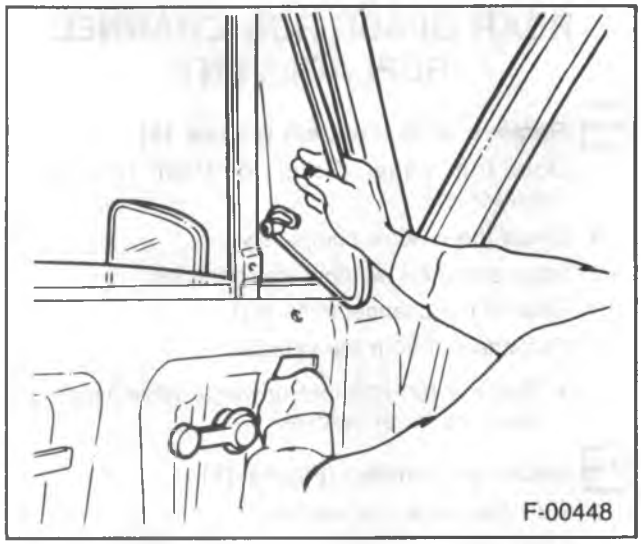

Figure 11—Vent Window Adjustment

DOOR WINDOW REPLACEMENT

Remove or Disconnect (Figure 12)

CAUTION: Always wear heavy gloves when handling glass to minimize the risk of injury.

- Lower the glass to the bottom of the door.

1. Door trim panel. Refer to "Door Trim Panel Replacement."
2. Door vent/window run channel assembly. Refer to "Door Vent/Window Run Channel Assembly Replacement."

- Mask or cover any sharp edges that could scratch the glass.

3. Door window glass.
   - Slide the glass forward until the front roller is in line with the notch in the sash channel. Disengage the roller from the channel.
   - Push the window forward, then tilt it up until the rear roller is disengaged.
   - Place the window in a level position, and raise it straight up and out of the door.

Install or Connect (Figure 12)

1. Door window glass.
   - Lower the window into the door frame.
   - Push the window forward, then tilt it up, and slide the rear roller into the sash channel.
   - Slide the glass backward until the front roller is in line with the notch in the sash channel. Engage the roller to the sash channel.
   - Slide the glass rearward into the glass run channel.

- Remove any masking or covering.

2. Door vent/window run channel assembly. Refer to "Door Vent/Window Run Channel Assembly Replacement."
3. Door trim panel. Refer to "Door Trim Panel Replacement."

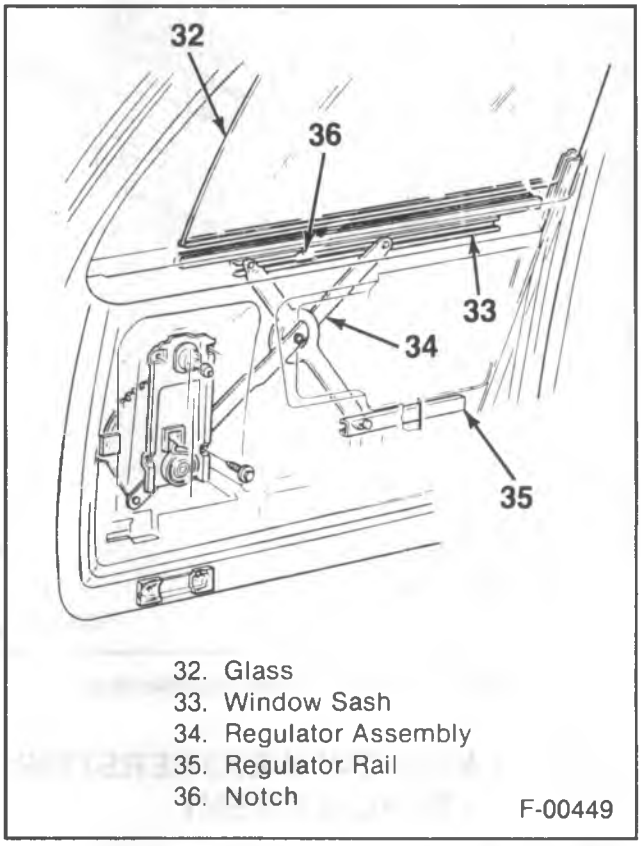

Figure 12—Window Assembly Components

INNER WINDOW WEATHERSTRIP REPLACEMENT

Remove or Disconnect (Figure 13)

1. Door trim panel. Refer to "Door Trim Panel Replacement."
2. Weatherstrip (37) from the trim panel.
   - Pry the clips on the weatherstrip from the trim panel shoulder.

Install or Connect (Figure 13)

1. Weatherstrip (37) to the trim panel.
   - Push the weatherstrip clips onto the trim panel shoulder.
2. Door trim panel. Refer to "Door Trim Panel Replacement."

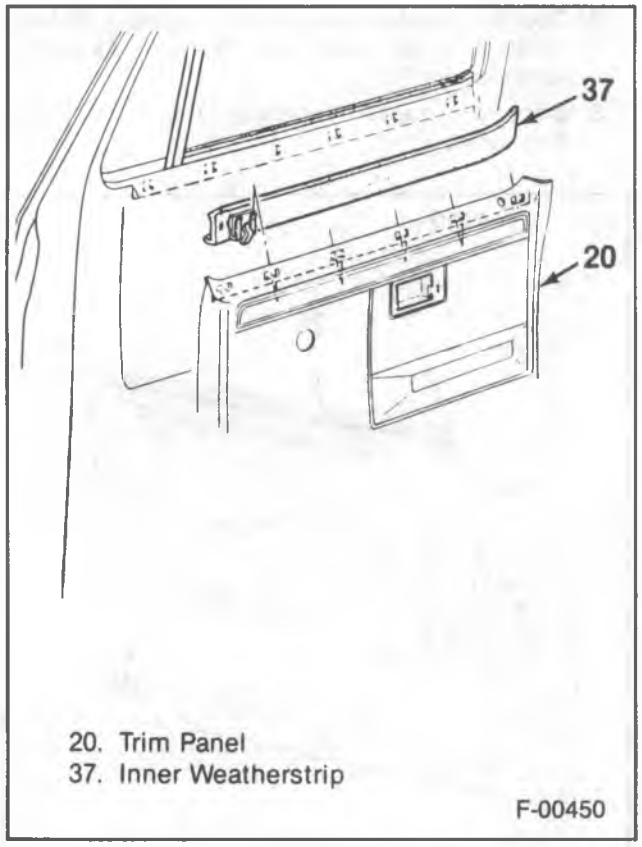

Figure 13—Inner Window Weatherstrip

OUTER WINDOW WEATHERSTRIP REPLACEMENT

Remove or Disconnect (Figure 14)

- Lower the window.
- Weatherstrip (38) from the door.
  - Pry the weatherstrip clips from the door panel.

Install or Connect (Figure 14)

- Weatherstrip (38) to the door.
  - Push the weatherstrip clips onto the door panel.

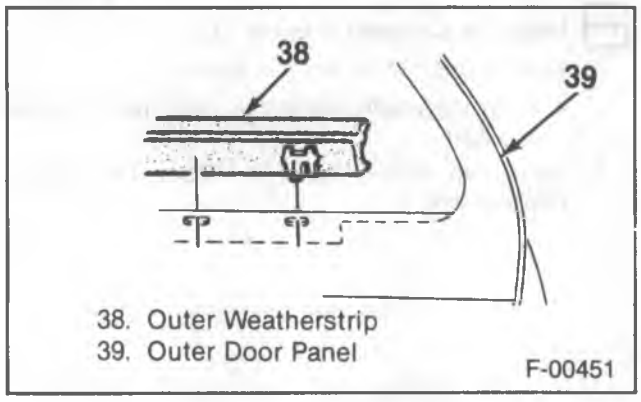

Figure 14—Outer Window Weatherstrip

REAR GLASS RUN CHANNEL REPLACEMENT

Remove or Disconnect (Figure 15)

1. Door trim panel. Refer to "Door Trim Panel Replacement."
- Lower the window completely.
2. Inner and outer window weatherstrips.
3. Door to run channel bolts (41).
4. Run channel from the vehicle.
   - Pull the run channel upwards while twisting to clear the lower bracket.

Install or Connect (Figure 15)

1. Run channel to the vehicle.
   - Work the run channel into the door frame. Be certain that the glass is in the channel.
2. Lower door to run channel bolt (41).
- Raise the window completely.
3. Upper door to run channel bolt (41).
4. Inner and outer window weatherstrips.
5. Door trim panel. Refer to "Door Trim Panel Replacement."

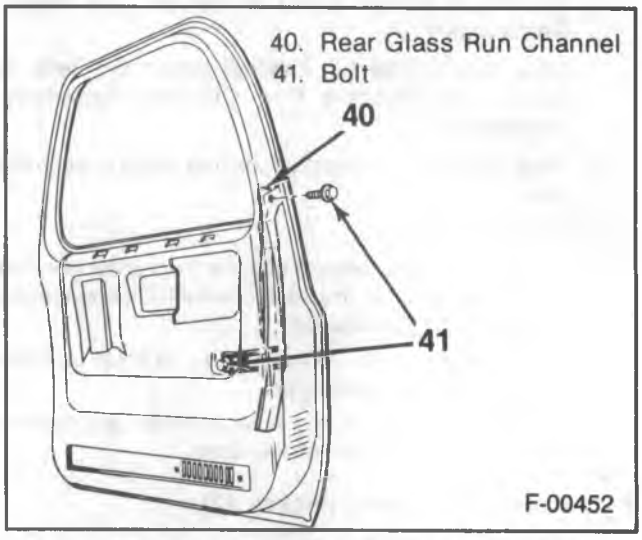

Figure 15—Rear Glass Run Channel Components

WINDOW REGULATOR REPLACEMENT

MANUAL REGULATOR

Remove or Disconnect (Figure 16)

- Raise the window and tape the glass in the full up position using cloth body tape.
1. Door trim panel. Refer to "Door Trim Panel Replacement."
2. Door panel to regulator bolts (42).
3. Window regulator.

- Slide the regulator rearward to disengage the rear roller from the sash channel. Also disengage the lower roller from the regulator rail.
- Disengage the forward roller from the sash channel at the notch in the sash channel.
- Collapse the regulator, and remove it through the access hole in the door.

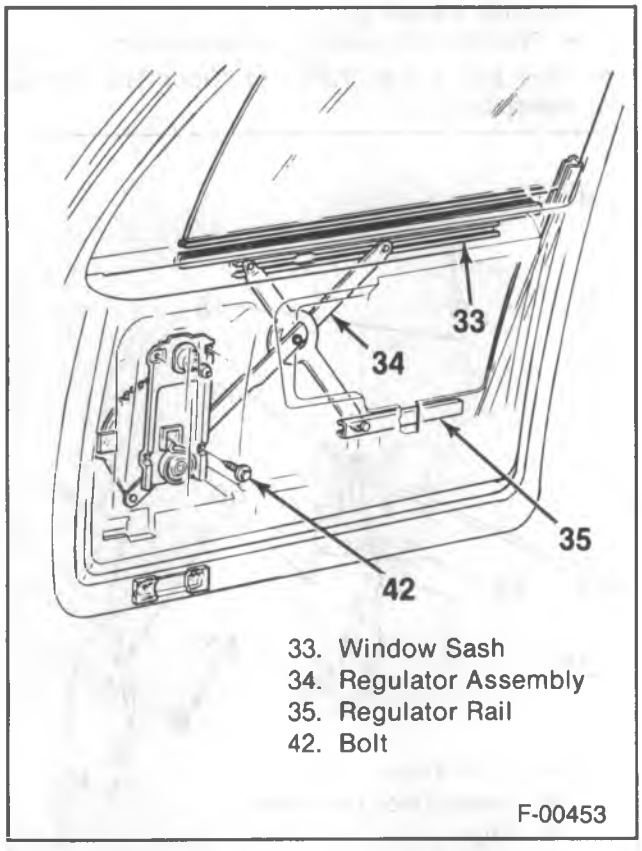

Figure 16—Manual Window Regulator

Install or Connect (Figure 16)

- Lubricate the regulator and the sash and regulator rails with lubriplate or equivalent.

1. Window regulator.
   - Collapse the regulator, and insert it through the access hole in the door.
   - Unfold the regulator, and engage the forward roller to the sash channel at the sash channel notch.
   - Slide the regulator rearward to engage the rear roller to the sash channel. Also engage the lower roller to the regulator rail.
   - Slide the regulator into its proper position, and insert the regulator drive through the door panel.
2. Door panel to regulator bolts (42).
3. Door trim panel. Refer to "Door Trim Panel Replacement."

- Remove the tape from the window.

POWER REGULATOR

For the diagnosis of power window circuits, refer to CAB ELECTRICAL (SEC. 8A).

Remove or Disconnect (Figures 16 and 17)

- Raise the window and tape the glass in the full up position using cloth body tape.

1. Battery ground cable.
2. Door trim panel. Refer to "Door Trim Panel Replacement."
3. Control to door trim panel bolts.
   - Lay the control aside.
4. Regulator to door panel bolts (45) and nuts (44).
5. Wiring harness from the regulator.
6. Window regulator.
   - Slide the regulator rearward to disengage the rear roller from the sash channel. Also disengage the lower roller from the regulator rail.
   - Disengage the forward roller from the sash channel at the notch in the sash channel.
   - Collapse the regulator, and remove it through the access hole in the door.

CAUTION: The next step must be performed when the regulator is removed from the door. The regulator lift arms are under tension from the counterbalance spring and can cause serious injury if the motor is removed without locking the sector gear in position.

- Drill a hole through the regulator sector gear and back plate. Drill the hole at least 12.7 mm (1/2-inch) away from the edge of the sector gear or back plate. Install a pan head sheet metal tapping screw at least 19 mm (3/4-inch) long into the drilled hole to lock the sector gear in place.

7. Motor to regulator attaching bolts (28).
8. Motor from the regulator.

Install or Connect (Figures 16 and 17)

- Lubricate the motor drive gear and regulator sector teeth.

1. Regulator motor to regulator.
   - The motor pinion gear teeth must mesh properly with the sector gear teeth before installing the motor to regulator screws.
2. Regulator motor to regulator bolts (28).
   - Remove the sheet metal screw from the back plate and sector gear.
3. Window regulator to the door.
   - Collapse the regulator, and insert it through the access hole in the door.
   - Unfold the regulator, and engage the forward roller to the sash channel at the sash channel notch.
   - Slide the regulator rearward to engage the rear roller to the sash channel. Also engage the roller to the regulator rail.
   - Slide the regulator into its proper position.
4. Wiring harness to the regulator.
5. Regulator to door panel bolts (45) and nuts (44).
6. Remote control to door trim panel bolts.

7. Door trim panel. Refer to "Door Trim Panel Replacement."
8. Battery ground cable.

- Remove the tape from the window.

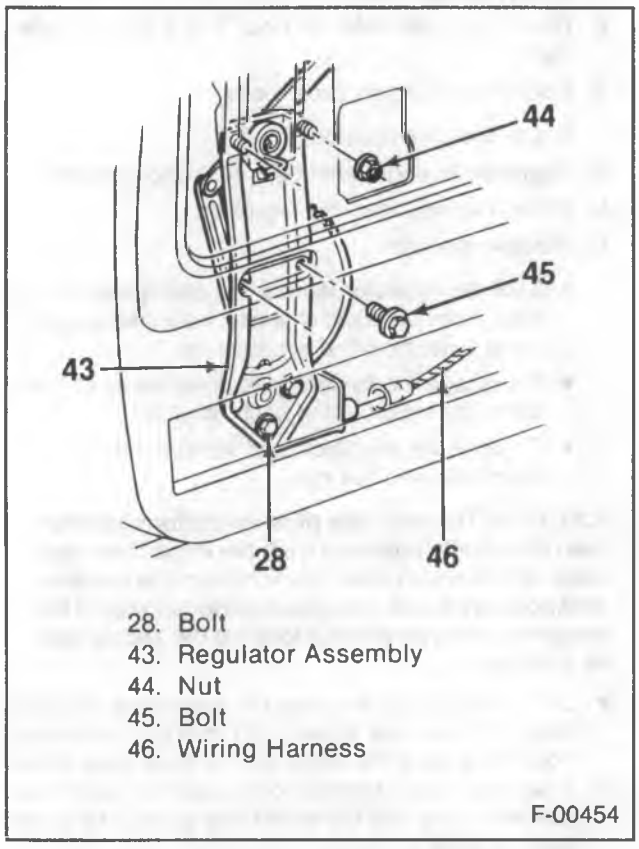

Figure 17—Power Window Regulator

DOOR LOCK REPLACEMENT

Remove or Disconnect (Figure 18)

- Raise the window completely.

1. Door trim panel. Refer to "Door Trim Panel Replacement."
2. Inside door handle to lock rod clips (49).
   - Using a flat-bladed screwdriver, push on the top of the clip where it is connected to the rod. Pivot the clip away from the rod.
3. Inside door handle to lock rod from the lock.
4. Outside door handle to lock rod clip.
   - Use the procedure given under step 2.
5. Outside door handle to lock rod from the lock.
6. Inside door lock knob.
7. Door to lock assembly screws (52).
8. Lock assembly from the door.
   - Tilt the lock assembly away from the outside lock cylinder. Pull the lock assembly downward to make clearance for the inside lock rod.

Install or Connect (Figure 18)

1. Lock assembly to the door.
   - Align the inside lock rod to the hole in the door panel. Tilt the lock assembly onto the outside lock cylinder.
2. Door to lock assembly screws (52).
3. Inside door lock knob.
4. Outside door handle to lock rod onto the lock assembly.
5. Clip onto the lock rod.
   - Pivot the clip up and onto the lock rod.
6. Inside door handle is lock rod onto the lock assembly.
7. Clip onto the lock rod.
   - Pivot the clip up and onto the lock rod.
8. Door trim panel. Refer to "Door Trim Panel Replacement."

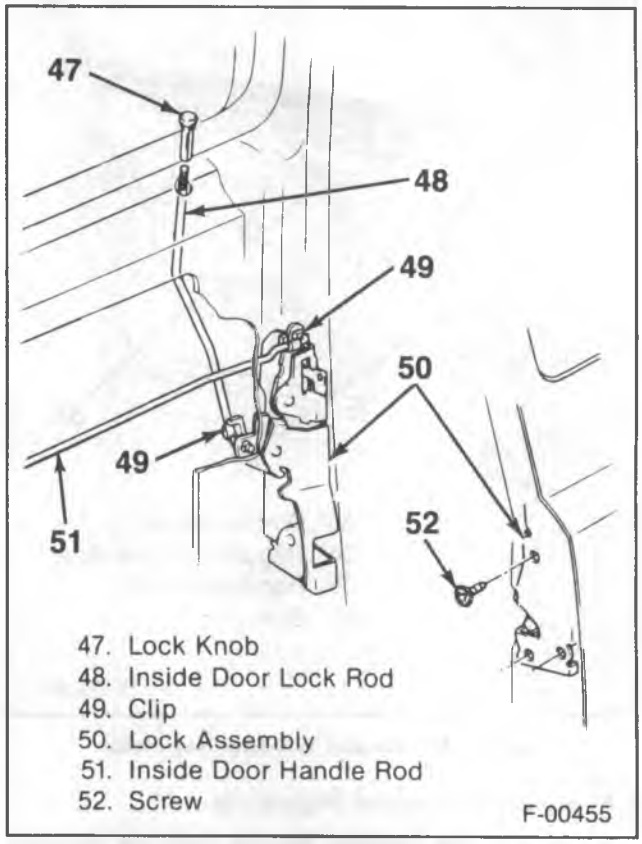

Figure 18—Door Lock Components

POWER DOOR LOCK MOTOR REPLACEMENT

Refer to CAB ELECTRICAL (SEC. 8A) for electrical diagnosis of the door lock motor.

Remove or Disconnect (Figure 19)

1. Battery ground cable.
2. Door trim panel. Refer to "Door Trim Panel Replacement."
3. Electrical connector from the motor.
4. Door to motor screws (78).
5. Motor from the lock rod.
   - Slide the rubber mount at the top of the motor off of the door lock rod.
6. Motor from the door.

Install or Connect (Figure 19)

1. Motor into the door.

2. Motor to the lock rod.
   - Slide the rubber mount at the top of the motor onto the door lock rod.
3. Door to motor screws (78).
4. Electrical connector to the motor.
5. Door trim panel. Refer to "Door Trim Panel Replacement."
6. Battery ground cable.

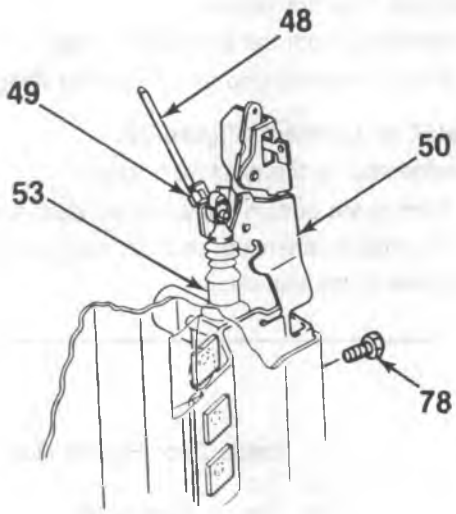

48. Inside Door Lock Rod
49. Clip
50. Lock Assembly
53. Motor Assembly
78. Screw

F-00456

Figure 19—Power Door Lock Motor

DOOR OUTSIDE HANDLE REPLACEMENT

Remove or Disconnect (Figure 20)

- Raise the window completely.

1. Door trim panel. Refer to "Door Trim Panel Replacement."
2. Outside door handle to lock rod clip.
   - Using a flat bladed screwdriver, push on the top of the clip where it is connected to the rod. Pivot the clip away from the rod.
3. Outside door handle to lock rod from the lock.
4. Door to outside handle screws (54).
5. Handle with the control rod from the door.
6. Gaskets from the door.

Install or Connect (Figure 20)

1. Large gasket over the lock rod and onto the handle.
2. Handle with the lock rod onto the door.
3. Door to outside handle screw (54) to the push button side of the handle.
   - Do not tighten.
4. Small gasket between the door and the handle.
5. Door to outside handle screw (54) to the other side of the handle.
   - Tighten both screws.
6. Outside door handle to lock rod to the lock assembly.
7. Clip onto the lock rod.
   - Pivot the clip up and onto the lock rod.
8. Door trim panel. Refer to "Door Trim Panel Replacement."

DOOR LOCK CYLINDER REPLACEMENT

Remove or Disconnect (Figure 20)

- Raise the window completely.

1. Door trim panel. Refer to "Door Trim Panel Replacement."
2. Lock cylinder retaining clip (62) from the cylinder.
   - Slide the clip off the cylinder with a screwdriver.
3. Lock cylinder and gasket from the door.

Install or Connect (Figure 20)

1. Lock cylinder with gasket to the door.
   - The cylinder rod must engage the lock assembly lever.
2. Lock cylinder (62) retaining clip onto the cylinder.
3. Door trim panel. Refer to "Door Trim Panel Replacement."

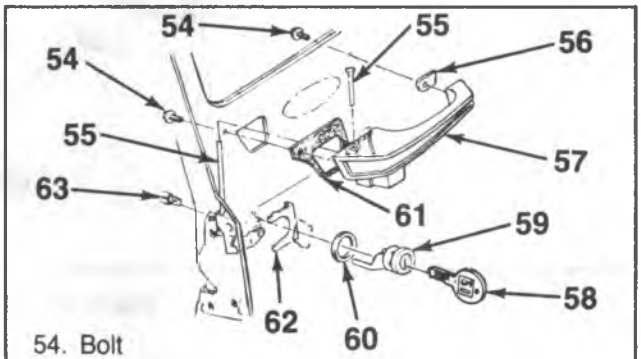

54. Bolt
55. Outside Handle Rod
56. Small Gasket
57. Handle Assembly
58. Key
59. Lock Cylinder
60. Gasket
61. Large Gasket
62. Retainer
63. Clip

F-00457

Figure 20—Outside Handle and Lock Cylinder Components

DOOR INSIDE HANDLE REPLACEMENT

Remove or Disconnect (Figure 21)

1. Door trim panel. Refer to "Door Trim Panel Replacement."
2. Door handle set.
3. Handle to door screws (65).
4. Control rod from the inside handle.
   - Slide the clip so that the large diameter slot is in line with the lock rod. Then, pull the rod from the handle.
5. Inside handle from the door.

Install or Connect (Figure 21)

1. Control rod to the inside handle.
   - Place the rod into the clip and the lever. Slide the clip so that the small diameter slot is in line with the lock rod.
2. Handle to door screws (65).
3. Door handle seal.
4. Door trim panel. Refer to "Door Trim Panel Replacement."

DOOR WEATHERSTRIP REPLACEMENT

Remove or Disconnect (Figure 22)

- Open the door.

1. Sill plate from the vehicle.
2. Weatherstrip from the pinchweld flange.
   - Pull the weatherstrip away from the flange.

Install or Connect (Figure 22)

1. Weatherstrip to the pinchweld flange.
   - Start at the bottom center of the door opening.
   - Trim the weatherstrip, and butt the ends together.
2. Sill plate to the vehicle.

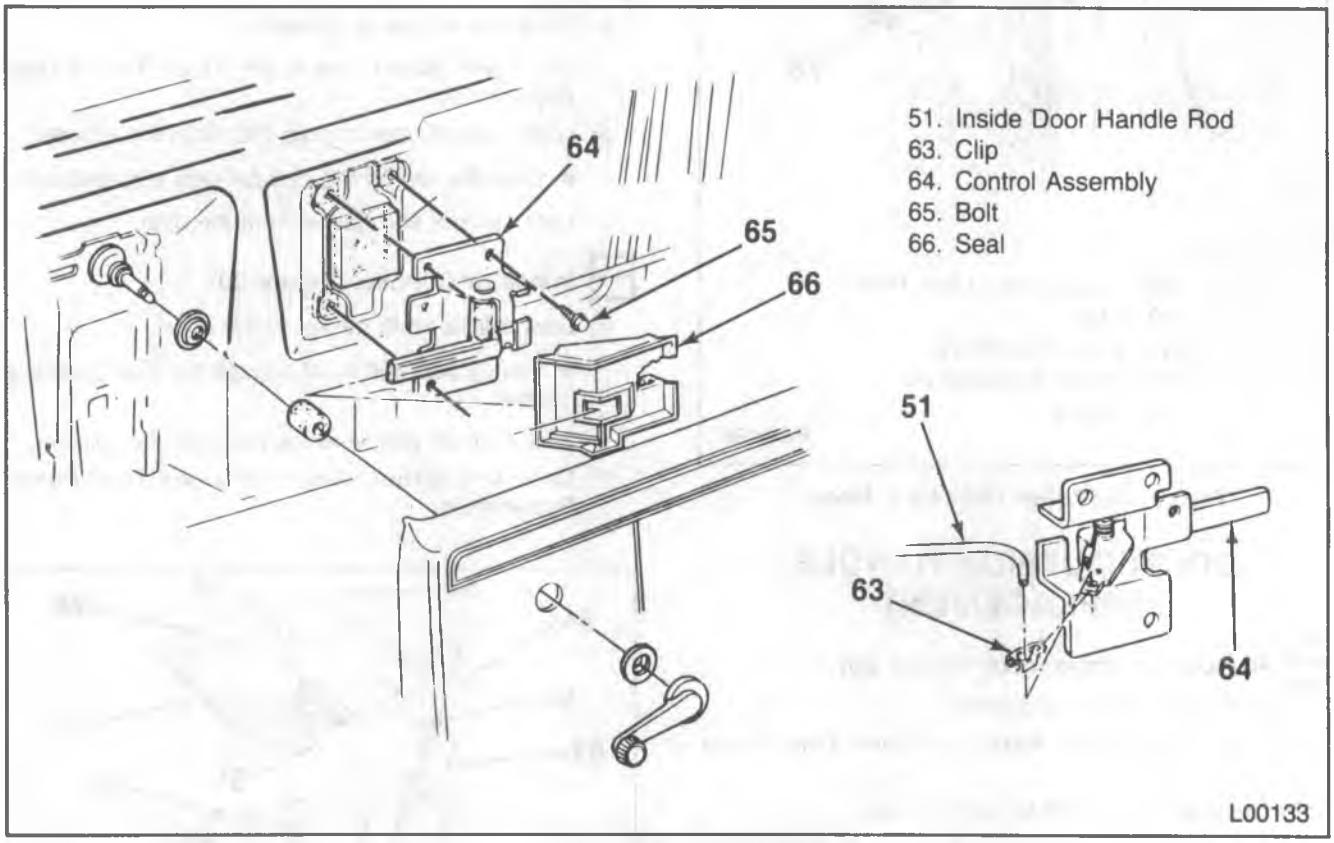

Figure 21—Door Inside Handle

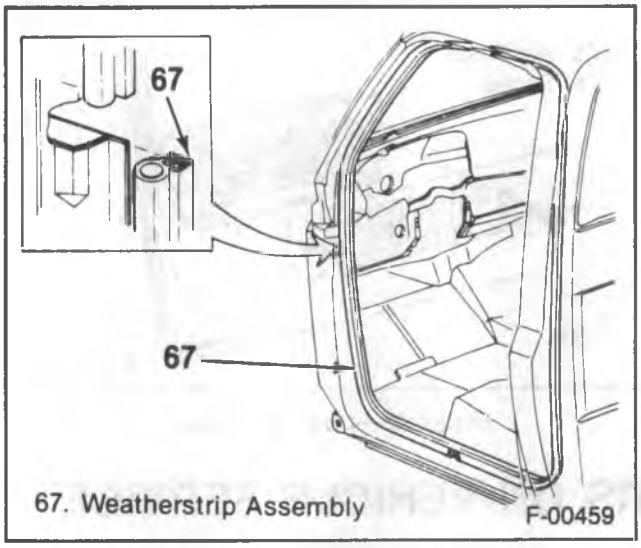

Figure 22—Front Door Weatherstrip

OUTSIDE REAR VIEW MIRROR REPLACEMENT

Remove or Disconnect (Figure 23)

1. Mirror to bracket screw.
2. Mirror from the door.
3. Bracket to door bolts.
4. Bracket and gasket from the vehicle.

Install or Connect (Figure 23)

1. Bracket and gasket to the vehicle.
2. Bracket to door bolts.
3. Mirror to the bracket.
4. Mirror to bracket screw.

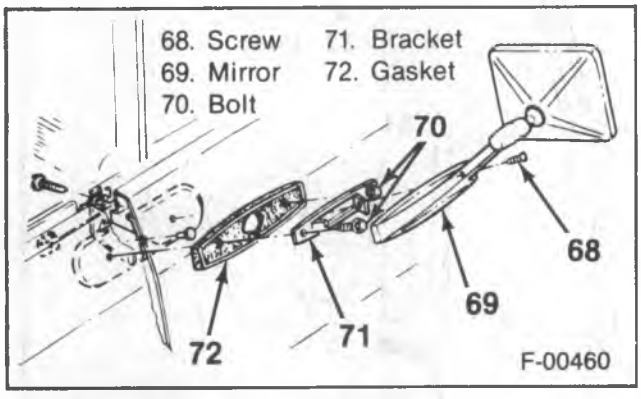

Figure 23—Outside Rear View Mirror Components

BELOW EYELINE OUTSIDE REAR VIEW MIRROR REPLACEMENT

Remove or Disconnect (Figure 24)

1. Mirror cover screw.
- Lift the cover, and pivot the mirror toward the window.
2. Mirror to door bolts.
3. Mirror and seal from the door.

Install or Connect (Figure 24)

1. Mirror and seal to the door.
2. Mirror to door bolts.
- Pivot the mirror away from the window, and lower the mirror cover.
3. Mirror cover screw.

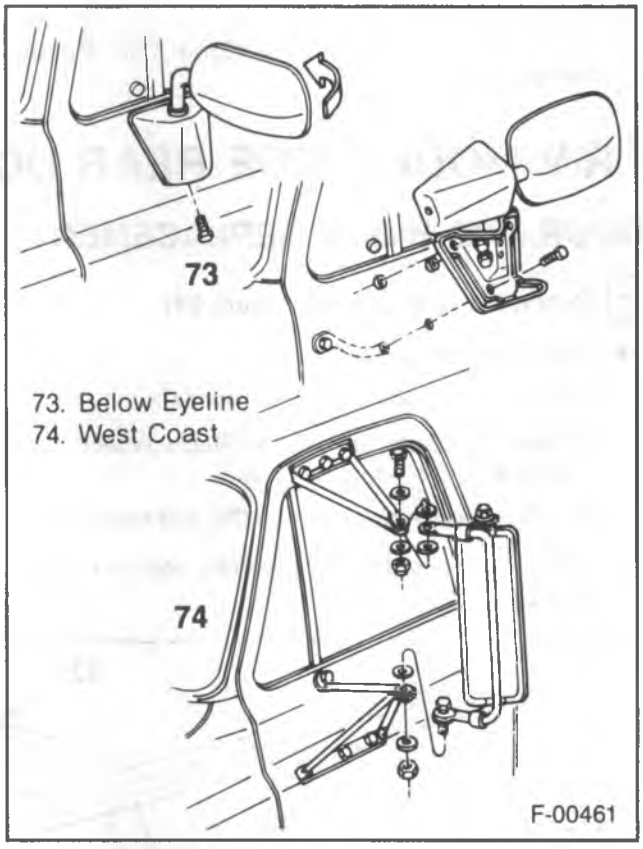

Figure 24—Below Eyeline and West Coast Style Mirrors

WEST COAST OUTSIDE REAR VIEW MIRROR REPLACEMENT

Remove or Disconnect (Figure 24)

1. Mirror bracket to door bracket nuts, bolts, and bushings.
2. Mirror bracket from the vehicle.
3. Door bracket nuts and bolts.
4. Brackets from the door.

Install or Connect (Figure 24)

1. Door brackets to the door.
2. Door bracket nuts and bolts.
3. Mirror bracket to the door brackets.
4. Mirror bracket to door bracket nuts, bolts, and bushings.

DOOR AIR VALVE REPLACEMENT

Remove or Disconnect (Figure 25)

1. Door trim panel. Refer to "Door Trim Panel Replacement."
2. Door to air valve screws.
3. Air valve from the door.

Install or Connect (Figure 25)

1. Air valve to the door.
2. Door to air valve screws.
3. Door trim panel. Refer to "Door Trim Panel Replacement."

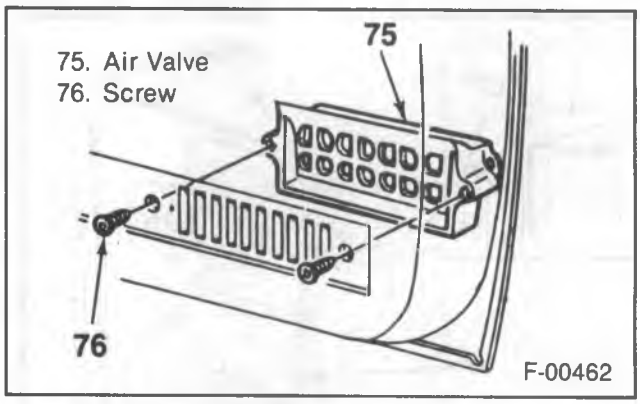

Figure 25—Door Air Valve

R/V MODEL SIDE REAR DOORS ON-VEHICLE SERVICE

DOOR AND HINGE REPLACEMENT

Remove or Disconnect (Figure 26)

- Open the door.

1. Electrical wiring harness (if equipped).
   - Refer to "Door Trim Panel Replacement" for access to the wiring harness.
2. Inner hinge pillar cover screws (78) and covers (79).
   - Mark the position of the hinges on the door and on the door pillar.
3. Hinge to door pillar bolts (80).
4. Door from the vehicle.
5. Hinge to door bolts (80).
6. Hinges from the door.

Install or Connect (Figure 26)

1. Hinges to the door.
   - Align the hinges with the previously made marks.
2. Hinge to door bolts (80).

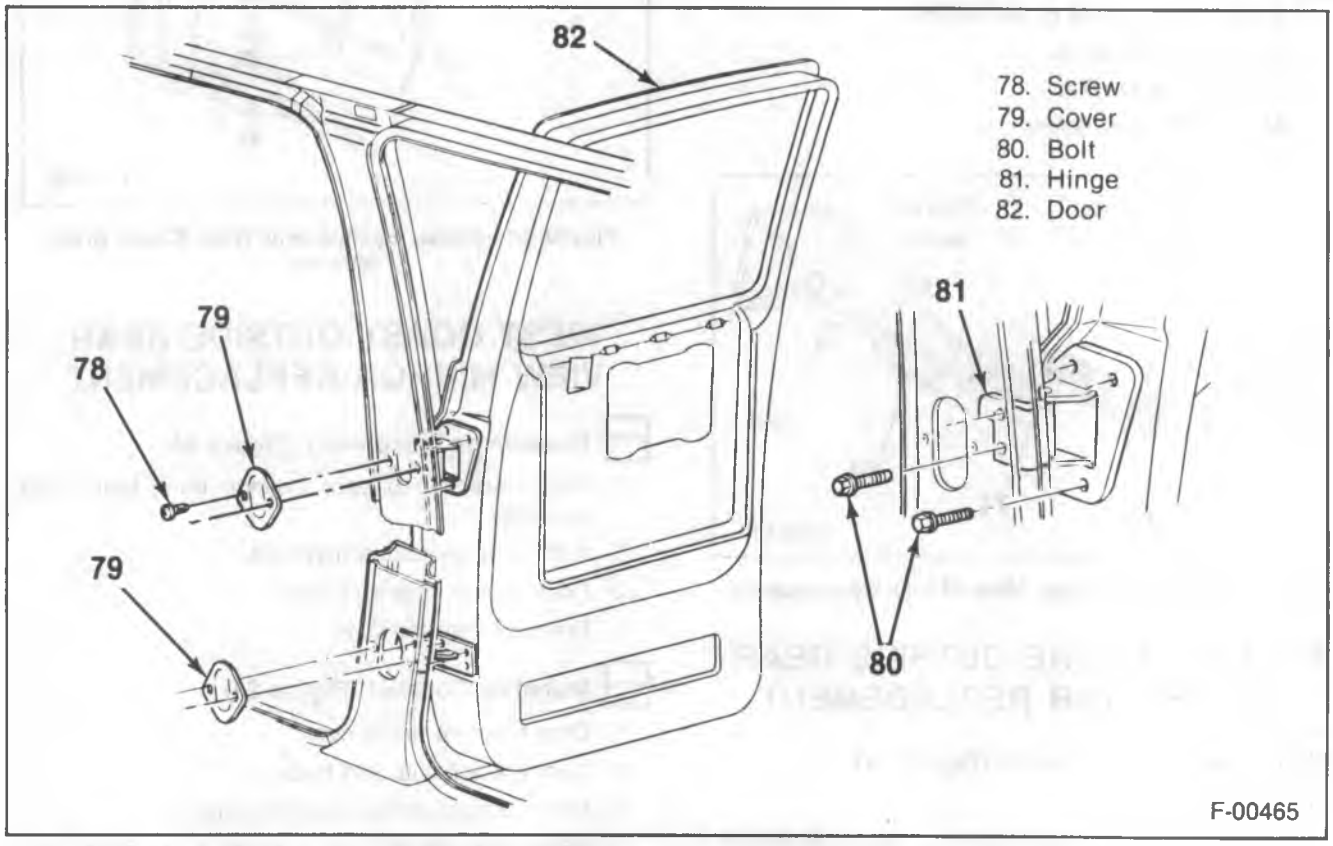

Figure 26—Door Hinge Components

3. Door to the vehicle.
   - Align the hinges with the previously made marks.
4. Hinge to door pillar bolts (80).
5. Inner hinge pillar covers (79) and screws (78).
6. Electrical wiring harness (if equipped).
   - Refer to "Door Trim Panel Replacement" for access to the wiring harness.

DOOR ADJUSTMENT

Remove or Disconnect

Tool Required:

J 29843-9 Wrench

- Door striker bolt using J 29843-9 (figure 4).

Adjust (Figure 27)

- The door up and down, forward or rearward, and in or out, at the door hinges.

1. Adjust the door to obtain a gap of 6 mm [±] 2 mm (0.24-inch [±] 0.09-inch) between the rocker panel and the door.
2. The gap between the door and the roof panel should be 5 mm [±] 2 mm (0.19-inch [±] 0.09-inch).
3. Adjust the door to obtain a gap of 5 mm [±] 2 mm (0.19-inch [±] 0.09-inch) between the door's rear edge and the rear door pillar.
4. The gap between the door and the center pillar should be 5 mm [±] 2 mm (0.19-inch [±] 0.09-inch).
5. The door surface should be flush with the other panels within [±] 1.5 mm ([±] 0.06-inch) except for the door to roof panel surface which should be flush within + 1.5 mm (+ 0.06-inch).

Install or Connect

NOTICE: Refer to "Notice" on page 10A1-1 of this section.

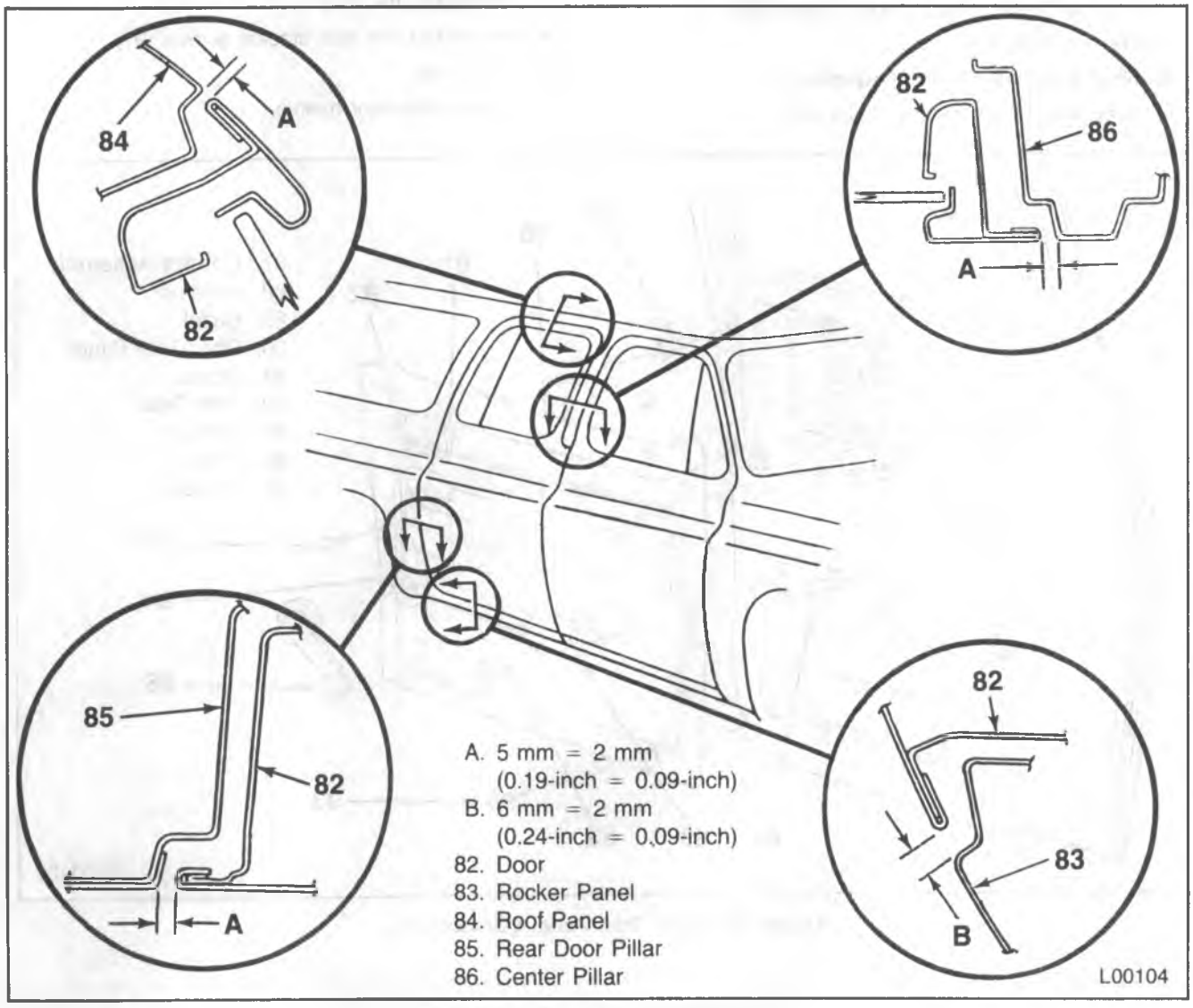

Figure 27—Door Adjustments

- Door striker bolt.

Adjust

- Bolt to properly engage the door lock.

Tighten

- Striker bolt to 63 N·m (46 ft. lbs.).

DOOR TRIM PANEL REPLACEMENT

Remove or Disconnect (Figure 28)

Tools Required:

J 9886-01 Door Handle Clip Remover.
J 24595-B Door Trim Pad Clip Remover.

1. Window regulator handle using J 9886-01 (figures 6 and 7).
2. Lock knob.
3. Arm rest to arm rest bracket screws (91).
4. Arm rest from the door.
5. Strap assembly covers (if equipped).
6. Strap assembly screws (if equipped).
7. Strap assembly (if equipped).
8. Door trim panel to door screws (93).
9. Door trim panel to door retainers using J 24595-B (figure 9).
10. Door trim panel from the door.
    - Pry the top of the panel away from the door side window seal clips.

Install or Connect (Figure 28)

- Check that all the trim retainers are securely fastened, and are not damaged. Replace any damaged fasteners.

1. Door trim panel onto the door side window seal clips.
2. Door trim retainers into the door panel.
3. Door trim panel to door screws (93).
4. Strap assembly onto the door (if equipped).
5. Strap assembly screws (if equipped).
6. Strap assembly covers (if equipped).
7. Arm rest to the door.
8. Arm rest to arm rest bracket screws (91).
9. Lock knob.
10. Window regulator handle.

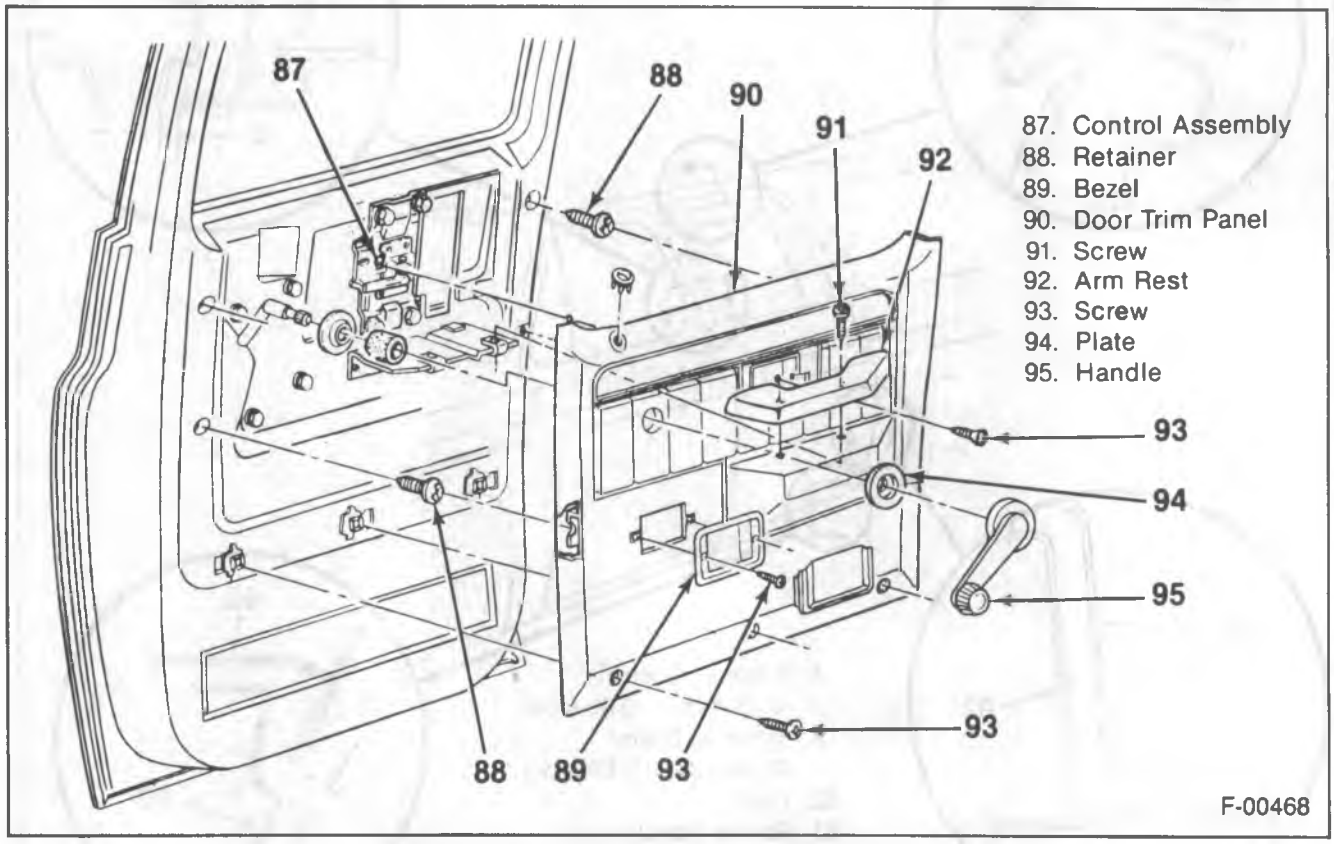

Figure 28—Door Trim Panel Components

STATIONARY GLASS/WINDOW RUN CHANNEL ASSEMBLY REPLACEMENT

The stationary glass and the rear window run channel are one assembly. This assembly fits into the rear of the door frame.

Remove or Disconnect (Figure 29)

- Place the window in the lowered position.

1. Door trim panel. Refer to "Door Trim Panel Replacement."
2. Run channel molding (96).
   - Pull the molding out of the run channel only.
3. Door panel to run channel bolt (99).
4. Door frame to run channel screw (97).

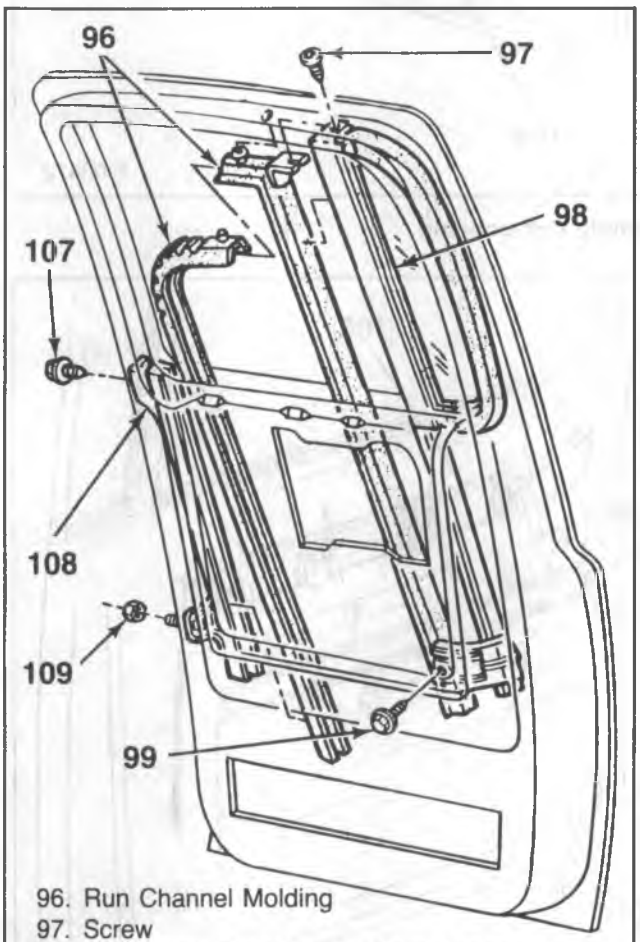

96. Run Channel Molding
97. Screw
98. Stationary Glass/Window Run Channel
99. Bolt
107. Bolt
108. Front Glass Run Channel
109. Nut

F-00469

Figure 29—Stationary Glass/Window Run Channel Components

5. Stationary glass/window run channel assembly from the door.
   - Pull the top of the channel backwards away from the door frame.
   - Lift and rotate the assembly out of the door.

Install or Connect (Figure 29)

1. Stationary glass/window run channel assembly to the door.
   - Rotate the vent assembly into the door.
   - Fit the assembly into the door frame.
2. Run channel molding.
   - Push the molding into the run channel. The slot at the top of the molding must be on top of the run channel.
3. Door frame to run channel screw (97).
   - The screw must pass through the run channel molding slot.
4. Door panel to run channel bolt (99).
5. Door trim panel. Refer to "Door Trim Panel Replacement."

DOOR WINDOW REPLACEMENT

Remove or Disconnect (Figure 30)

CAUTION: Always wear heavy gloves when handling glass to minimize the risk of injury.

- Lower the window to the bottom of the door.

1. Door trim panel. Refer to "Door Trim Panel Replacement."
2. Stationary glass/window run channel assembly. Refer to "Stationary Glass/Window Run Channel Assembly Replacement."

- Mask or cover any sharp edges that could scratch the glass.

3. Door window glass (100).
   - Slide the glass rearward until the rear roller is in line with the notch in the sash channel. Disengage the roller from the channel.
   - Push the window rearward, then tilt it up until the front roller is disengaged.
   - Place the window in a level position, and raise it straight up and out of the door.

Install or Connect (Figure 30)

1. Door window glass (100).
   - Lower the window into the door frame.
   - Push the window rearward, then tilt it up, and slide the front roller into the sash channel.
   - Slide the glass forward until the rear roller is in line with the notch in the sash channel. Engage the roller to the sash channel.
   - Slide the glass forward into the glass run channel.

- Remove any masking or covering.

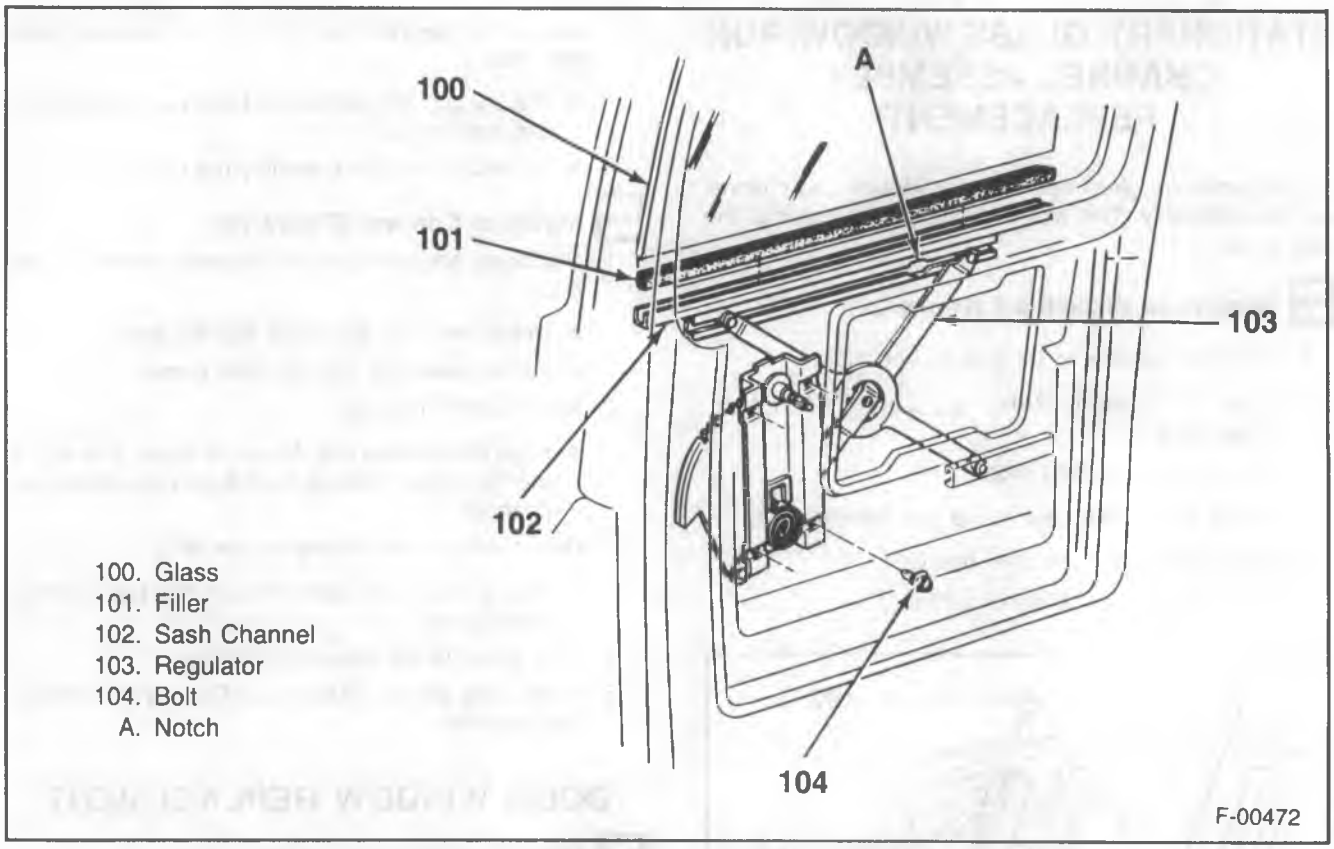

Figure 30—Window Assembly Components

2. Stationary glass/window run channel assembly. Refer to "Stationary Glass/Window Run Channel Assembly Replacement."
3. Door trim panel. Refer to "Door Trim Panel Replacement."

INNER WINDOW WEATHERSTRIP REPLACEMENT

Remove or Disconnect (Figure 31)

1. Door trim panel. Refer to "Door Trim Panel Replacement."
2. Weatherstrip from the trim panel.
   - Pry the clips on the weatherstrip from the trim panel shoulder.

Install or Connect (Figure 31)

1. Weatherstrip to the trim panel.
   - Push the weatherstrip clips onto the trim panel shoulder.
2. Door trim panel. Refer to "Door Trim Panel Replacement."

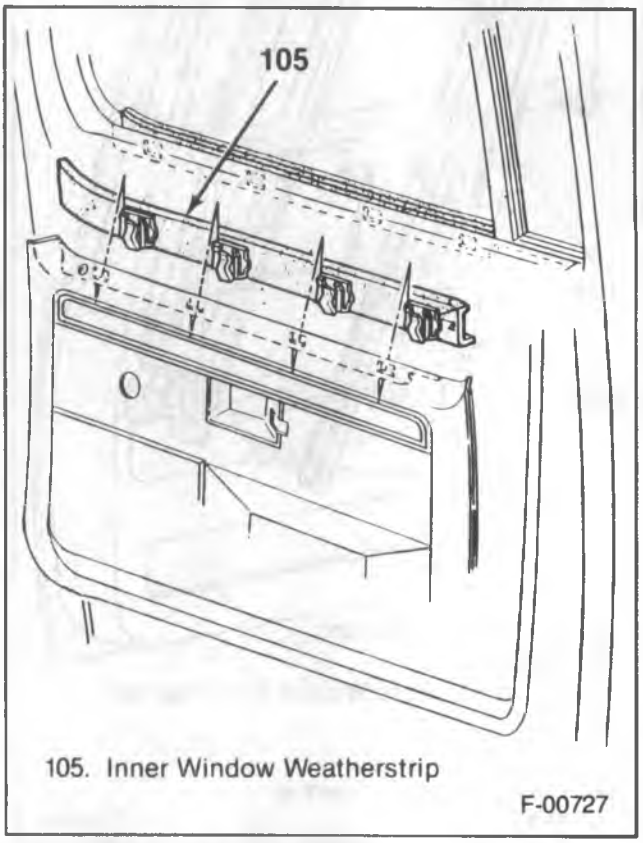

Figure 31—Inner Window Weatherstrip

OUTER WINDOW WEATHERSTRIP REPLACEMENT

Remove or Disconnect (Figure 32)

- Lower the window.
- Weatherstrip from the door.
  - Pry the weatherstrip clips from the door panel.

Install or Connect (Figure 32)

- Weatherstrip to the door.
  - Push the weatherstrip clips onto the door panel.

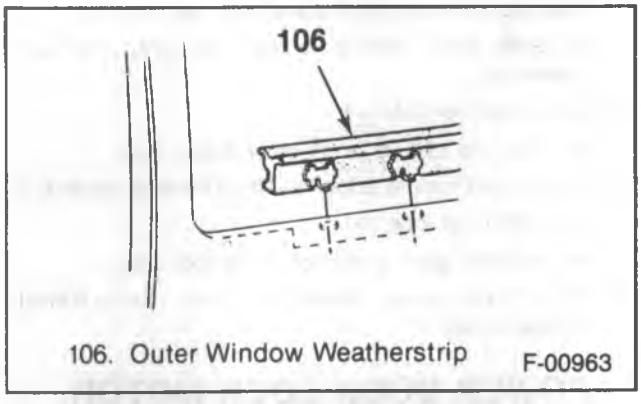

Figure 32—Outer Window Weatherstrip

FRONT GLASS RUN CHANNEL REPLACEMENT

Remove or Disconnect (Figure 29)

- Lower the window completely.

1. Outer window weatherstrip.
2. Door to run channel bolt (107) and nut (109).
3. Run channel from the vehicle.
   - Pull the run channel upwards while twisting to clear the lower bracket.

Install or Connect (Figure 29)

1. Run channel to the vehicle.
   - Work the run channel into the door frame. Be certain that the glass is in the channel.
2. Door to run channel bolt (107) and nut (109).
3. Outer window weatherstrip.

WINDOW REGULATOR REPLACEMENT

MANUAL REGULATOR

Remove or Disconnect (Figure 30)

1. Door trim panel. Refer to "Door Trim Panel Replacement."
2. Door window. Refer to "Door Window Replacement."
3. Door panel to regulator bolts (104).
4. Window regulator.
   - Collapse the regulator, and remove it through the access hole in the door.

Install or Connect (Figure 30)

- Lubricate the regulator and the sash and regulator rails with lubriplate or equivalent.

1. Window regulator.
   - Collapse the regulator, and insert it through the access hole in the door.
2. Door panel to regulator bolts (104).
3. Door windows. Refer to "Door Window Replacement."
4. Door trim panel. Refer to "Door Trim Panel Replacement."

POWER REGULATOR

For the diagnosis of power window circuits, refer to CAB ELECTRICAL (SEC. 8A).

Remove or Disconnect (Figure 33)

1. Battery ground cable.
2. Door trim panel. Refer to "Door Trim Panel Replacement."
3. Door window. Refer to "Door Window Replacement."
4. Regulator to door panel bolts (110) and nuts (112).
5. Wiring harness from the regulator.
6. Window regulator.
   - Collapse the regulator, and remove it through the access hole in the door.

CAUTION: The next step must be performed when the regulator is removed from the door. The regulator lift arms are under tension from the counterbalance spring and can cause serious injury if the motor is removed without locking the sector gear in position.

- Drill a hole through the regulator sector gear and back plate. Drill the hole at least 12.7 mm (1/2-inch) away from the edge of the sector gear or back plate. Install a pan head sheet metal tapping screw at least 19 mm (3/4-inch) long into the drilled hole to lock the sector gear in place.

7. Motor to regulator attaching screws.
8. Motor from the regulator.

Install or Connect (Figure 33)

- Lubricate the motor drive gear and regulator sector teeth.

1. Regulator motor to regulator.
   - The motor pinion gear teeth must mesh properly with the sector gear teeth before installing the motor to regulator screws.
2. Regulator motor to regulator screws.

- Remove the sheet metal screw from the back plate and sector gear.

3. Window regulator to the door.
   - Collapse the regulator, and insert it through the access hole in the door.
4. Wiring harness to the regulator.
5. Regulator to door panel bolts (110) and nuts (112).
6. Door window. Refer to "Door Window Replacement."
7. Door trim panel. Refer to "Door Trim Panel Replacement."
8. Battery ground cable.

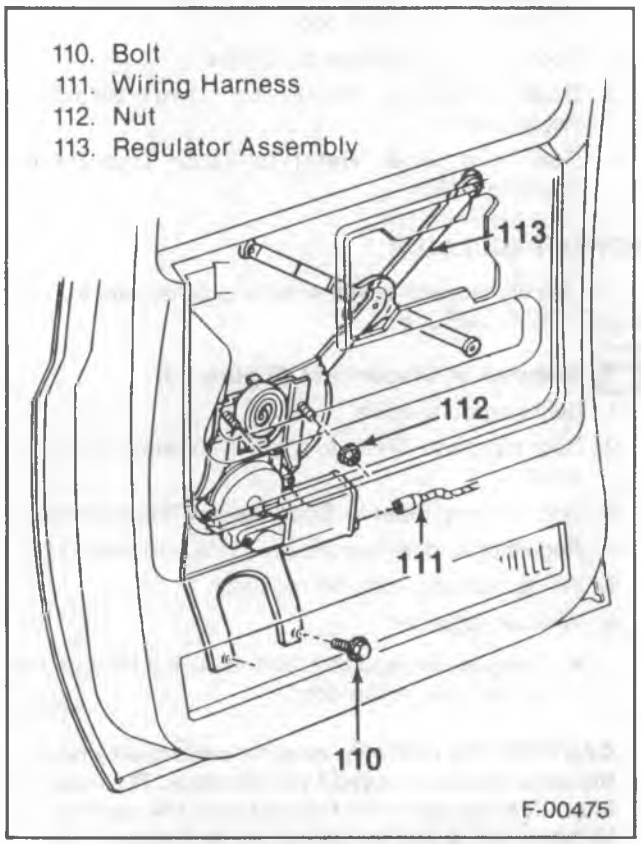

Figure 33—Power Regulator

DOOR LOCK REPLACEMENT

Remove or Disconnect (Figure 34)

- Raise the window completely.

1. Door trim panel. Refer to "Door Trim Panel Replacement."
2. Inside door handle to lock rod clip (115).
   - Using a flat bladed screwdriver, push on the top of the clip where it is connected to the rod. Pivot the clip away from the rod.
3. Inside door handle to lock rod from the lock.
4. Outside door handle to lock rod clip.
   - Use the procedure given under step 2.
5. Outside door handle to lock rod from the lock.
6. Remove control to lock assembly clip and rod.
7. Door to lock assembly screws (116).
8. Lock assembly from the door.
   - Tilt the lock assembly away from the outside lock cylinder. Pull the lock assembly downward to make clearance for the inside lock rod.

Install or Connect (Figure 34)

1. Lock assembly to the door.
   - Tilt the lock assembly onto the outside lock cylinder.
2. Door to lock assembly screws (116).
3. Remote control to lock assembly rod and clip.
4. Outside door handle to lock rod onto the lock assembly.
5. Clip onto the lock rod.
   - Pivot the clip up and onto the lock rod.
6. Inside door handle to lock rod onto the lock assembly.
7. Clip onto the lock rod.
   - Pivot the clip up and onto the lock rod.
8. Door trim panel. Refer to "Door Trim Panel Replacement."

POWER DOOR LOCK MOTOR REPLACEMENT

Refer to CAB ELECTRICAL (SEC. 8A) for electrical diagnosis of the door lock motor.

Remove or Disconnect (Figure 34)

1. Battery ground cable.
2. Door trim panel. Refer to "Door Trim Panel Replacement."
3. Electrical connector from the motor.
4. Door to motor screws.
5. Motor from the lock rod.
   - Slide the rubber mount at the top of the motor off of the door lock rod.
6. Motor from the door.

Install or Connect (Figure 34)

1. Motor into the door.
2. Motor to the lock rod.
   - Slide the rubber mount at the top of the motor onto the door lock rod.
3. Door to motor screws.
4. Electrical connector to the motor.
5. Door trim panel. Refer to "Door Trim Panel Replacement."
6. Battery ground cable.

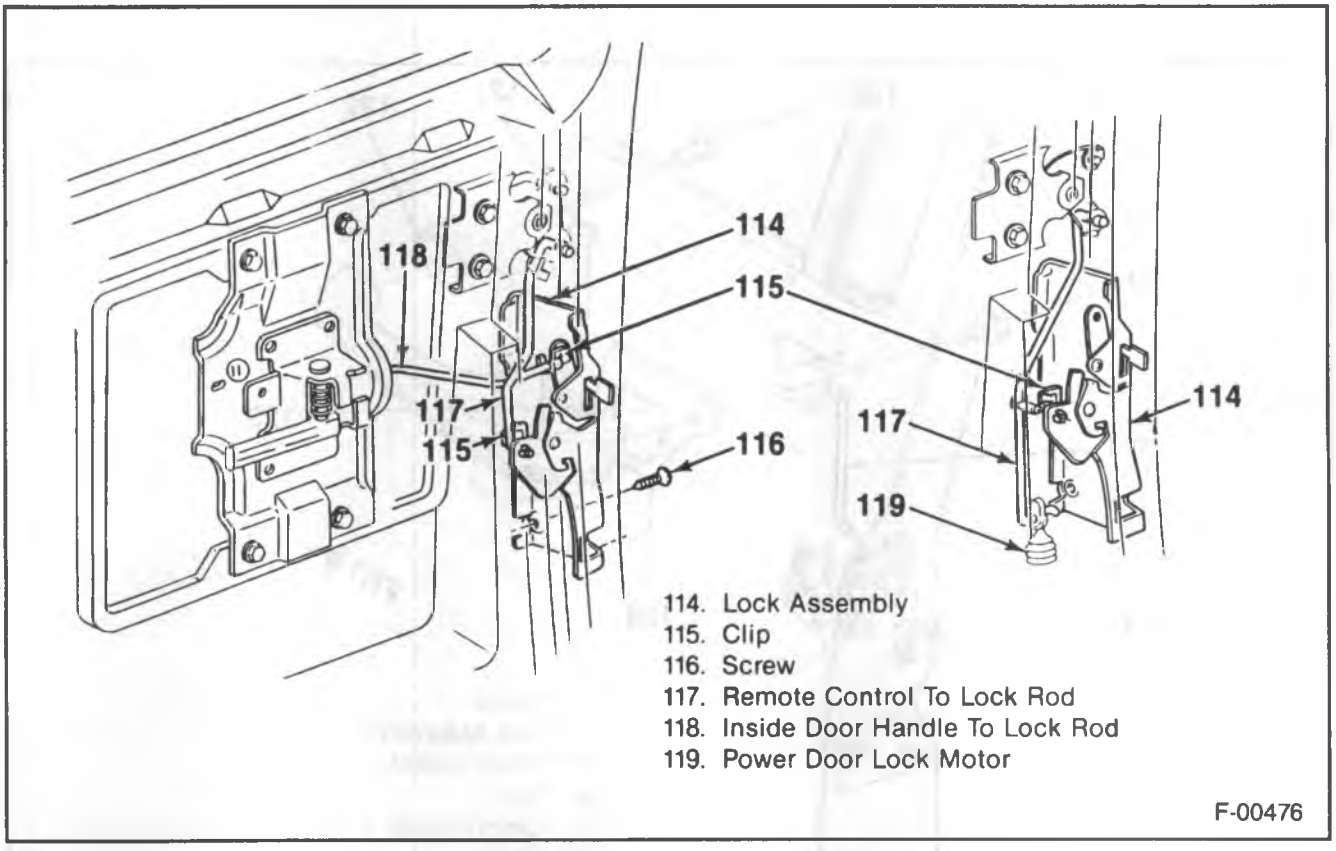

Figure 34—Door Lock Components

DOOR OUTSIDE HANDLE REPLACEMENT

Remove or Disconnect (Figure 35)

- Raise the window completely.

1. Door trim panel. Refer to "Door Trim Panel Replacement."
2. Outside door handle to lock rod clip.
   - Using a flat bladed screwdriver, push on the top of the clip where it is connected to the rod. Pivot the clip away from the rod.
3. Outside door handle to lock rod from the lock.
4. Door to outside handle screws (174).
5. Handle with the control rod from the door.
6. Gaskets from the door.

Install or Connect (Figure 35)

1. Large gasket over the lock rod and onto the handle.
2. Handle with the lock rod onto the door.
3. Door to outside handle screw (174) to the push button side of the handle.
   - Do not tighten.
4. Small gasket between the door and the handle.
5. Door to outside handle screw (174) to the other side of the handle.
   - Tighten both screws.
6. Outside door handle to lock rod to the lock assembly.
7. Clip onto the lock rod.
   - Pivot the clip up and onto the lock rod.
8. Door trim panel. Refer to "Door Trim Panel Replacement."

DOOR INSIDE HANDLE REPLACEMENT

Remove or Disconnect (Figure 36)

1. Door trim panel. Refer to "Door Trim Panel Replacement."
2. Door handle seal.
3. Handle assembly to door screws (131).
4. Control rod from the inside handle.
   - Slide the clip so that the large diameter slot is in line with the lock rod. Then, pull the rod from the handle.
5. Inside handle from the door.

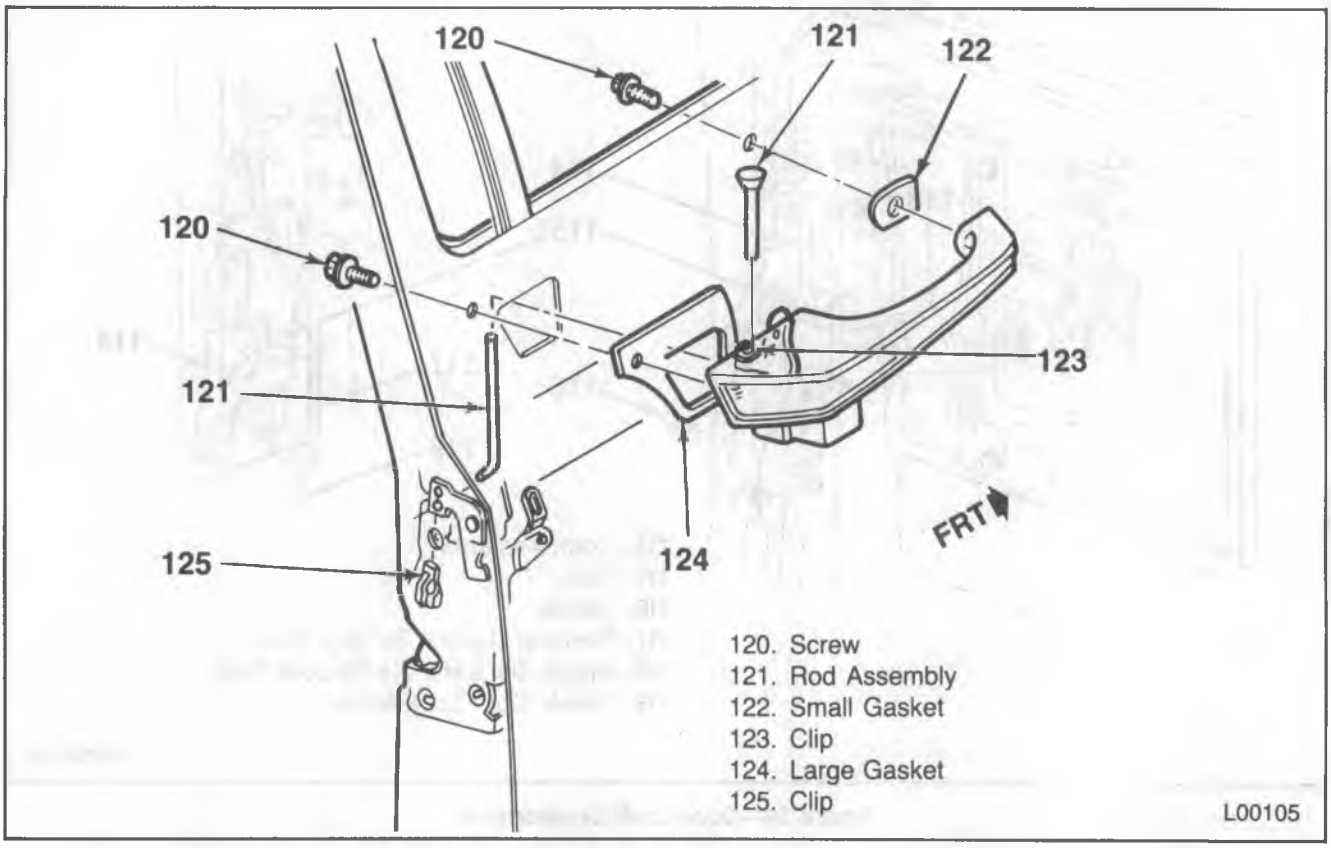

Figure 35—Door Outside Handle Components

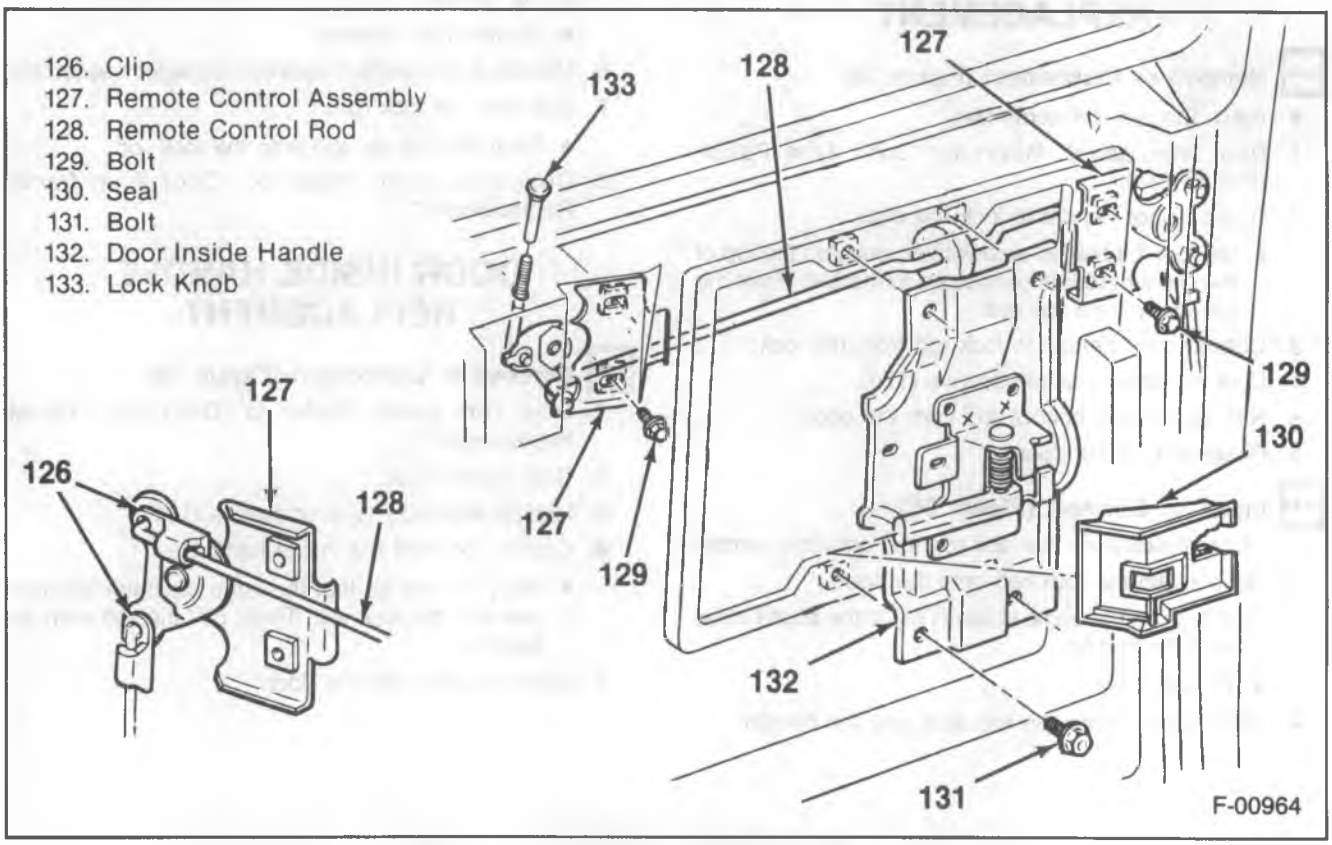

Figure 36—Door Inside Handle Components

Install or Connect (Figure 36)

1. Control rod to the inside handle.
   - Place the rod into the clip and the lever. Slide the clip so that the small diameter slot is in line with the lock rod.
2. Handle assembly to door screws (131).
3. Door handle set.
4. Door trim panel. Refer to "Door Trim Panel Replacement."

REMOTE CONTROL REPLACEMENT

Remove or Disconnect (Figure 36)

1. Door trim panel. Refer to "Door Trim Panel Replacement."
2. Remote control to lock assembly rod.
   - Using a flat bladed screwdriver, push on the top of the clip where it is connected to the rod. Pivot the clip away from the rod.
   - Pull the rod from the remote control.
3. Door panel to remote control bolts (129).
4. Remote control levers and rods through the access hole.

Install or Connect (Figure 36)

1. Remote control levers and rods through the access hole.
2. Door panel to remote control bolts (129).
3. Remote control to lock assembly rod.
   - Pivot the clip up and onto the lock rod.
4. Door trim panel. Refer to "Door Trim Panel Replacement."

DOOR WEATHERSTRIP REPLACEMENT

Remove or Disconnect (Figure 37)

- Open the door.

1. Sill plate from the vehicle.
2. Weatherstrip from the pinchweld flange.

Install or Connect (Figure 37)

1. Weatherstrip to the pinchweld flange.
   - Start at the bottom center of the door opening.
   - Trim the weatherstrip, and butt the ends together.
2. Sill plate to the vehicle.

DOOR AIR VALVE REPLACEMENT

Remove or Disconnect (Figure 38)

1. Door trim panel. Refer to "Door Trim Panel Replacement."
2. Door to air valve screws.
3. Air valve from the door.

Install or Connect (Figure 38)

1. Air valve to the door.
2. Door to air valve screws.
3. Door trim panel. Refer to "Door Trim Panel Replacement."

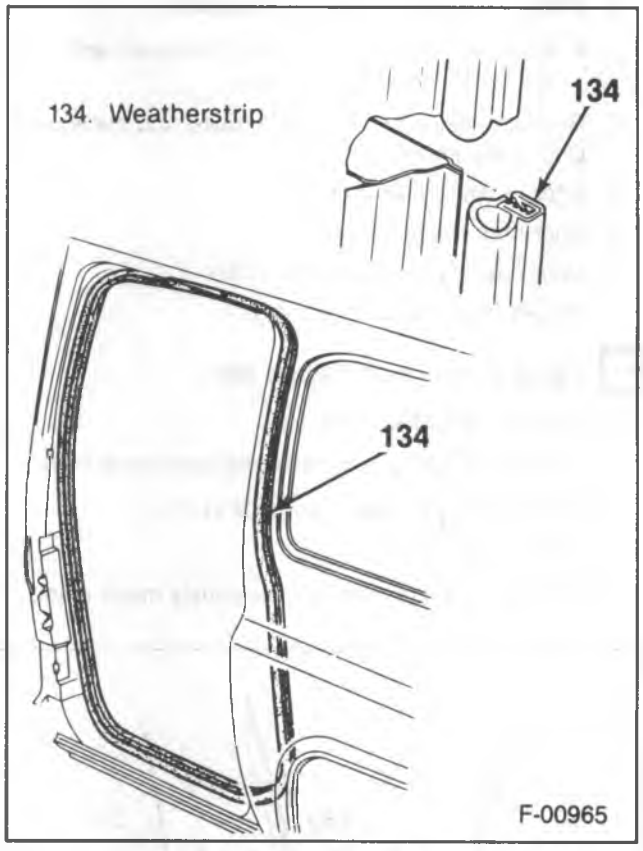

Figure 37—Door Weatherstrip

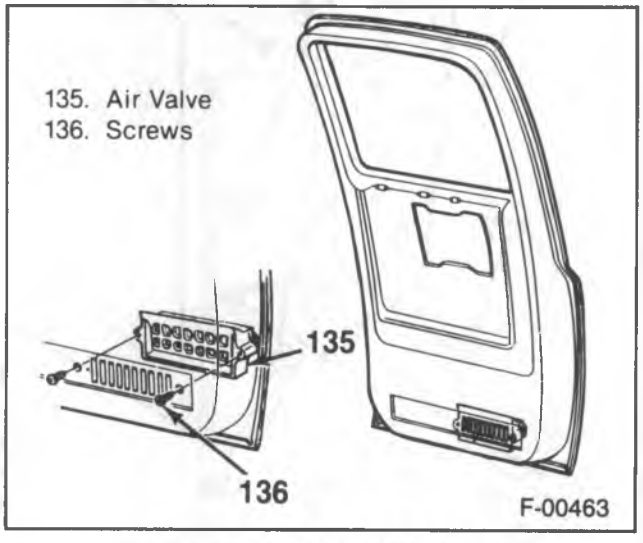

Figure 38—Door Air Valve

R/V MODEL REAR DOORS ON-VEHICLE SERVICE

DOOR AND HINGE REPLACEMENT

Remove or Disconnect (Figure 39)

- Mark the position of the door and the door opening on the hinges.

1. Strap pin.
2. Electrical wiring harness (if equipped).
   - Refer to "Door Trim Panel Replacement" for access to the wiring harness.
3. Rear door hinge access plug screws, and the access plug (if equipped).
4. Door to hinge bolts (139).
5. Door from the vehicle.
6. Door opening to hinge bolts (137).
7. Hinges from the door opening.

Install or Connect (Figure 39)

1. Hinges to the door opening.
   - Align the hinge with the previously made mark.
2. Door opening to the hinge bolts (137).
3. Door to the vehicle.
   - Align the hinge with the previously made mark.
4. Door to hinge bolts (139).
5. Rear door hinge access plug and screw (if equipped).
6. Electrical wiring harness (if equipped).
   - Refer to "Door Trim Panel" for access to the wiring harness.
7. Strap pin.

DOOR ADJUSTMENT

Each of the two doors must first be adjusted in the door opening before adjusting the door to door clearance.

Adjust (Figure 40)

1. The door height so that there is a gap of 5 mm [±] 2.3 mm (0.19-inch [±] 0.09-inch) between the roof panel and the rear door panel.
2. The gap between the bottom of the door panel (not the bottom of the outer panel) and the platform panel should be 7 mm (0.28-inch). This measurement should be taken on each door individually from the side of the door. The door should be in its normal closed position. (The outer rear door panel is 14 mm [±] 1.5 mm (0.56-inch [±] 0.06-inch) away from the rear platform panel when normally closed.)

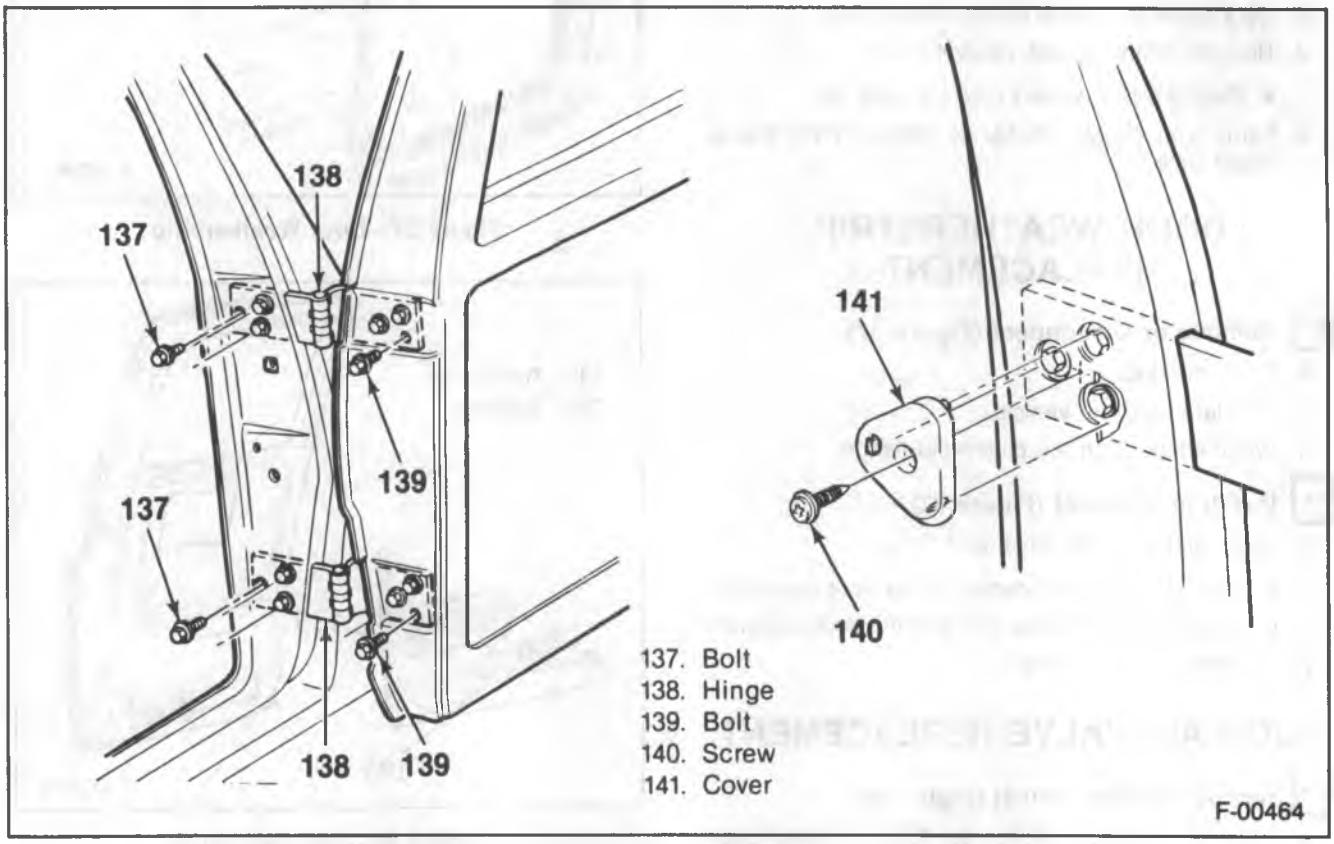

Figure 39—Hinge Components

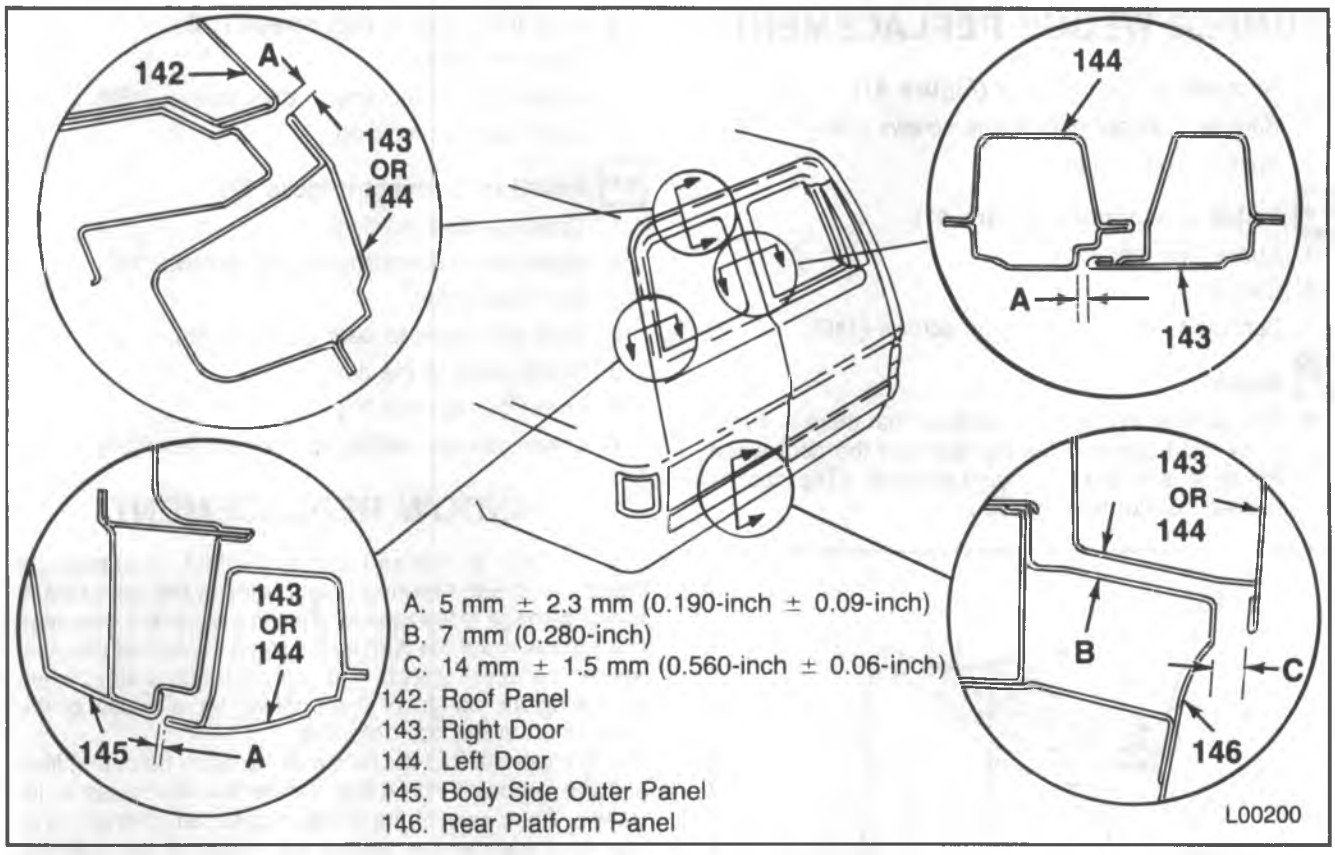

Figure 40—Striker Components

3. The rear door outer panel to the body side outer panel gap to 5 mm [±] 2.3 mm (0.19-inch [±] 0.09-inch).
4. The door to door clearance between the left and right outer door panels should be 5 mm [±] 2.3 mm (0.19-inch [±] 0.09-inch).

STRIKER REPLACEMENT

Remove or Disconnect (Figure 41)

1. Striker to door frame bolts (150).
2. Striker from the door frame.
3. Spacer (if equipped).

Install or Connect (Figure 41)

1. Spacer (as required).
2. Striker to the door frame.
3. Striker to door frame bolts (150).

Adjust (Figure 42)

- The striker to door latch clearance so that there are 4.4 mm (0.172-inch) between the striker and the door latch when the door is in the secondary latched position. (The door is latched but not fully closed.) An 11/64-inch diameter drill bit may be used to gage this clearance.

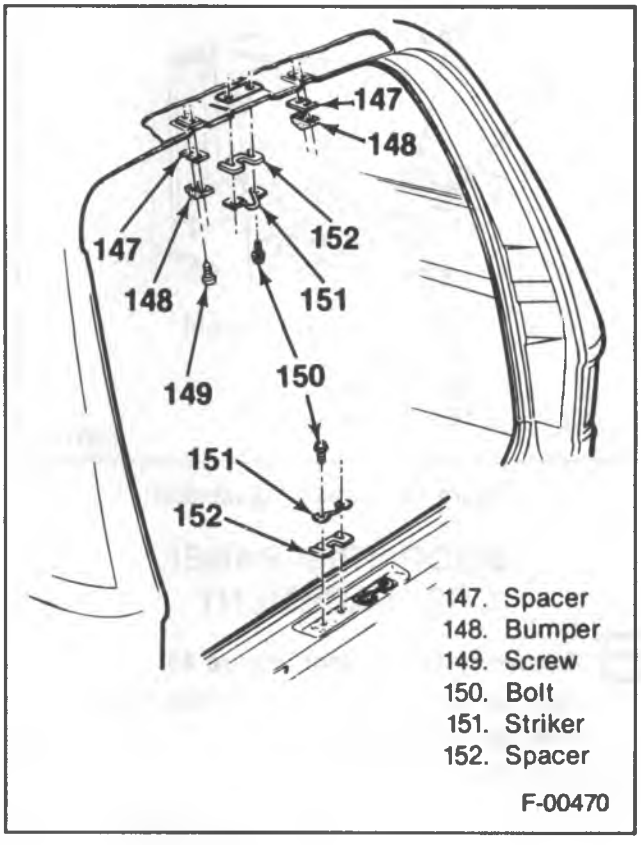

Figure 41—Striker Components

BUMPER WEDGE REPLACEMENT

Remove or Disconnect (Figure 41)

1. Bumper to upper door frame screws (149).
2. Bumper and spacer.

Install or Connect (Figure 41)

1. Spacer (as required).
2. Bumper.
3. Bumper to upper door frame screws (149).

Adjust

- The bumper to door clearance so that there is 1 mm (0.04-inch) between the bumper and the door when the door is in the secondary position. (The door is latched but not fully closed.)

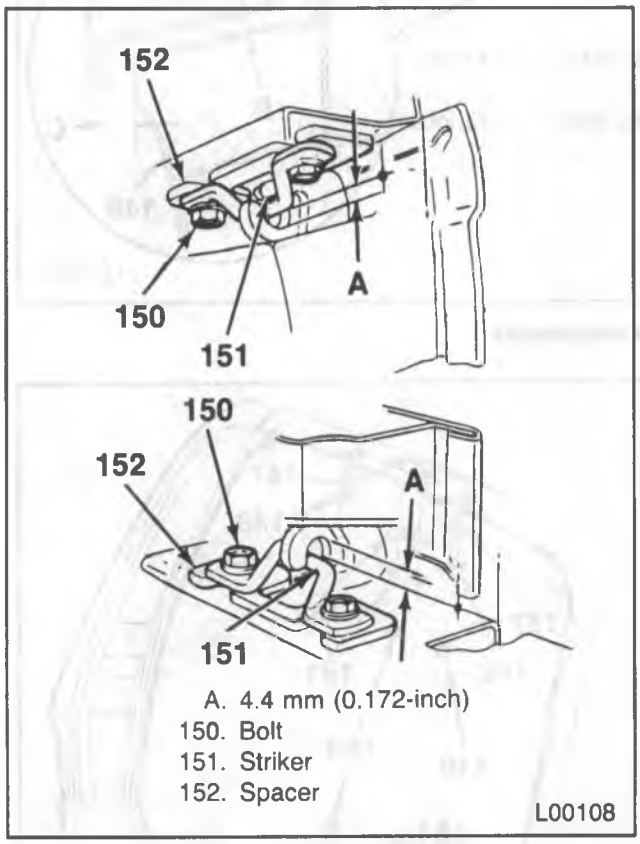

Figure 42—Striker Adjustment

DOOR TRIM PANEL REPLACEMENT

Remove or Disconnect (Figure 43)

1. Lower garnish molding to door screws (158).
2. Lower garnish molding.
3. Check strap from the door.
4. Door trim panel to door screws (156).
5. Door trim panel.
6. Upper garnish molding to door screws (153).
7. Upper garnish molding.

Install or Connect (Figure 43)

1. Upper garnish molding.
2. Upper garnish molding to door screws (153).
3. Door trim panel.
4. Door trim panel to door screws (156).
5. Check strap to the door.
6. Lower garnish molding.
7. Lower garnish molding to door screws (158).

WINDOW REPLACEMENT

If a glass is cracked but still intact, it should be crisscrossed with masking tape to reduce the risk of injury and/or damage to the vehicle. If a crack extends to the edge of the glass, mark the door with a piece of chalk at the point where the crack meets the weatherstrip. Later, when examining the flange of the opening for a cause of the crack, start at the point marked.

It is important that the cause of the crack be determined and the condition corrected, before the new glass is installed. The cause of the crack may be an obstruction or high spot somewhere around the flange of the opening; cracking may not occur until pressure from the high spot or obstruction becomes particularly high due to winds, extremes of temperatures, or rough terrain.

Remove or Disconnect (Figure 44)

CAUTION: Always wear heavy gloves when handling glass to minimize the risk of injury.

1. Weatherstrip seal by running a putty knife between the flange and the weatherstrip (inside and outside the door).
   - Have an assistant outside the cab by the window.
2. Weatherstrip and glass from the flange.
   - Force the weatherstrip from the flange from the inside with a putty knife.
3. Window from the weatherstrip.

Install or Connect (Figure 44)

1. Weatherstrip to the glass.
2. A six mm (1/4-inch) cord in the weatherstrip groove. The ends should overlap about 5 cm (2-inches) at the window bottom.
3. Window and weatherstrip on the flange from outside the cab.
   - Brush soapy water on the flange.
   - Have an assistant pull the cord from inside the cab to seat the lip of the weatherstrip on the flange.

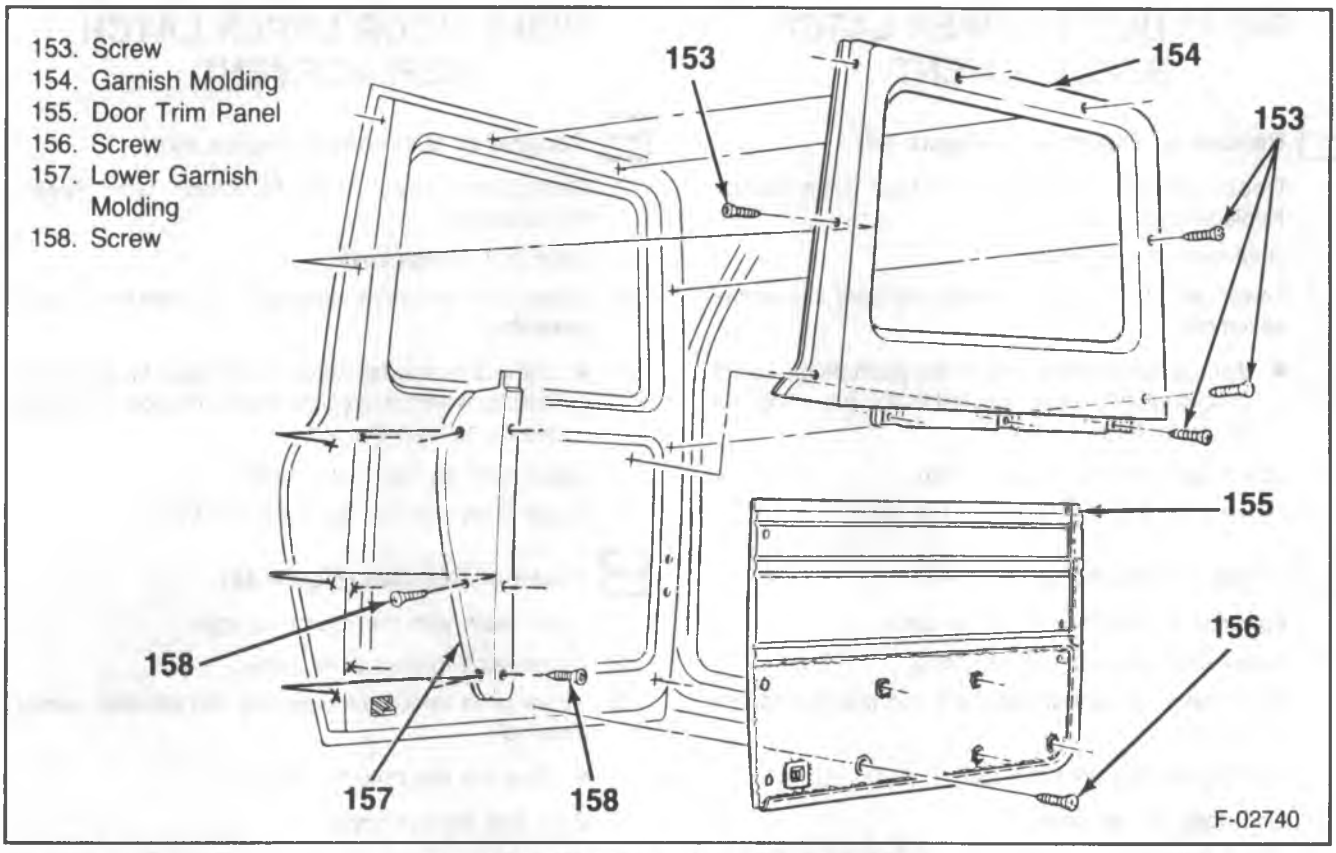

Figure 43—Door Trim Panel Components

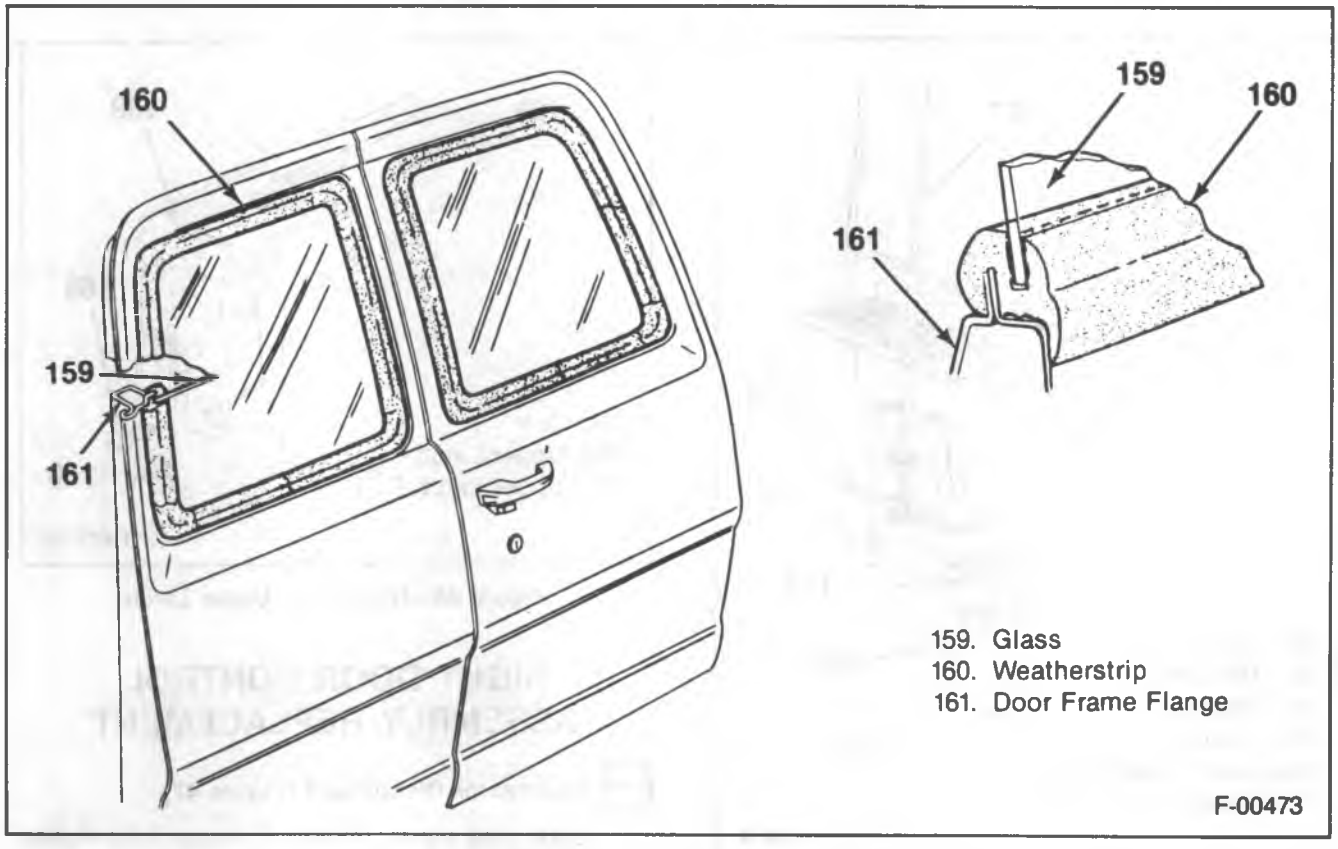

Figure 44—Window Components

RIGHT DOOR LOWER LATCH REPLACEMENT

Remove or Disconnect (Figure 45)

Door trim panel. Refer to "Door Trim Panel Replacement."

2. Door lock access cover.
3. Lower latch to control assembly rod from the control assembly.
   - Using a flat bladed screwdriver, push on the top of the clip where it is connected to the rod. Pivot the clip away from the rod.
4. Lower latch to door screws (165).
5. Lower latch with the rod from the door.

Install or Connect (Figure 45)

1. Lower latch with the rod to the door.
2. Lower latch to door screws (165).
3. Lower latch to control assembly rod into the control assembly.
   - Pivot the clip onto the rod.
4. Door lock access cover.
5. Door trim panel. Refer to "Door Trim Panel Replacement."

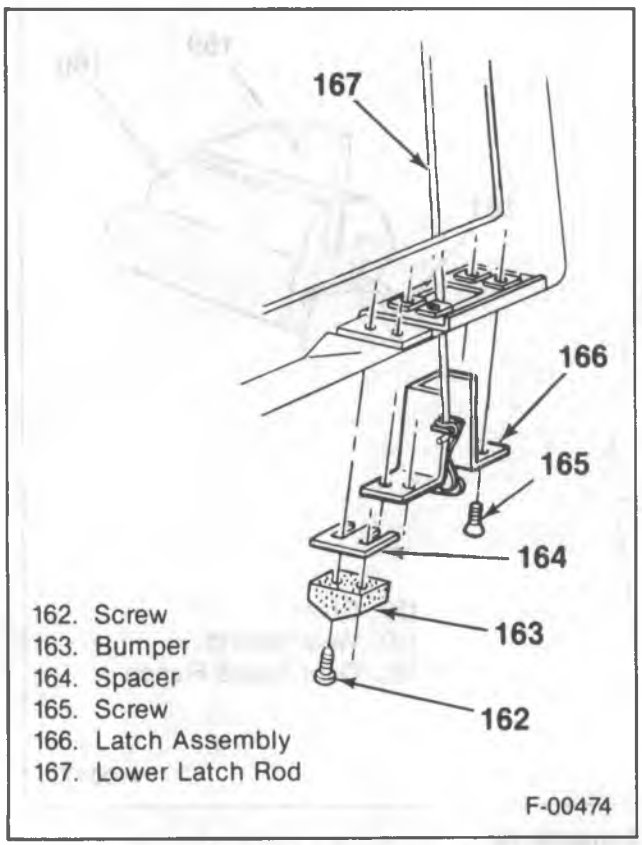

Figure 45—Right Door Lower Latch

RIGHT DOOR UPPER LATCH REPLACEMENT

Remove or Disconnect (Figure 46)

1. Door trim panel. Refer to "Door Trim Panel Replacement."
2. Door lock access cover.
3. Upper latch to control assembly rod from the control assembly.
   - Using a flat-bladed screwdriver, push on the top of the clip where it is connected to the rod. Pivot the clip away from the rod.
4. Upper latch to door bolts (168).
5. Upper latch with the rod from the door.

Install or Connect (Figure 46)

1. Upper latch with the rod to the door.
2. Upper latch to door bolts (168).
3. Upper latch to control assembly rod into the control assembly.
   - Pivot the clip onto the rod.
4. Door lock access cover.
5. Door trim panel. Refer to "Door Trim Panel Replacement."

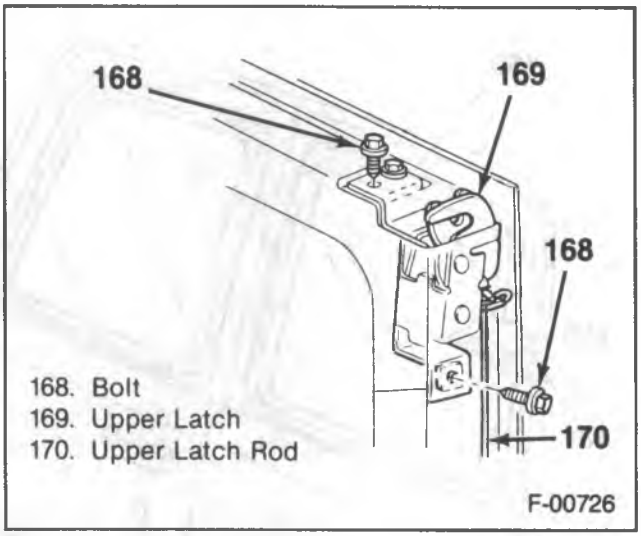

Figure 46—Right Door Upper Latch

RIGHT DOOR CONTROL ASSEMBLY REPLACEMENT

Remove or Disconnect (Figure 47)

1. Door trim panel. Refer to "Door Trim Panel Replacement."
2. Door lock access cover.

3. Upper and lower door latch rods from the control assembly.
   - Using a flat-bladed screwdriver, push on the top of the clip where it is connected to the rod. Pivot the clip away from the rod.
4. Electric door actuator (if equipped).
5. Door to control assembly bolts (173).
6. Control assembly through the access hole.

Install or Connect (Figure 47)

1. Control assembly through the access hole.
2. Door to control assembly bolts (173).
3. Electrical door actuator (if equipped).
4. Upper and lower door latch rods to the control assembly.
   - Pivot the clips onto the rods.
5. Door lock access cover.
6. Door trim panel. Refer to "Door Trim Panel Replacement."

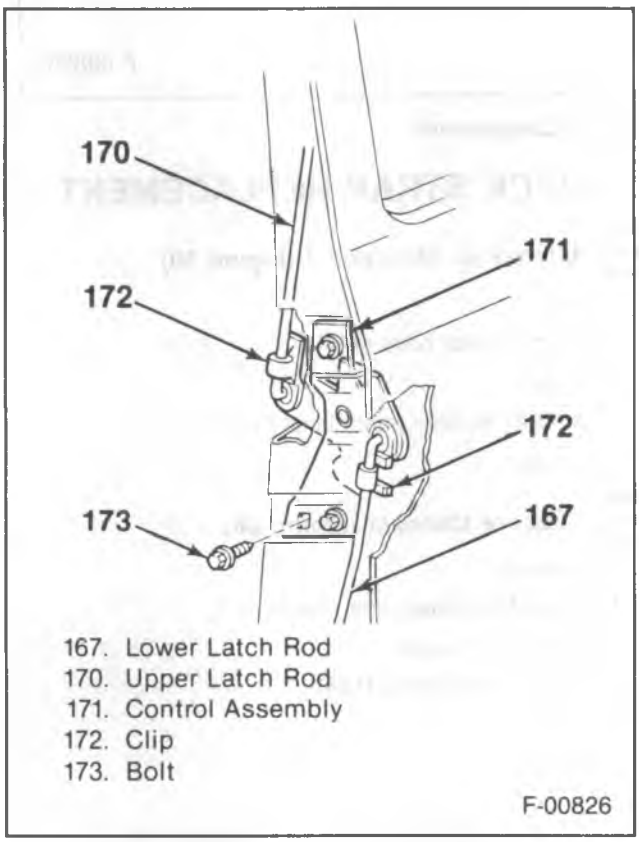

Figure 47—Right Door Control Assembly

DOOR OUTSIDE HANDLE REPLACEMENT

Remove or Disconnect (Figure 48)

1. Door trim panel. Refer to "Door Trim Panel Replacement."
2. Door lock access cover.
3. Outside door handle to lock rod clip.
   - Using a flat bladed screwdriver, push on the top of the clip where it is connected to the rod. Pivot the clip away from the rod.
4. Outside door handle to lock rod from the lock.
5. Door to outside handle screws (174).
6. Handle with the control rod from the door.
7. Gaskets from the door.

Install or Connect (Figure 48)

1. Large gasket over the lock rod and onto the handle.
2. Handle with the lock rod onto the door.
3. Door to outside handle screw (174) to the push button side of the handle.
   - Do not tighten.
4. Small gasket between the door and the handle.
5. Door to outside handle screw (174) to the other side of the handle.
   - Tighten both screws.
6. Outside door handle to lock rod to the lock assembly.
7. Clip onto the lock rod.
   - Pivot the clip up and onto the lock rod.
8. Door lock access cover.
9. Door trim panel. Refer to "Door Trim Panel Replacement."

LEFT DOOR LOWER LATCH REPLACEMENT

Remove or Disconnect (Figure 49)

- Open the door.

1. Latch to door screws (182).
2. Latch from the door.

Install or Connect (Figure 49)

1. Latch to the door.
2. Latch to door screws (182).

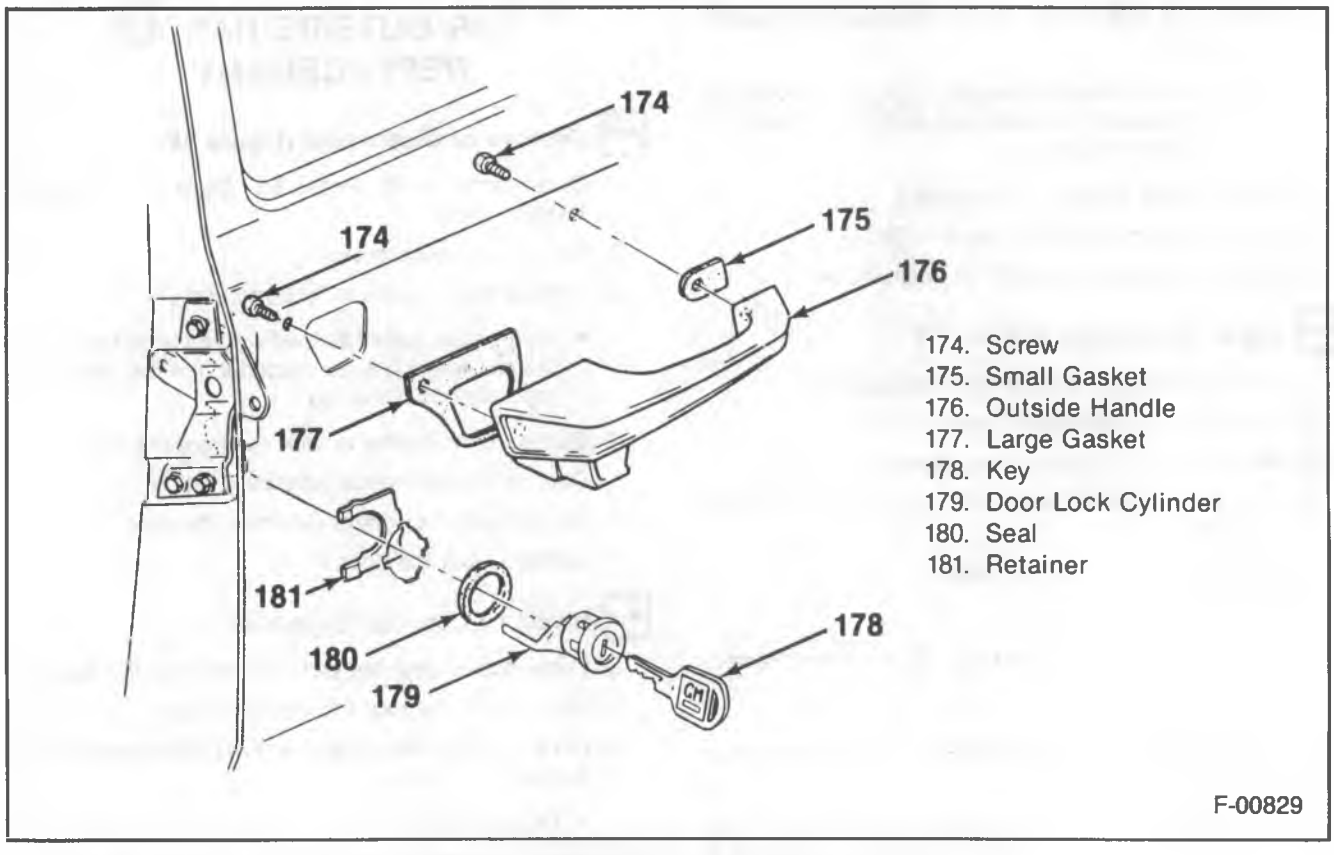

Figure 48—Door Outside Handle Components

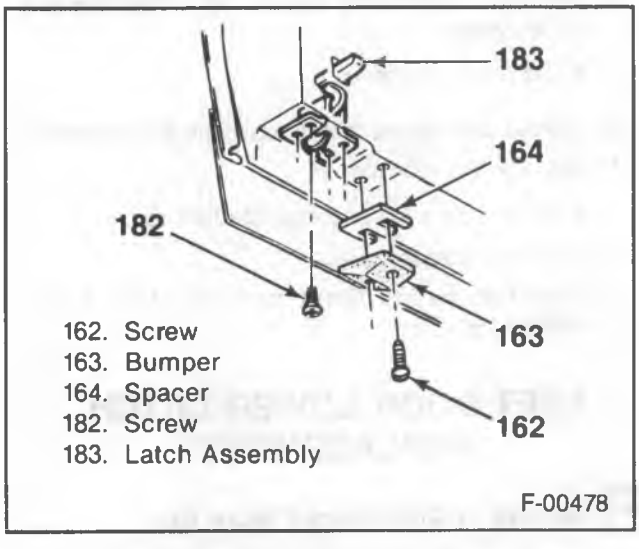

Figure 49—Left Door Lower Latch

CHECK STRAP REPLACEMENT

Remove or Disconnect (Figure 50)

1. Pin.
2. Strap to door bolts (184).
3. Strap.
4. Bracket to inner panel bolts (187)
5. Bracket.

Install or Connect (Figure 50)

1. Bracket.
2. Bracket to inner panel bolts (187).
3. Strap to the door.
4. Strap to door bolts (184).
5. Pin.

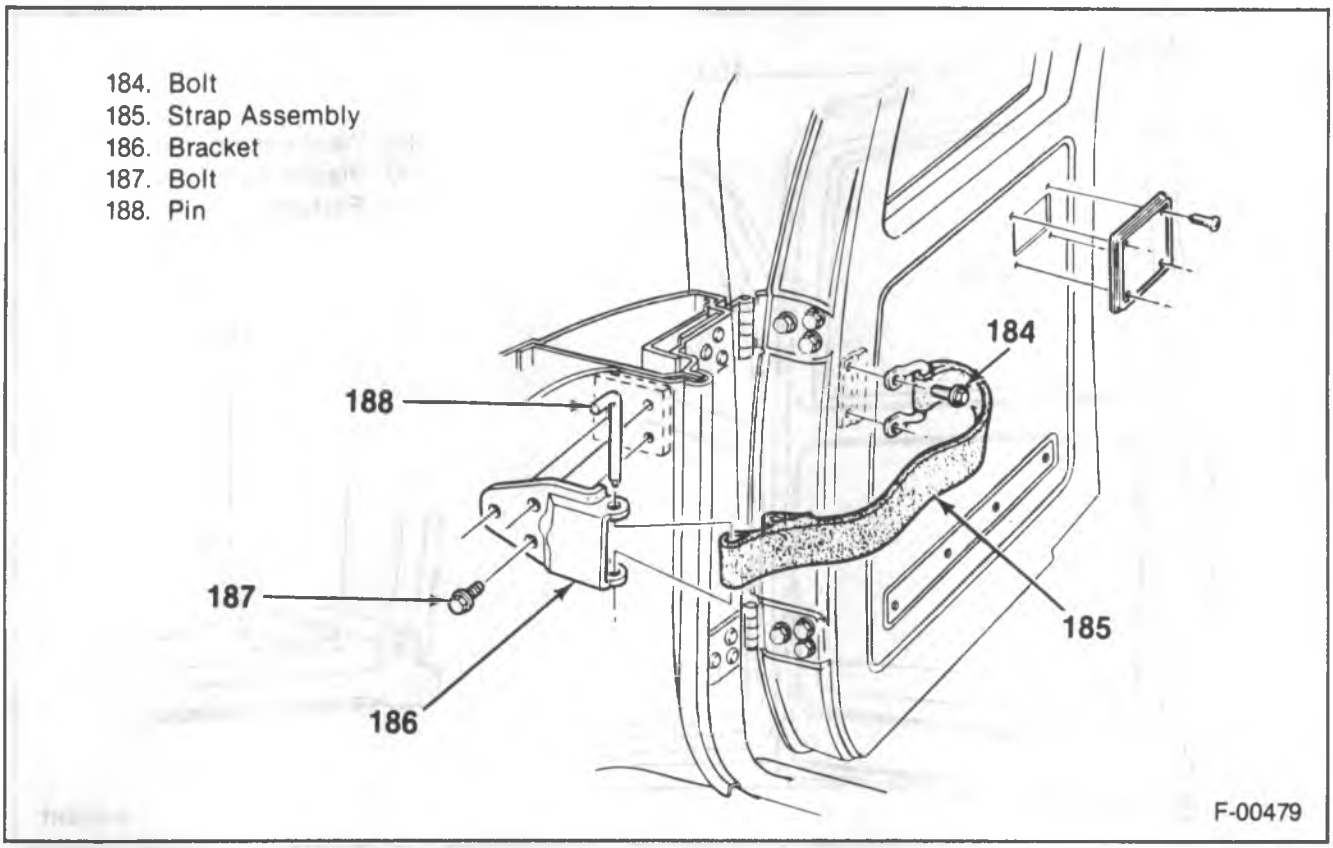

Figure 50—Check Strap Components

RIGHT DOOR WEATHERSTRIP REPLACEMENT

Remove or Disconnect (Figure 51)

1. Weatherstrip from the door using 3M Release Agent (or equivalent).

Clean

- The door and weatherstrip of all the old cement.

Install or Connect (Figure 51)

1. Weatherstrip to the door using 3M Weatherstrip Adhesive (or equivalent).

LEFT DOOR WEATHERSTRIP REPLACEMENT

Remove or Disconnect (Figures 52 and 53)

Tool Required:

J 24595-B Door Trim Pad Clip Remover.

1. Weatherstrip to door fasteners using J 24595-B (figure 53).
2. Weatherstrip from the door using 3M Release Agent (or equivalent).

Clean

- The door and weatherstrip of all the old cement.

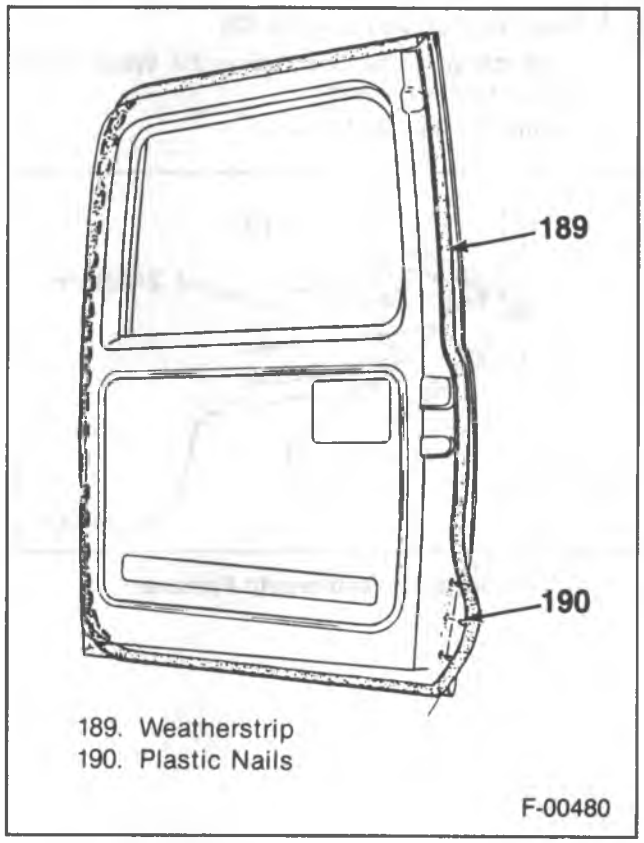

Figure 51—Right Door Weatherstrip

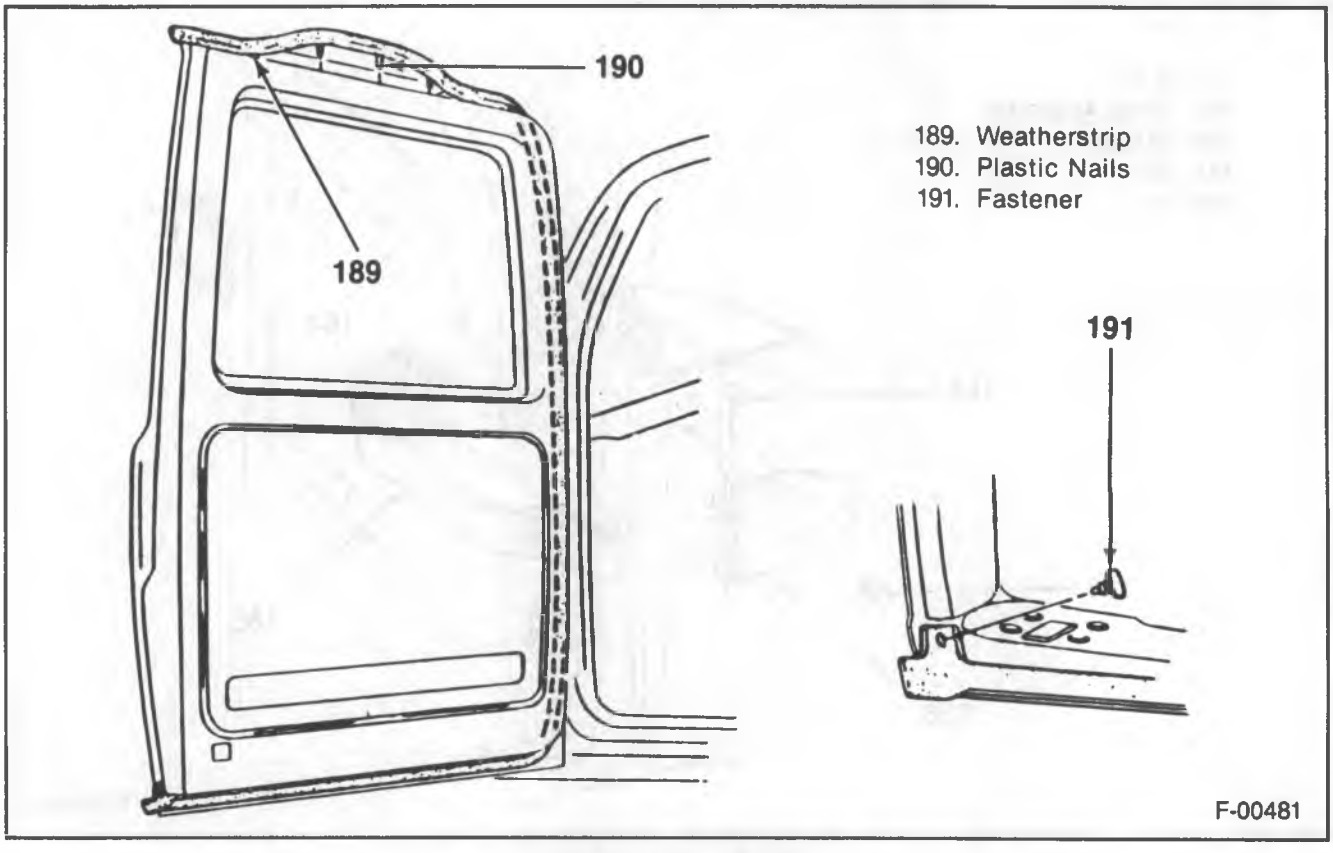

Figure 52—Left Door Weatherstrip

Install or Connect (Figure 52)

1. Weatherstrip to the door using 3M Weatherstrip Adhesive (or equivalent).
2. Weatherstrip to door fasteners.

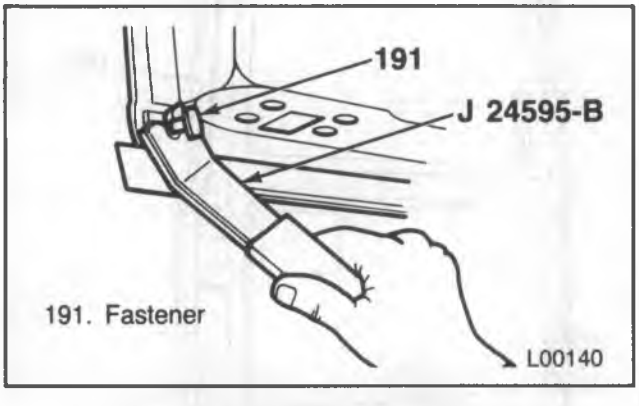

Figure 53—Weatherstrip Fastener

SECONDARY WEATHERSTRIP REPLACEMENT

Remove or Disconnect (Figure 54)

- Weatherstrip from the door using 3M Release Agent (or equivalent).

Clean

- The door and weatherstrip of all the old cement.

Install or Connect (Figure 54)

- Weatherstrip to the door using 3M Weatherstrip Adhesive (or equivalent).

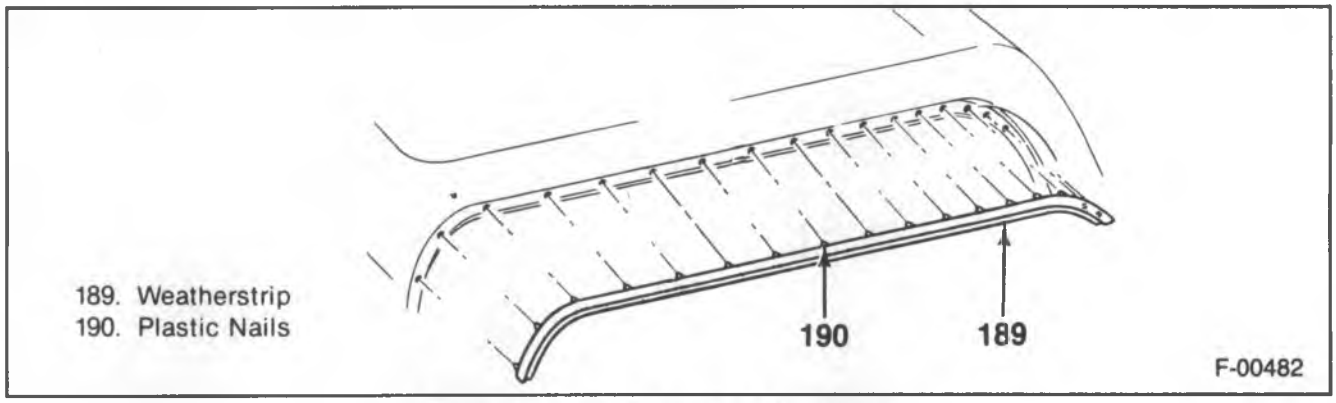

Figure 54—Door Secondary Weatherstrip

SPECIAL TOOLS

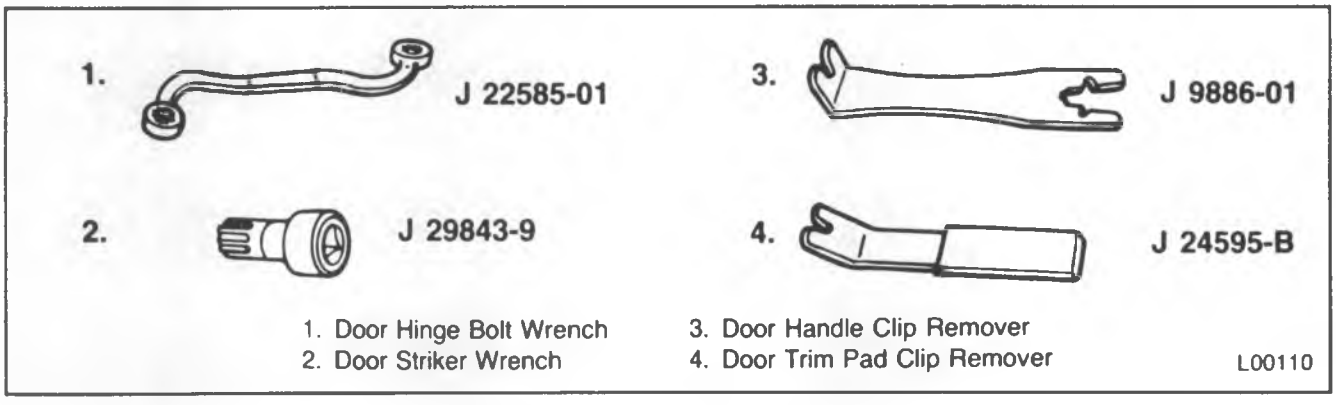

Figure 55—Special Tools

SECTION 10A2

SEATS

***NOTICE:** When fasteners are removed, always reinstall them at the same location from which they were removed. If a fastener needs to be replaced, use the correct part number fastener for that application. If the correct part number fastener is not available, a fastener of equal size and strength (or stronger) may be used. Fasteners that are not reused, and those requiring thread locking compound will be called out. The correct torque value must be used when installing fasteners that require it. If the above conditions are not followed, parts or systems damage could result.*

CONTENTS

SUBJECT

Diagnosis of Manual Seat Adjuster 10A2- 2
On-Vehicle Service 10A2- 2
Seat Adjuster Adjustment 10A2- 2
Front Seat And Seat Adjuster Replacement 10A2- 3
Utility Vehicle Passenger Front Bucket Seat Replacement 10A2- 3
Bench Seatback And Catch Replacement 10A2- 5
Seat Belt Replacement 10A2- 5
High Back Bucket Seat Belt Replacement 10A2- 7
Center Seatback Replacement 10A2- 8
Center Seat Bottom Replacement 10A2- 8
Center Seat Bottom Support Bracket Replacement 10A2- 8
Center Seatback Bumper And Striker Replacement 10A2-11
Center Seat Bottom Striker Replacement 10A2-11
Center Seatback Latch Replacement 10A2-12
Center Seat Bottom Latch Replacement 10A2-12
Center Seat Belt Replacement 10A2-13
Crew Cab Rear Seat Replacement 10A2-14
Crew Cab Rear Seatback And Catch Replacement 10A2-14
Crew Cab Rear Seat Belt Replacement 10A2-15
Utility Vehicle Rear Seat Replacement 10A2-16
Utility Vehicle Rear Seat Cover Rod Replacement 10A2-16
Utility Vehicle Rear Seat Storage Strut Replacement 10A2-17
Utility Vehicle Rear Seat Belt Replacement 10A2-18
Utility Vehicle And Suburban Seatback And Hinge Replacement 10A2-19
Utility Vehicle And Suburban Latch And Support Assembly Replacement 10A2-20
Suburban Rear Seat Replacement 10A2-20
Suburban Rear Seat Belt Replacement 10A2-20
Top Strap Belt Anchor Installation 10A2-22
Crew Cab Models 10A2-22
Utility Vehicle Rear Seat 10A2-23
Suburban Front Seat 10A2-23
Suburban Second Seat 10A2-24
Suburban Third Seat 10A2-24
Specifications 10A2-26

DIAGNOSIS OF MANUAL SEAT ADJUSTER

PROBLEM	POSSIBLE CAUSE	CORRECTION
Adjuster Will Not Lock	1. Locking wire too tight.	1. Loosen the locking wire tension enough to provide full engagement of the lock bar in the locking slots of the adjuster lower channel. Refer to "Seat Adjuster Adjustment."
	2. Adjuster lock bar spring disconnected or broken.	2. Connect the spring or install a new spring.
	3. Adjuster lock bar sticking or binding.	3. Lubricate the lock bar pivot. If the bar is binding, eliminate the cause of binding or replace the adjuster.
Adjuster Will Not Unlock	1. Locking wire too loose or disconnected.	1. Tighten the locking wire enough to allow the lock bar to disengage from the locking slots in the adjuster lower channel when the lock control lever is activated. Refer to "Seat Adjuster Adjustment."
	2. Adjuster lock bar sticking or binding.	2. Lubricate the lock bar pivot. If the bar is binding, eliminate the cause of binding or replace the adjuster.
When The Left Adjuster Locks, The Right Adjuster Is Between Lock Positions	1. Right adjuster either rearward or forward of the left adjuster.	1. Loosen the adjuster to floor pan bolts or nuts — move one adjuster forward or rearward as far as possible and the other adjuster in the opposite direction. Refer to "Seat Adjuster Adjustments."
Seat Hard To Move Forward Or Rearward	1. Adjusters new, not broken in.	1. Operate the seat to the full forward and full rearward positions several times to work the new tightness out of the channels.
	2. Adjuster(s) improperly lubricated.	2. Lubricate the adjuster channels with Lubriplate or equivalent.
	3. Adjuster(s) binding due to bent or damaged channels.	3. Replace the adjuster.
	4. Adjusters not in parallel alignment with each other.	4. Loosen the floor pan attaching bolts or nuts, align the adjusters parallel on the floor pan and tighten nuts. Refer to "Seat Adjuster Adjustments."

GMTB-0872-2L

ON-VEHICLE SERVICE

SEAT ADJUSTER ADJUSTMENT

Adjust

- Remove the seat. Refer to "Front Seat and Seat Adjuster Replacement."
  - Leave the adjuster on the seat.
- Loosen the adjuster to seat bolts.

1. The adjuster rails forward or rearward so that both rails are the same distance from the front of the seat.
2. The adjuster rails so they are parallel to each other.
   - Tighten the adjuster to seat bolts.
3. Wire assembly tension. Three holes on the secondary adjuster rail allow for tension adjustment of the wire assembly (figure 1).
   - Slide the spring off the hook.
   - Open the hook, and remove it from the hole.
   - Move the hook to a forward hole to loosen the wire, move the hook to a rearward hole to tighten it.
   - Close the hook, and slide the spring over the hook.

- Install the seat. Refer to "Front Seat and Seat Adjuster Replacement."

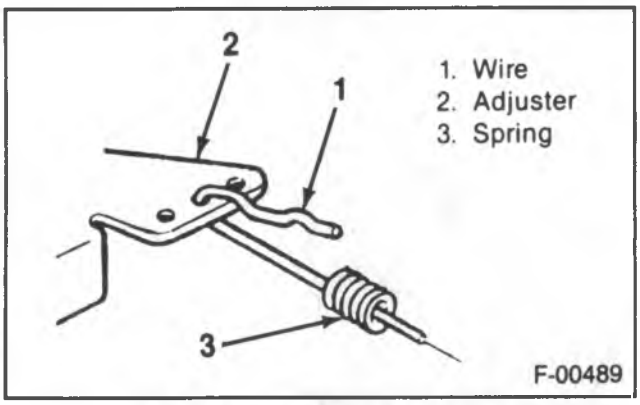

Figure 1—Adjustment Points

FRONT SEAT AND SEAT ADJUSTER REPLACEMENT

This procedure applies to all R/V Model front seats, whether bench or bucket type with the exception of the utility vehicle passenger front bucket seat. Refer to "Utility Vehicle Passenger Front Bucket Seat Replacement" for information on this type of seat.

Remove or Disconnect (Figures 2 and 3)

1. Bolt cover (5) (if equipped).
2. Seat adjuster to floor panel bolts (7).
3. Seat (10) with adjuster (2) from the vehicle.
4. Adjuster to seat bolts (8).
5. Adjuster (2) from the seat (10).

Install or Connect (Figures 2 and 3)

1. Adjuster (2) to the seat (10).
2. Adjuster to seat bolts (8).
3. Seat (10) with adjuster (2) to the vehicle.
4. Seat adjuster to floor panel bolts (7).
5. Bolt cover (5) (if equipped).

UTILITY VEHICLE PASSENGER FRONT BUCKET SEAT REPLACEMENT

Remove or Disconnect (Figure 4)

- Place the seat in its forward position.

1. Seat cable assembly (19) from the adjuster assembly (10).
2. Adjuster spring (21) from seat (11) and adjuster assembly (10).
3. Seat attaching bolts (12).
4. Seat (11) from adjuster assembly (10).
5. Adjuster assembly to riser assembly bolts (12).
6. Riser assembly (13) to the floor panel bolts (20).

Install or Connect (Figure 4)

1. Riser assembly (13) to floor panel bolts (20).
2. Adjuster assembly (10) to riser assembly bolts (12).

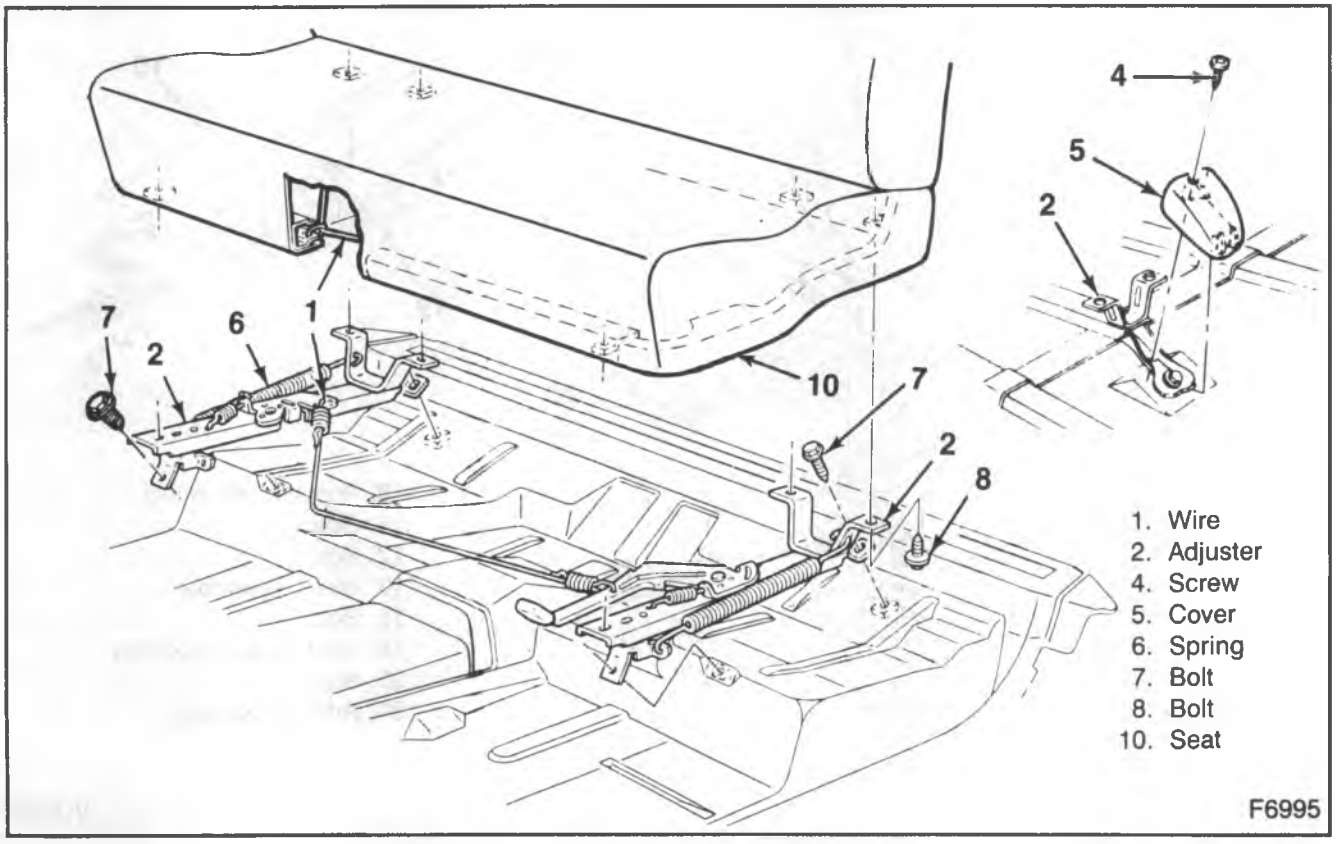

Figure 2—Bench Seat Components

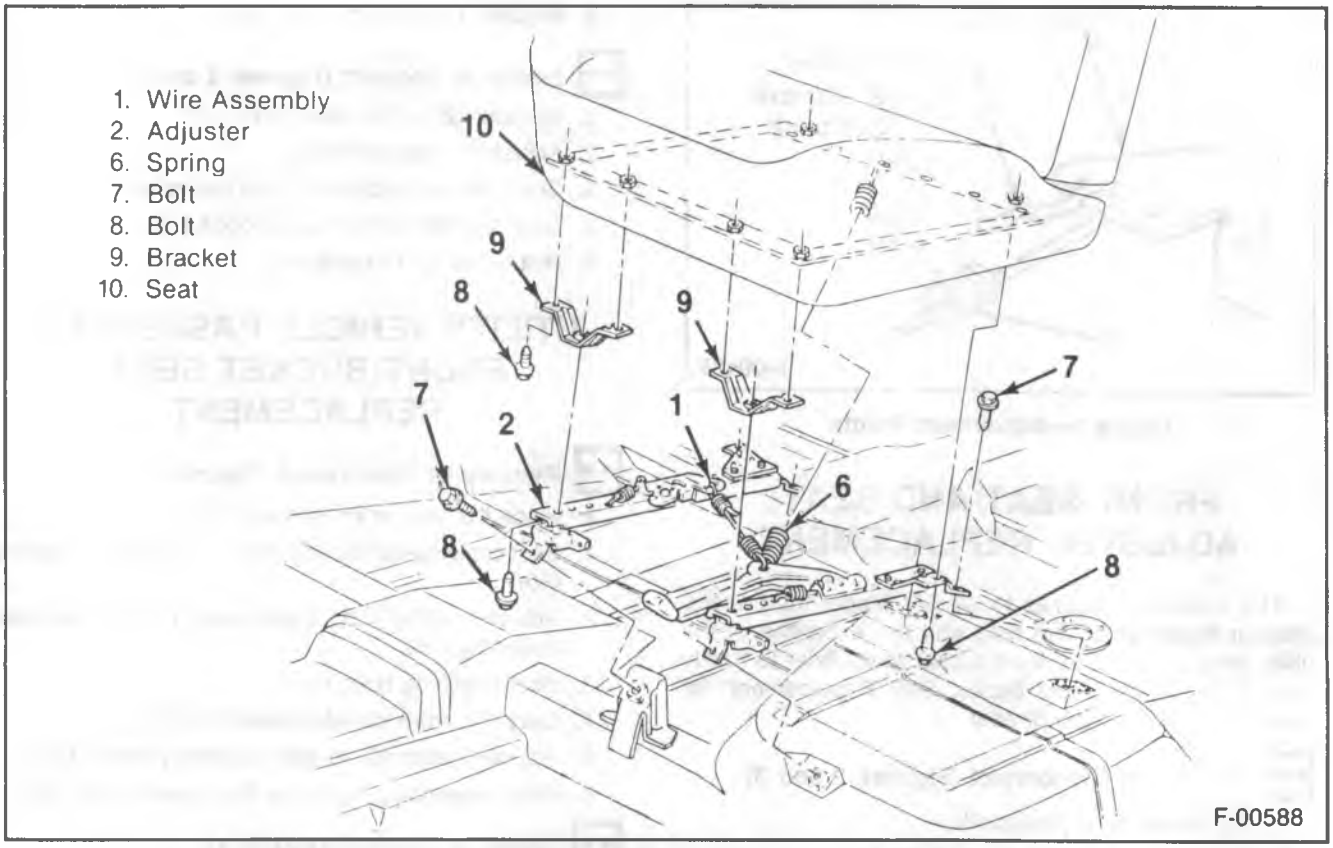

Figure 3—Bucket Seat Components

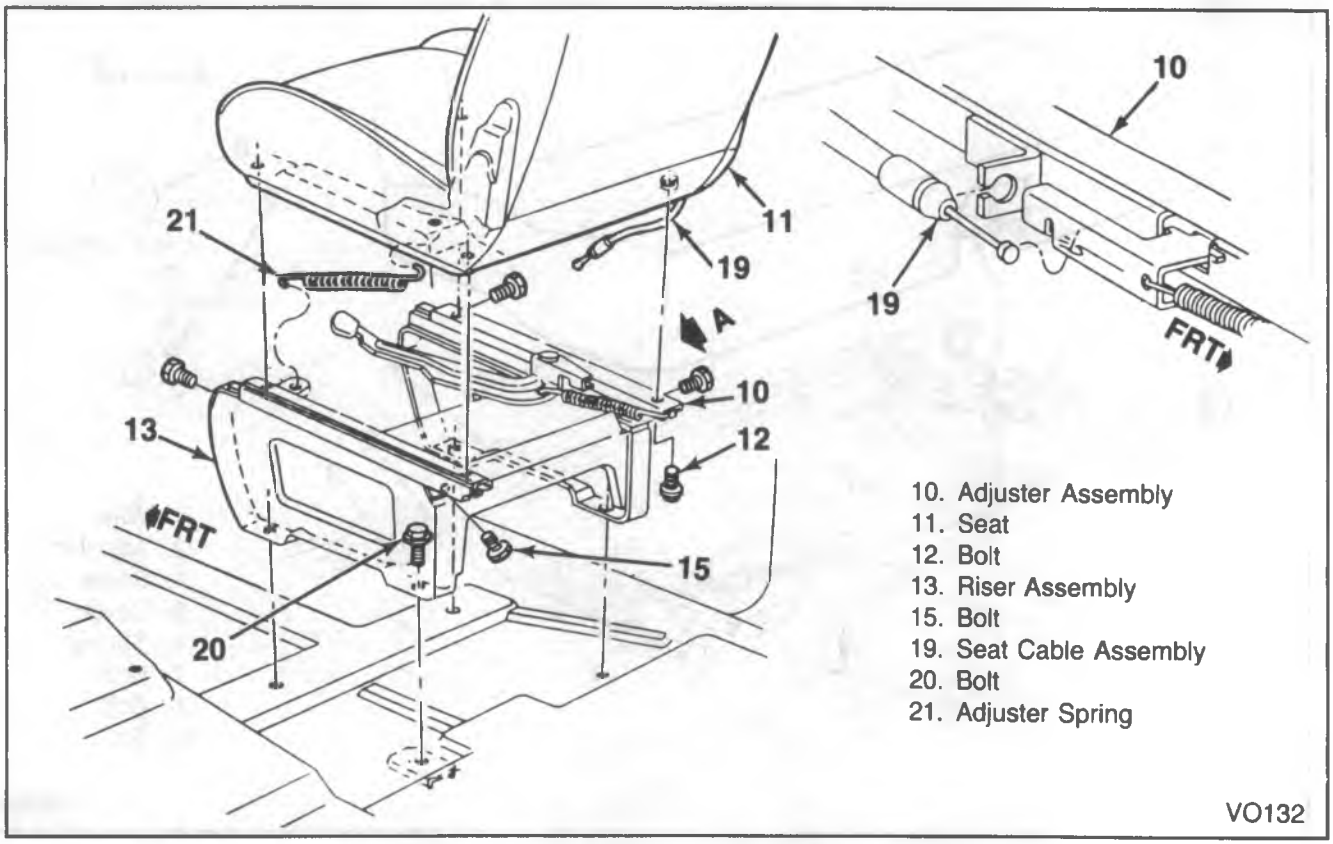

Figure 4—Utility Vehicle Passenger Seat Components

3. Seat (11) to adjuster assembly (10).
4. Seat attaching bolts (12).
5. Adjuster spring (21) to seat (11) and adjuster assembly (10).
6. Seat cable assembly (19) to adjuster assembly (10).

BENCH SEATBACK AND CATCH REPLACEMENT

Remove or Disconnect (Figure 5)

1. Seat back trim cover (32).
2. Striker (27).
3. Catch (28) with bushing (29).
4. Washer (30).
5. Seatback to seat base bolt (26).
6. Washers (30) and (71).
7. Seatback from the vehicle.

Install or Connect (Figure 5)

1. Seatback to the vehicle.
2. Washer (30) between the seat base and the seatback frame.
3. Seatback to seat base washer (71) and bolt (26).
4. Washer (30).
5. Catch (28) with bushing (29).
6. Striker (27).
7. Seat back trim cover (32).

SEAT BELT REPLACEMENT

This procedure covers belts for all seats except high back bucket seats.

Remove or Disconnect (Figures 6 and 7)

1. Upper seat belt anchor plate cover (42).
   - Pry the top of the cover away from the anchor plate.
2. Anchor plate bolt (36).
3. Anchor plate (35).
4. Plug (39) (if equipped).
5. Retractor (33) to floor bolt (40).
6. Seat belt wire (41) (left side only).
7. Retractor (33) from the vehicle.
8. Plug (37).
9. Buckle (34) to floor bolt (38).
10. Buckle from the floor.

Install or Connect

NOTICE: For steps 2, 6, and 9, see "Notice" on page 10A2-1 of this section.

1. Buckle (34) to the floor.
2. Buckle to floor bolt (38).

   Tighten
   - Bolt to 50 N•m (37 ft. lbs.).
3. Plug (37).
4. Retractor (33) to the vehicle.
5. Seat belt wire (41) (left side only).
6. Retractor to floor bolt (40).

   Tighten
   - Bolt to 50 N•m (37 ft. lbs.).
7. Plug (39) (if equipped).
8. Anchor plate (35) to the door pillar.
9. Anchor plate bolt (36).

   Tighten
   - Bolt to 50 N•m (37 ft. lbs.).
10. Upper seat belt anchor plate cover (42).
    - Pivot the cover upwards, and press it into place.

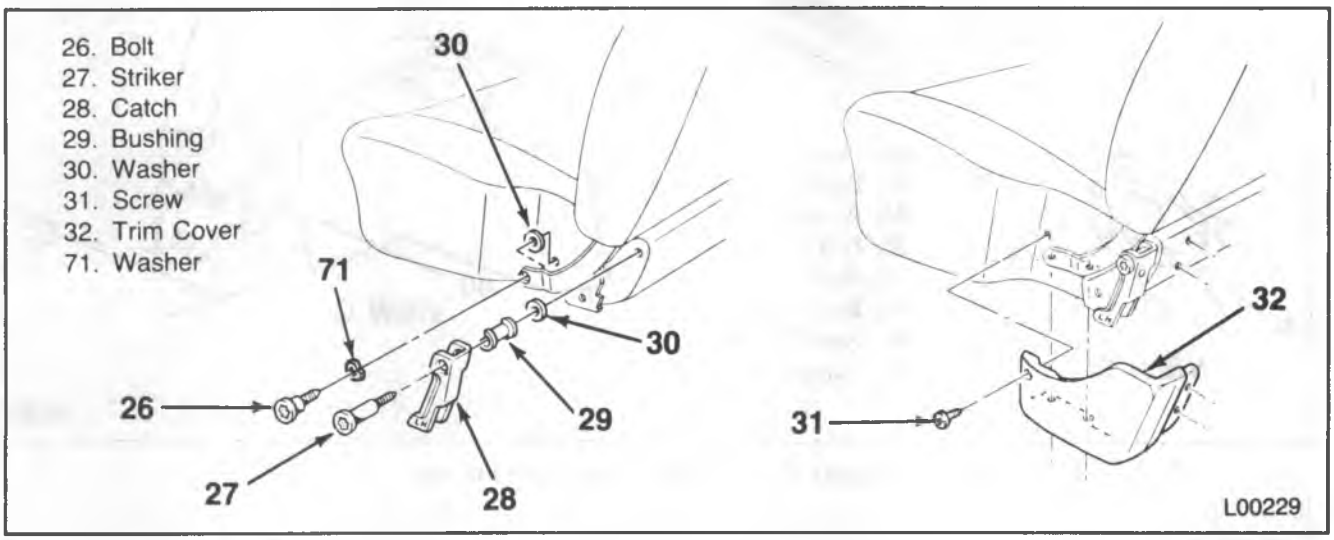

Figure 5—Seat Back Catch Components

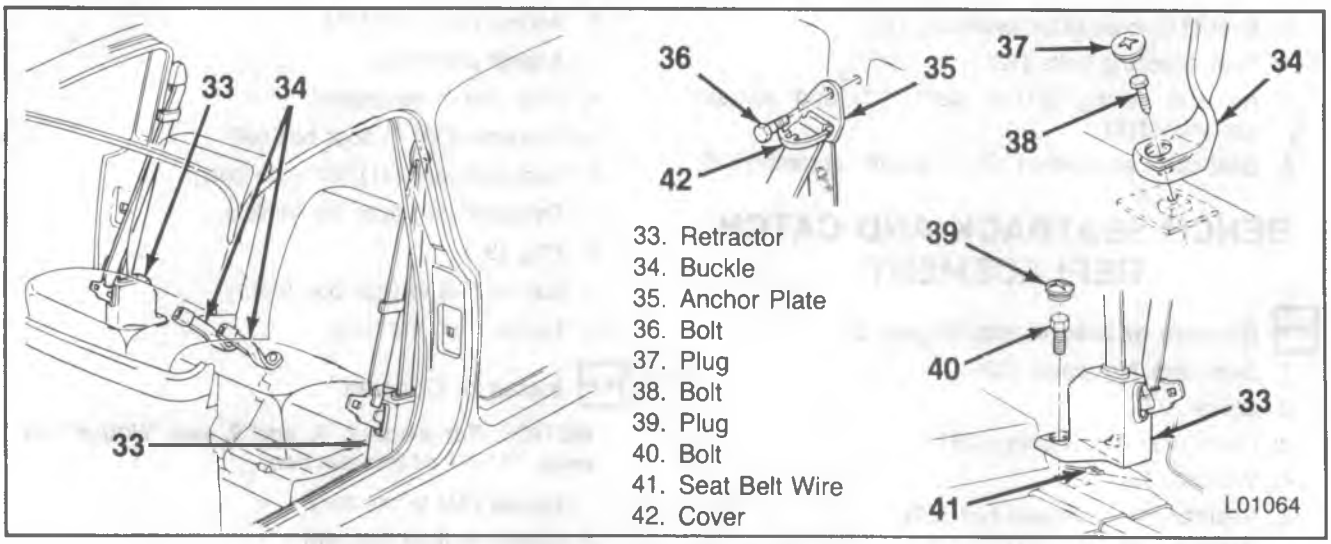

Figure 6—Bucket Seat Belt Components

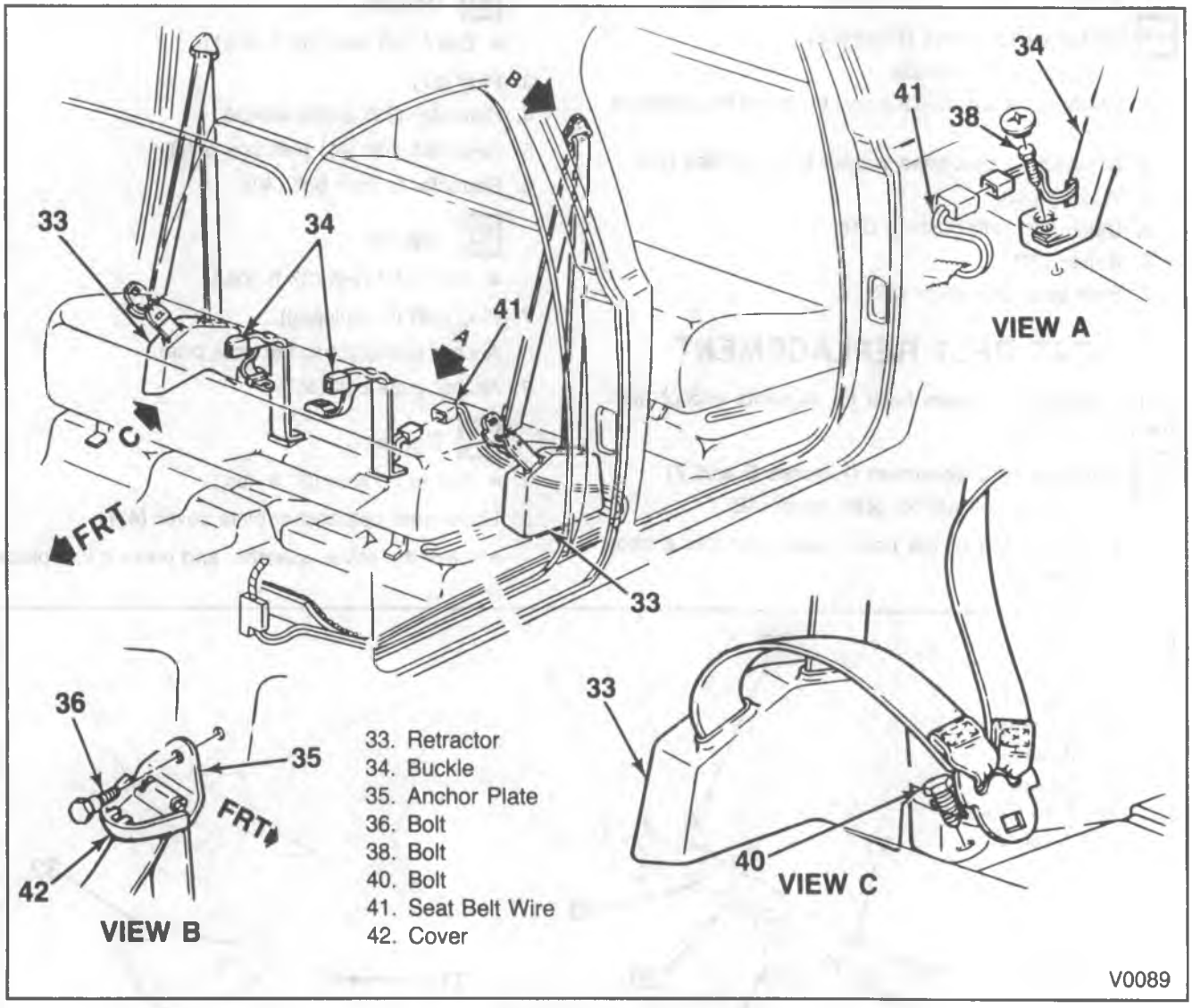

Figure 7—Bench Seat Belt Components

HIGH BACK BUCKET SEAT BELT REPLACEMENT

Remove or Disconnect (Figures 8 and 9)

1. Upper seat belt anchor plate cover (42).
   - Pry the top of the cover away from the anchor plate.
2. Anchor plate bolt (36).
3. Anchor plate (35).
4. Retractor lower flap (54).
5. Retractor (44) to pillar bolt (47).
6. Lower anchor bolt (53).
7. Lower anchor (46).
8. Retractor (44) from the vehicle.
9. Plug (51).
10. Buckle (43) to floor bolt (50).
11. Seat belt wire (41) (left side only).
12. Buckle from the floor.

Install or Connect (Figures 8 and 9)

NOTICE: For steps 3, 7, 8, and 11 refer to "Notice" on page 10A2-1 of this section.

1. Buckle (43) to the floor.
2. Seat belt wire (41) (left side only).
3. Buckle (43) to floor bolt (50).

   Tighten
   - Bolt to 50 N•m (37 ft. lbs.).
4. Plug (51).
5. Retractor (44) to the vehicle.
6. Lower anchor (46) to the pillar.
7. Lower anchor bolt (53).

   Tighten
   - Bolt to 50 N•m (37 ft. lbs.).
8. Retractor (44) to pillar bolt (47).

   Tighten
   - Bolt to 50 N•m (37 ft. lbs.).
9. Retractor lower flap (54).
10. Anchor plate (35).
11. Anchor plate bolt (36).

    Tighten
    - Bolt to 50 N•m (37 ft. lbs.).
12. Upper seat belt anchor plate cover (42).

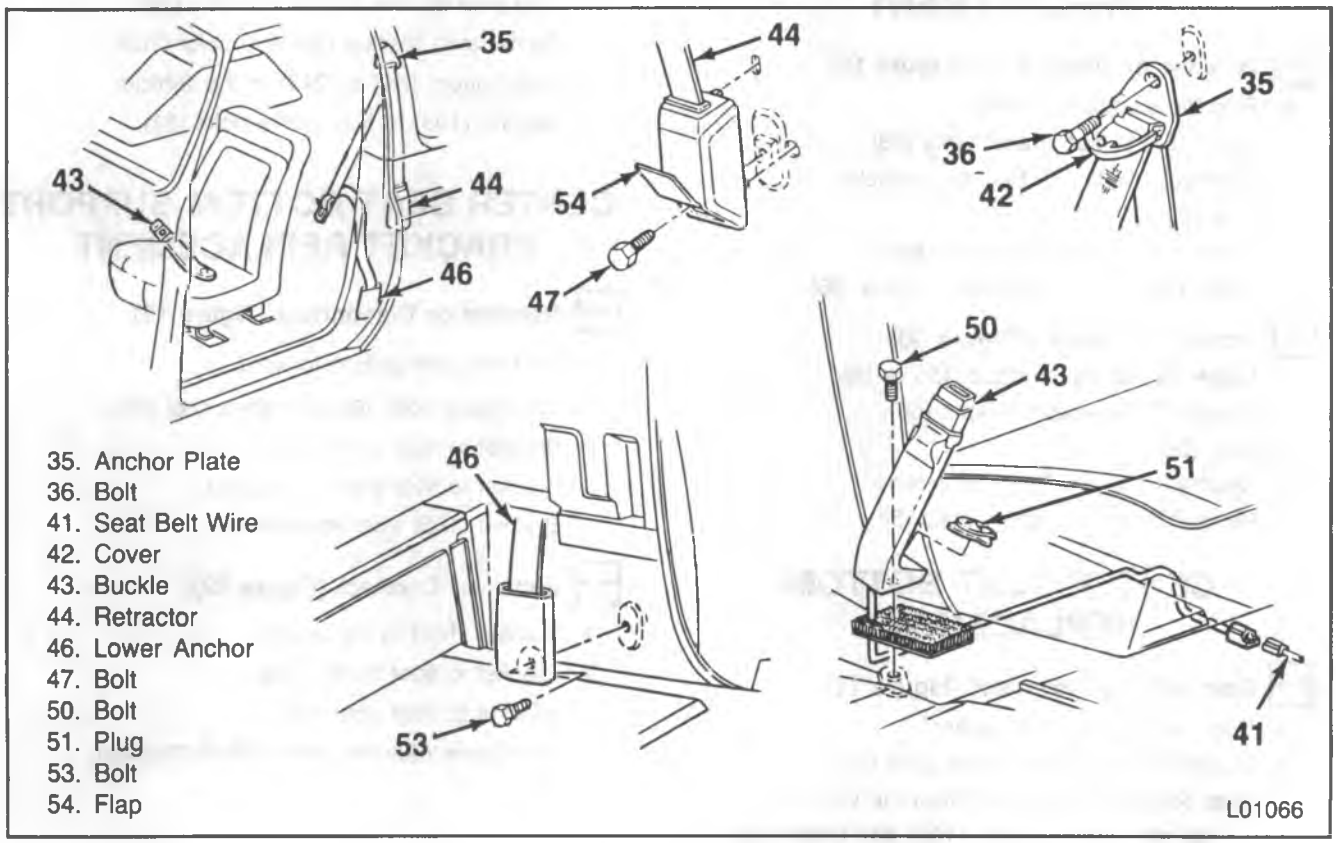

Figure 8—High Back Bucket Seat Belt Components

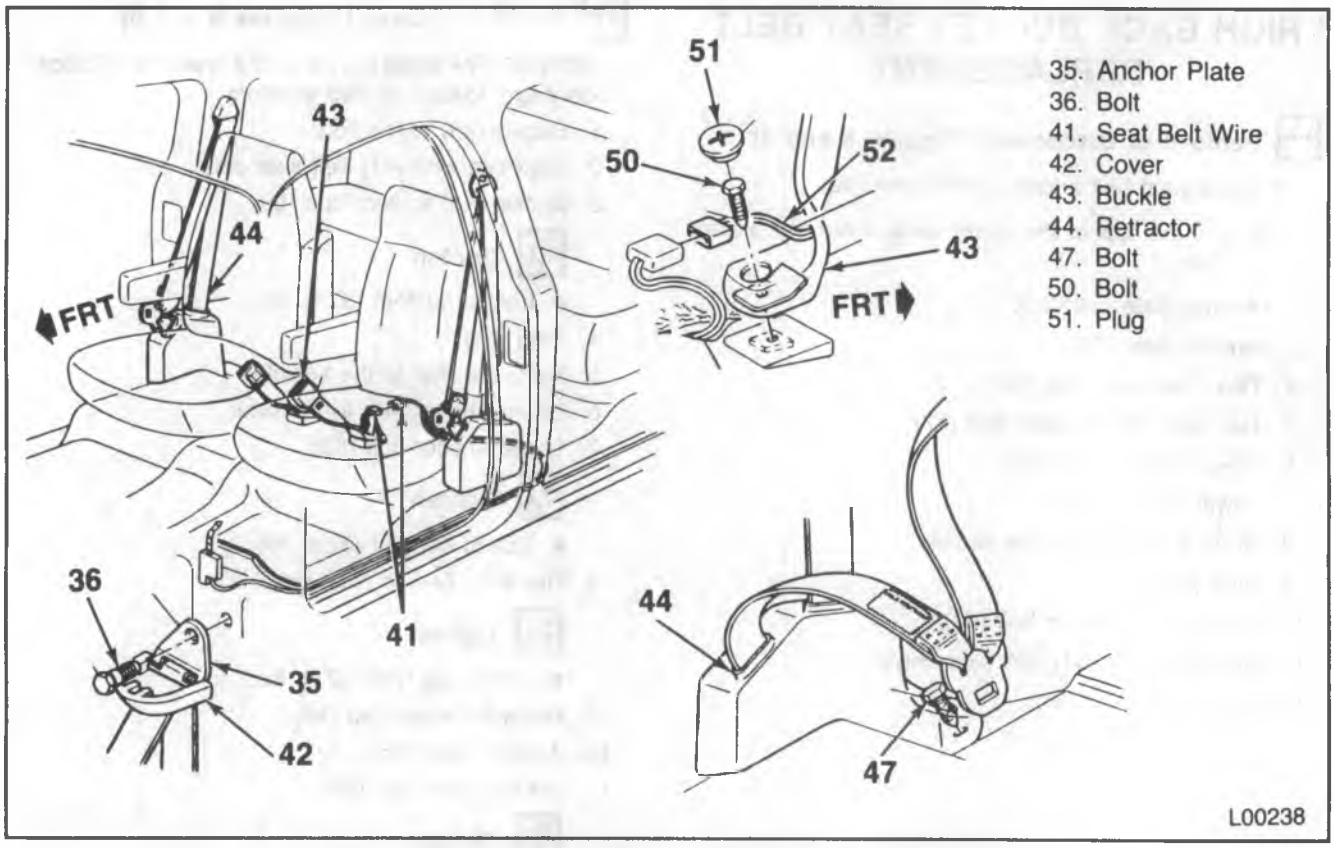

35. Anchor Plate
36. Bolt
41. Seat Belt Wire
42. Cover
43. Buckle
44. Retractor
47. Bolt
50. Bolt
51. Plug

Figure 9—High Back Bucket Belt Components—Suburban

CENTER SEATBACK REPLACEMENT

Remove or Disconnect (Figure 10)

- Fold the seatback forward.

1. Hinge (57) to floor panel bolts (58).
2. Seatback (55 or 56) from the vehicle.
3. Seal (59).
4. Hinge (57) to seatback bolts (60).
5. Hinge (57) from the seatback (55 or 56).

Install or Connect (Figure 10)

1. Hinge (57) to the seatback (55 or 56).
2. Hinge (57) to seatback bolts (60).
3. Seal (59).
4. Seatback (55 or 56) to the vehicle.
5. Hinge (57) to floor panel bolts (58).

CENTER SEAT BOTTOM REPLACEMENT

Remove or Disconnect (Figure 11)

- Fold the seat bottom forward.

1. Bracket (105) to floor panel bolts (61).
2. Seat bottom (248 or 249) from the vehicle.
3. Center stop bracket bolts (103) and bracket (64).
4. Side stop bracket bolts (104) and brackets (63).

Install or Connect (Figure 11)

1. Side stop bracket (63) and bolts (104).
2. Center stop bracket (64) and bolts (103).
3. Seat bottom (248 or 249) to the vehicle.
4. Bracket (105) to floor panel bolts (61).

CENTER SEAT BOTTOM SUPPORT BRACKET REPLACEMENT

Remove or Disconnect (Figure 12)

- Fold the seat bottom forward.

1. Trim panel bolts (69) and the panel (68).
2. Bracket to seat bolts (67).
3. Bracket to floor panel bolts (61).
4. Bracket (105) from the vehicle.

Install or Connect (Figure 12)

1. Bracket (105) to the vehicle.
2. Bracket to floor panel bolts.
3. Bracket to seat bolts (67).
4. Trim panel (68) and bolts (69) to the seat.

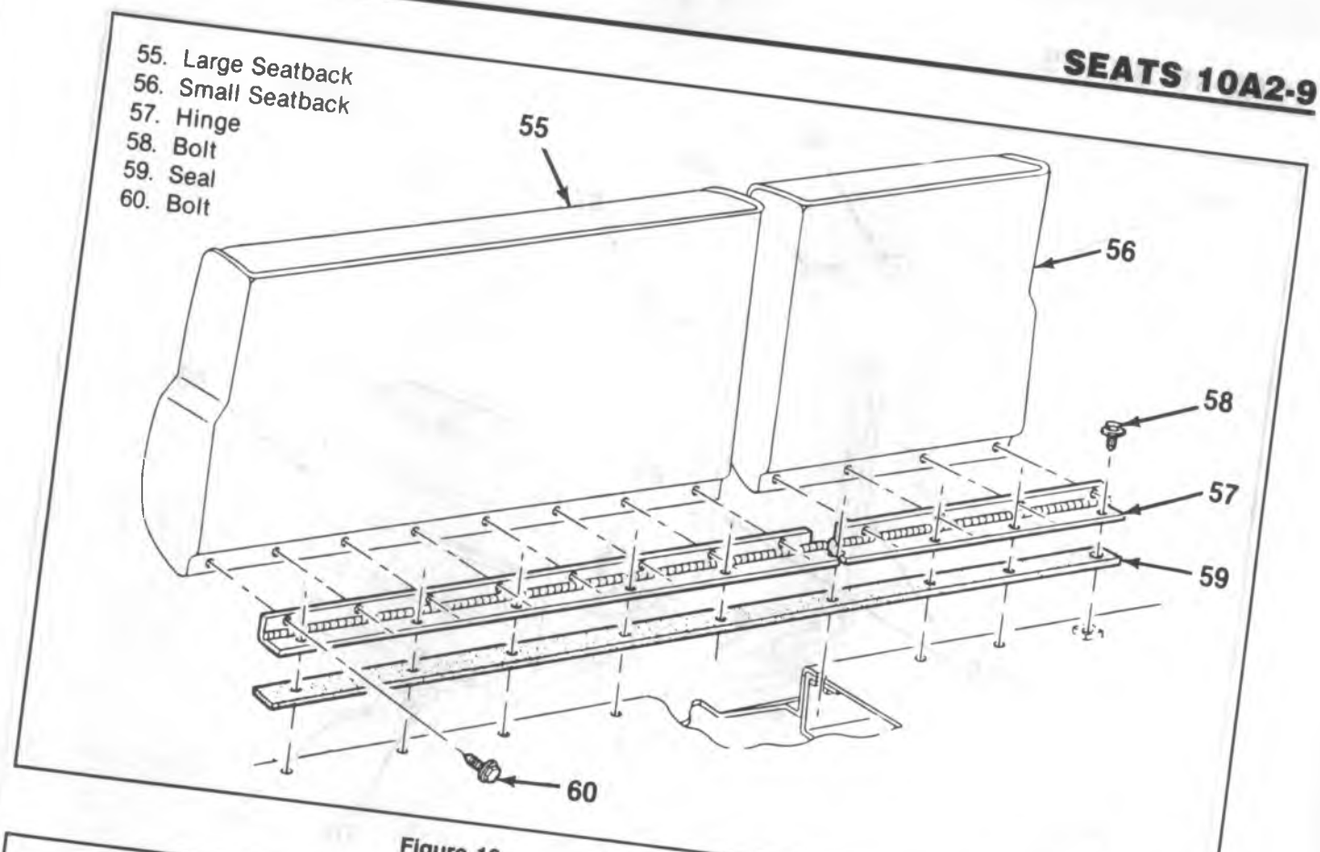

Figure 10—Center Seat Back Mounting

F-00594

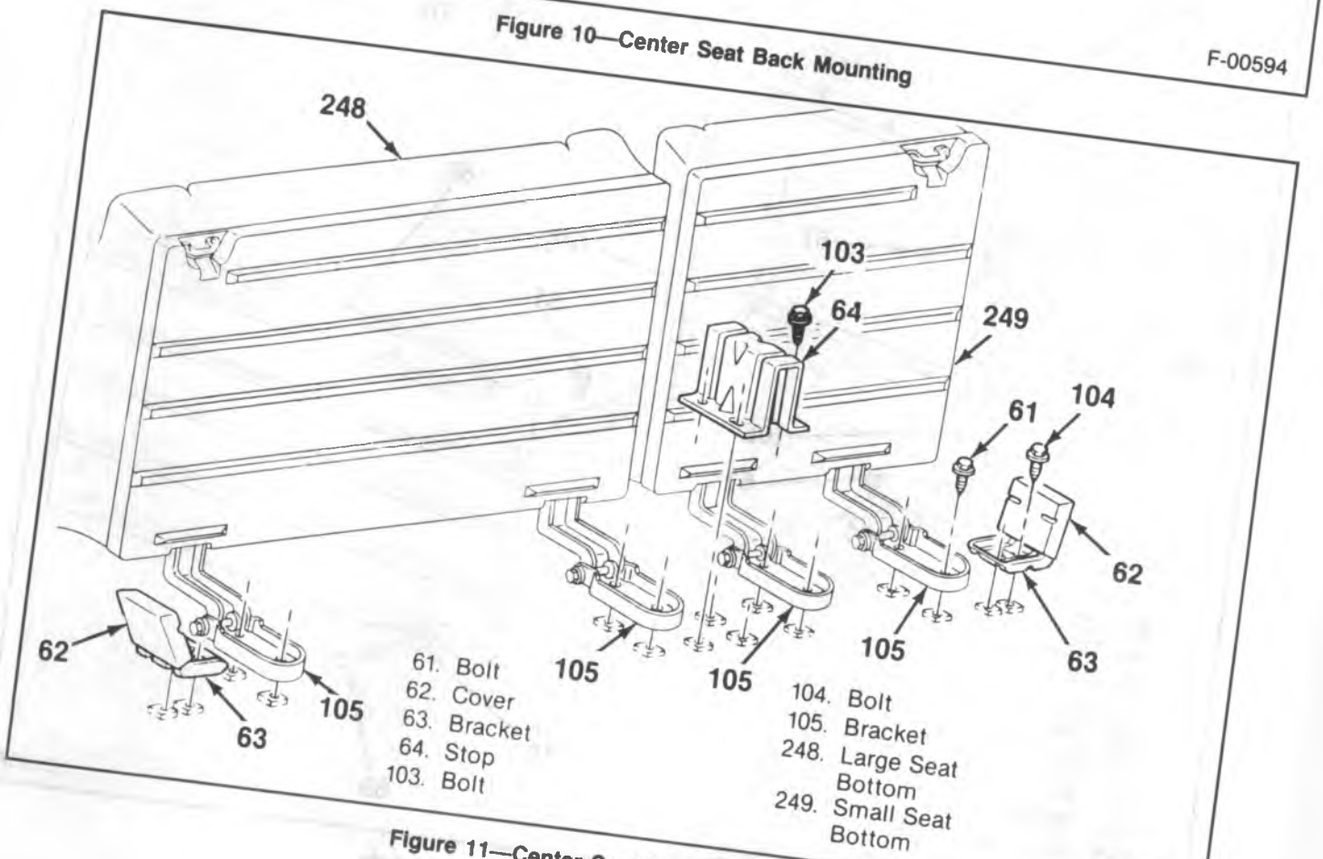

Figure 11—Center Seat Body Mounting

F-00595

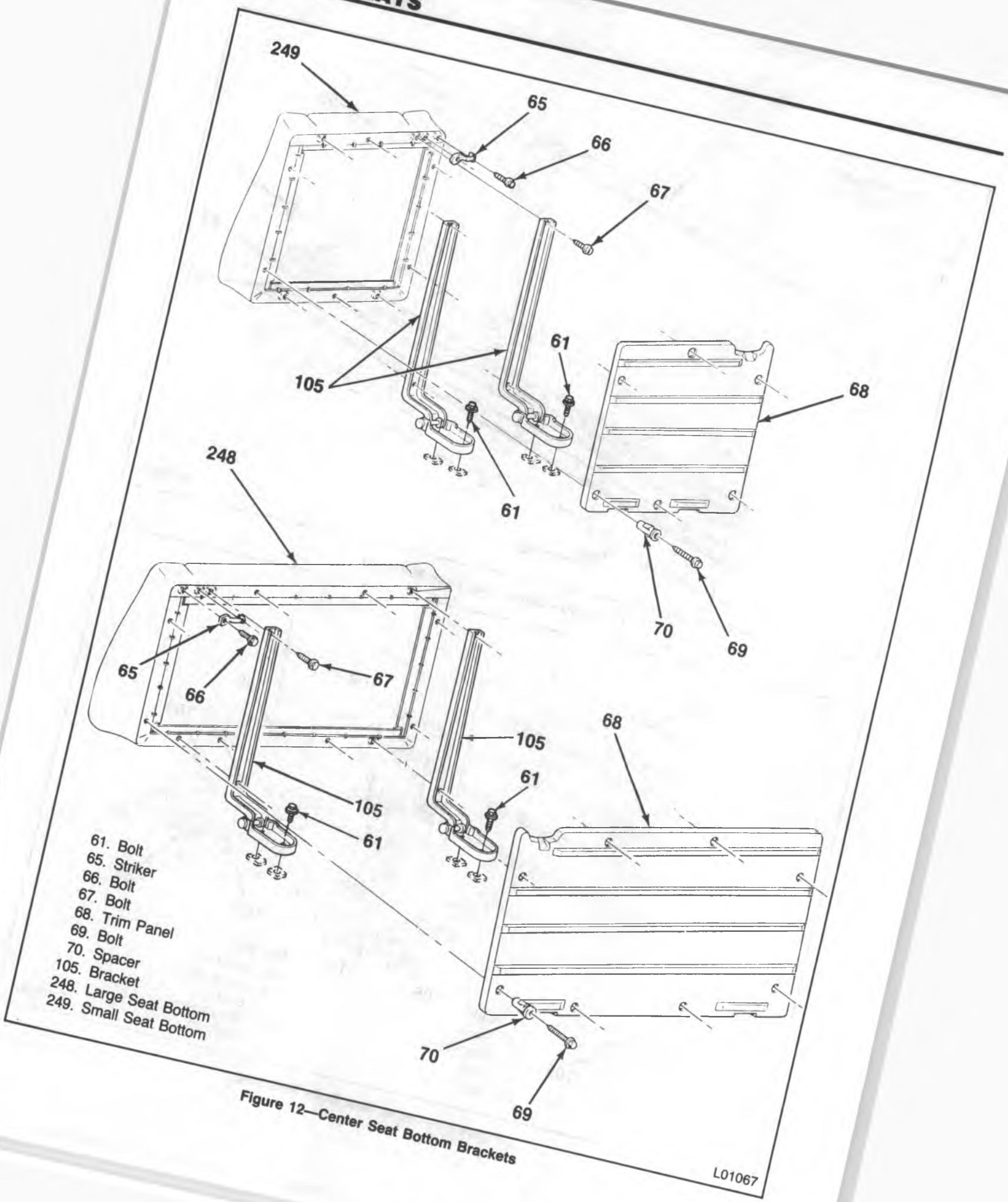

Figure 12—Center Seat Bottom Brackets

CENTER SEATBACK BUMPER AND STRIKER REPLACEMENT

Remove or Disconnect (Figure 13)

- Fold the seatback forward.

1. Bumper cover screws (72) and bumper covers (73).
2. Bumper (75) to seat bolts (74).
3. Bumpers (75).
4. Striker bolts (76).
5. Striker (77).
6. Spacer (78).
7. Plate (79).

Install or Connect (Figure 13)

1. Plate (79).
2. Spacer (78) as required.
3. Striker (77).
4. Striker bolts (76).
5. Bumpers (75).
6. Bumper (75) to seat bolts (74).
7. Bumper covers (73) and bumper cover screws (72).

CENTER SEAT BOTTOM STRIKER REPLACEMENT

Remove or Disconnect (Figure 12)

- Fold the seat bottom forward.

1. Striker (65) to seat bolts (66).
2. Striker (65) from the seat.

Install or Connect (Figure 12)

1. Striker (65) to the seat.
2. Striker (65) to seat bolts (66).

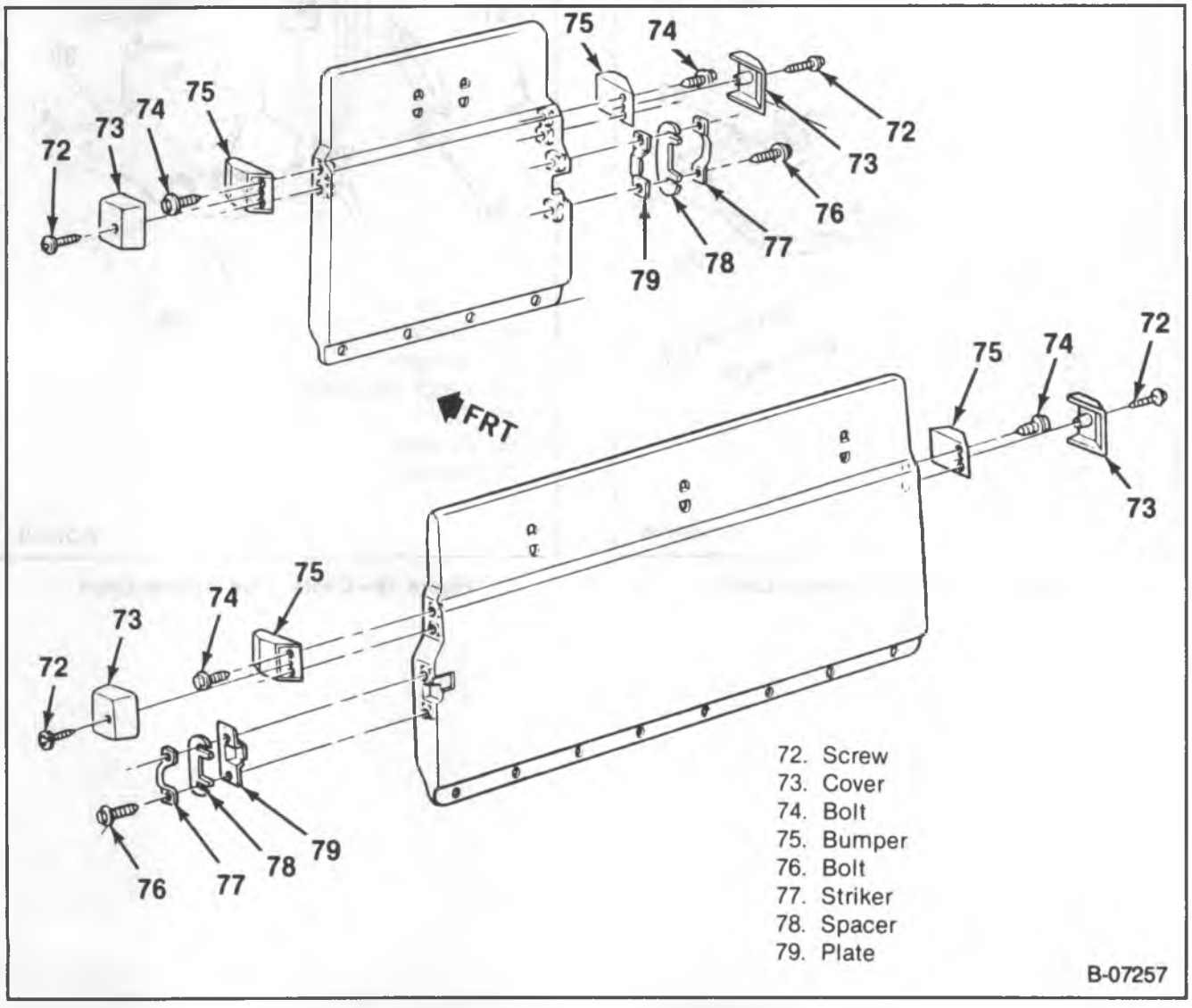

Figure 13—Center Seatback Bumper and Striker Components

CENTER SEATBACK LATCH REPLACEMENT

Remove or Disconnect (Figure 14)

- Fold the seatback forward.

1. Latch bolts (83).
2. Latch (82) from the vehicle.

Install or Connect (Figure 14)

1. Latch (82) to the vehicle.
2. Latch bolts (83).

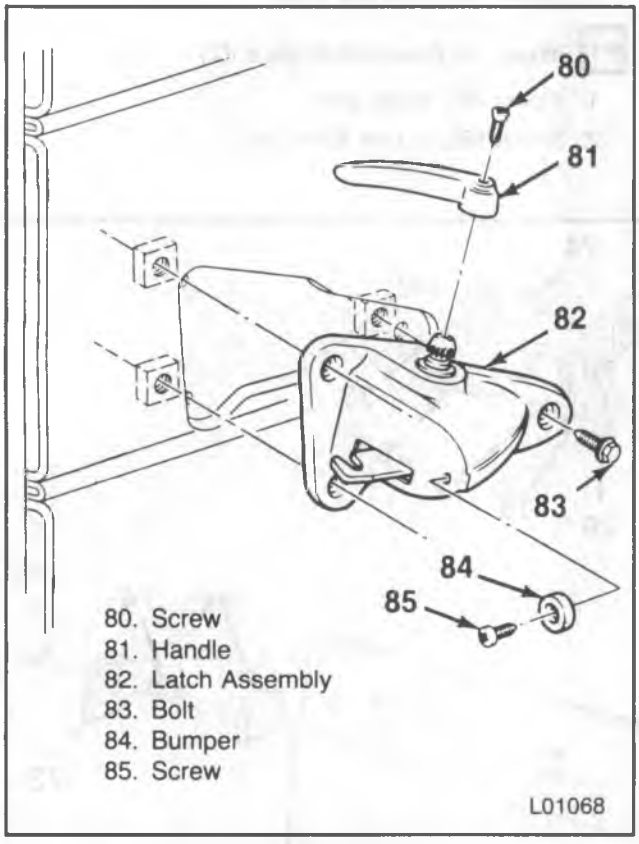

Figure 14—Center Seatback Latch

CENTER SEAT BOTTOM LATCH REPLACEMENT

Remove or Disconnect (Figure 15)

- Fold the seat bottom forward.

1. Latch to floor panel bolts (89).
2. Latch (88) from the vehicle.

Install or Connect (Figure 15)

1. Latch (88) to the vehicle.
2. Latch to floor panel bolts (89).

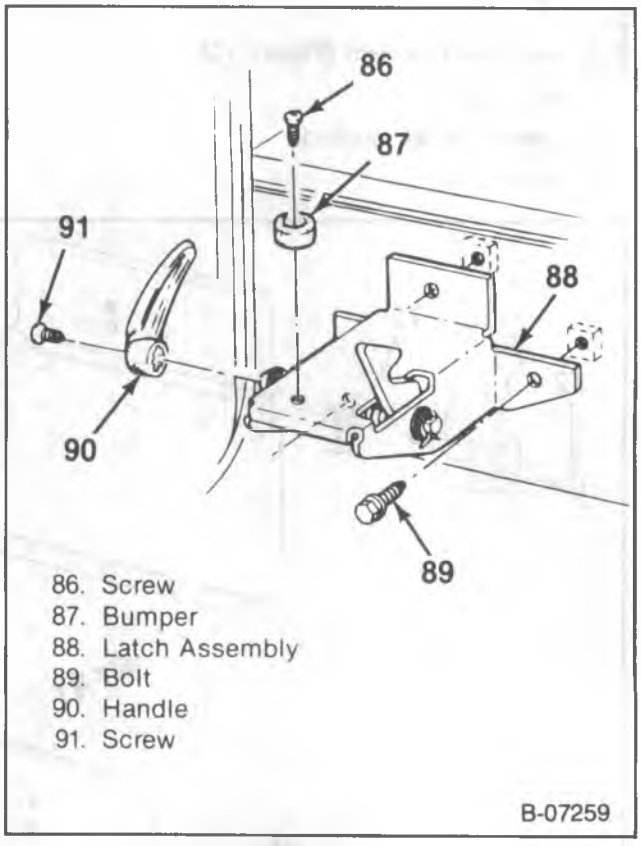

Figure 15—Center Seat Bottom Latch

CENTER SEAT BELT REPLACEMENT

Remove or Disconnect (Figure 16)

- Fold the seat bottoms forward.
- Note the position of the belts.

1. Upper seat belt anchor plate cover (101).
   - Pry the cover away from the anchor plate.
2. Anchor plate bolt (94).
3. Anchor plate (102) from the body panel.
4. Retractor bolts (93).
5. Retractor (92) from the vehicle.
6. Guide assembly bolts (97) and the guides (96).
7. Buckle (95) and latch plate (99) assembly bolts (98).
8. Buckle and latch plate assemblies from the vehicle.

Install or Connect (Figure 16)

NOTICE: For steps 2, 5 and 7 refer to "Notice" on page 10A2-1 of this section.

1. Buckle (95) and latch plate (99) assemblies to the vehicle.
2. Buckle and latch plate assembly bolts (98).

   Tighten

   - Bolt to 50 N•m (37 ft. lbs.).
3. Guide assemblies (96) and guide bolts (97).
4. Retractor (92) to the vehicle.
5. Retractor bolts (93).

   Tighten

   - Retractor bolts to 50 N•m (37 ft. lbs.).
6. Anchor plate (102) to the body pillar.

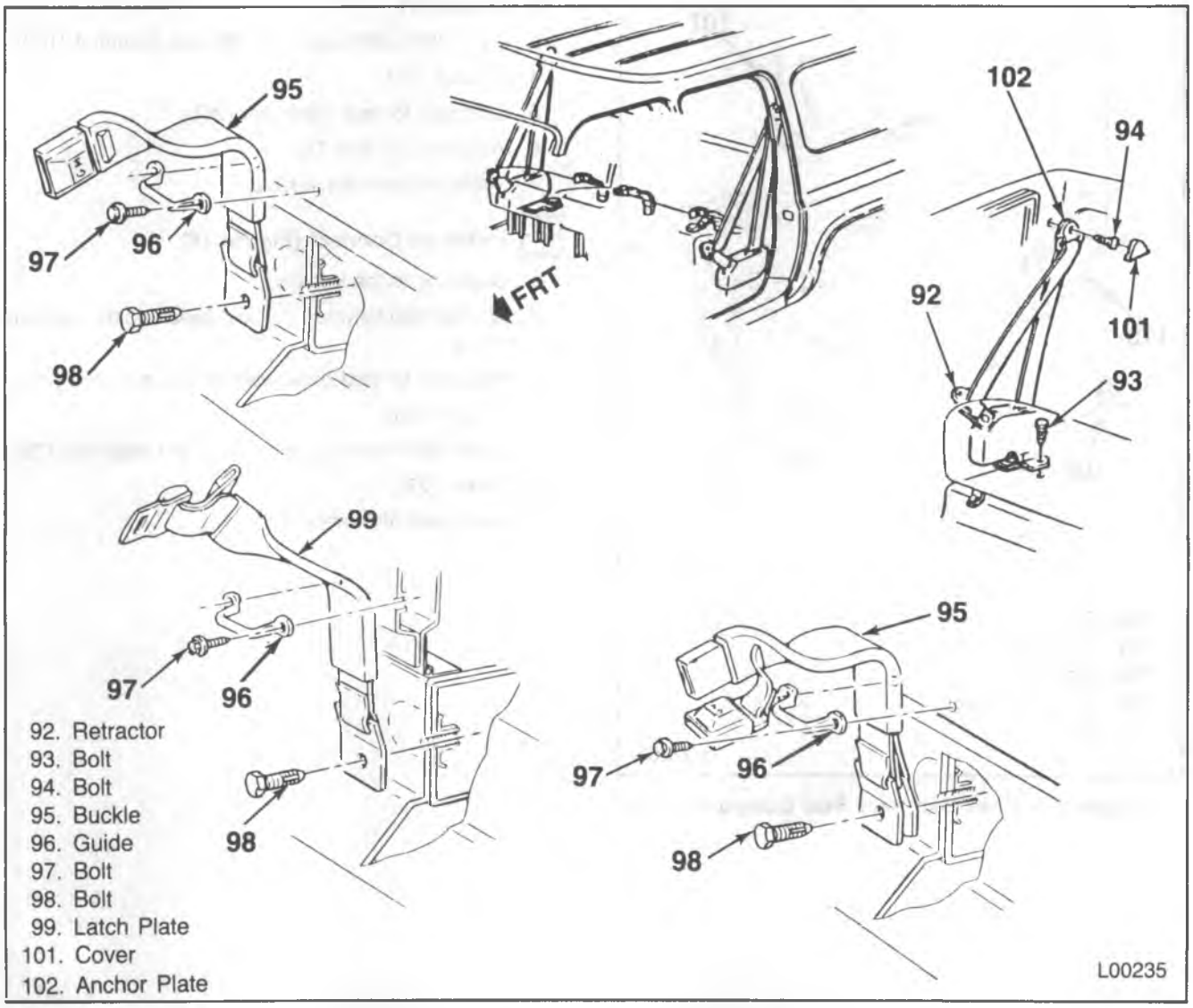

Figure 16—Center Seat Belt Components

7. Anchor plate bolt (94).

Tighten

- Bolt to 50 N•m (37 ft. lbs.).

8. Cover (101) to the anchor plate (102).

CREW CAB REAR SEAT REPLACEMENT

Remove or Disconnect (Figure 17)

1. Rear bracket (107) to floor bolts (106).
2. Front bracket (109) to floor bolts (110).

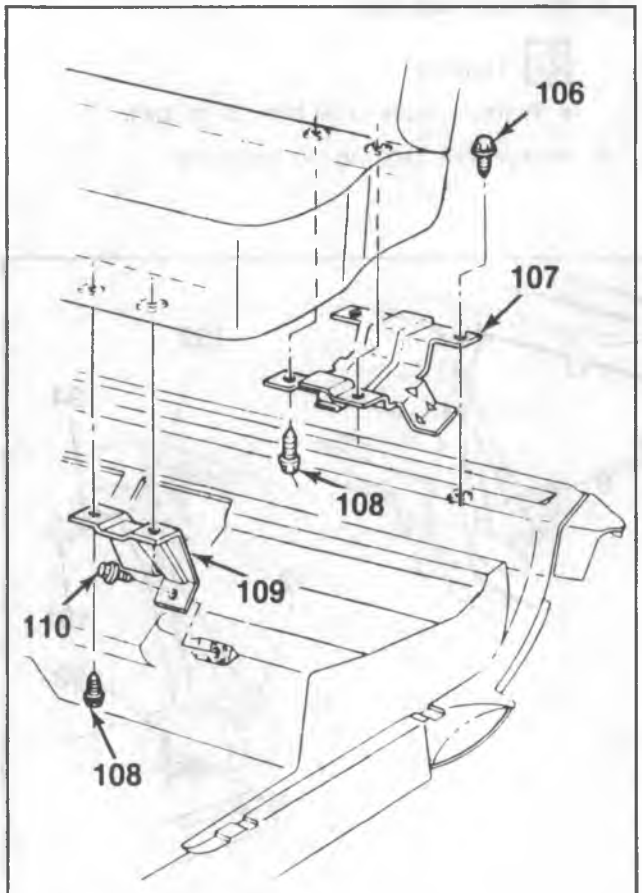

106. Bolt
107. Rear Bracket
108. Bolt
109. Front Bracket
110. Bolt

B-07261

Figure 17—Crew Cab Rear Seat Components

3. Seat from the vehicle.
4. Front and rear bracket to seat bolts (108).
5. Rear bracket (107).
6. Front bracket (109).

Install or Connect (Figure 17)

1. Front bracket (109) and bolts (108).
2. Rear bracket (107) and bolts (108).
3. Seat to the vehicle.
4. Front bracket (109) to floor bolts (110).
5. Rear bracket (107) to floor bolts (106).

CREW CAB REAR SEATBACK AND CATCH REPLACEMENT

Remove or Disconnect (Figure 18)

1. Seat back trim cover (32).
2. Striker (27).
3. Catch (28) with bushings (29) and grommet (100).
4. Washer (30).
5. Seatback to seat base bolt (26).
6. Washers (30 and 71).
7. Seatback from the vehicle.

Install or Connect (Figure 18)

1. Seatback to the vehicle.
2. Washer (30) between the seat base and the seatback frame.
3. Seatback to seat base washer (71) and bolt (26).
4. Washer (30).
5. Catch (28) with grommet (100) and bushings (29).
6. Striker (27).
7. Seat back trim cover (32).

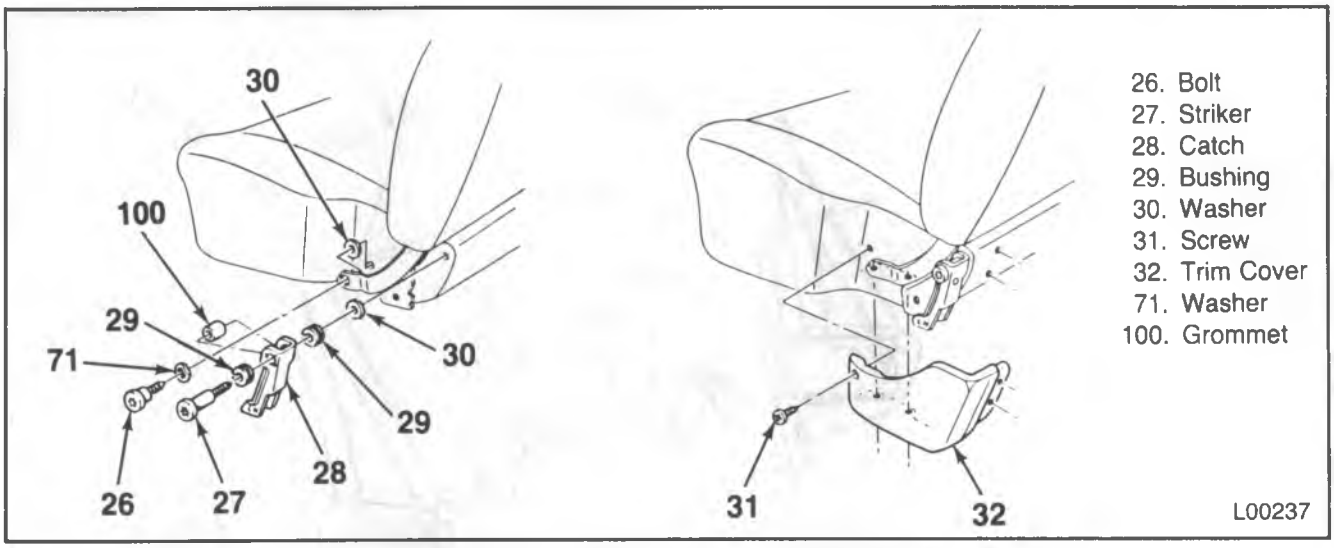

Figure 18—Rear Seat Back Catch Components

CREW CAB REAR SEAT BELT REPLACEMENT

RETRACTOR REPLACEMENT

Remove or Disconnect (Figure 19)

1. Cover.
2. Retractor to cab panel bolts (267).
3. Retractor floor panel bolts (266).
4. Retractor (261 or 262) from the floor panel.

Install or Connect (Figure 19)

NOTICE: For steps 2 and 3 refer to "Notice" on page 10A2-1 of this section.

1. Retractor (261 or 262) to the floor panel.
2. Retractor to floor panel bolts (266).

   Tighten

   - Bolt to 55 N•m (40 ft. lbs.).
3. Retractor to cab panel bolts (267).

   Tighten

   - Bolt to 55 N•m (40 ft. lbs.).
4. Cover (268).

CENTER BUCKLE AND LATCH PLATE REPLACEMENT

Remove or Disconnect (Figure 19)

1. Seat. Refer to "Crew Cab Rear Seat Replacement."

   - Note the position of the belts.
2. Belt to floor panel bolts (264).
3. Left buckle (265) and right buckle (263) from the vehicle.

Install or Connect (Figure 19)

1. Left buckle (265) and right buckle (263) to the vehicle.

NOTICE: For step 2 refer to "Notice" on page 10A2-1 of this section.

2. Belt to floor panel bolts (264).

   Tighten

   - Bolt to 55 N•m (40 ft. lbs.).
3. Seat. Refer to "Crew Cab Rear Seat Replacement."

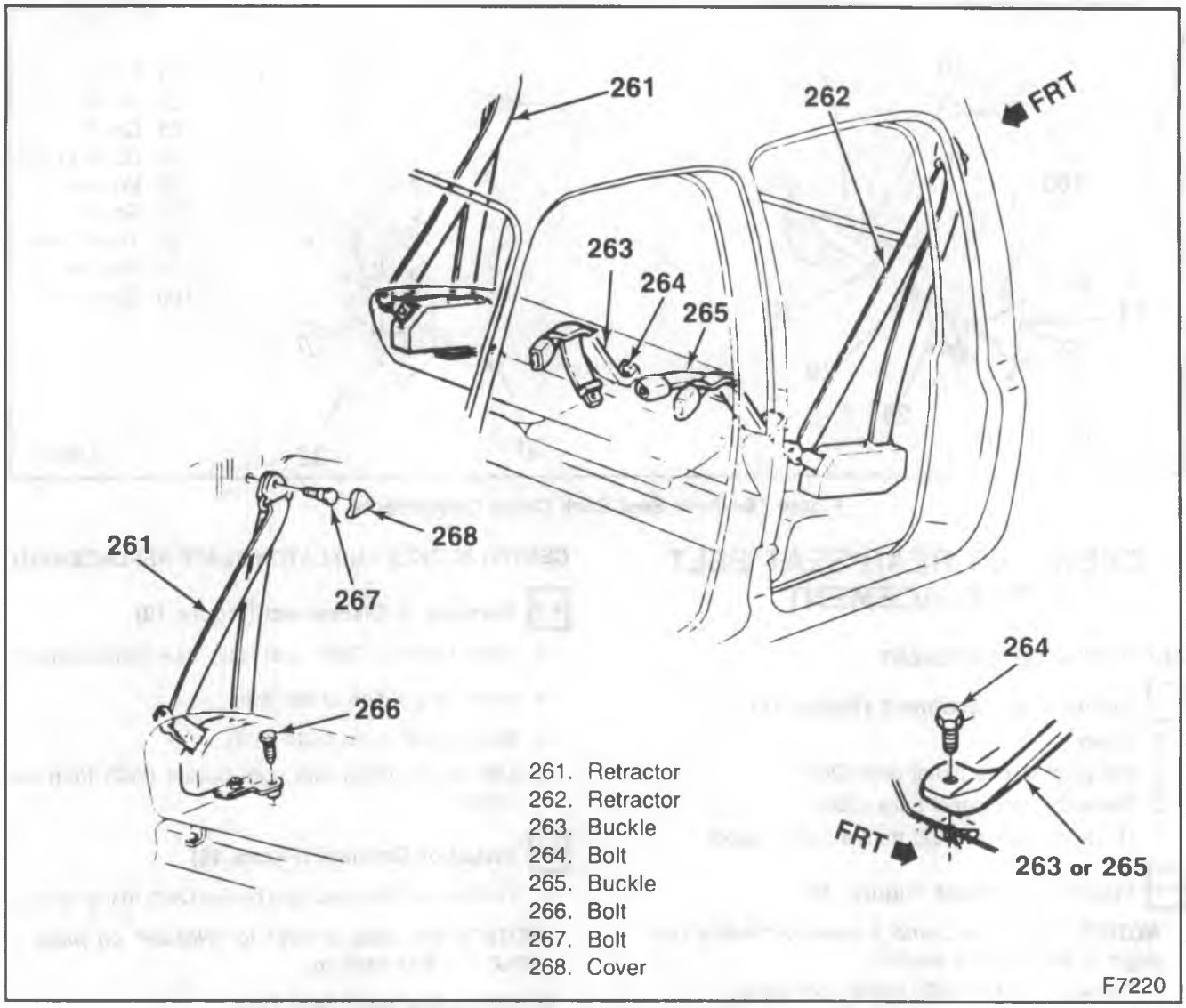

Figure 19—Crew Cab Rear Seat Belt Components

UTILITY VEHICLE REAR SEAT REPLACEMENT

Remove or Disconnect (Figure 20)

- Fold the seat forward.

1. Hinge to floor bolt (116) and spring washer (117).
2. Seat from the vehicle.

Install or Connect (Figure 20)

1. Seat to the vehicle.
2. Spring washer (117) and bolt (116).

UTILITY VEHICLE REAR SEAT COVER ROD REPLACEMENT

Remove or Disconnect (Figure 21)

1. Actuator rod clip (123).
2. Actuator rod (124).

Install or Connect (Figure 21)

1. Actuator rod (124).
2. Actuator rod clip (123).

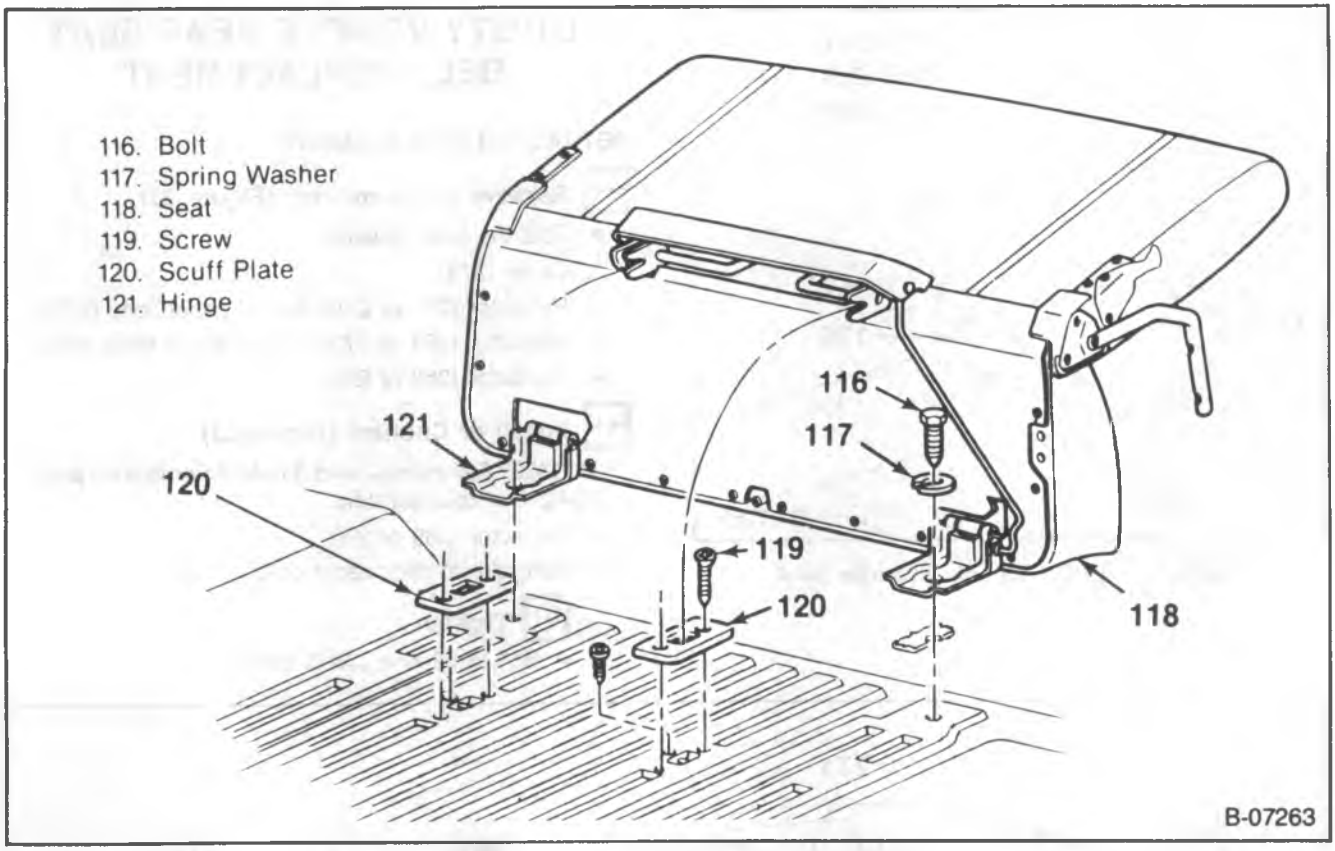

Figure 20—Utility Vehicle Rear Seat Components

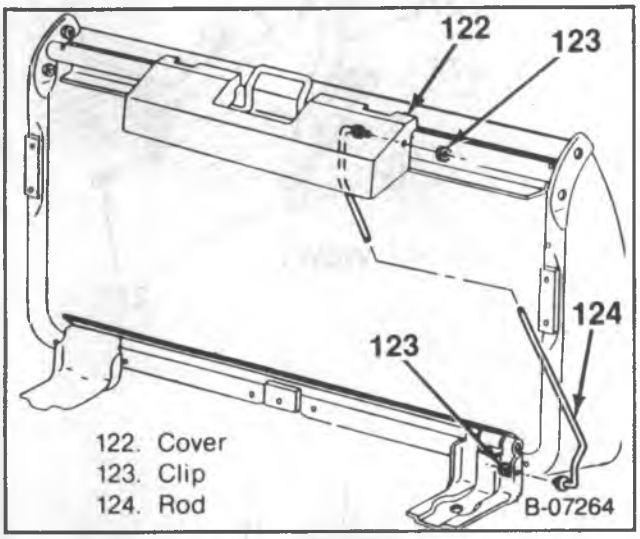

Figure 21—Utility Vehicle Cover Rod

UTILITY VEHICLE REAR SEAT STORAGE STRUT REPLACEMENT

Remove or Disconnect (Figure 22)

- Tilt the seat forward.

1. Strut (125) to floor bolts (126).
2. Strut (125) to seat bolts (127).
3. Strut (125) from the vehicle.

Install or Connect (Figure 22)

1. Strut (125) to the vehicle.
2. Strut (125) to seat bolts (127).
3. Strut (125) to floor bolts (126).

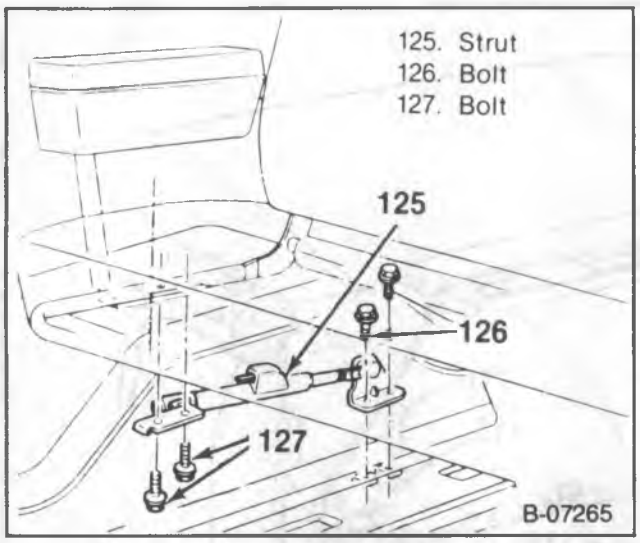

Figure 22—Utility Vehicle Storage Strut

UTILITY VEHICLE REAR SEAT BELT REPLACEMENT

RETRACTOR REPLACEMENT

Remove or Disconnect (Figure 23)

- Fold the seat forward.

1. Cover (271).
2. Retractor (269 or 270) to roof panel bolts (272).
3. Retractor (269 or 270) to floor panel bolts (273).
4. Retractor (269 or 270).

Install or Connect (Figure 23)

NOTICE: For steps 2 and 3 refer to notice on page 10A2-1 of this section.

1. Retractor (269 or 270).
2. Retractor to floor panel bolts (273).

Tighten

- Bolt to 52 N•m (38 ft. lbs.).

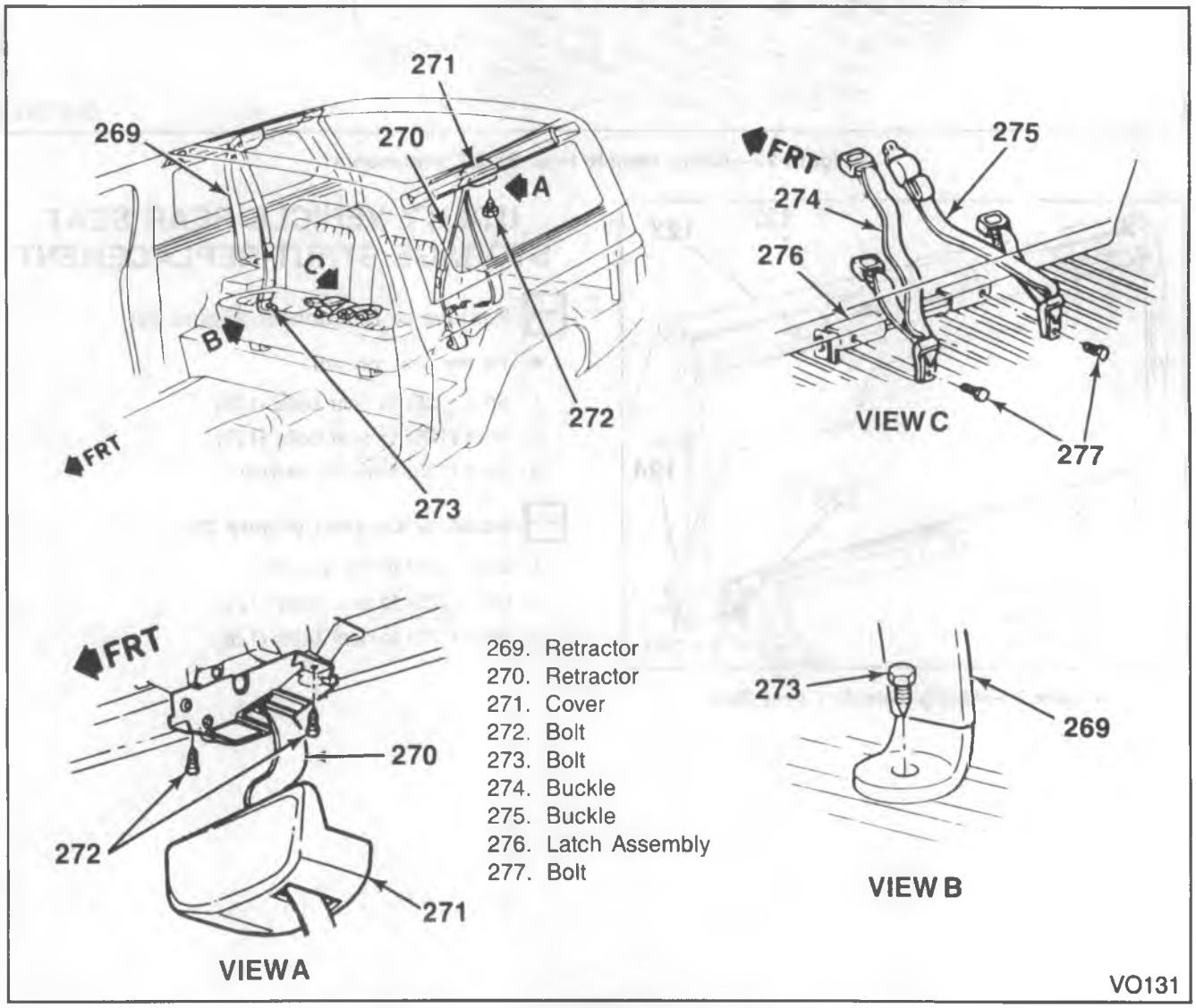

Figure 23—Utility Vehicle Rear Seat Belts

3. Retractor to roof panel bolts.

Tighten

- Bolts to 27 N•m (20 ft. lbs.).

4. Cover (271).

CENTER BUCKLE REPLACEMENT

Remove or Disconnect (Figure 23)

- Fold the seat forward.
- Note the position of the belts.

1. Buckle (274 or 275) to latch assembly bolts (277).
2. Left buckle (274) and right buckle (275) from the latch assembly (276).

Install or Connect (Figure 23)

NOTICE: For step 1 refer to "Notice" on page 10A2-1 of this section.

1. Left buckle (274) and right buckle (275) to the latch assembly (276) with bolts.

Tighten

- Bolts to 38 N•m (28 ft. lbs.).

UTILITY VEHICLE AND SUBURBAN SEATBACK AND HINGE REPLACEMENT

Remove or Disconnect (Figures 24 and 25)

1. Seatback to hinge bolts (139).
2. Seatback (154) from the vehicle.
3. Hinge (153) to seat bottom bolts (137).
4. Hinge (153) from the vehicle.
5. Armrest to hinge bolt (136).
6. Armrest support (138) from the hinge.

Install or Connect (Figures 24 and 25)

1. Armrest (133) to the hinge.
2. Armrest to hinge bolt (136).
3. Hinge (153) to the vehicle.
4. Hinge (153) to seat bottom bolts (137).
5. Seatback (154) to the vehicle.
6. Seatback to hinge bolts (139).

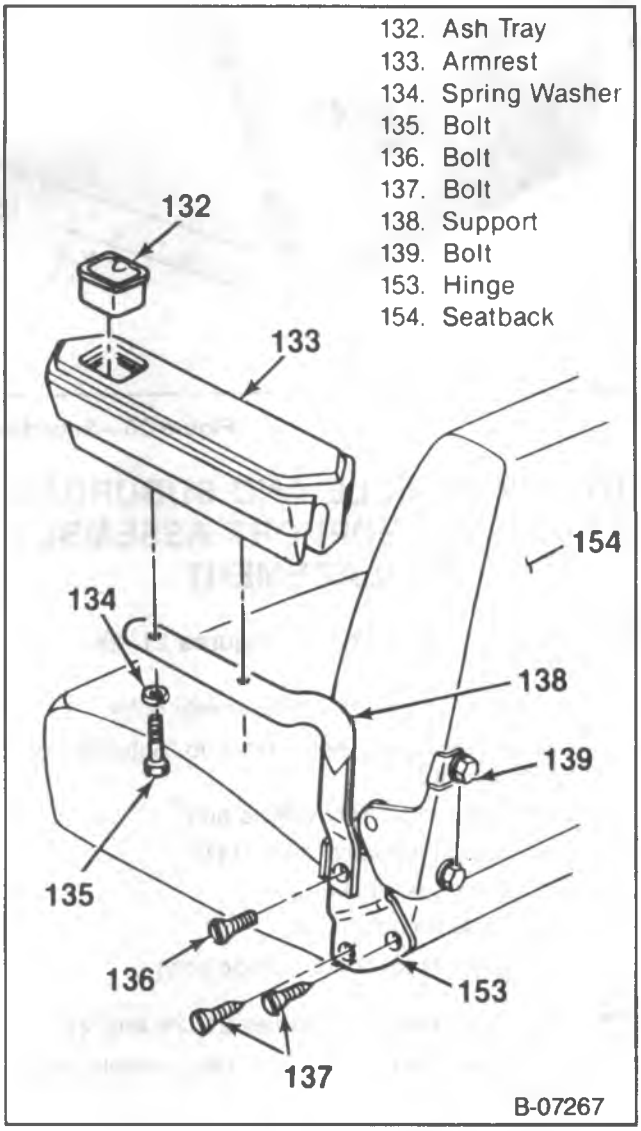

Figure 24—Left Seatback Hinge

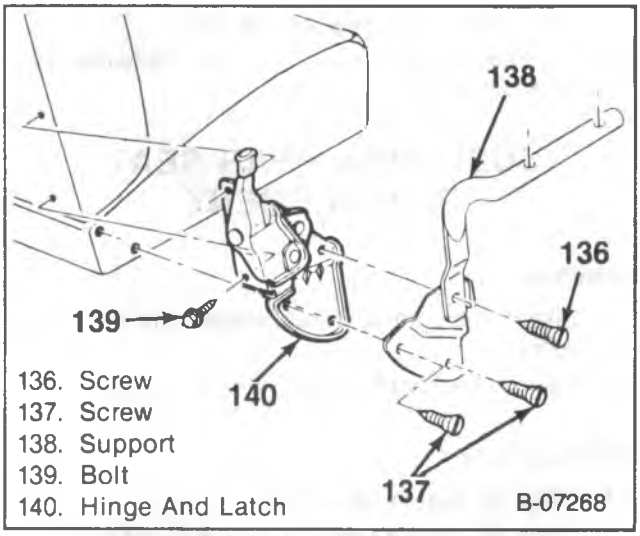

Figure 25—Right Seatback Hinge

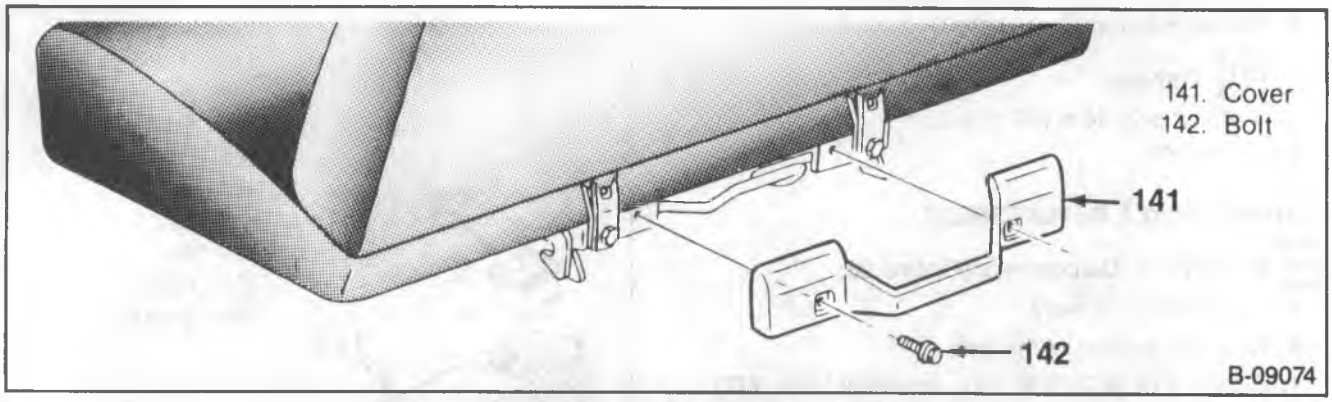

Figure 26—Suburban Rear Seat Latch Cover

UTILITY VEHICLE AND SUBURBAN LATCH AND SUPPORT ASSEMBLY REPLACEMENT

Remove or Disconnect (Figures 21, 26 and 27)

- Fold the seat forward (Utility vehicle only).

1. The seat (Suburban only). Refer to "Suburban Seat Replacement."
2. Latch cover rod (Utility vehicle only).
3. Latch cover (Suburban only) (141).
4. Latch to seat bolts (145).
5. Latch (144) from the seat.
6. Latch cover (143) (Utility vehicle only).

Install or Connect (Figures 21, 26 and 27)

1. Latch cover (143) to the seat (Utility vehicle only).
2. Latch (144) to the seat.
3. Latch to seat bolts (145).
4. Latch cover (141) (Suburban only).
5. Latch cover rod (Utility vehicle only).
6. The seat (Suburban only). Refer to "Suburban Seat Replacement."

SUBURBAN REAR SEAT REPLACEMENT

REMOVAL

1. Unlatch the seat, and pull towards the rear of the vehicle.
2. Remove the seat from the vehicle.

INSTALLATION

1. Place the seat in the vehicle.
2. Place the hooked retainers onto the anchor pins.
3. Latch the seat.
4. Push back and forth on the seat to be sure it is latched.

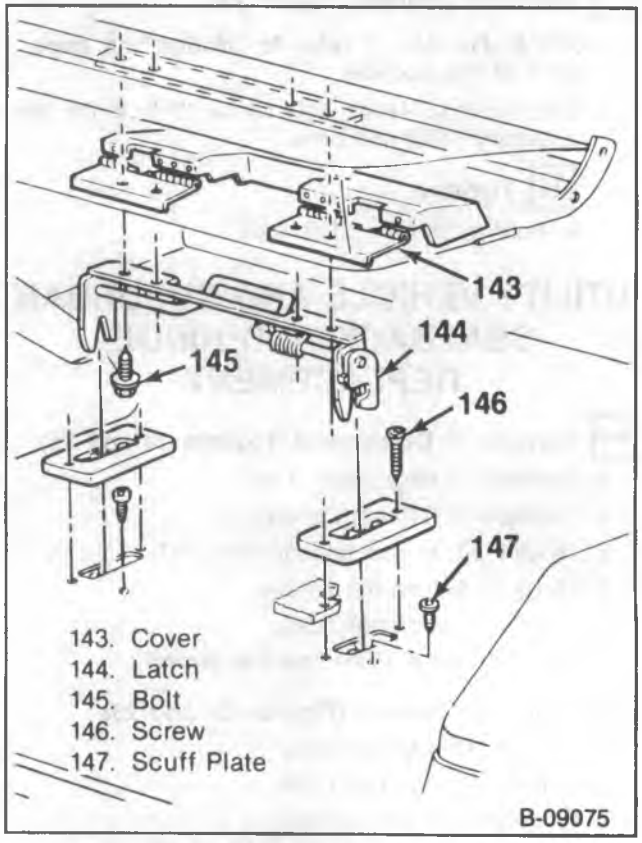

Figure 27—Rear Seat Latch Components

SUBURBAN REAR SEAT BELT REPLACEMENT

Remove or Disconnect (Figure 28)

1. Cover (284).
2. Retractor to roof panel bolts (283).
3. Retractor to floor panel bolts (280).
4. Retractor cover (278).
5. Retractor to body panel bolts (285).
6. Retractor (279 or 286).
7. Seal (287).

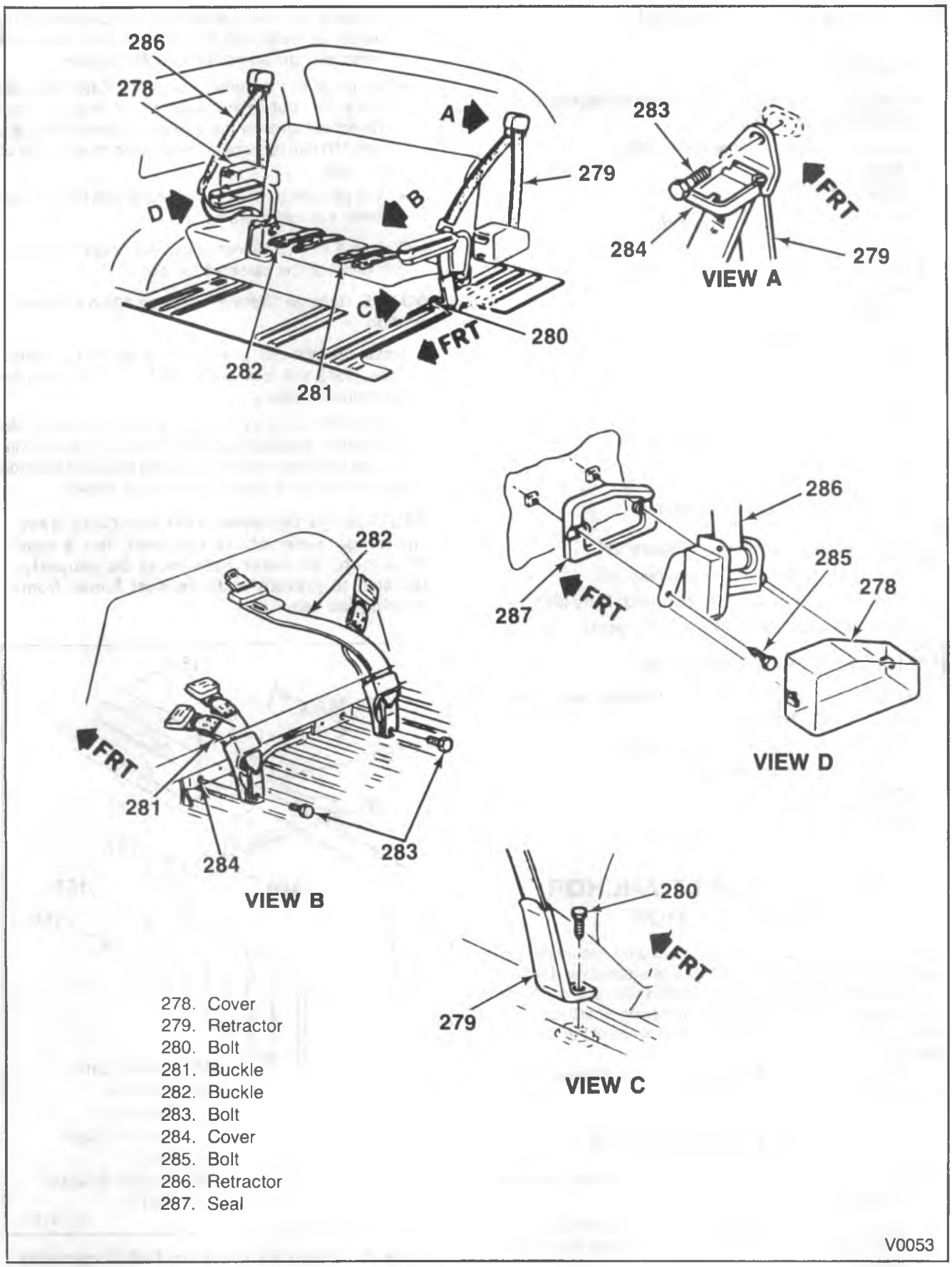

Figure 28—Suburban Rear Seat Belts

Install or Connect (Figure 28)

1. New seal (287).
2. Retractor (279 or 286).

NOTICE: For steps 3, 5 and 6 refer to "Notice" on page 10A2-1 of this section.

3. Retractor to body panel bolts (285).

Tighten

- Bolts to 67 N•m (49 ft. lbs.).

4. Retractor cover (278).
5. Retractor to floor panel bolts (280).

Tighten

- Bolts to 50 N•m (37 ft. lbs.).

6. Retractor to roof panel bolts.

Tighten

- Bolts to 50 N•m (37 ft. lbs.).

7. Cover (284).

CENTER BUCKLE REPLACEMENT

Remove or Disconnect (Figure 28)

1. Rear seat latch cover (141) (figure 26).
2. Seat belts (281 and 282) from latch bolts (283).
3. Seat belts (281 and 282) from the seat.

Install or Connect (Figure 28)

NOTICE: For step 2 refer to "Notice" on page 10A2-1 of this section.

1. Seat belts (281 and 282) to the seat.
2. Seat belt to latch bolts (283).

Tighten

- Bolts to 67 N•m (49 ft. lbs.).

TOP STRAP BELT ANCHOR INSTALLATION

All hardware discussed in this procedure should be supplied or available from the child seat manufacturer. Be sure the child seat position does not conflict with any additional requirements provided by its manufacturer, or with any recommendations in the Child Restraint section of the Owner's Manual.

The child seat may be used only in a forward facing seating position.

CREW CAB MODELS

1. Place the Child Seat in the rear seating position (figure 29).
2. Secure the vehicle lap belt over the armrests of the Child Seat in the position which the Child Seat will be used.
3. Select a suitable anchor bracket mounting location on the cab back panel. The location must be:
   - Located near the rear window reinforcement. The angle between the Child Seat top strap and horizontal should not exceed 45 degrees.
   - As close to the center line of the Child Seat as possible, but in no case more than 50 mm (2-inches) towards the passenger side of the cab, and 150 mm (6-inches) towards the driver's side of the cab.
   - In a position clear of the fuel tank, fuel lines, brake lines, exhaust systems, etc.
4. Drill an 8 mm (5/16-inch) diameter hole through the cab panel at the delected location.

NOTICE: Refer to "Notice" on page 10A2-1 of this section.

5. Install the bolt (161), anchor bracket (160), anchor plate (158) and lock nut (159) to the hole with an appropriate sealant.
6. Tighten the nut to 31 N•m (23 ft. lbs.). Use the Child Seat only in the seating position for which the anchor bracket has been installed, latching the Child Seat top strap hook to the anchor bracket as shown.

CAUTION: In the event that the Child Seat anchorage assembly is removed, the 8 mm (5/16-inch) diameter hole must be properly resealed to prevent toxic exhaust fumes from entering the cab.

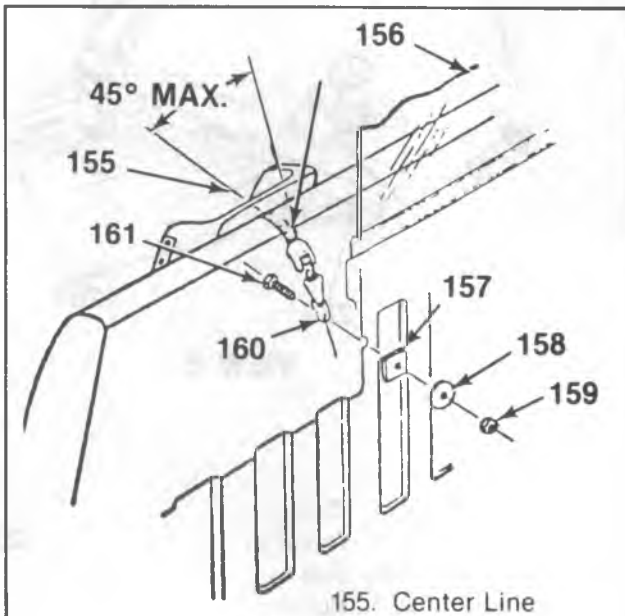

155. Center Line
156. Window
157. Sealer
158. Anchor Plate
159. Nut
160. Anchor Bracket
161. Bolt

B-09152

Figure 29—Crew Cab Top Strap Belt Components

UTILITY VEHICLE REAR SEAT

1. Determine the location for the anchor by measuring 140 mm (5 1/2-inches) forward from the rear edge of the floor pan (figure 30). Make this measurement in the center of one of the depressed floor pan ribs. Next, measure 1330 mm (52.25-inches) inboard of the right quarter inner panel. Mark the position where these measurements meet.
2. Drill an 8 mm (5/16-inch) hole at the mark.
3. To insure proper sealing of the hole, remove any dirt or foreign matter from around the hole on the underside of the floor pan where the sealer is to be applied.

NOTICE: Refer to "Notice" on page 10A2-1 of this section.

4. Place sealer on the hole from the underside of the vehicle and assemble the bolt (162), anchor plate (163), washer (165), and lock nut (166) to the floor pan.
5. Tighten the nut to 31 N•m (23 ft. lbs.). Use the Child Seat only in the seating position for which the anchor bracket has been installed.

NOTICE: In the event the Child Seat anchorage assembly is removed, the 8 mm (5/16-inch) diameter hole must be properly resealed.

SUBURBAN FRONT SEAT

This procedure applies to vehicles not equipped with a second seat or vehicles with the second seat in the down position.

1. Determine the location for the anchor by measuring 51 mm (2-inches) rearward from the rear edge of the kick up molding. Make this measurement in the center of one of the depressed floor pan ribs (figure 31).
   A. Measure 360 mm (14.6-inches) inboard of the right quarter inner panel for the right seating position.
   B. Measure 895 mm (35.25-inches) inboard of the right quarter inner panel for the center seating position.
   Mark the position where the measurements meet.
2. Drill an 8 mm (5/16-inch) hole at the mark.
3. To insure proper sealing of the hole, remove any dirt or foreign matter from around the hole on the underside of the floor pan where the sealer is to be applied.

NOTICE: Refer to "Notice" on page 10A2-1 of this section.

4. Place sealer on the hole from the underside of the vehicle and assemble the bolt (167), anchor plate (168), washer (170), and lock nut (171) to the floor pan.

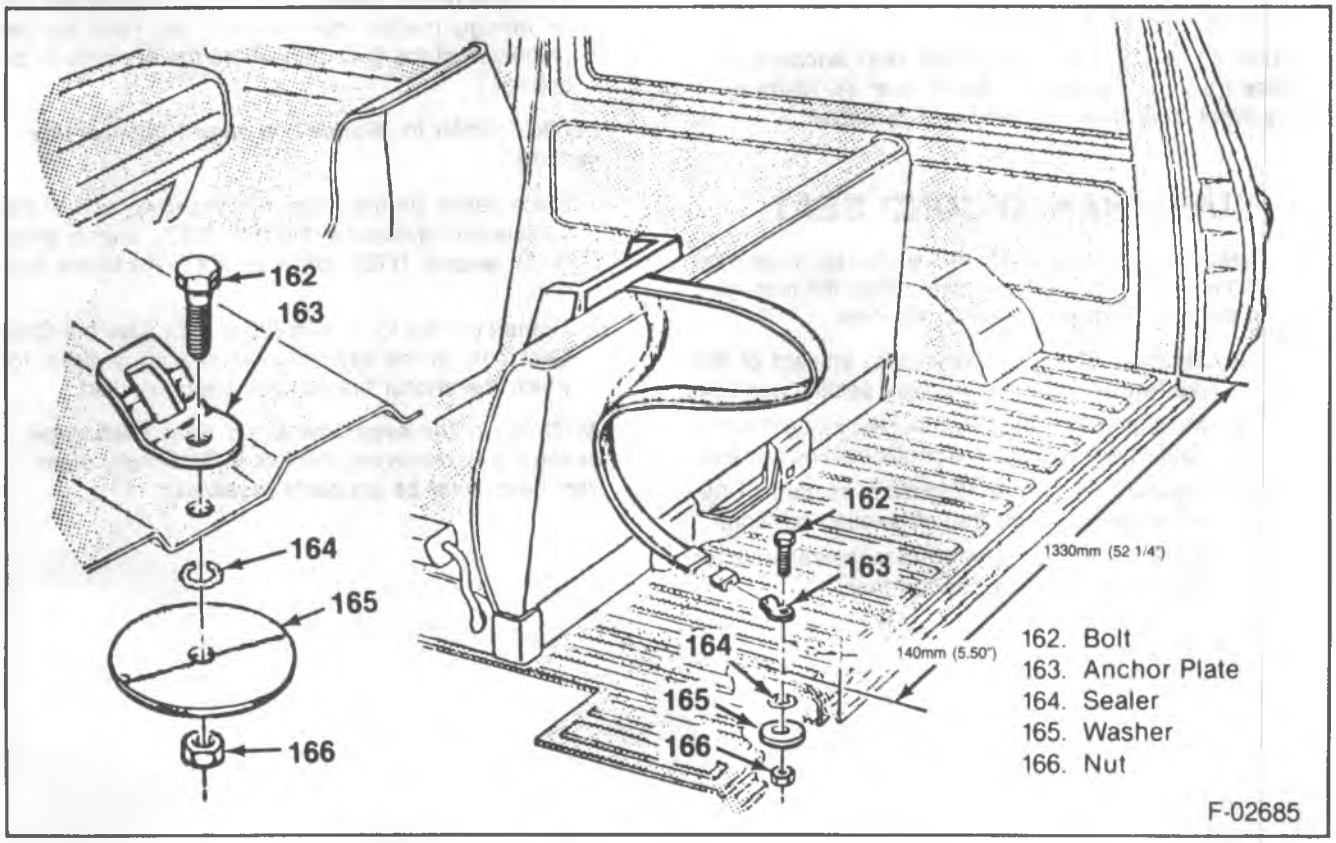

Figure 30—Utility Vehicle Second Seat Top Strap Belt Components

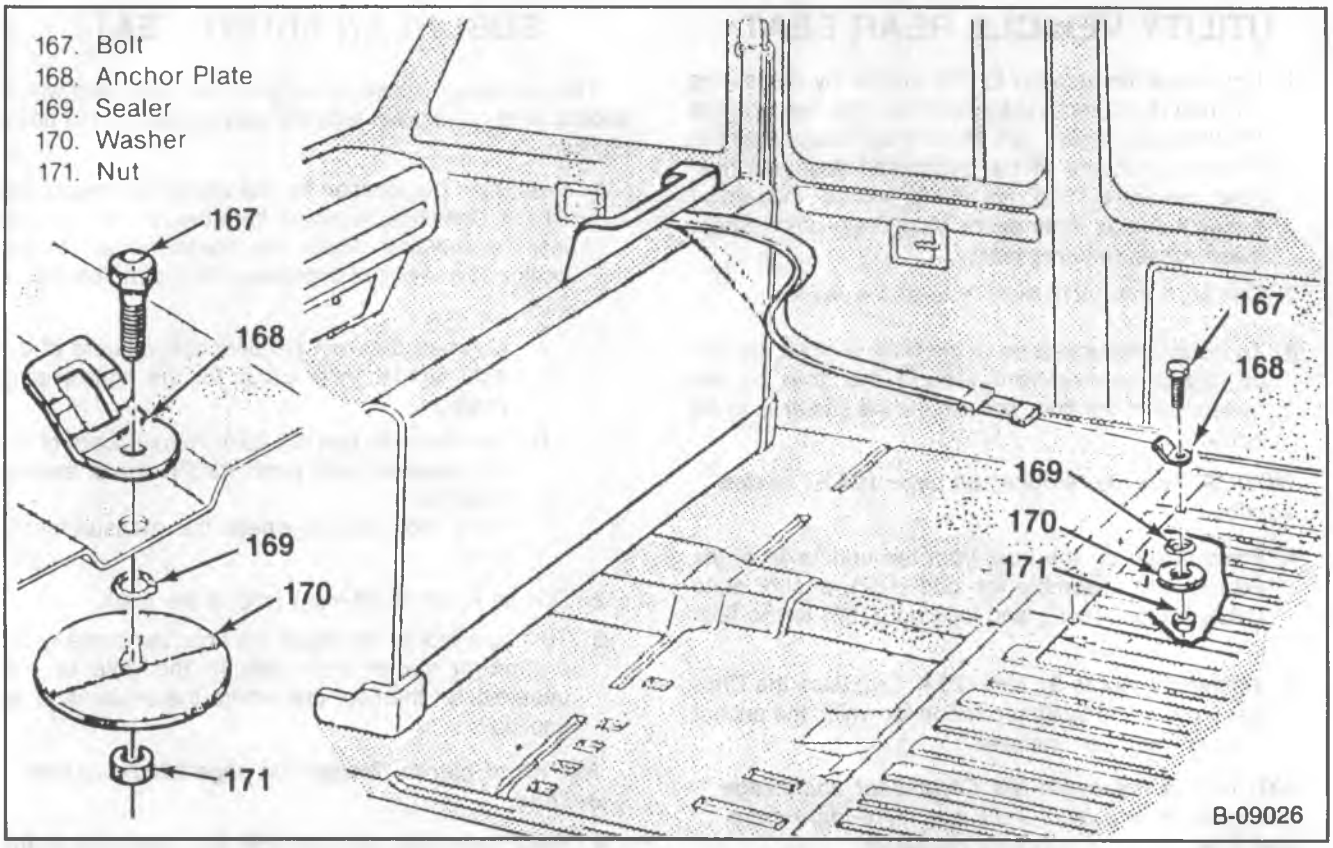

Figure 31—Suburban Front Seat Top Strap Belt Components

5. Tighten the nut to 31 N•m (23 ft. lbs.). Use the Child Seat only in the seating position for which the anchor bracket has been installed.

NOTICE: In the event the child seat anchorage assembly is removed, the 8 mm (5/16-inch) diameter hole must be properly resealed.

SUBURBAN SECOND SEAT

1. Determine the location for the anchor by measuring 650 mm (25 1/2-inches) rearward from the rear edge of the kick-up molding (figure 32). Next:
   A. Measure 55 mm (2.12-inches) inboard of the right wheelhouse for the right seating position.
   B. Measure 590 mm (23.25-inches) inboard of the right wheelhouse for the center seating position.
   C. Measure 55 mm (2.12-inches) inboard of the left wheelhouse for the left seating position.

   Mark the position where the measurements for the desired seating position meet.
2. Drill an 8 mm (5/16-inch) hole at mark.
3. To insure proper sealing of the hole, remove any dirt or foreign matter from around the hole on the underside of the floor pan where the sealer is to be applied.

NOTICE: Refer to "Notice" on page 10A2-1 of this section.

4. Place sealer on the hole from the underside of the vehicle and assemble the bolt (172), anchor plate (173), washer (175), and lock nut (176) to the floor pan.
5. Tighten the nut to 31 N•m (23 ft. lbs.). Use the Child Seat only in the second seat seating position for which the anchor bracket has been installed.

NOTICE: In the event the Child Seat anchorage assembly is removed, the 8 mm (5/16-inch) diameter hole must be properly resealed.

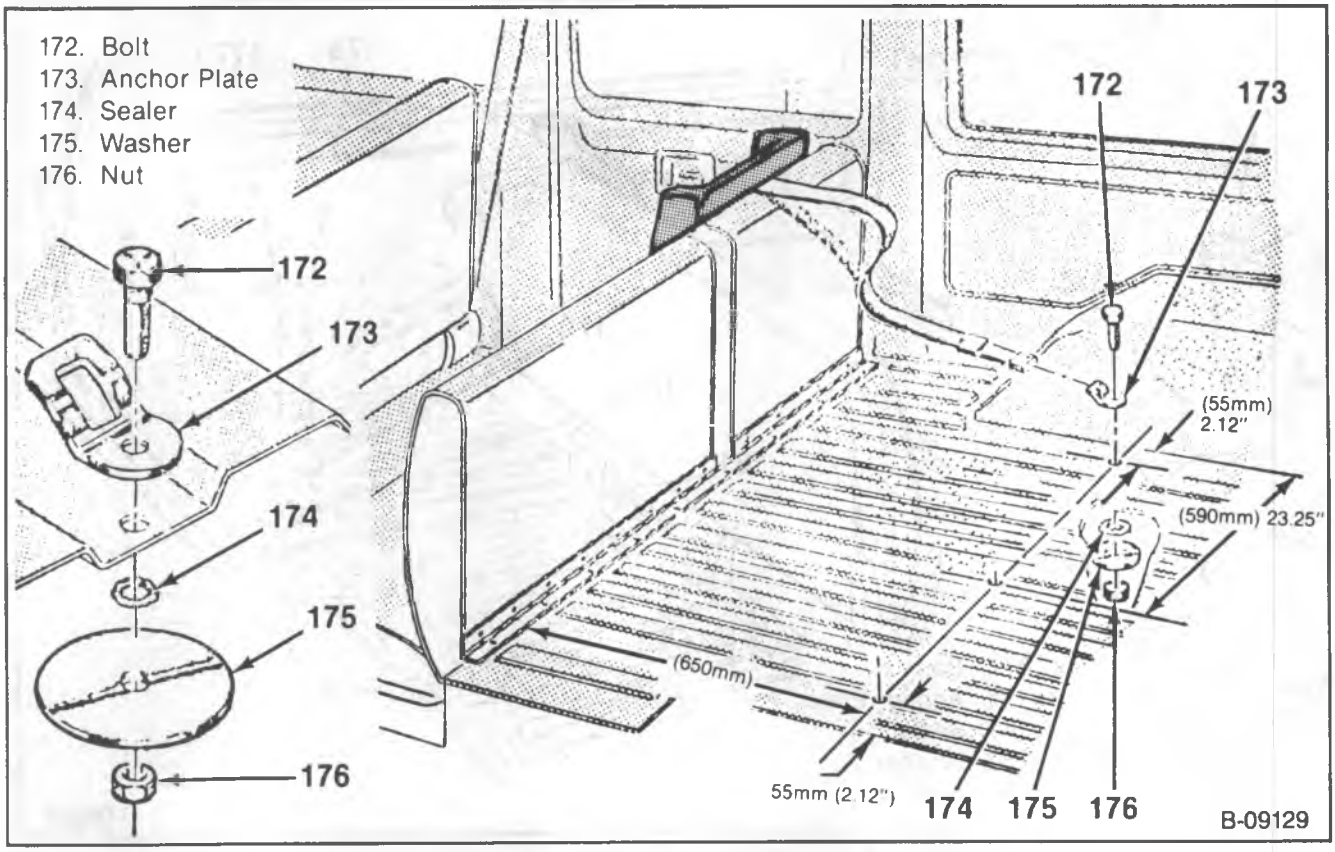

Figure 32—Suburban Second Seat Top Strap Belt Components

SUBURBAN THIRD SEAT

1. Determine the location for the anchor by measuring 127 mm (5-inches) forward from the rear edge of the floor pan. Make this measurement in the center of one of the depressed floor pan ribs (figure 33).

   Next:

   A. Measure 535 mm (21-inches) inboard of the right quarter inner panel for the right seating position.

   B. Measure 805 mm (31.75-inches) inboard of the right quarter inner panel for the center seating position.

   C. Measure 1,160 mm (45.75-inches) inboard of the right quarter inner panel for the left seating position.

2. Drill an 8 mm (5/16-inch) hole at mark.
3. To insure proper sealing of the hole, remove any dirt or foreign matter from around the hole on the underside of the floor pan where the sealer is to be applied.

NOTICE: Refer to "Notice" on page 10A2-1 of this section.

4. Place sealer on the hole from the underside of the vehicle and assemble the bolt (177), anchor plate (178), washer (180), and lock nut (181) to the floor pan.
5. Tighten the nut to 31 N•m (23 ft. lbs.). Use the Child Seat only in the third seat seating position for which the anchor bracket has been installed.

NOTICE: In the event the Child Seat anchorage assembly is removed, the 8 mm (5/16-inch) diameter hole must be properly resealed.

NOTICE: If the hole penetrates to the exterior of the vehicle, apply a sealant between the anchor bolt washer and the sheet metal to prevent carbon monoxide from entering the vehicle. Suitable sealers include silicone, butyl or acrylic type calking.

In the event that the child seat anchorage assembly is removed, all bolt holes penetrating to the exterior of the vehicle must be resealed to prevent exhaust fumes from entering the vehicle.

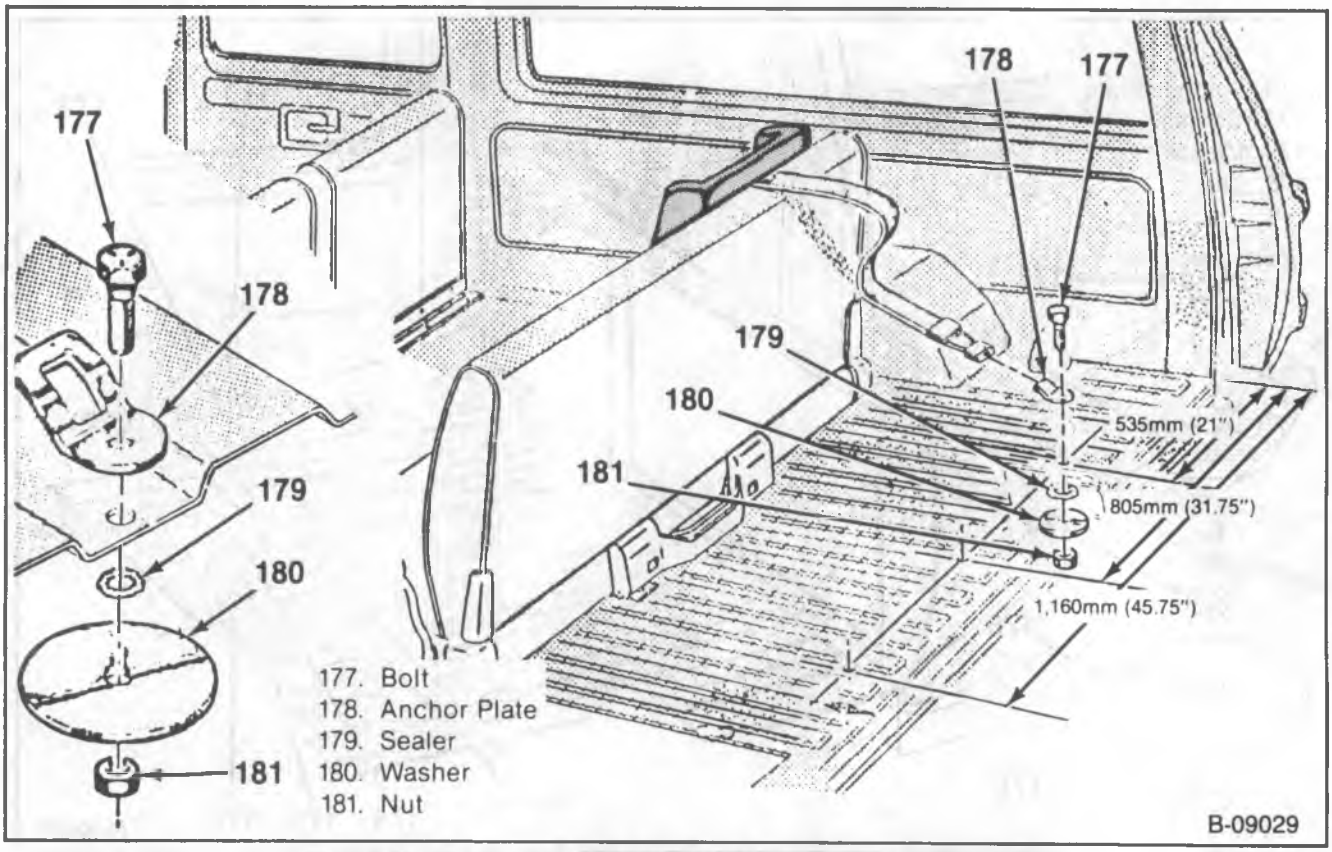

Figure 33—Suburban Third Seat Top Strap Belt Components

SPECIFICATIONS

FASTENER TORQUE

	N·m	Ft. Lbs.
Front Seat Belt Fasteners (Except Top Strap)	50	37
Crew Cab Rear Seat Belt Fasteners	55	40
Utility Vehicle Rear Seat Belt:		
Retractor to Floor Panel Bolts	52	38
Retractor to Roof Panel Bolts	27	20
Buckle to Latch Assembly Bolts	38	28
Suburban Rear Seat Belt:		
Retractor to Body Panel Bolts	67	49
Retractor to Floor Panel Bolts	50	37
Retractor to Roof Panel Bolts	50	37
Buckle to Latch Assembly Bolts	67	49
Top Strap Fasteners	31	23

TB-3068-2A

SECTION 10A3

GLASS

NOTICE: If a glass is cracked but still intact, it should be crisscrossed with masking tape to reduce the risk of damage to the vehicle. If a crack extends to the edge of the glass, mark the cab with a piece of chalk at the point where the crack meets the cab.

CONTENTS

SUBJECT	PAGE
On-Vehicle Service	**10A3-1**
Windshield Replacement	**10A3-1**
Stationary Glass Replacement	**10A3-3**
Glass Polishing	**10A3-6**
Special Tools	**10A3-7**

ON-VEHICLE SERVICE

WINDSHIELD REPLACEMENT

When replacing a cracked windshield, it is important that the cause of the crack be determined and the condition corrected before a new glass is installed. The cause of the crack may be an obstruction or high spot somewhere around the flange of the opening; cracking may not occur until pressure from the high spot or obstruction becomes particularly high due to winds, extremes of temperature, or rough terrain. Suggestions of what to look for are described later in this section under Inspection.

If a crack extends to the edge of the glass, mark the point where the crack meets meets the weatherstrip. (Use a piece of chalk and mark the point on the cab, next to the weatherstrip.) Later, when examining the flange of the opening for a cause of the crack, start at the point marked.

The higher the temperature of the work area, the more pliable the weatherstrip will be. The more pliable the weatherstrip, the more easily the windshield can be removed.

Remove or Disconnect (Figures 1 and 2)

CAUTION: Always wear heavy gloves when handling glass to avoid the risk of injury.

- Place protective coverings around glass removal area.

1. Reveal molding cap.
2. Reveal molding.
   - From inside the cab, apply a firm controlled pressure to the edge of the glass while forcing the weatherstrip from the flange with a flat-blade tool.

NOTICE: Refer to notice on page 10A3-1 of this section.

3. Windshield glass.
   - With the aid of a helper from outside the vehicle, remove windshield from opening.
4. Excess urethane and remaining weatherstrip from the pinchweld flange.

Clean

- Pinchweld with a dry cloth.

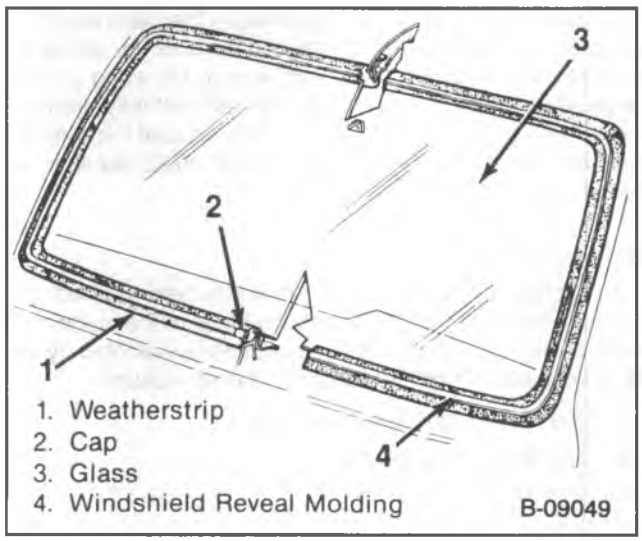

Figure 1—Windshield Components

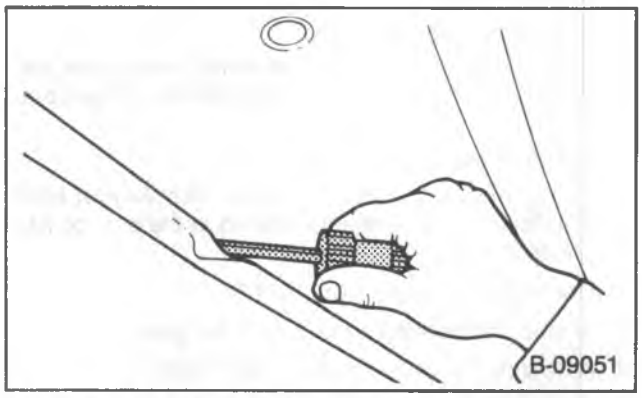

Figure 2—Forcing the Weatherstrip Over the Flange

INSPECTION

An inspection of the flange of the windshield opening, the weatherstrip, and the glass may reveal the cause of a broken windshield. This can help prevent future breakage. If there is no apparent cause of breakage, the weatherstrip should be removed from the flange of the opening and the flange inspected. Look for high weld or solder spots, hardened spot weld sealer, or any other obstruction or irregularity in the flange. Check the weatherstrip for irregularities or obstructions.

Check a windshield that is to be installed to make sure it does not have any chipped edges. Chipped edges can be ground off, restoring a smooth edge to the glass, and minimizing concentrations of pressure that cause breakage. Remove no more than necessary, in an effort to maintain the original shape of the glass and the proper clearance between it and the flange of the opening. See Glass-To-Opening Clearance Check later in this section.

GLASS-TO-OPENING CLEARANCE CHECK

Before installing a windshield, the clearance between the edge of the glass and the flange of the opening should be checked. The glass and flange overlap by 5 mm (0.2-inch). If the windshield is too big, rework the metal flange or grind off the edge of the glass. If the glass is to be ground off, place a strip of tape on the glass and use the edge of the tape as a guide.

If there is too much clearance between the glass and the flange of the opening, the flange can be built up. Braze a piece of 3 mm (1/8-inch) diameter wire to the edge of the flange. Usually, building up one side and half way around one corner will be enough. Taper off the ends of the wire to avoid an abrupt change in contour which could result, in a broken windshield.

SERVICE KIT

To replace a urethane adhered windshield, GM adhesive service kit No. 9636067 contains some of the materials needed, and must be used to ensure the original integrity of the windshield design. Materials in the kit include:

1. One tube of adhesive material.
2. One dispensing nozzle.
3. Steel music wire.
4. Rubber cleaner.
5. Rubber primer.
6. Pinchweld primer.
7. Blackout primer.
8. Filler strip (for use on windshield installations for vehicles equipped with embedded windshield antenna).
9. Primer applicators.

Other materials are required for windshield installation which are not included in the service kit. These include:

1. GM Rubber lubricant No. 1051717.
2. Alcohol for cleaning the edge of the glass.
3. Adhesive dispensing gun J 24811-A or
4. A standard household cartridge type gun reworked as follows:
   a. Widen the end slot to fit the diameter of the dispensing nozzle of the adhesive tube.
   b. Reduce the diameter of the plunger disc so that the disc will enter the large end of the adhesive tube.
5. Commercial type razor knife (for cutting along the edge of the glass).
6. Weatherstrip Tool J 2189-02.

Windshield installation requires a number of timed steps because of the cure times involved with the primers, solvents, and adhesives used in this procedure. This timing is important and must be followed.

Install or Connect (Figures 3 and 4)

Tools Required:

J 24811-A Adhesive Dispensing Gun

J 2189-02 Weatherstrip Tool

1. Pinchweld primer.
   - Primer must be thoroughly stirred and agitated.
   - Allow to cure for 30 minutes.
2. Rubber cleaner to both channels of rubber weatherstrip.
   - Wait 5 minutes before wiping the channels with a clean dry cloth.
3. Rubber primer to both channels of the weatherstrip.
   - Wait 30 minutes for curing.

Clean

   - Inner surface of glass with a clean alcohol dampened cloth. Allow the glass to air dry.
4. Blackout primer to the inside face of the glass.
   - Start 10 mm (.40-inch) from the edge and work the primer outward to the edge.
   - Allow the primer to dry.
5. Urethane adhesive bead with a diameter of 6 mm (.25-inch) to the center of the pinchweld flange around the entire windshield opening using J 24811-A.
   - Glass must be installed within 20 minutes of performing this step.
   - Spray a mist of water to the urethane bead, wetting it fully.
6. Rubber weatherstrip to the pinchweld flange.
7. Urethane adhesive bead with a 4.5 mm (.18-inch) diameter to the rubber weatherstrip glass channel using J 24811-A (figure 3).
8. Glass to the window opening.
9. Rubber lubricant to the lockstrip channel.
   - Glass must be seated before the lubricant is applied.
10. Reveal molding to the weatherstrip using J 2189-02 (figure 4).
11. Reveal molding cap at the joint.

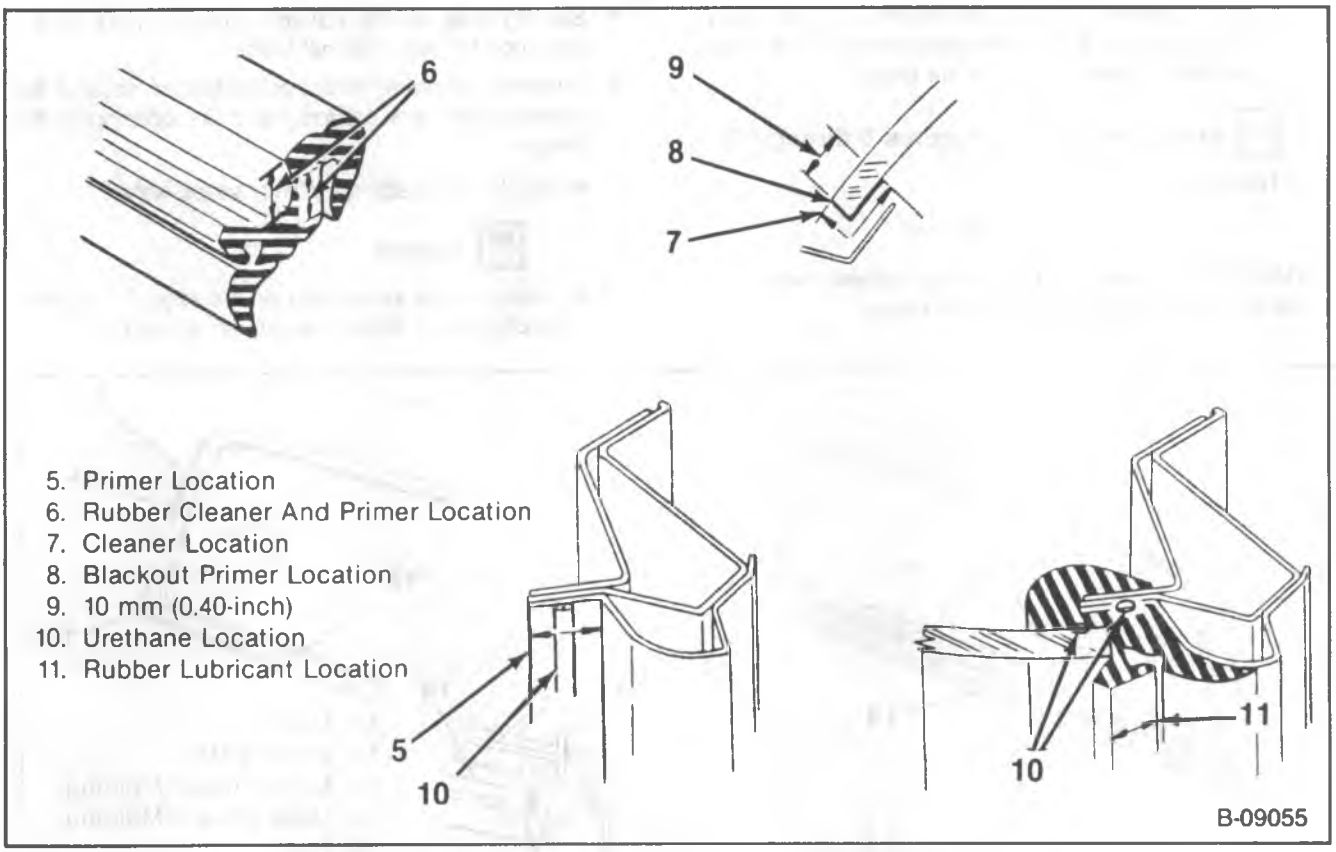

Figure 3—Primer and Adhesive Application Locations

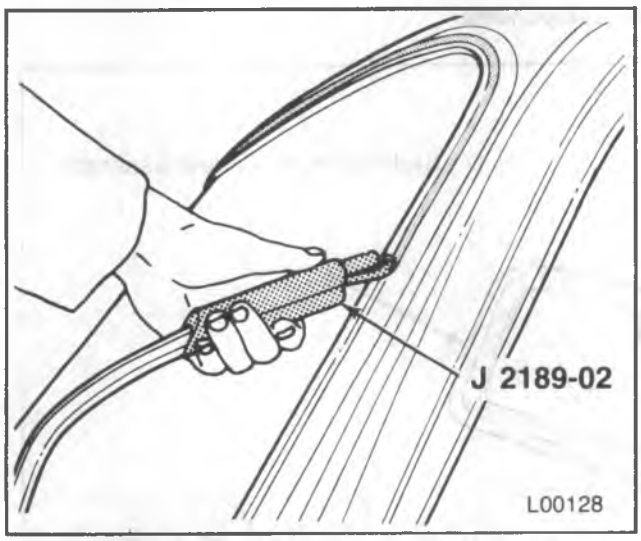

Figure 4—Installing the Reveal Molding

STATIONARY GLASS REPLACEMENT

Remove or Disconnect (Figures 5 through 9)

CAUTION: Always wear heavy gloves when handling glass to avoid the risk of injury.

1. Reveal molding.
   - Push the clip to one side to free the ends.

NOTICE: Refer to Notice on page 10A3-1 of this section.

2. Window glass.
   - Insert a putty knife between the glass and the weatherstrip and run the knife around the entire edge of the window.

NOTICE: Refer to Notice on page 10A3-1 of this section.

- With a helper standing outside the vehicle, push the glass from the weatherstrip from inside the cab while the helper removes the glass.

Install or Connect (Figures 5 through 9)

Tool Required:

J 2189-02 Weatherstrip Tool

CAUTION: Always wear heavy gloves when handling glass to avoid risk of injury.

1. Sealing tape on the outside upper corners of the opening, 4.2 mm (1/6-inch) wide.
2. Weatherstrip at the center of the bottom edge of the opening and work around the entire opening of the flange.
   - Brush the weatherstrip with soapy water.

Inspect

- Glass for cracks or chips on the edge. If the glass is chipped, it should be ground smooth.

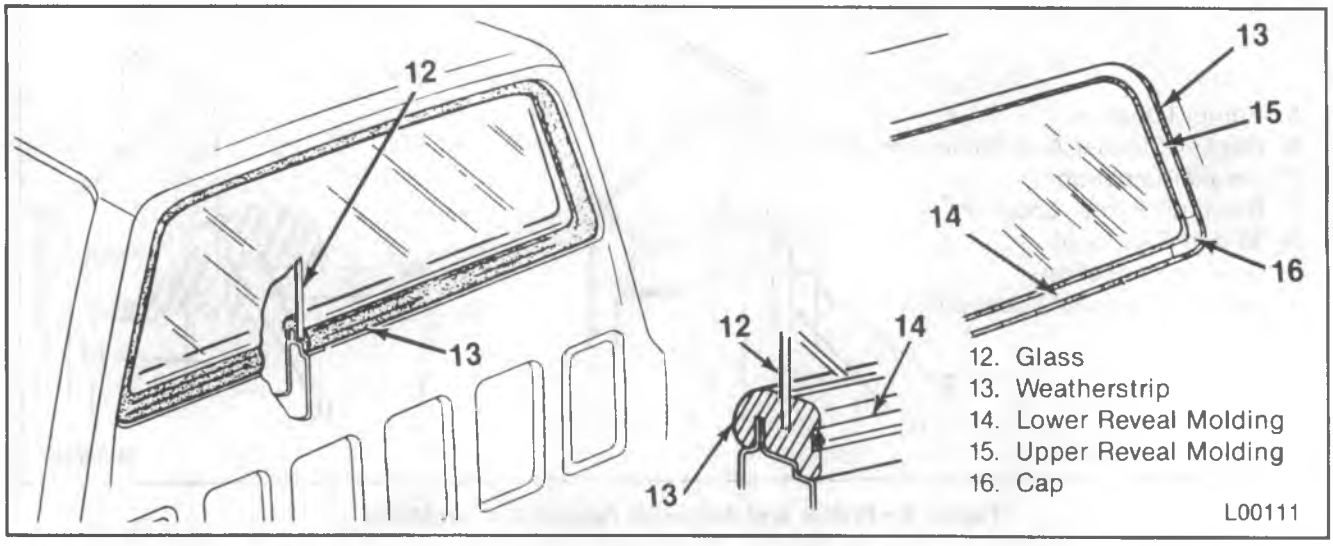

Figure 5—Back Window Components

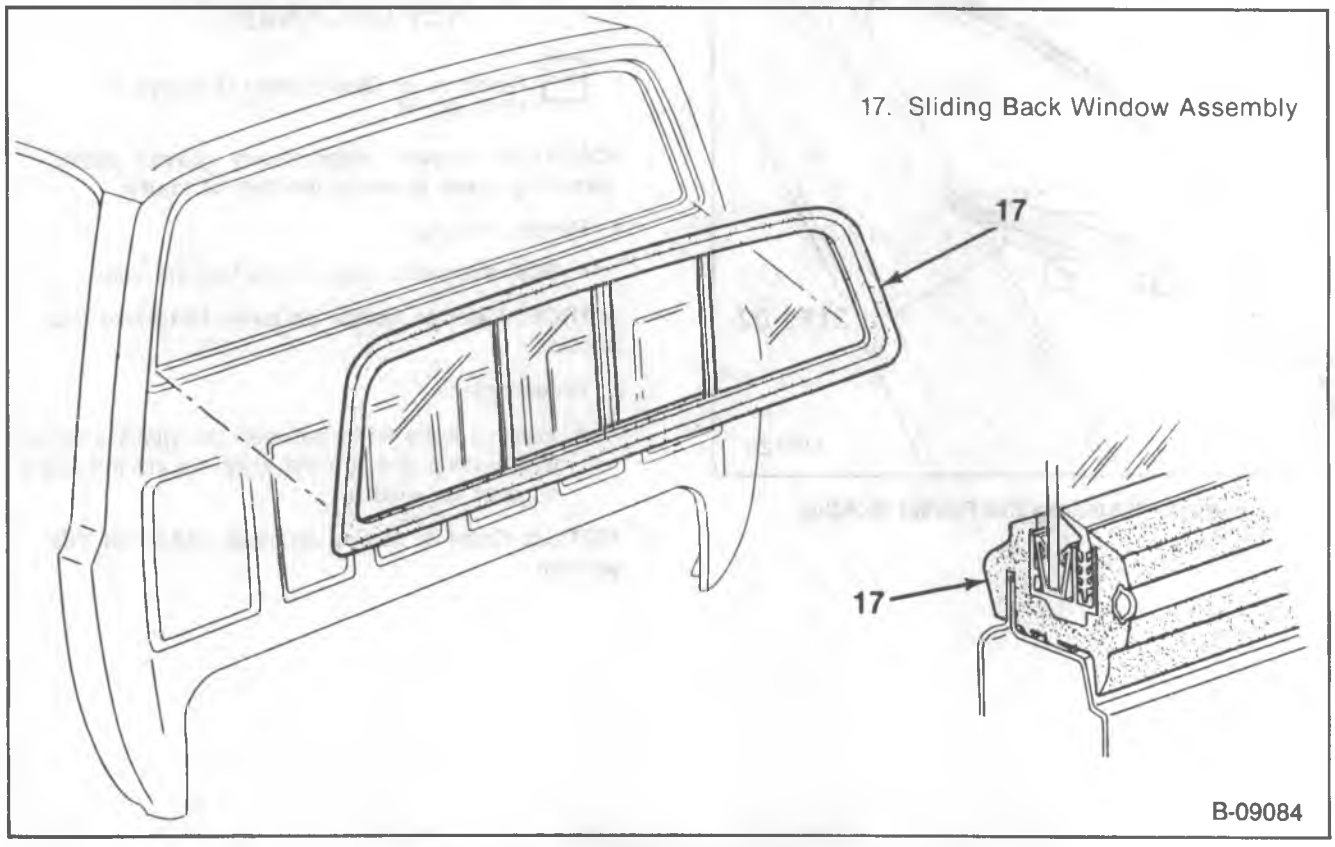

Figure 6—Sliding Back Window Components

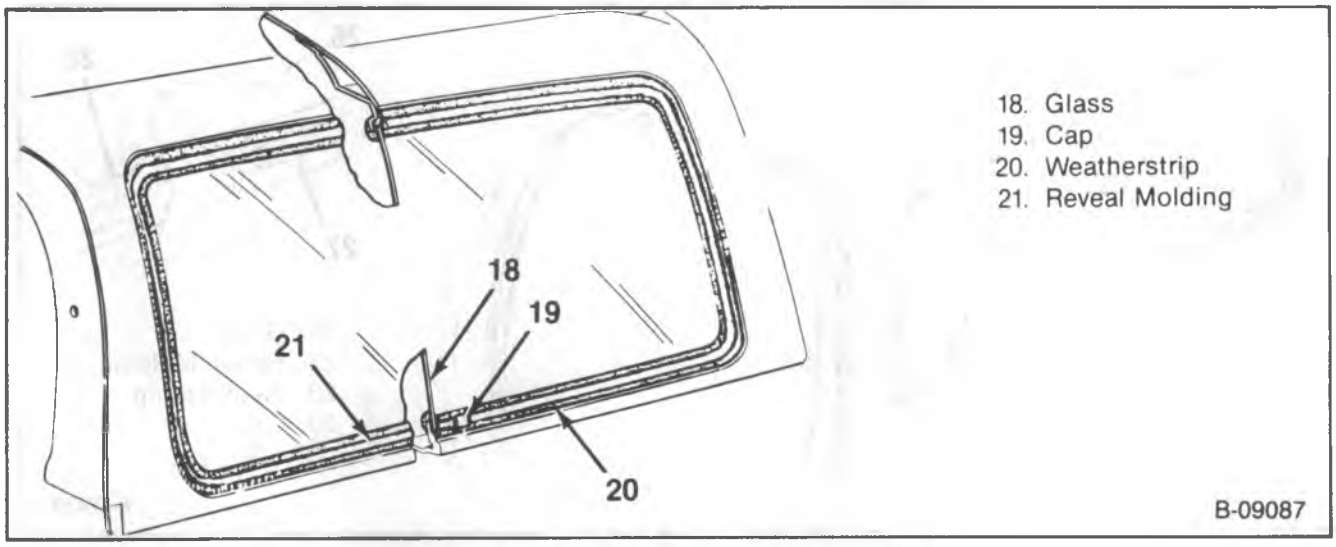

Figure 7—Body Side Window Components

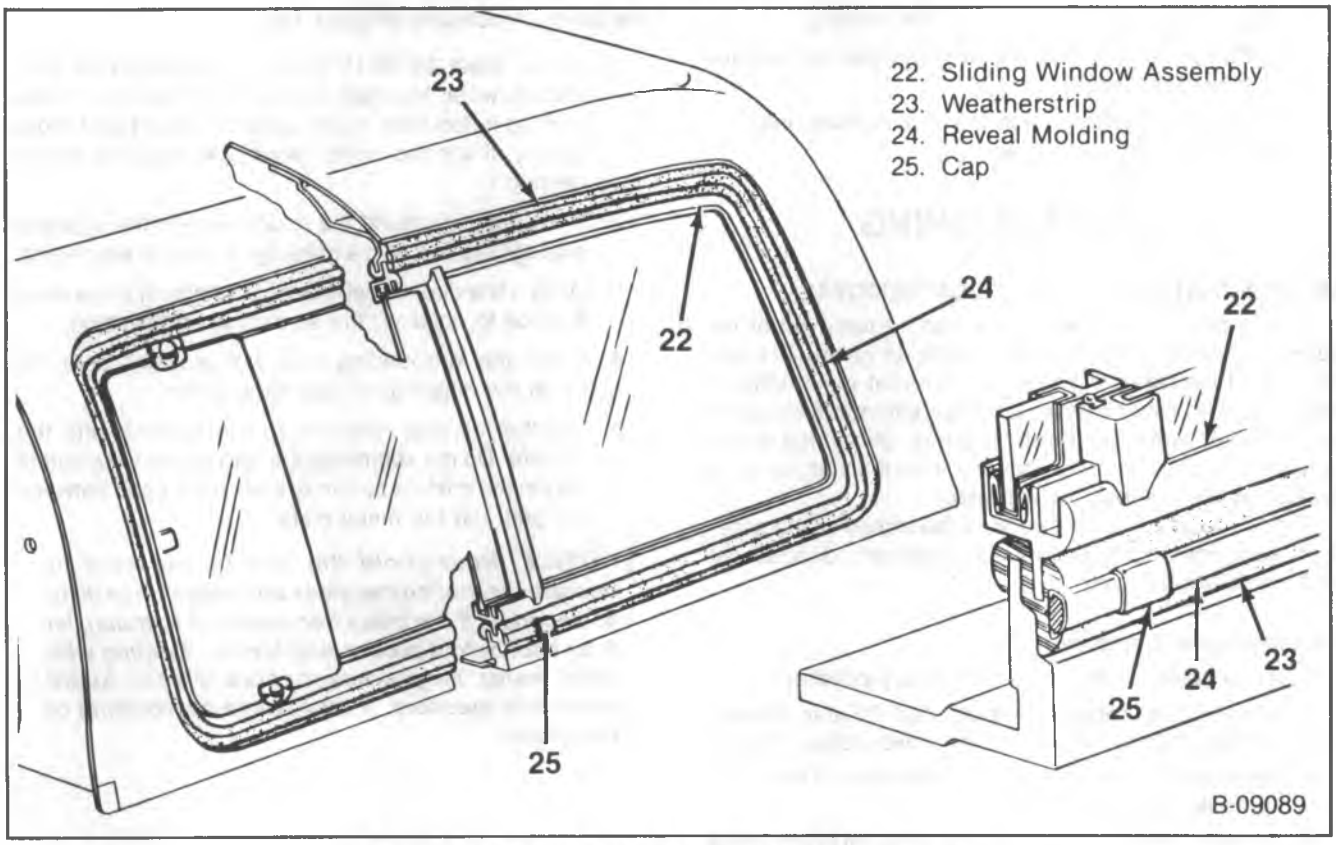

Figure 8—Sliding Body Side Window Components

3. Glass in place on the weatherstrip.
   - Insert the hook end of tool J 2189-02 between the weatherstrip and the edge of the glass.
   - Pull the tool around the glass to slip the edge of the glass into the groove of the weatherstrip.
4. Reveal molding.
   - Thread the end of the molding through the handle of J 2189-02.
   - Push the end of the molding into the groove of the weatherstrip at the center of the bottom edge (figure 4).
   - Move the tool around the window while feeding the molding. Use a hitching motion to avoid stretching the molding.
   - Cut any excess molding leaving the ends to overlap by 25 mm (1-inch).

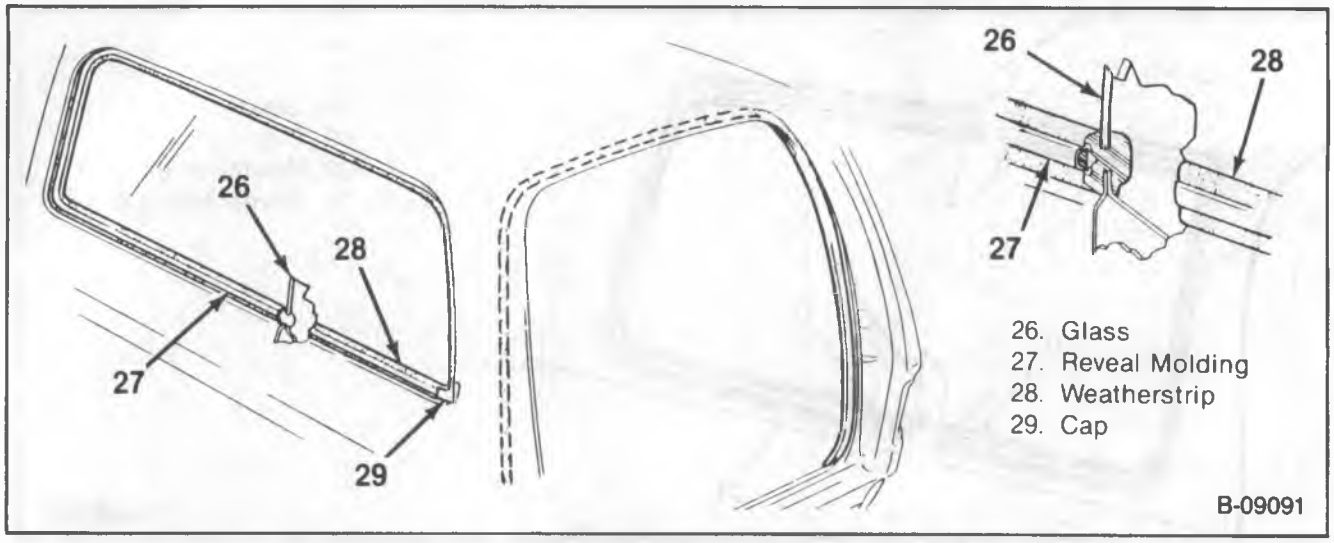

Figure 9—Suburban Rear Stationary Window Components

5. Retaining clip over one end of the molding.
   - Buff the ends of the molding together and secure them with the clip.
6. Ends of the molding, with the clip in place, into the groove of the weatherstrip.

GLASS POLISHING

MINOR SCRATCH AND ABRASION REMOVAL

Minor scratches and abrasions can be removed or reduced by following the procedure outlined below. Precautions must be taken, however, to prevent distortions of vision; double vision may result if an attempt is made to remove deep scratches. Deep scratches should not be removed from an area in the driver's line of vision; in such cases, the glass should be replaced.

The procedure that follows was developed using a cerium oxide compound. Follow manufacturer's directions if other materials are used.

Recommended Equipment

1. A low speed (600-1300 RPM) rotary polisher.
2. A wool, felt, rotary polishing pad 76 mm (three-inches) in diameter and 51 mm (two-inches) thick.
3. Powdered cerium oxide mixed with water. This is the abrasive compound.
4. A wide mouth container to hold the abrasive compound.

Polishing Procedure (Figure 10)

1. Mix at least 44 ml (1.5 oz.) of cerium oxide with enough water to obtain a creamy consistency. (If the mixture is too thick it will cake on the felt pad more quickly. If it is too runny, more polishing time will be needed.)
2. Draw a circle around the scratch(es) on the opposite side of the glass with a marking crayon, or equivalent.
3. Draw a line directly behind the scratch(es) to serve as a guide for locating the scratch while polishing.
4. Cover the surrounding area with masking paper to catch the drippings or spattered polish.
5. Dip the felt pad attached to the polisher into the mixture. Do not submerge the pad or allow the pad to stay in the mixture as it may loosen the bond between the pad and the metal plate.

NOTICE: Never hold the tool in one spot or operate the tool on the glass any longer than 30 to 45 seconds. If the glass becomes hot to touch, let it air cool before proceeding further. Cooling with cold water may crack heated glass. Avoid excessive pressure. It may cause overheating of the glass.

6. Polish the scratched area, but note the following:
   a. Agitate the mixture as often as needed to maintain the creamy consistency of the compound.
   b. Use moderate but steady pressure.
   c. Hold the pad flat against the glass.
   d. Use a feathering-out motion.
   e. Dip the pad into the mixture every 15 seconds to ensure that the wheel and the glass are always wet during the polishing operation. (A dry pad causes excessive heat to develop.)
   f. Keep the pad free of dirt and other foreign substances.
7. After removing the scratch, wipe the area clean of any polish.

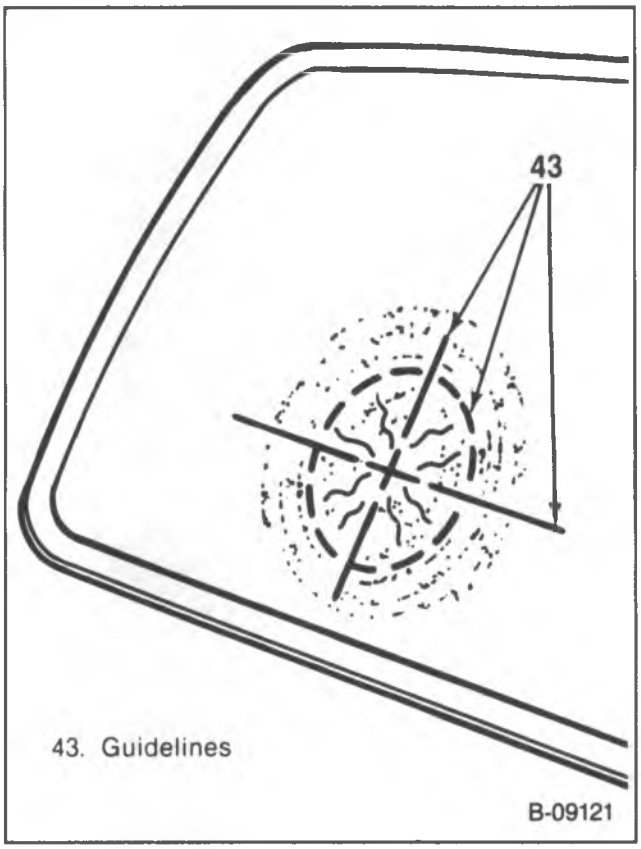

Figure 10—Glass Polishing Guidelines

SPECIAL TOOLS

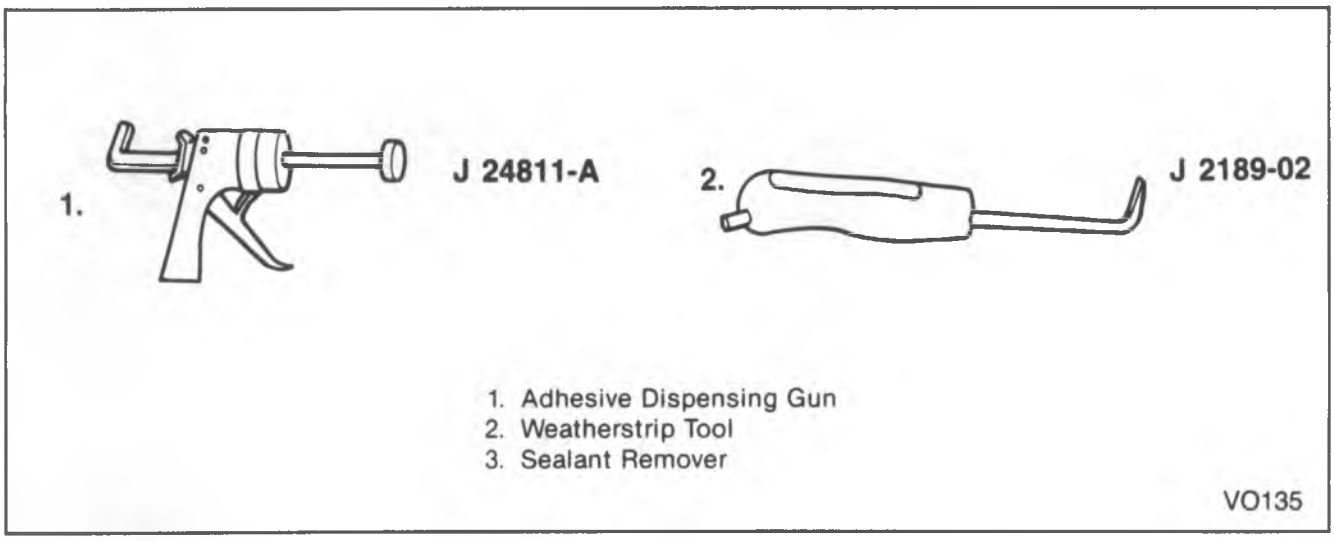

Figure 11—Special Tools

SECTION 10A4

INTERIOR TRIM

CONTENTS

SUBJECT	PAGE
General On-Vehicle Service	10A4- 1
Front Trim Replacement	10A4- 1
Bonus Cab Models On-Vehicle Service	10A4- 2
Carpet Replacement	10A4- 2
Headliner and Trim Replacement	10A4- 4
Utility Vehicle Models On-Vehicle Service	10A4- 7
Carpet Replacement	10A4- 7
Headliner and Trim Replacement	10A4- 9
Front Floor Compartment Replacement	10A4-10
Floor Compartment Door Lock Replacement	10A4-10
Suburban Models On-Vehicle Service	10A4-11
Carpet Replacement	10A4-11
Headliner and Trim Replacement	10A4-12
Roof Rear Header Trim Panel Replacement	10A4-15

GENERAL ON-VEHICLE SERVICE

The following procedure covers the trim located at the front of the cab, and applies to all R/V models.

FRONT TRIM REPLACEMENT

Remove or Disconnect (Figures 1 through 4)

1. Sill plate screws (1).
2. Sill plate (2).
3. Kick panel screws (3).
4. Kick panel (4).
5. Instrument panel outer filler screw (5).
6. Instrument panel outer filler (6).
7. Upper garnish molding screws (7).
8. Upper garnish molding (8).
9. Windshield side garnish molding screws (9).
10. Windshield side garnish molding (10).

Install or Connect (Figures 1 through 4)

1. Windshield side garnish molding (10).
2. Windshield side garnish molding screws (9).
3. Upper garnish molding (8).
4. Upper garnish molding screws (7).
5. Instrument panel outer filler (6).
6. Instrument panel outer filler screw (5).
7. Kick panel (4).
8. Kick panel screws (3).
9. Sill plate (2).
10. Sill plate screws (1).

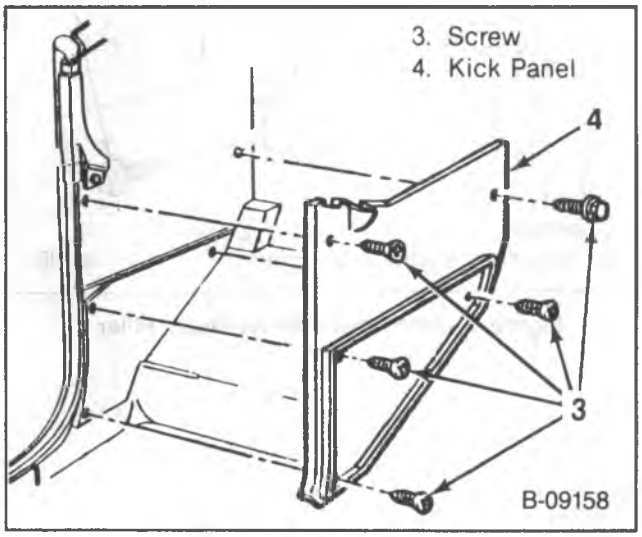

Figure 1—Kick Panel

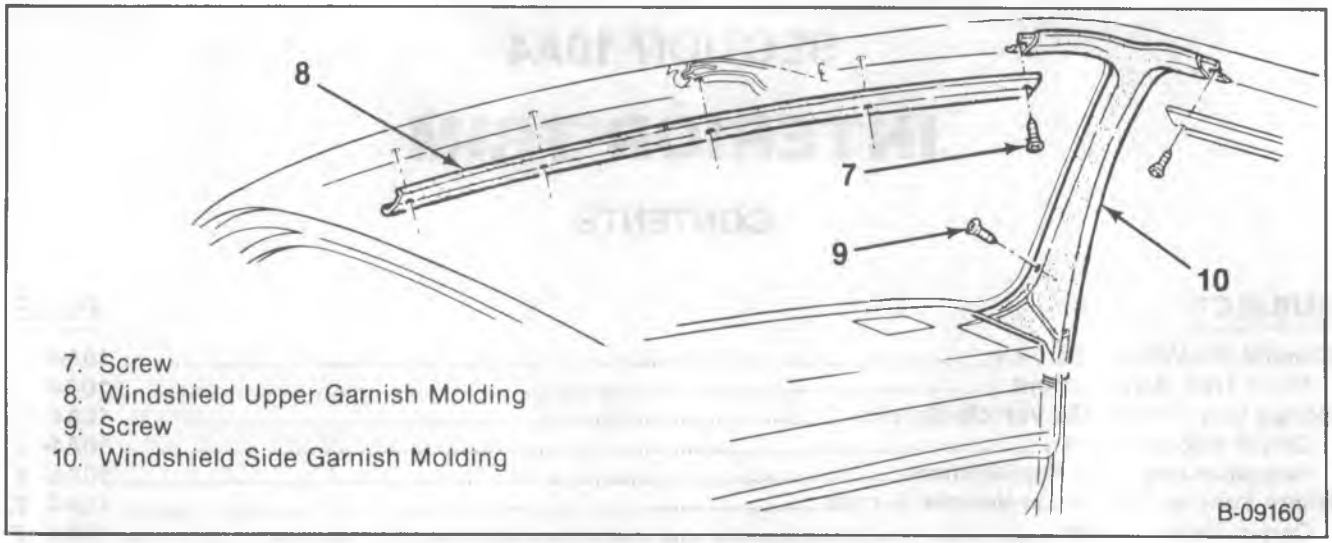

Figure 2—Windshield Garnish Moldings

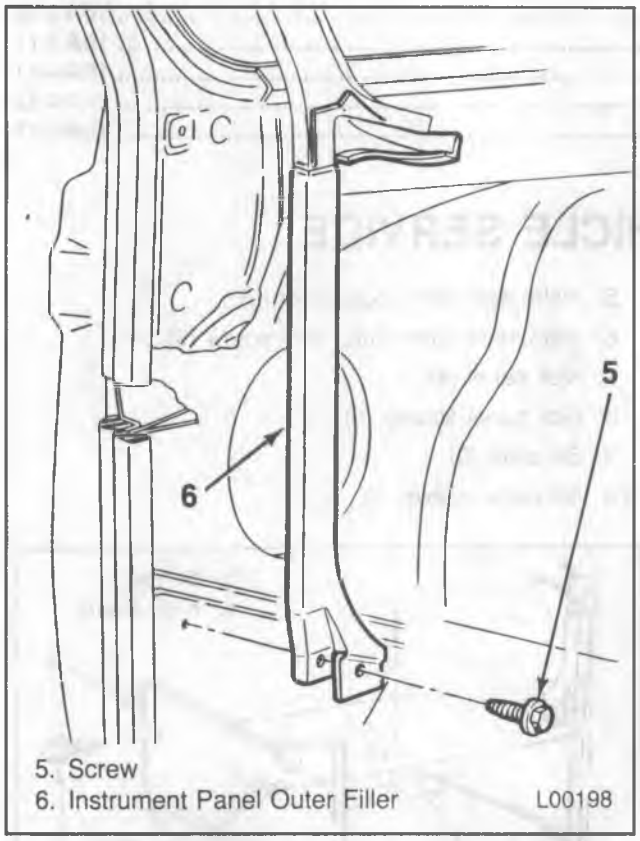

Figure 3—Instrument Panel Outer Filler

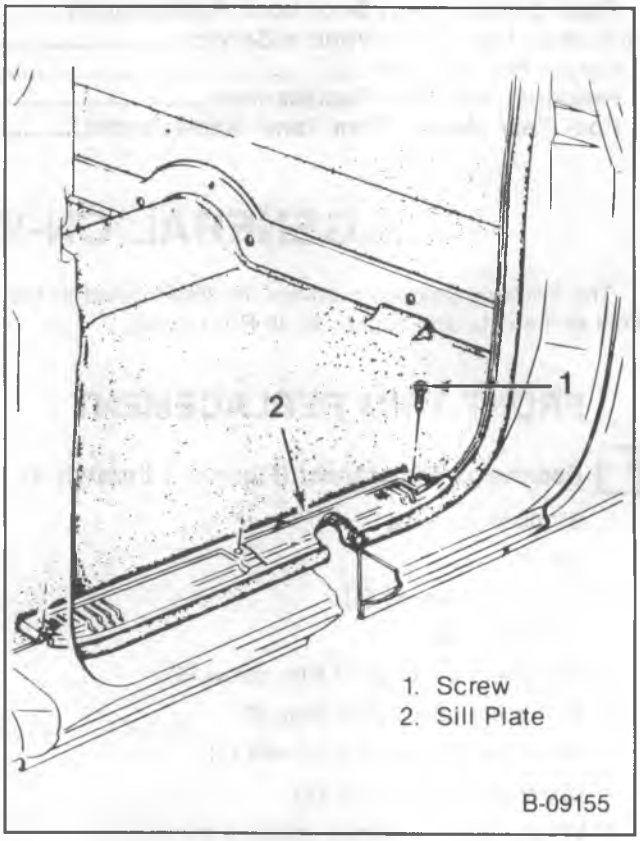

Figure 4—Sill Plate

BONUS CAB MODELS ON-VEHICLE SERVICE

CARPET REPLACEMENT

Remove or Disconnect (Figures 5 through 8)

1. Seats and seat belts. Refer to SEATS (SEC. 10A2).
2. Kick panel.
3. Front door scuff plate screws (26) and the scuff plates (27).
4. Rear door scuff plate screws (159) and scuff plates (160).
5. Rear panel screws.
   - Pull the screws from the panel.
6. Rear panel.
7. Dash panel retainers.
8. Lock pillar garnish molding screws (41) and the molding (42).
9. Carpet to floor panel bolts (28) (if equipped).
10. Carpet (29) from the vehicle.

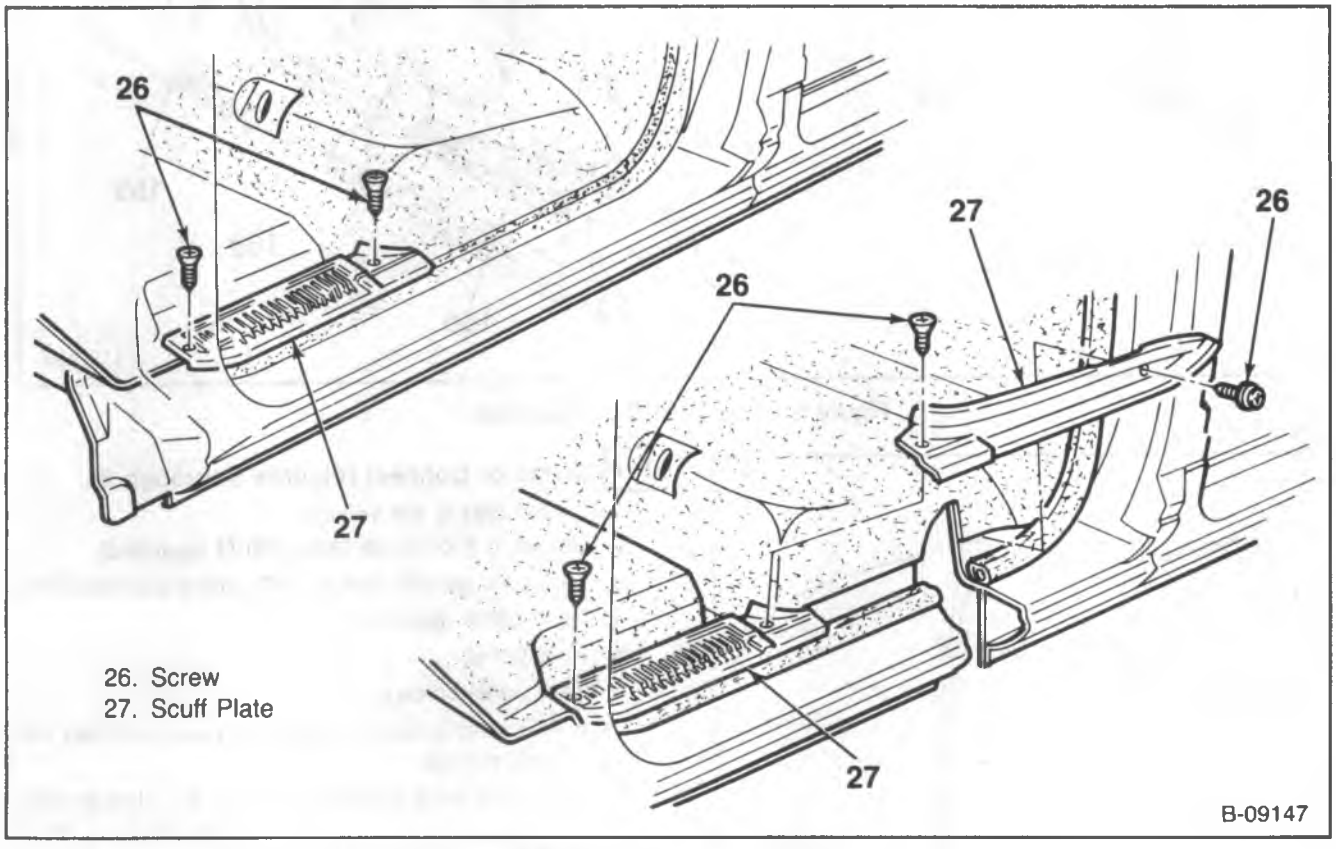

Figure 5—Front Door Sill Plate

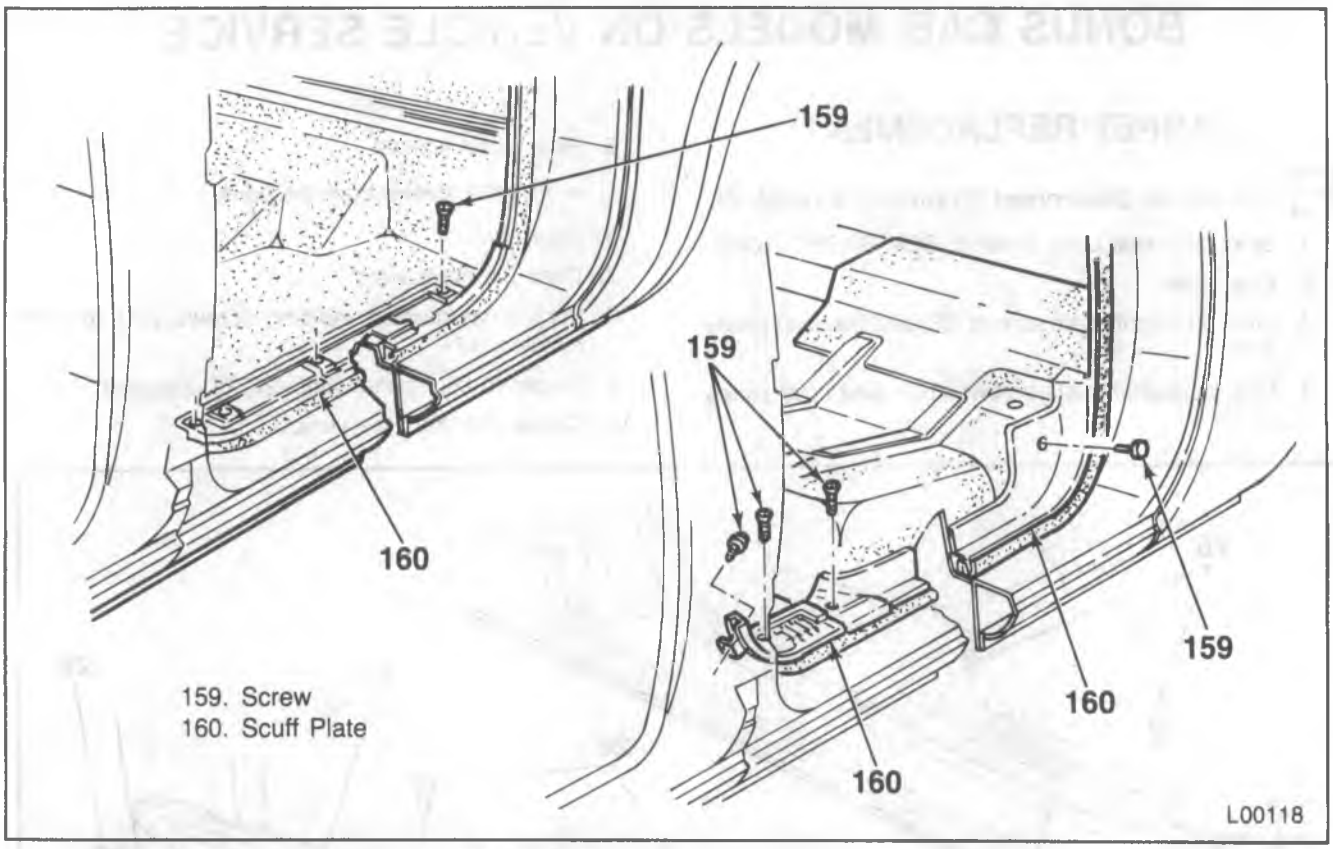

Figure 6—Rear Side Door Sill Plate

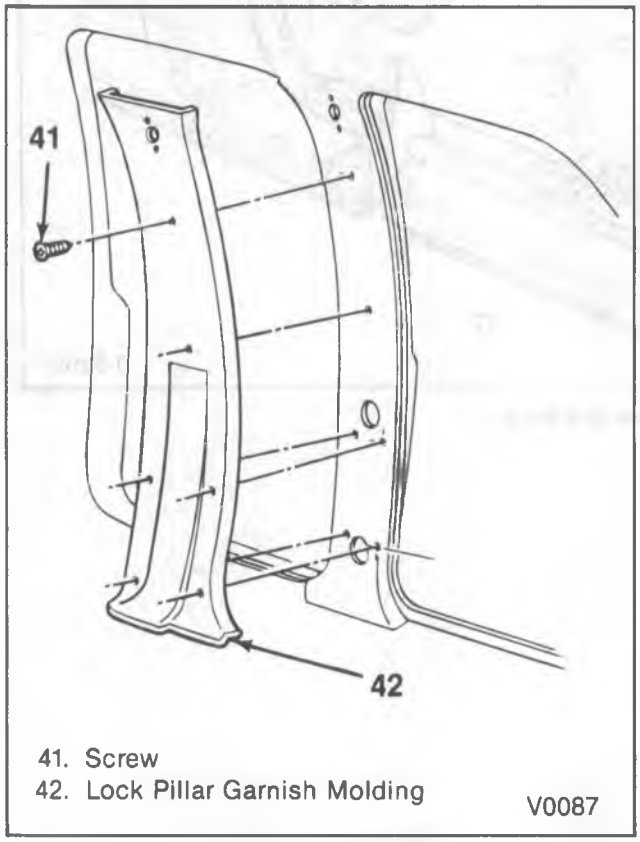

Figure 7—Lock Pillar Garnish Molding

Install or Connect (Figures 5 through 8)

1. Carpet (29) to the vehicle.
2. Carpet to floor panel bolts (28) (if equipped).
3. Lock pillar garnish molding (42) and the screws (41).
4. Dash panel retainers.
5. Rear panel.
6. Rear panel screws.
   - Push the screws through the panel and into the body panels.
7. Front door scuff plates (27) and scuff plate screws (26).
8. Rear door scuff plate (160) and screws (159).
9. Kick panel.
10. Seats and seat belts. Refer to SEATS (SEC. 10A2).

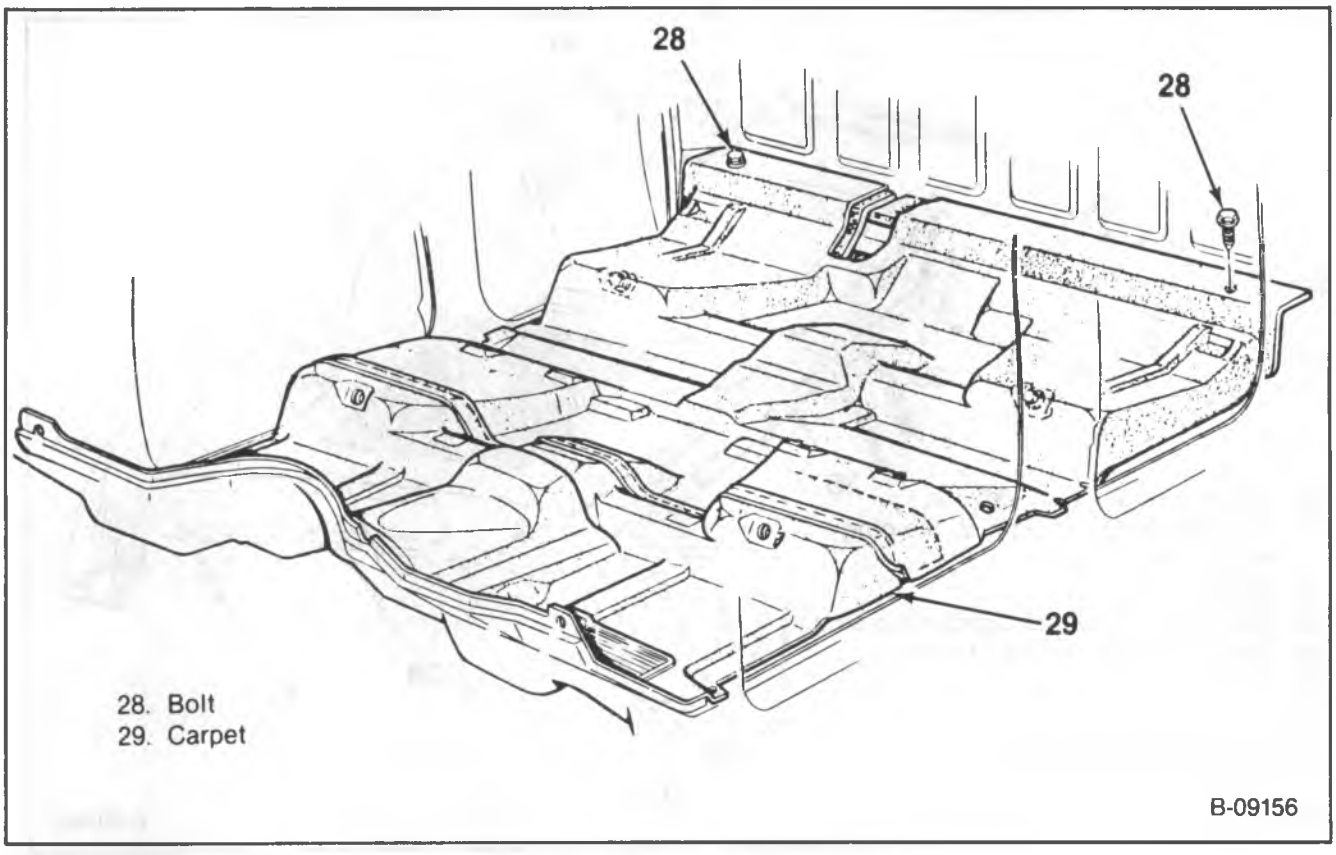

Figure 8—Carpet

HEADLINER AND TRIM REPLACEMENT

Remove or Disconnect (Figures 9 and 10)

1. Windshield upper garnish molding screws (39) and the molding (31).
2. Side window garnish molding screws (40) and the molding (38).
3. Windshield garnish molding screws and the molding (30).
4. Back window garnish molding screws and the molding (35).
5. Lock pillar garnish molding screws and the molding.
6. Sunshade screws (44) and sunshade (43).
7. Headliner (32) from the vehicle.

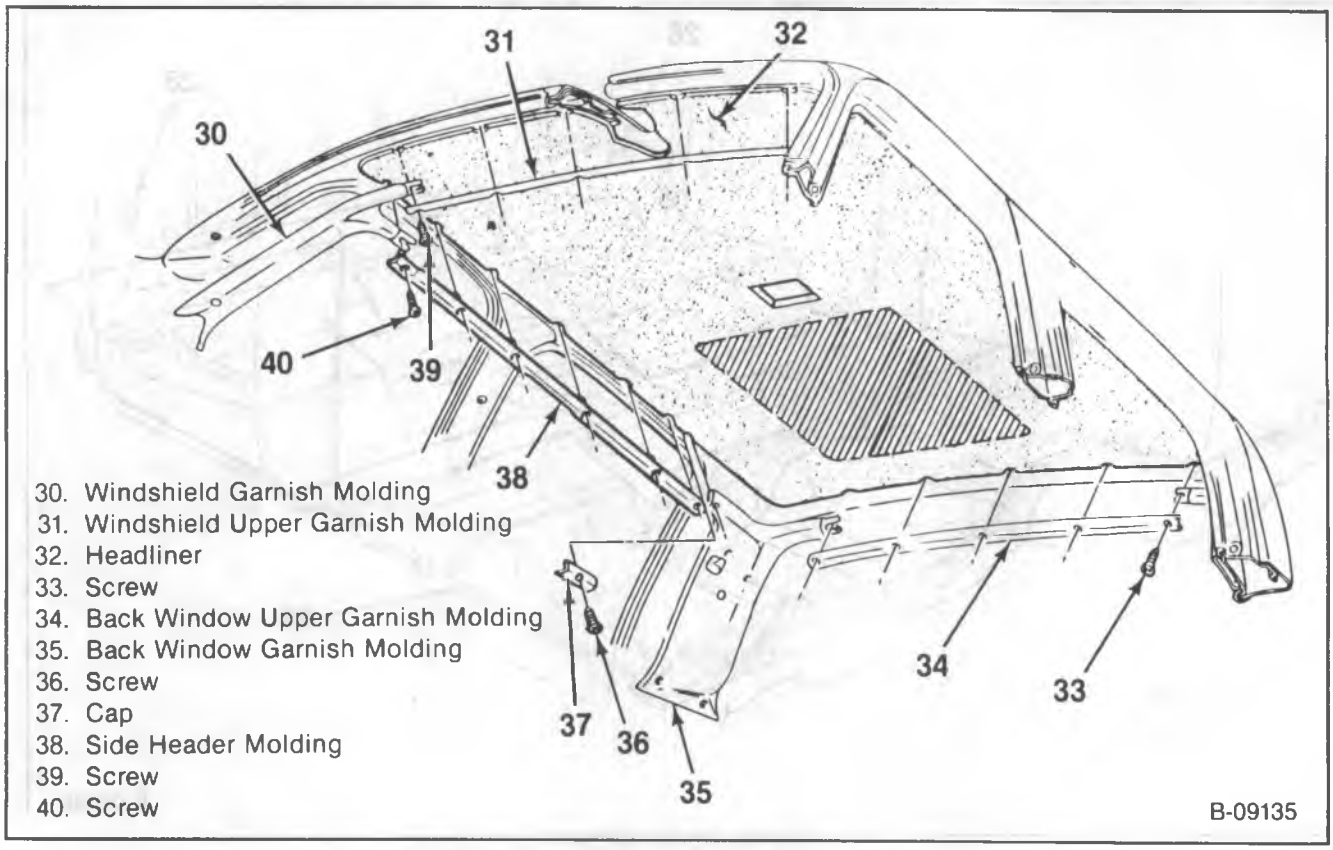

Figure 9—Headliner and Interior Trim

Install or Connect (Figures 9 and 10)

1. Headliner (32) to vehicle.
2. Sunshade (43) and screws (44).
3. Lock pillar garnish molding and screws.
4. Back window garnish molding (35) and screws.
5. Windshield garnish molding (30) and screws.
6. Side window garnish molding (38) and screws (40).
7. Windshield upper garnish molding (31) and screws (39).

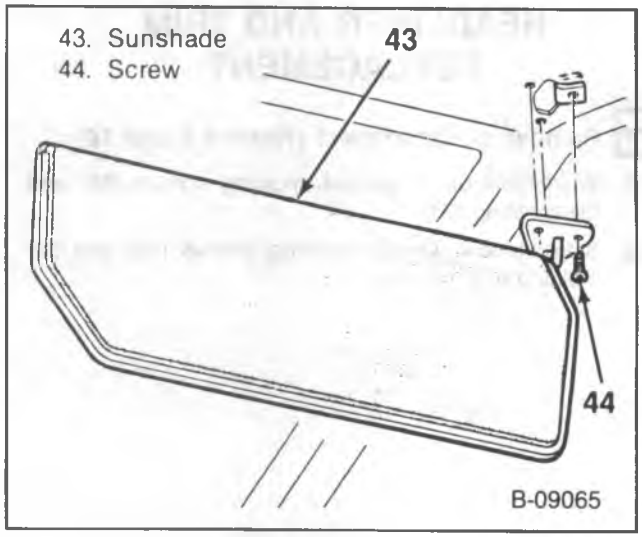

Figure 10—Sunshade

UTILITY VEHICLE MODELS ON-VEHICLE SERVICE

CARPET REPLACEMENT

Remove or Disconnect (Figures 11 through 15)

1. Seats and seat belts. Refer to SEATS (SEC. 10A2).
2. Kick panel.
3. Front door scuff plate.
4. Side trim carpet panel screws (45) and the panel (46).
5. Side trim panel screws (47) and the panel (48).
6. Floor panel trim plate screws (49) and the trim plate (50).
7. Rear scuff plate screws (51) and the plate (52).
8. Dash panel retainers.
9. Carpet (161) from the vehicle.

Install or Connect (Figures 11 through 15)

1. Carpet (161) to vehicle.
2. Dash panel retainers.
3. Rear scuff plate (52) and screws (51).
4. Floor panel trim plate (50) and screws (49).
5. Side trim panel (48) and screws (47).
6. Side trim carpet panel (46) and screws (45).
7. Front door scuff plate.
8. Kick panel.
9. Seats and seat belts. Refer to SEATS (SEC. 10A2).

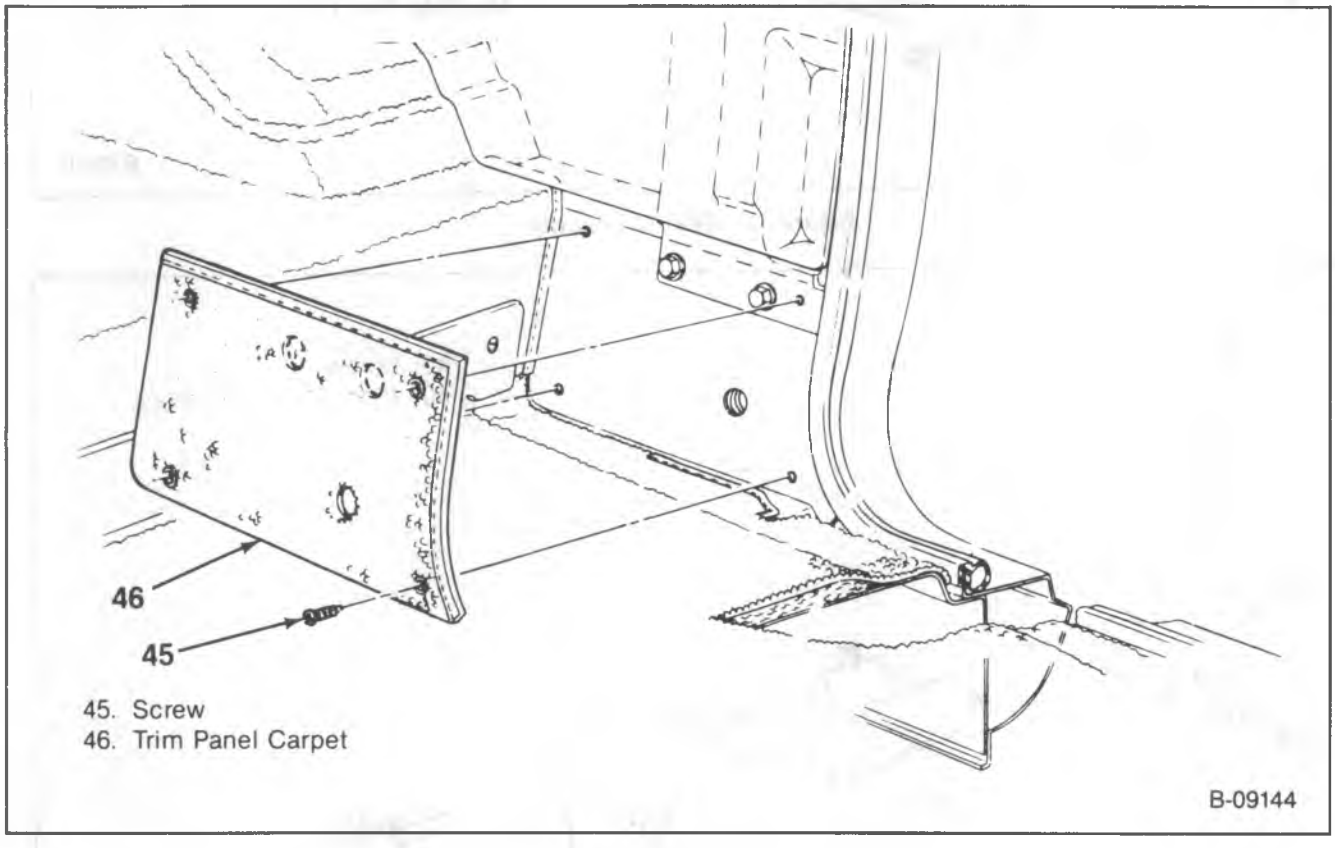

Figure 11—Side Panel Trim Carpet

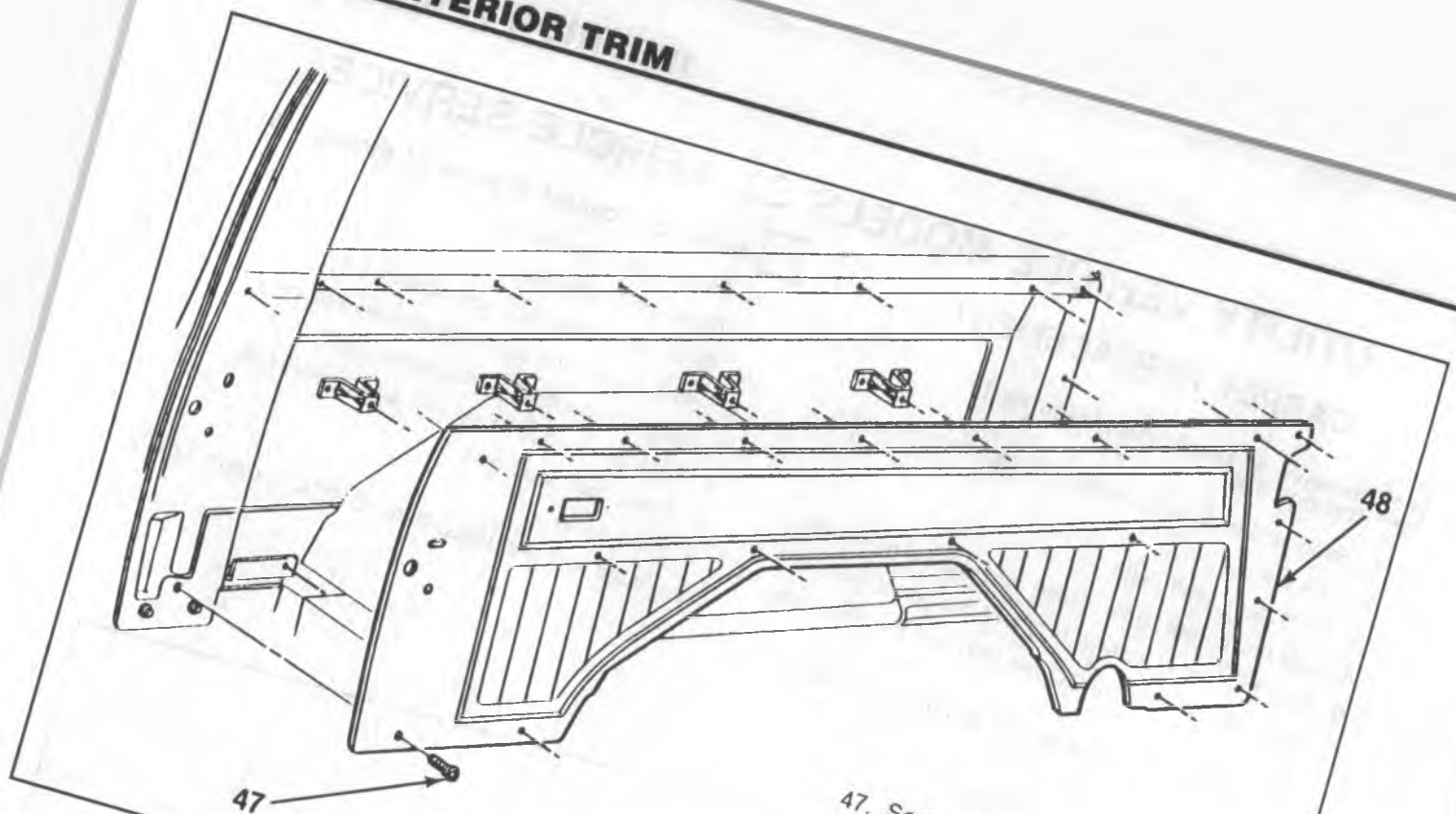

47. Screw
48. Side Trim Panel

Figure 12—Side Trim Panel

B-09111

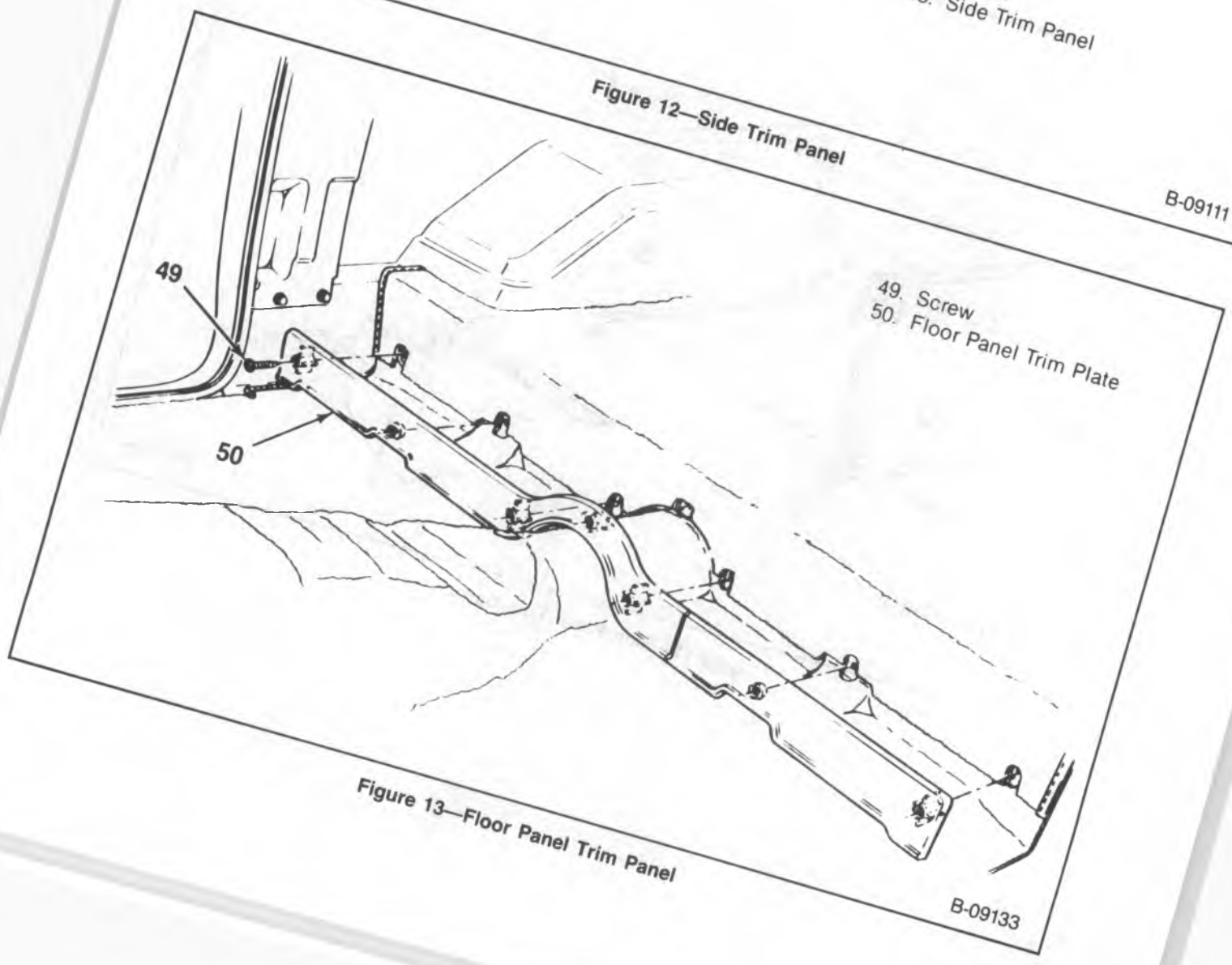

49. Screw
50. Floor Panel Trim Plate

Figure 13—Floor Panel Trim Panel

B-09133

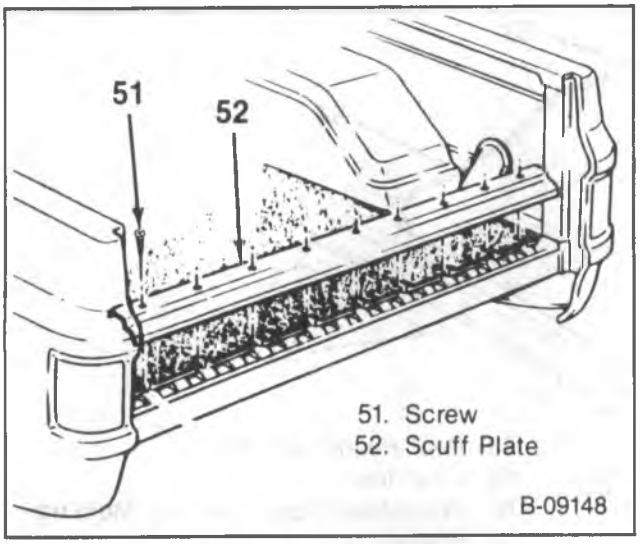

Figure 14—Rear Scuff Plate

HEADLINER AND TRIM REPLACEMENT

Remove or Disconnect (Figure 16)

1. Windshield upper garnish molding screws (56) and the molding (55).
2. Side window garnish molding screws (58) and the molding (59).
3. Windshield garnish molding screws and the molding (57).
4. Roof rear header molding screws (60) and the molding (53).
5. Lock pillar garnish molding screws and the molding (61).
6. Sunshade screws and the sunshade (figure 10).
7. Headliner (54) from the vehicle.

Install or Connect (Figure 16)

1. Headliner (54) to the vehicle.
2. Sunshade and screws (figure 10).
3. Lock pillar garnish molding (61) and screws.
4. Roof rear header molding (53) and screws (60).
5. Windshield garnish molding (57) and screws.
6. Side window garnish molding (59) and screws (58).
7. Windshield upper garnish molding (55) and screws (56).

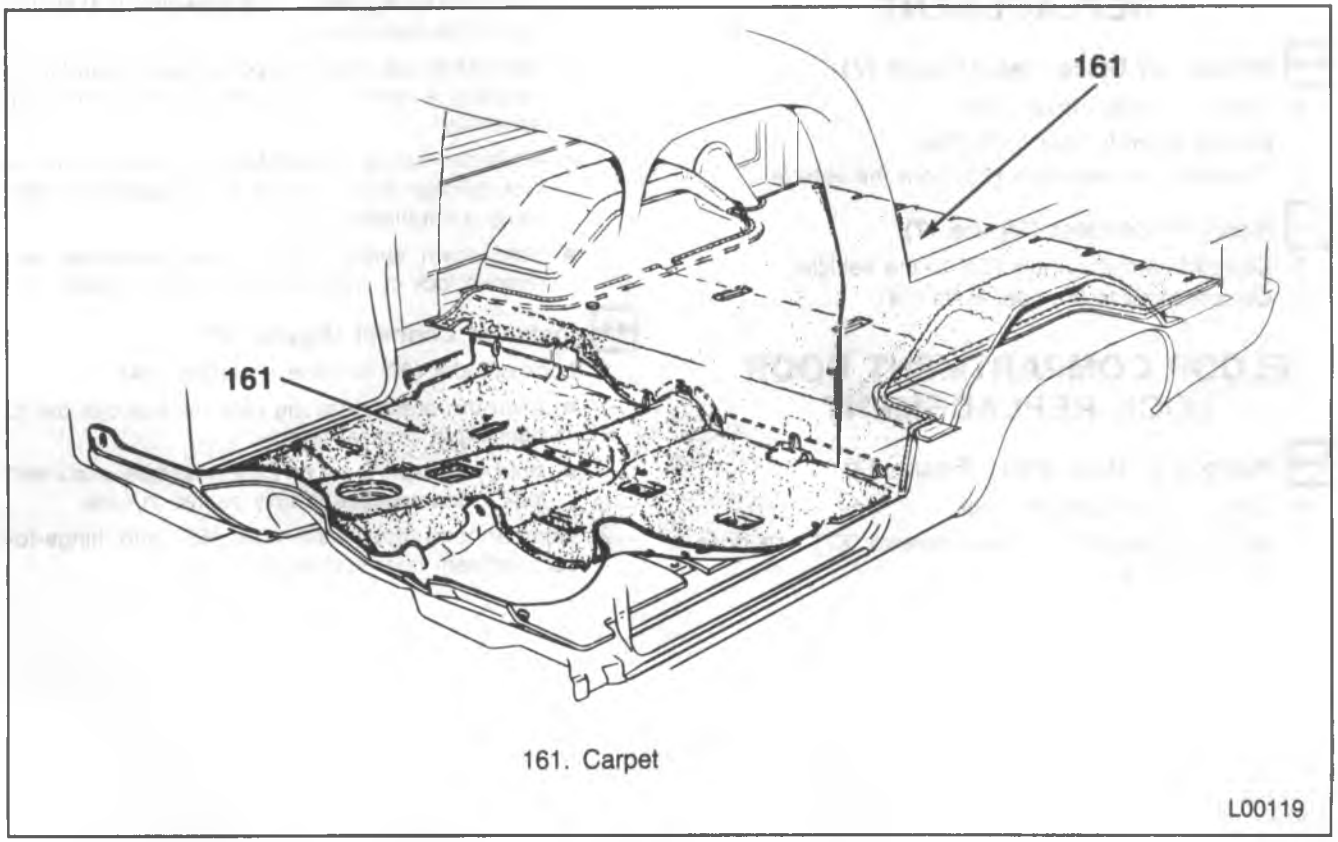

Figure 15—Carpet Assemblies

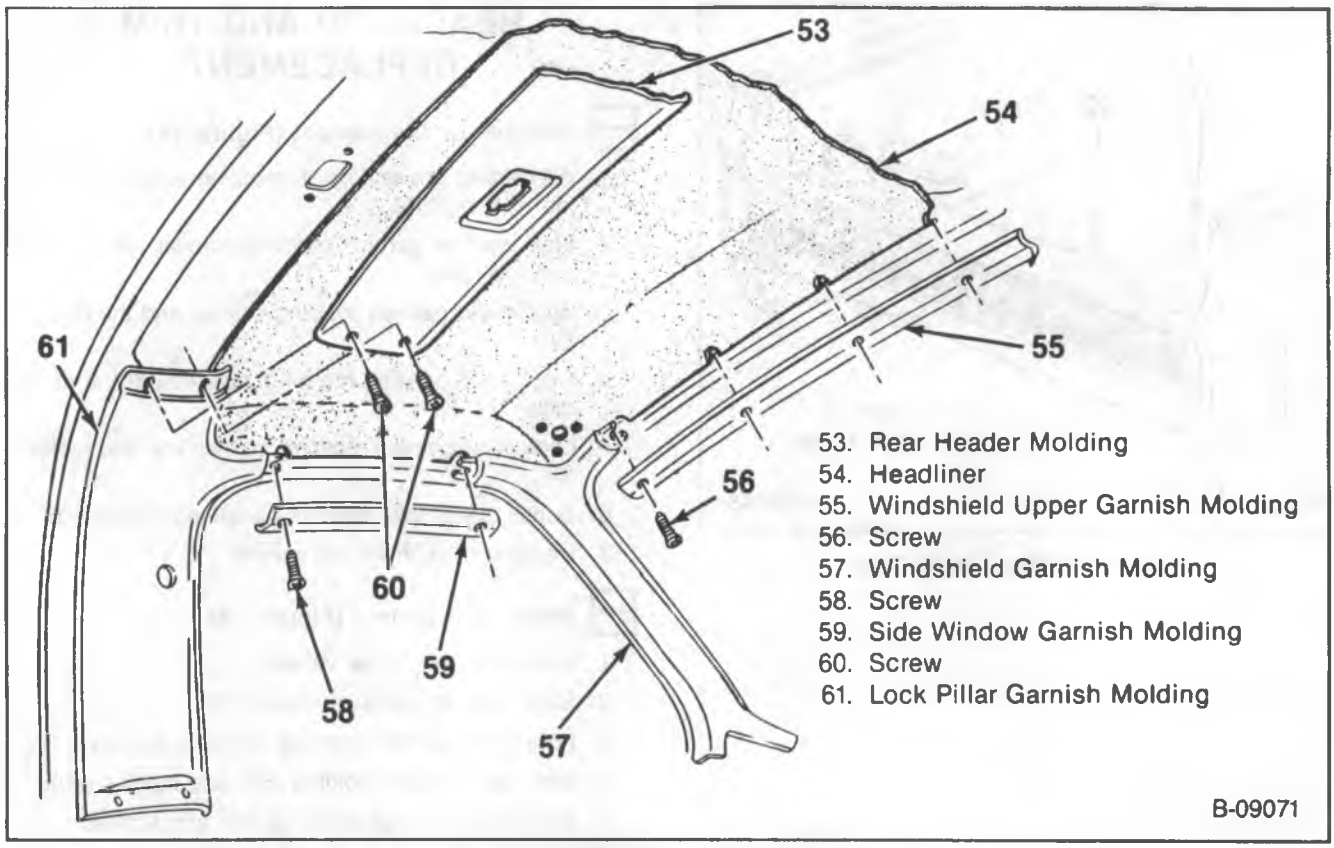

Figure 16—Headliner and Interior Trim

FRONT FLOOR COMPARTMENT REPLACEMENT

Remove or Disconnect (Figure 17)

- Open the compartment door.

1. Compartment to floor bolts (74).
2. Compartment assembly (73) from the vehicle.

Install or Connect (Figure 17)

1. Compartment assembly (73) to the vehicle.
2. Compartment to the floor bolts (74).

FLOOR COMPARTMENT DOOR LOCK REPLACEMENT

Remove or Disconnect (Figure 17)

- Open the compartment door.

1. Hinge-to-compartment door screws (67) and door assembly (65).
2. Lock cylinder (62) from case assembly (64).
   - Pull down spring pin on case assembly (64) so that it is in the open position.
   - Depress brass retaining pin on lock cylinder by inserting a pointed tool into the hole on case assembly.
   - While depressing brass retaining pin, pry up on the lock cylinder from outside of compartment door using a flat-bladed tool.
   - Hold down spring pin on case assembly and remove lock cylinder using a wiggling motion.

Install or Connect (Figure 17)

1. Lock cylinder (62) to case assembly (64).
   - Align the brass retaining pins on lock cylinder to opening in case assembly.
   - Hold down spring pin on case assembly and insert lock cylinder until it is fully seated in case.
2. Compartment door assembly (65) and hinge-to-compartment door screws (67).

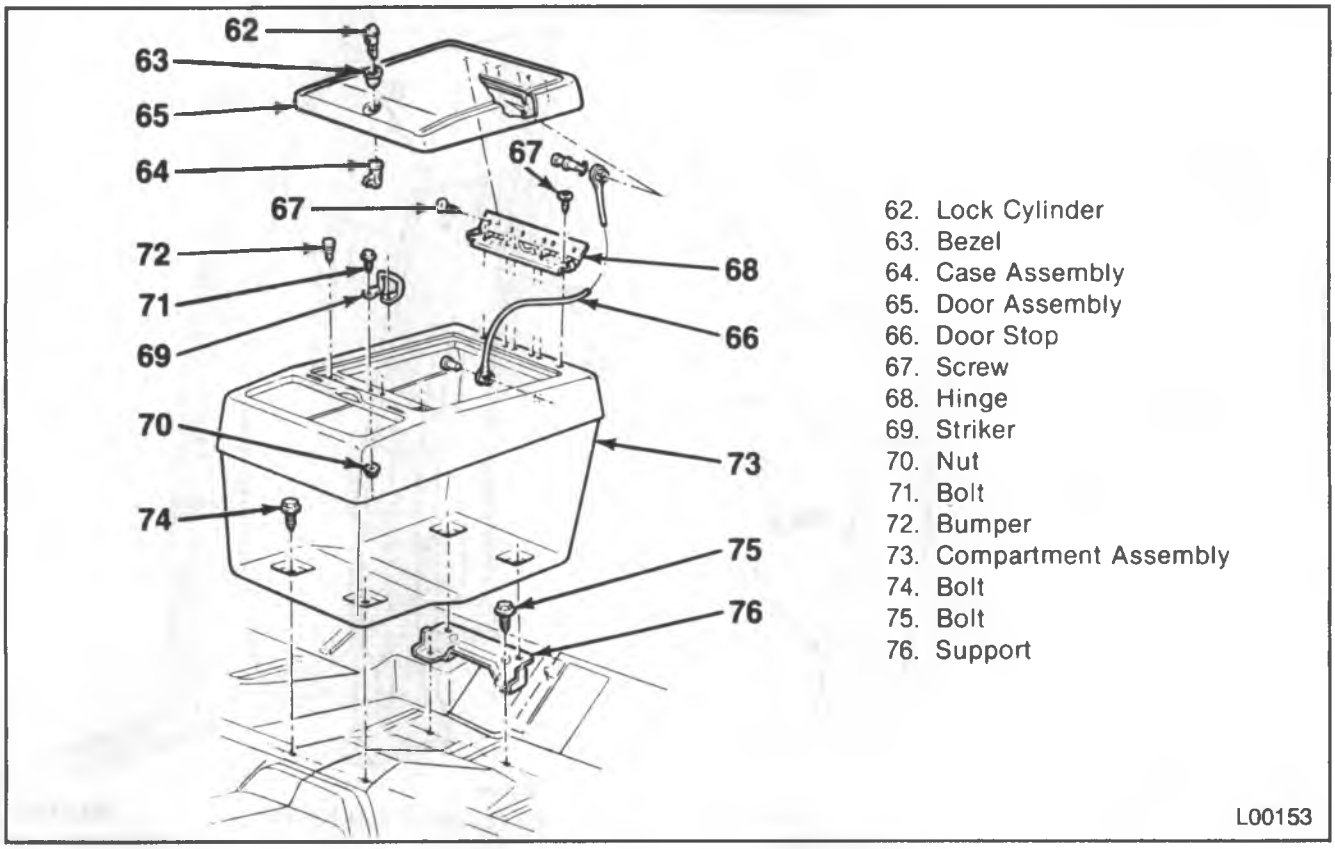

Figure 17—Floor Compartment

SUBURBAN MODELS ON-VEHICLE SERVICE

CARPET REPLACEMENT

Remove or Disconnect (Figures 18 through 23)

1. Seats and seat belts. Refer to SEATS (SEC. 10A2).
2. Front and rear door scuff plates (Figures 5 and 6).
3. Kick panel.
4. Rear corner garnish molding screws (77) and the molding (78).
5. Rear lock pillar garnish molding screws (79) and the molding (80).
6. Front lock pillar garnish molding screws (81) and the molding (82).
7. Body side trim panel screws (83) and the panel (84).
8. Front scuff plate screws (85) and the plate (86).
9. Rear scuff plate screws (87) and the plate (88).
10. Dash panel retainers.
11. Carpet (89) from the vehicle.

Install or Connect (Figures 18 through 23)

1. Carpet (89) to the vehicle.
2. Dash panel retainers.
3. Rear scuff plate (88) and screws (87).
4. Front scuff plate (86) and the screws (85).
5. Body side trim panel (84) and the screws (83).

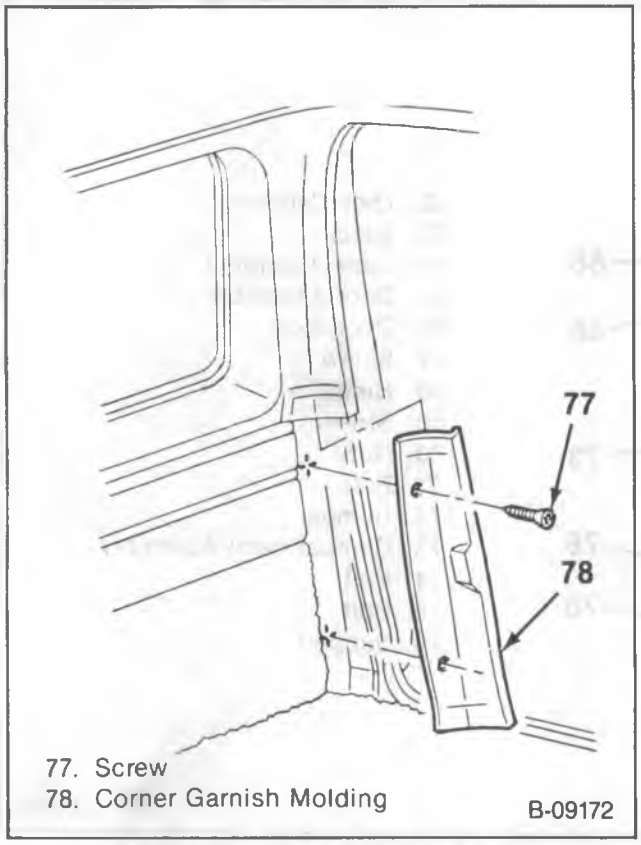

Figure 18—Corner Garnish Molding

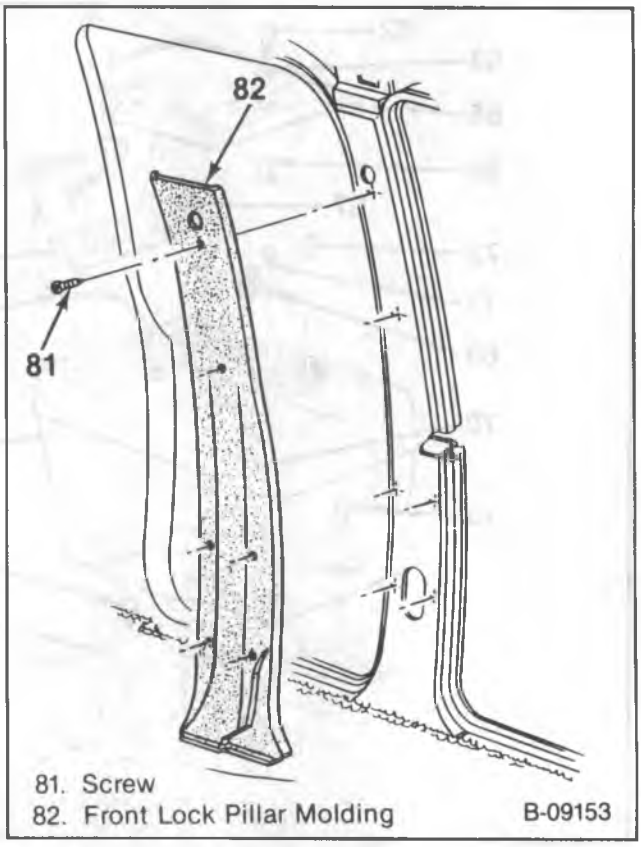

Figure 20—Front Lock Pillar Molding

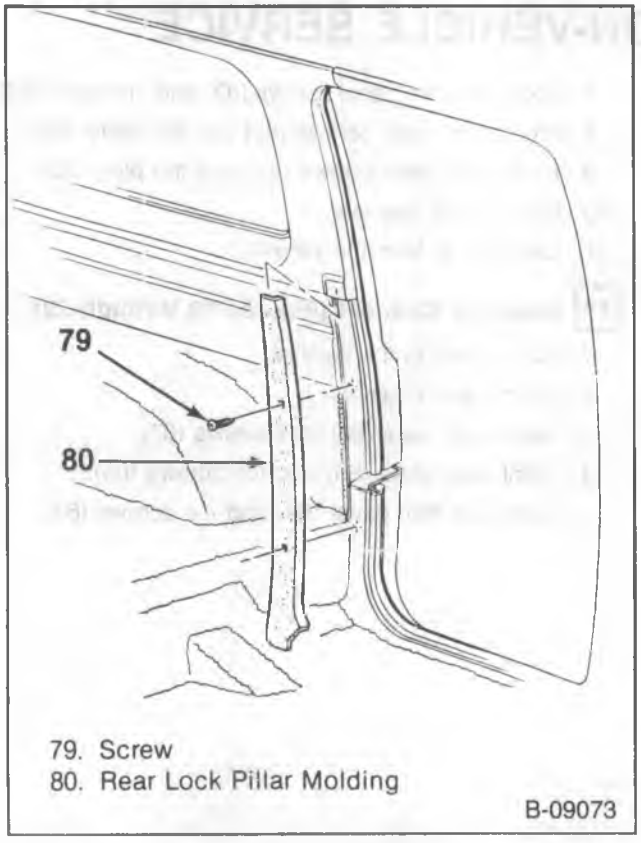

Figure 19—Rear Lock Pillar Molding

6. Front lock pillar garnish molding (82) and the screws (81).
7. Rear lock pillar garnish molding (80) and the screws (79).
8. Rear corner garnish molding (78) and the screws (77).
9. Kick panel.
10. Front and rear door scuff plates (Figures 5 and 6).
11. Seats and seat belts. Refer to SEATS (SEC. 10A2).

HEADLINER AND TRIM REPLACEMENT

Remove or Disconnect (Figures 24 and 25)

1. Windshield upper garnish molding screws (90) and the molding (91).
2. Side header garnish molding screws (92) and the molding (93).
3. Windshield garnish molding screws and the molding (94).
4. Rear roof header molding screws (95) and the molding (96) or rear A/C/ trim panel molding screws and the panel (if equipped).
5. Side header rear garnish molding screws (97) and the molding (98) (if equipped).
6. Upper side garnish molding screws (99) and the molding (100) (if equipped).
7. Roof inner trim panel screws (101) and the panel (102).
8. Headliner (103) from the vehicle.

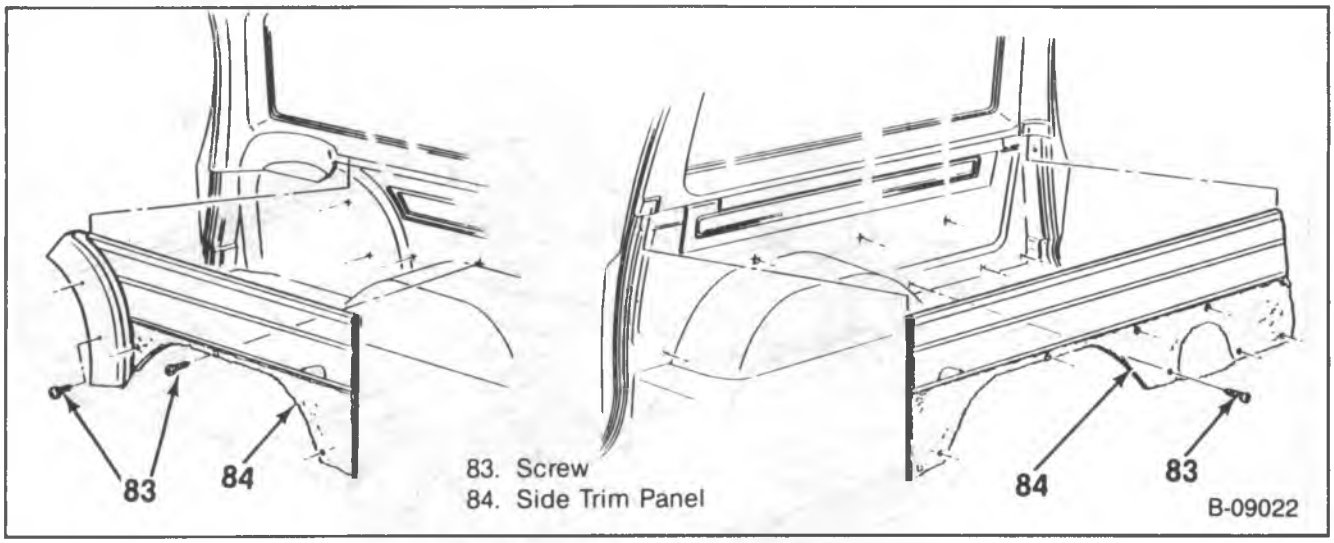

Figure 21—Side Trim Panel

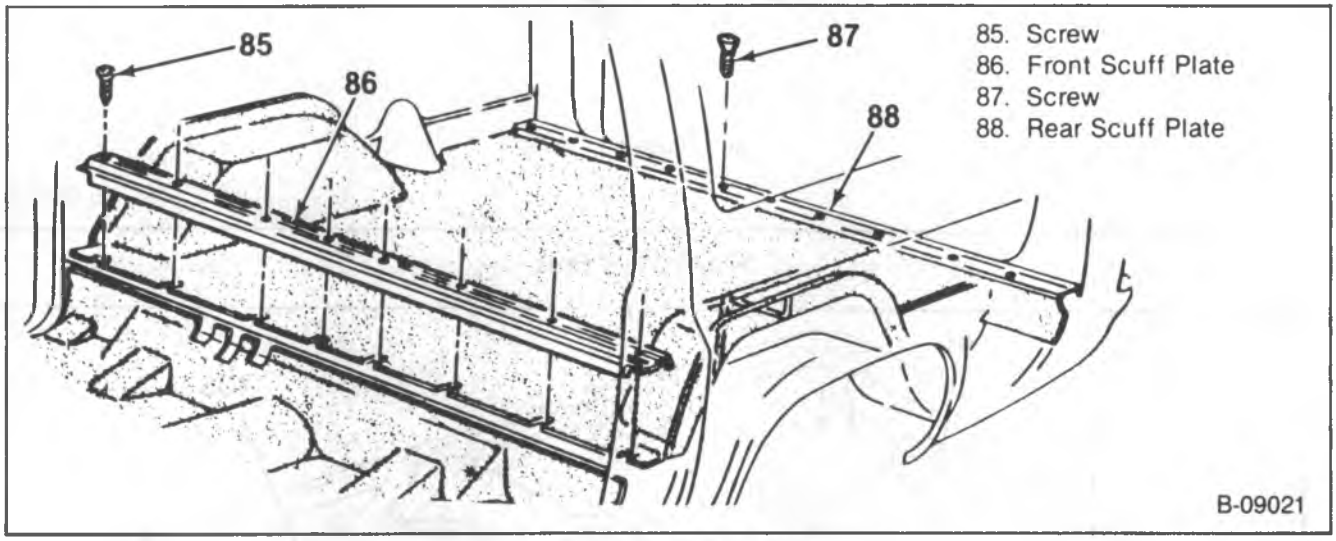

Figure 22—Scuff Plates

Install or Connect (Figures 24 and 25)

1. Headliner (103) to the vehicle.
2. Roof inner trim panel (102) and screws (101).
3. Upper side garnish molding (100) and screws (99) (if equipped).
4. Side header rear garnish molding (98) and screws (97) (if equipped).
5. Rear roof header molding (96) and screws (95) or rear A/C trim panel and screws (if equipped).
6. Windshield garnish molding (94) and screws.
7. Side header garnish molding (93) and screws (92).
8. Windshield upper garnish molding (91) and screws (90).

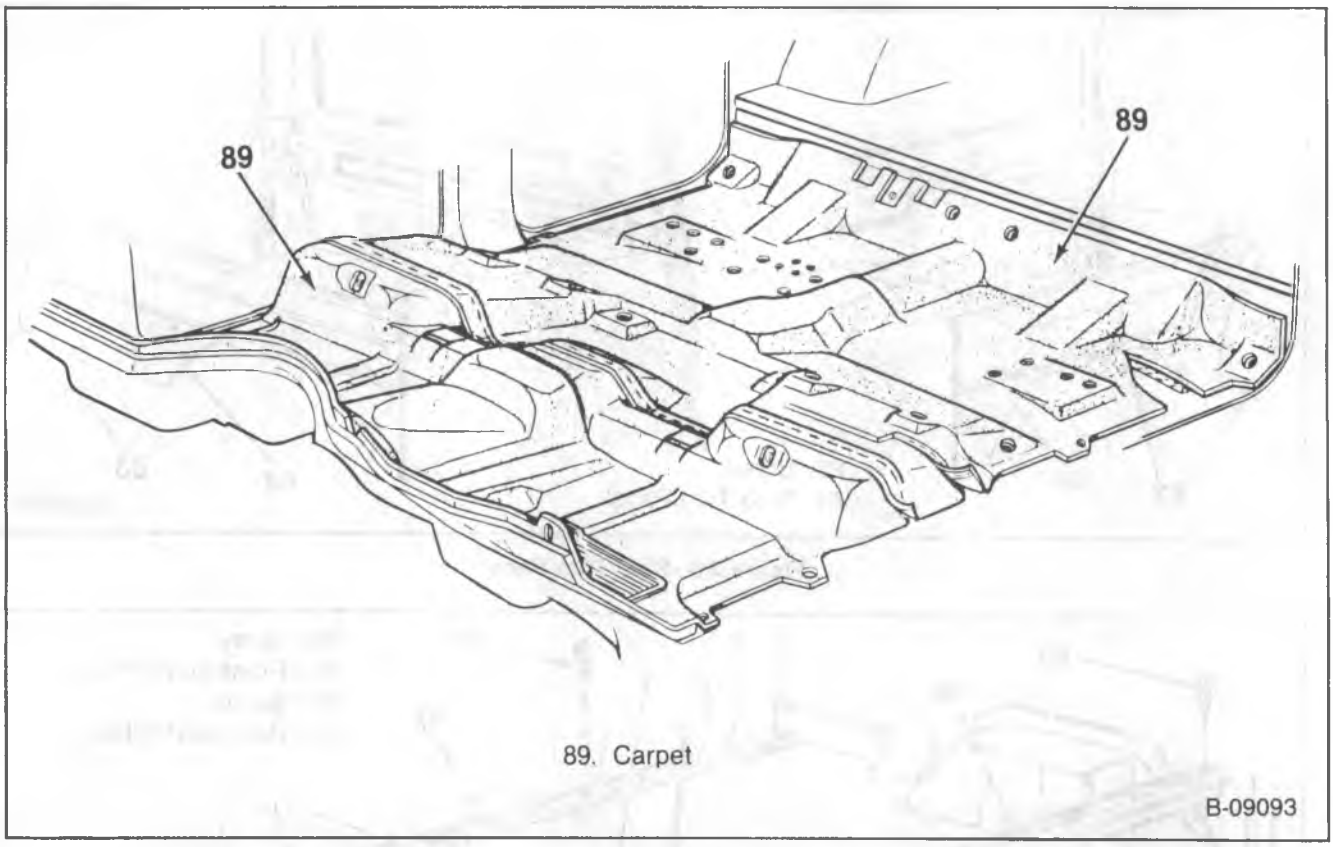

Figure 23—Carpet

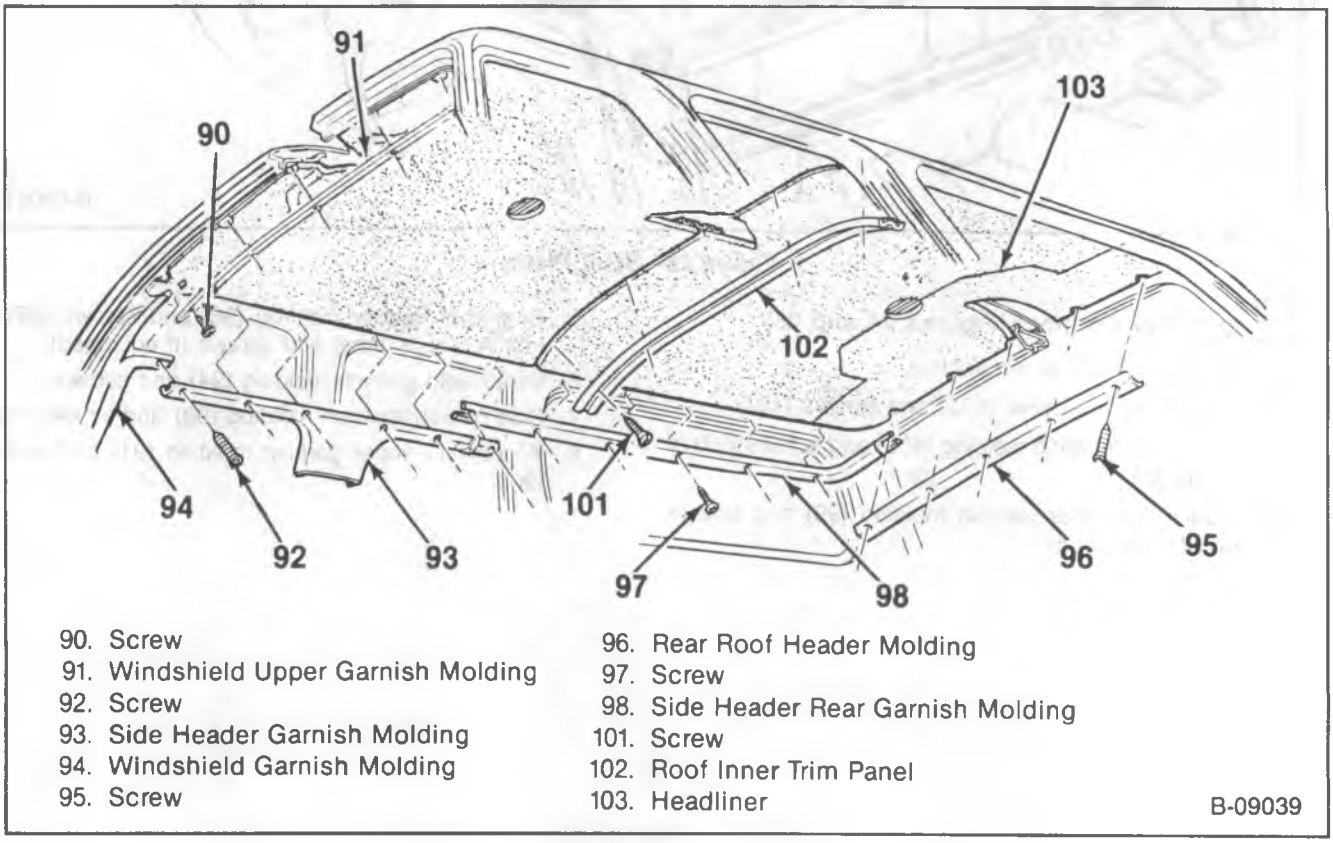

Figure 24—Headliner and Interior Trim

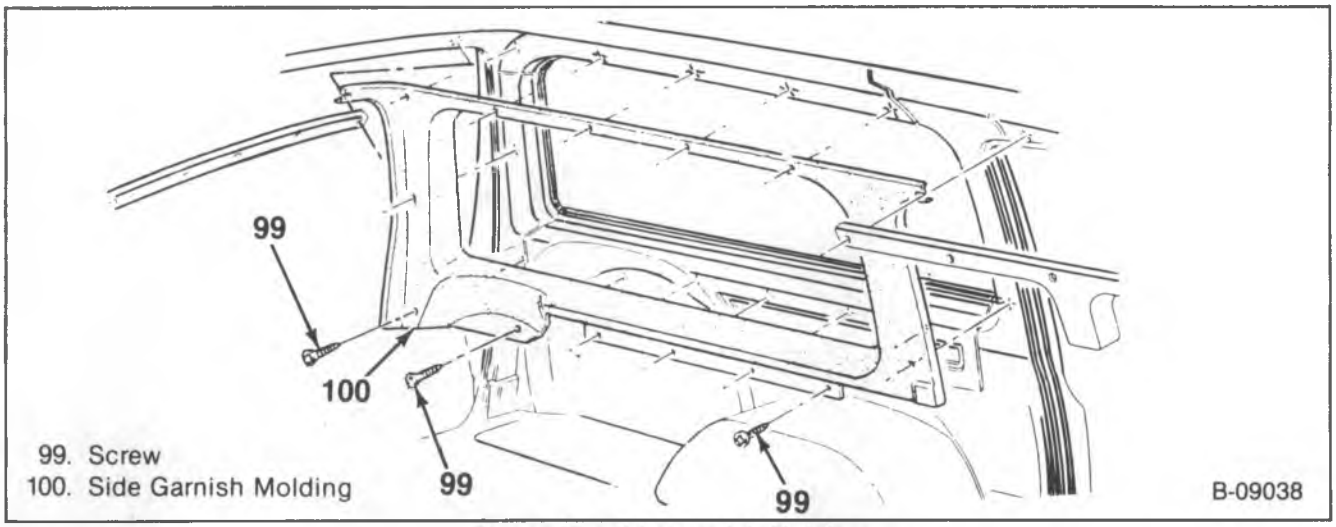

Figure 25—Side Garnish Molding

ROOF REAR HEADER TRIM PANEL REPLACEMENT

Remove or Disconnect (Figures 26 and 27)

1. Lower trim panel screws (104) and the lower panel (105).
2. Upper trim panel screws (106) and the upper panel (107).

Install or Connect (Figures 26 and 27)

1. Upper trim panel (107) and the screws (106).
2. Lower trim panel (105) and the screws (104).

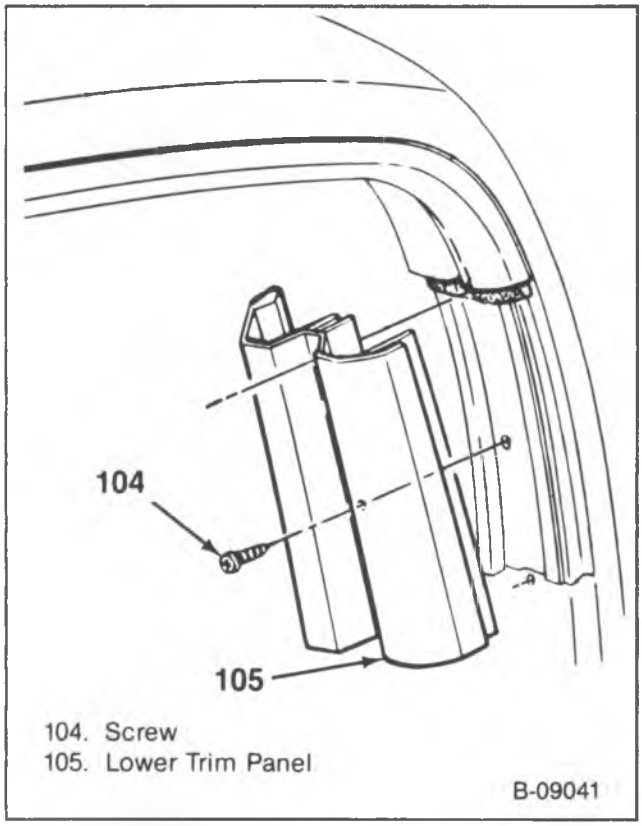

Figure 26—Rear Header Lower Trim Panel

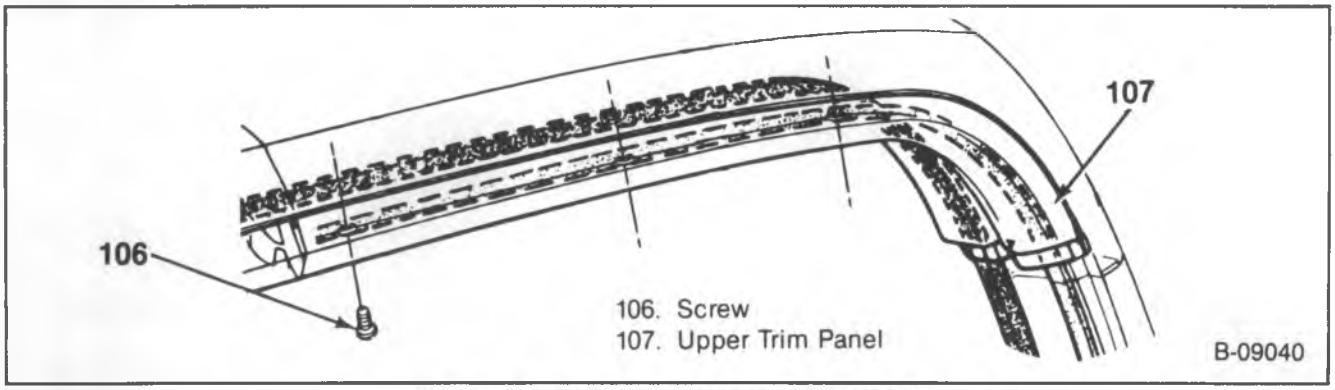

Figure 27—Rear Header Upper Trim Panel

SECTION 10A5

END GATE

NOTICE: When fasteners are removed, always reinstall them at the same location from which they were removed. If a fastener needs to be replaced, use the correct part number fastener for that application. If the correct part number fastener is not available, a fastener of equal size and strength (or stronger) may be used. Fasteners that are not reused, and those requiring thread locking compound will be called out. The correct torque value must be used when installing fasteners that require it. If the above conditions are not followed, parts or system damage could result.

CONTENTS

SUBJECT	PAGE
Fleet Side Models On-Vehicle Service	10A5- 1
End Gate Replacement	10A5- 1
Handle and Latch Replacement	10A5- 2
Utility Vehicle Models On-Vehicle Service	10A5- 3
End Gate Replacement	10A5- 3
Torque Rod Replacement	10A5- 4
Hinge Replacement	10A5- 5
End Gate Cover Replacement	10A5- 5
Handle and Control Assembly Replacement	10A5- 5
Latch Replacement	10A5- 6
Regulator Replacement	10A5- 7
Window Motor and Blockout Switch Replacement	10A5- 7
Sash Assembly Replacement	10A5- 9
Run Channel Replacement	10A5- 9
End Gate Outside Crank Replacement	10A5-10
Window Glass Seal Replacement	10A5-10
Weatherstrip Replacement	10A5-11
Suburban Models On-Vehicle Service	10A5-12
End Gate Replacement	10A5-12
Torque Rod Replacement	10A5-12
Hinge Replacement	10A5-12
End Gate Trim and Cover Panel Replacement	10A5-14
Handle and Control Assembly Replacement	10A5-14
Latch Replacement	10A5-14
Regulator Replacement	10A5-15
Blockout Switch Replacement	10A5-16
Sash Assembly Replacement	10A5-16
Run Channel Replacement	10A5-16
End Gate Outside Crank Replacement	10A5-17
Window Glass Seal Replacement	10A5-17
Weatherstrip Replacement	10A5-17

FLEET SIDE MODELS ON-VEHICLE SERVICE

END GATE REPLACEMENT

Remove or Disconnect (Figure 1)

- Open the end gate and support it with a table or other suitable support.

1. Link and striker plate (8) to fender bolts (17).
2. Link and striker (8) from the end gate.
   - Rotate the link until it aligns with the tab (9) on the end gate, and pull it from the end gate.
3. Hinge (14) to end gate bolts (13).
4. End gate (12) from the vehicle.
5. Inner hinge half (A).
6. Hinge (14) to fender bolts (16).
7. Outer hinge half (B).
8. Bumper (10) to fender screws (11).
9. Bumpers (10) from the vehicle.

Install or Connect (Figure 1)

1. Bumpers (10) to the vehicle.
2. Bumper (10) to fastener screws (11).
3. Outer hinge half (B).
4. Hinge (14) to fender bolt (16).
5. Inner hinge half (A).
6. End gate (12) to the vehicle.
7. Hinge (14) to end gate bolts (13).
8. Link and striker (8) to the end gate.
   - Place the slot on the link in line with the tab (9) on the end gate, and place the link onto the end gate. Pivot the link into its proper position.
9. Link and striker to the fender.
10. Link and striker to fender bolts (17).

HANDLE AND LATCH REPLACEMENT

Remove or Disconnect (Figure 2)

- Lower and support the end gate with a table or other suitable support.

1. Latch rods (19) from the clips (20).
2. End gate to handle bolts (22).
3. Handle (21) from the end gate.
4. Link from the end gate.
   - Refer to "End Gate Replacement."
5. Latch (18) to end gate bolts (23).
6. Latch (18) from the vehicle.

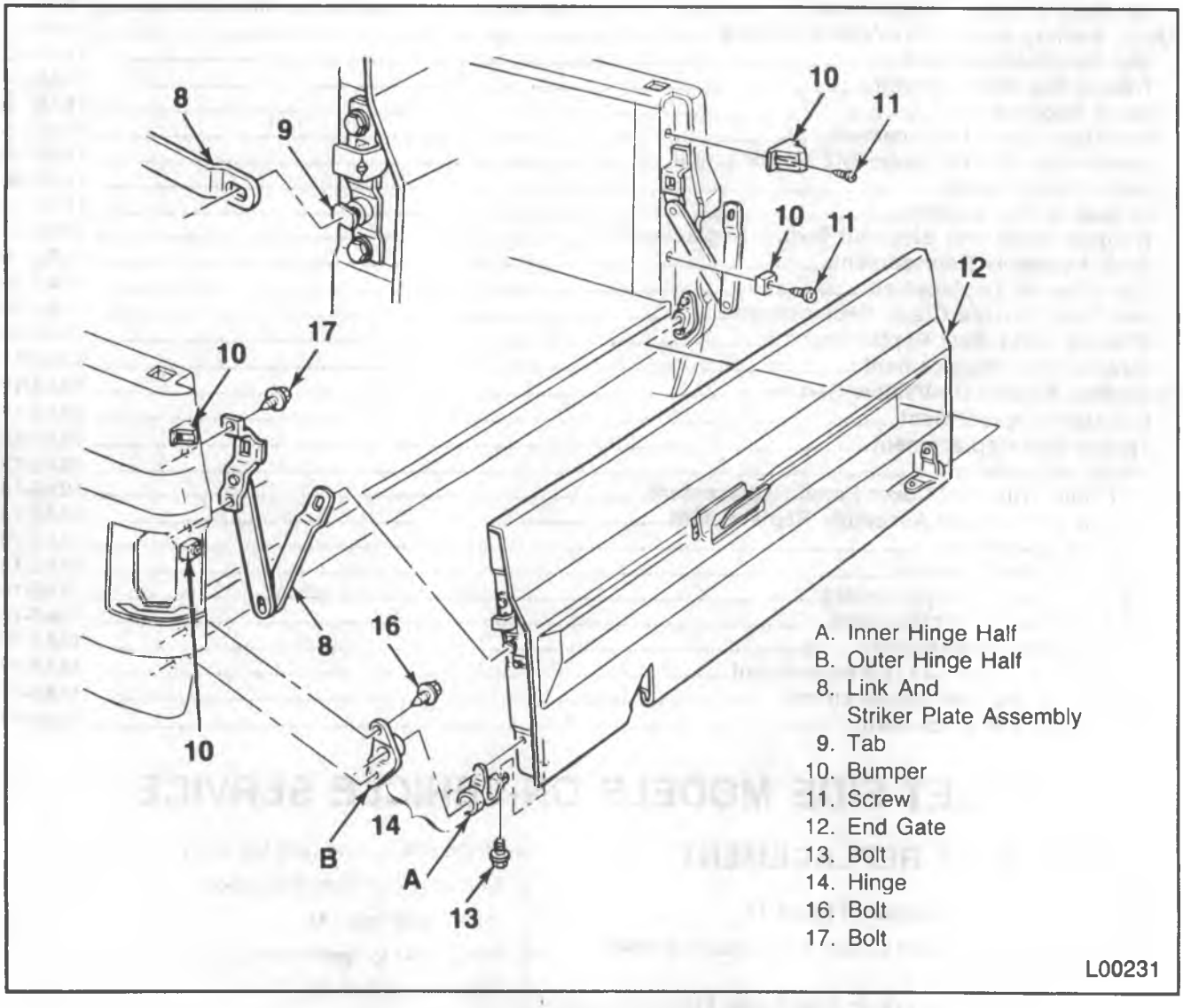

Figure 1—Fleet Side End Gate Components

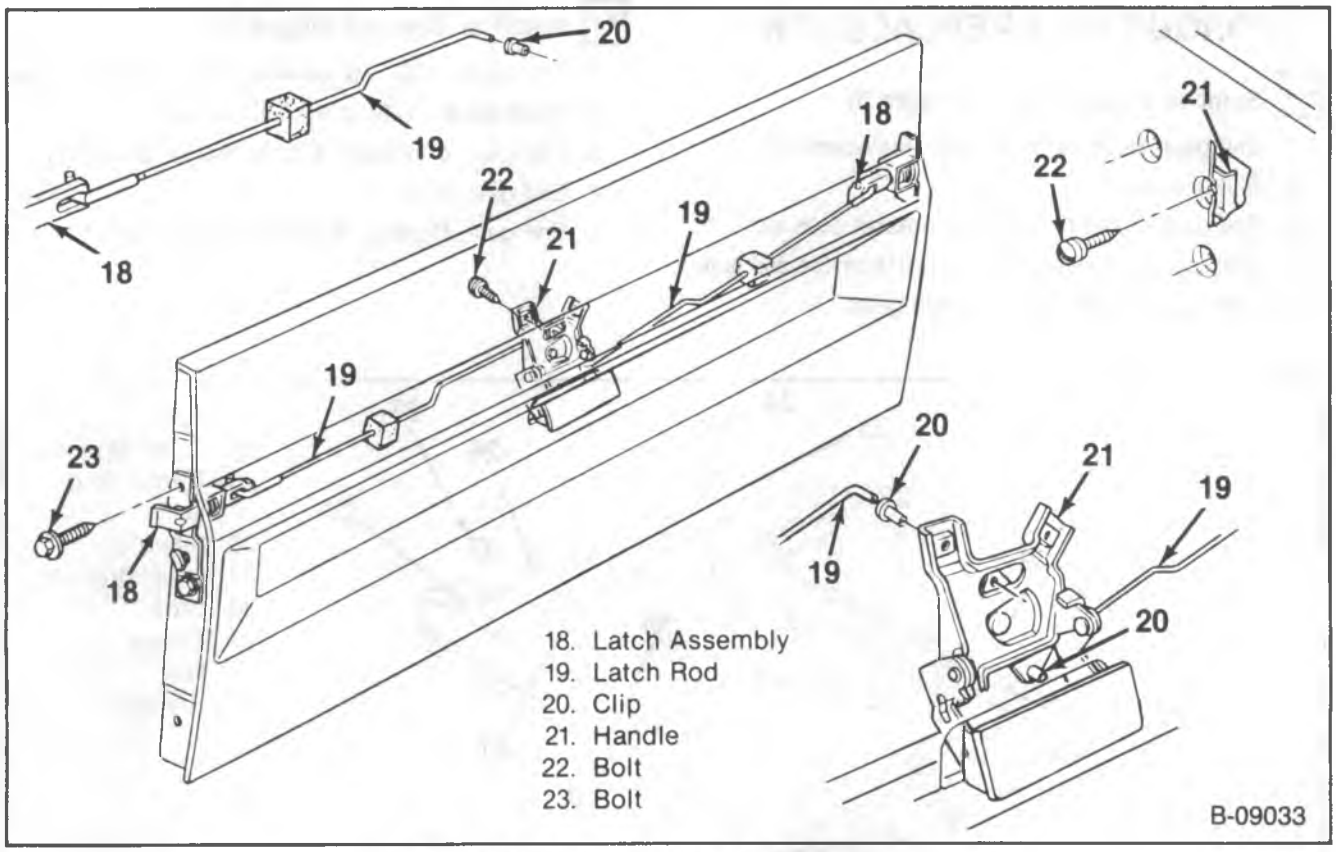

Figure 2—Handle and Latch Components

Install or Connect (Figure 2)

1. Latch (18) to the vehicle.
2. Latch (18) to end gate bolts (23).
3. Link to the end gate.
   - Refer to "End Gate Replacement"
4. Handle (21) to the end gate.
5. End gate to handle bolts (22).
6. Latch rods (19) to the clips (20).

UTILITY VEHICLE MODELS ON-VEHICLE SERVICE

END GATE REPLACEMENT

Remove or Disconnect (Figures 3, 4, and 5)

- The end gate must be in the closed position.

1. Torque rod to frame stud (30) and nut (32).
   - Allow the torque rod to swing down.

- Open the end gate, and support it with a table or other suitable support.

2. Electrical wiring harness (if equipped). Refer to "End Gate Cover Replacement" for access to the harness.
3. Cable (34) to end gate opening bolts (37), spacers (36), and washers (35).
4. Torque rod bracket bolts (24) and brackets (25).
5. Hinge (49) to floor panel bolts (48) from the under side of the vehicle.
6. End gate from the vehicle.
   - Lift the end gate from the body.
   - Guide the torque rods over the gravel deflectors to prevent damage.

Install or Connect (Figures 3, 4, and 5)

1. End gate to the vehicle.
   - Guide the torque rods over the gravel deflectors to prevent damage.
   - Insert the hinges into the floor panel slots.
2. Hinge (49) to floor pan bolts (48) to the under side of the vehicle.
3. Torque rod brackets (25) and bolts (24).
4. Cable (34) to the end gate opening with bolts (37), spacers (36), and washers (35).
5. Electrical wiring harness (if equipped). Refer to "End Gate Cover Replacement" for access to the harness.

- Close the end gate.

6. Torque rod to frame stud (30) and nut (32).
7. Torque rods onto the studs.

TORQUE ROD REPLACEMENT

Remove or Disconnect (Figure 3)

1. End gate. Refer to "End Gate Replacement."
2. End gate cover.
3. End gate to torque rod inner bracket bolts (27).
4. Torque rod (26) with silencers (28) from the end gate.
5. Inner bracket (29) from the end gate.

Install or Connect (Figure 3)

1. Torque rod (26) with silencers (28) to the end gate.
2. Inner bracket (29) to the torque rod.
3. End gate to torque rod inner bracket bolts (27).
4. End gate cover.
5. End gate. Refer to "End Gate Replacement."

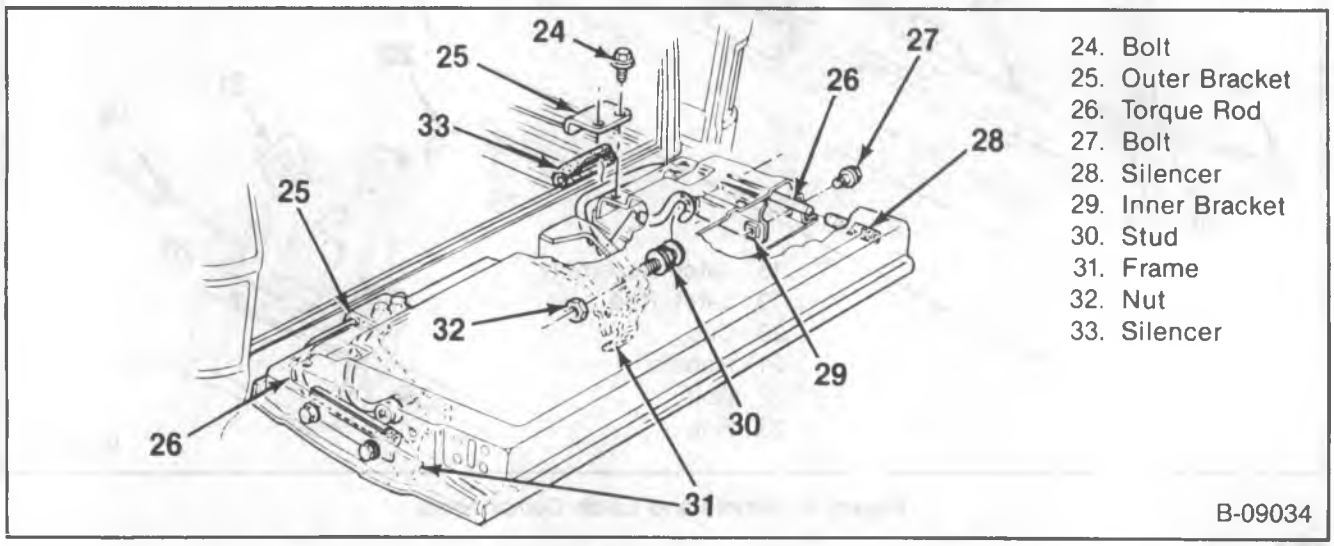

Figure 3—Torque Rod — Utility Vehicle

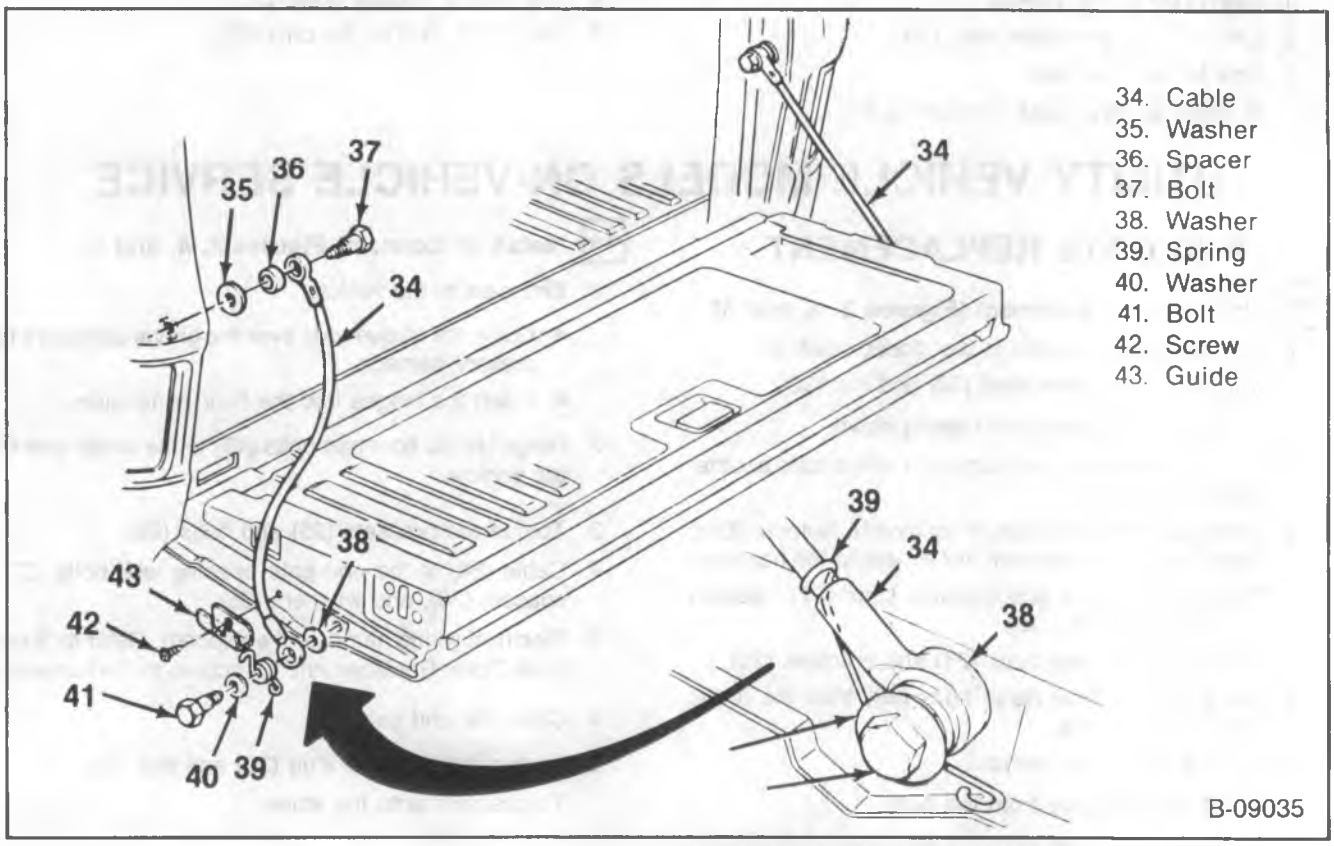

Figure 4—Cable Assembly Components

HINGE REPLACEMENT

Remove or Disconnect (Figure 5)

- Lower the end gate.

1. Hinge to body bolts (48) for the hinge to be removed only.

- Loosen the hinge to body bolt (48) on the opposite hinge.

2. Hinge to end gate bolts (47) for the hinge to be removed.

- Pull the end gate away from the body several inches and remove the hinge from the body.
- Lift the end gate slightly to allow removal of the hinge from the end gate.

Install or Connect (Figure 5)

- Lift the end gate slightly and install the hinge to the end gate.
- Pull the end gate away from the body several inches, and insert the hinge into the body.

1. Hinge to end gate bolts (47).
2. Hinge to body bolts (48).

- Tighten the hinge to body bolts on the opposite hinge.

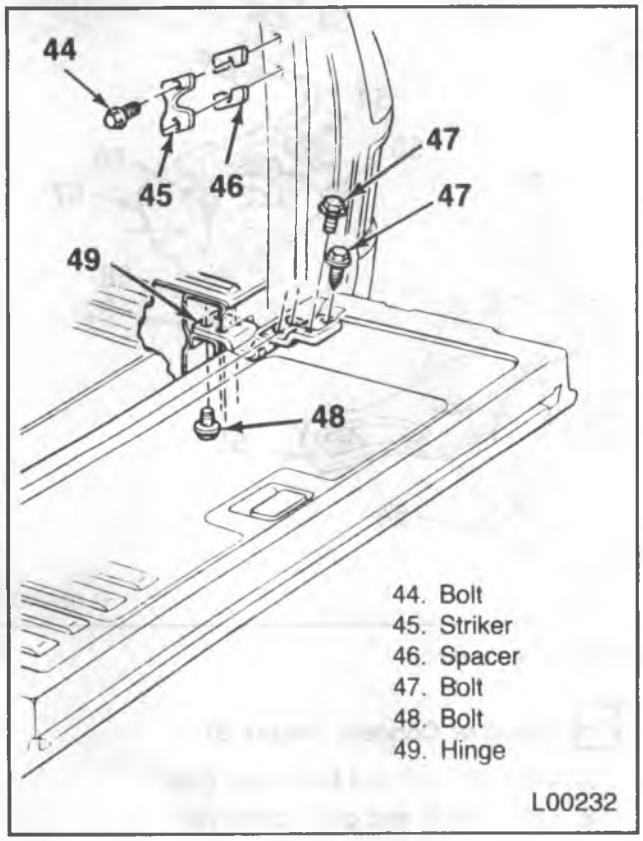

Figure 5—Hinge Assembly

END GATE COVER REPLACEMENT

Remove or Disconnect (Figure 6)

1. End gate cover screws (51).
2. End gate cover (50).

Install or Connect (Figure 6)

1. End gate cover (50).
2. End gate cover screws (51).

HANDLE AND CONTROL ASSEMBLY REPLACEMENT

Remove or Disconnect (Figure 7)

1. End gate cover.
2. Control rod (64) from the handle (61).
3. Handle to end gate screws (62).
4. Handle (61) from the end gate.
5. Right and left latch rods (65) from the control assembly.
6. Control assembly to end gate bolts (60).
7. Control assembly (55) from the end gate.
8. Window lockout rod spring (54).
9. Lockout rod (53) to end gate bolts (52).
10. Lockout rod (53) from the end gate.

Install or Connect (Figure 7)

1. Lockout rod (53) to the end gate.
   - The bottom of the rod must fit into the clip at the base of the end gate.
2. Lockout rod (53) to end gate bolts (52).
3. Window lockout rod spring (54).
4. Control assembly (55) to the end gate.
5. Control assembly to end gate bolts (60).
6. Right and left latch rods (65) from the control assembly.
7. Handle (61) to the end gate.
8. Handle to end gate screws (62).
9. Control rod (64) to the handle (61).
10. End gate cover.

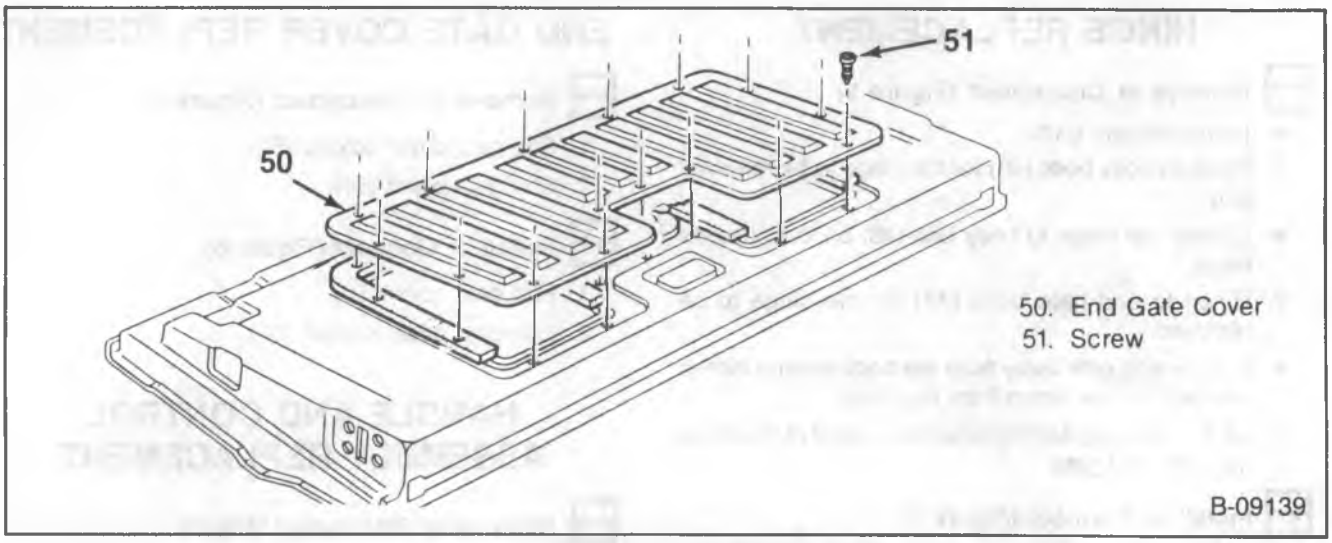

Figure 6—End Gate Cover

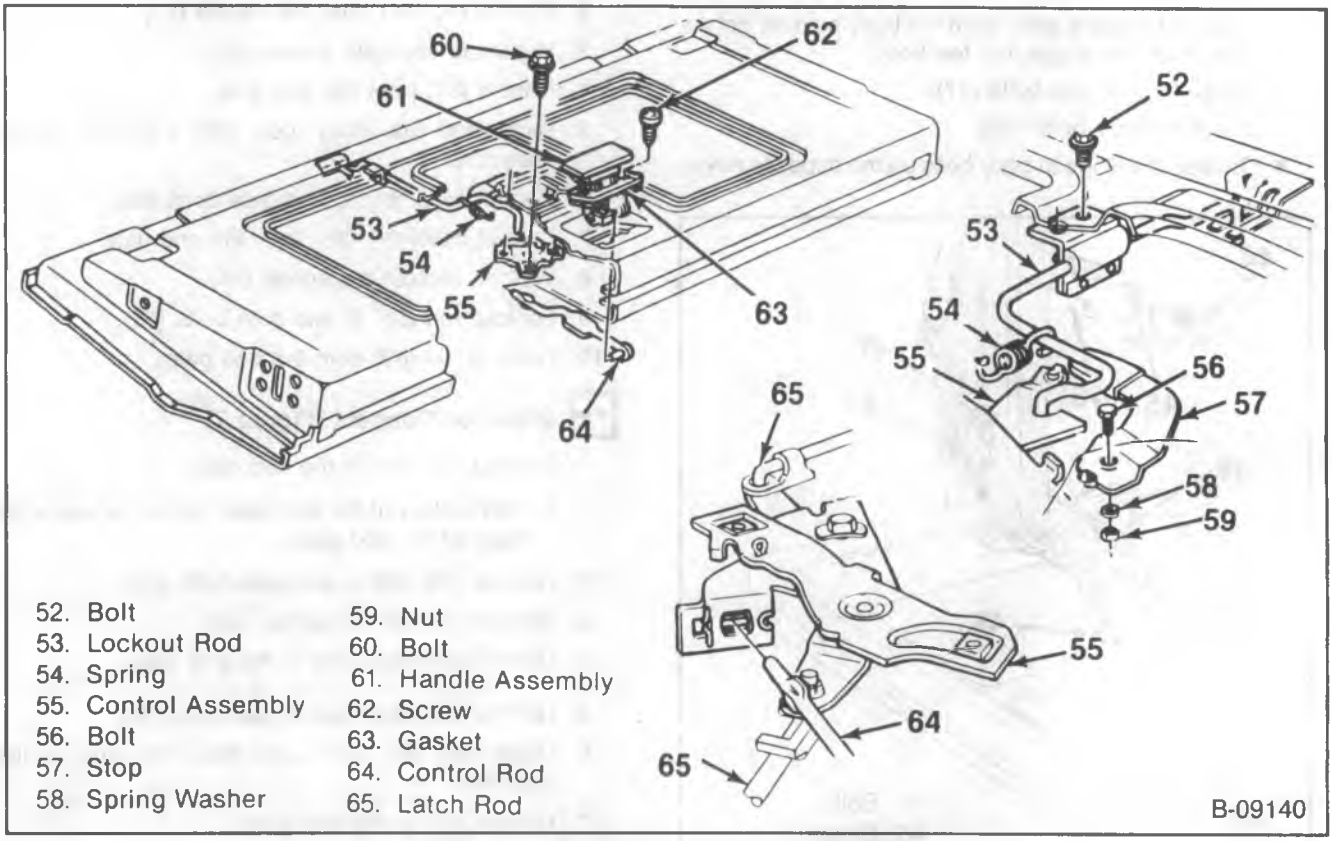

Figure 7—Handle and Control Assembly

LATCH REPLACEMENT

Remove or Disconnect (Figure 8)

1. End gate cover.
2. Right or left latch rod (65) from the control assembly.
3. Latch (66) to end gate screws (67).
4. Latch (66) from the end gate.

Install or Connect (Figure 8)

1. Latch (66) with rod to the end gate.
2. Latch (66) to end gate screws (67).
3. Right or left latch rod (65) to the control assembly.
4. End gate cover.

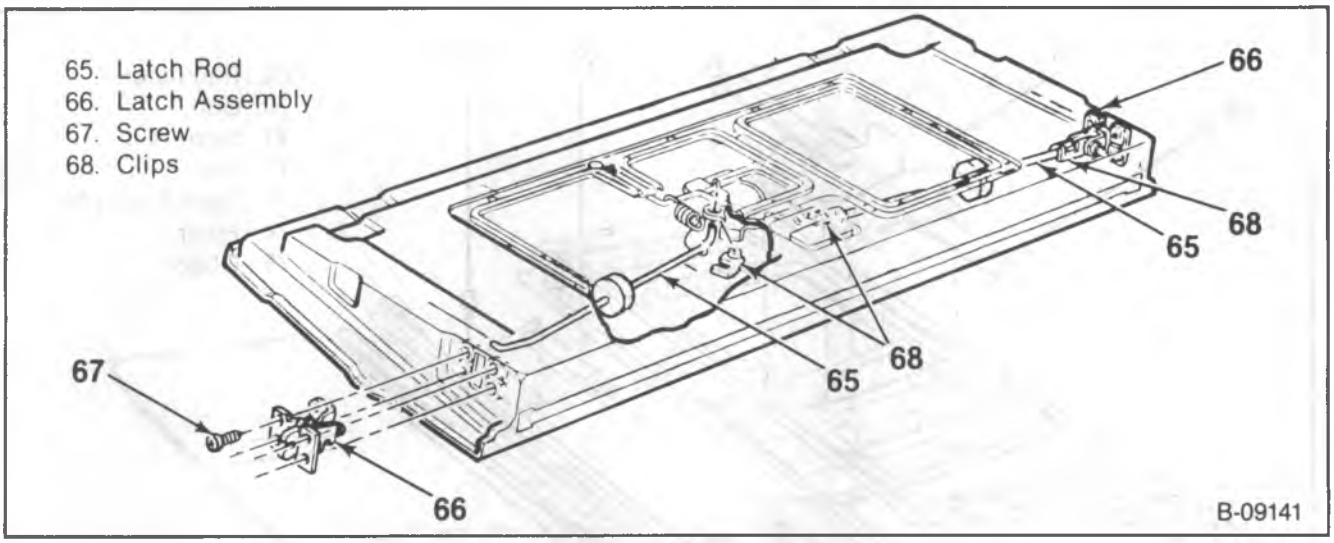

Figure 8—Latch Components

REGULATOR REPLACEMENT

MANUAL REGULATOR

Remove or Disconnect (Figure 9)

1. End gate cover.
2. Control assembly. Refer to "Handle and Control Assembly Replacement."
3. Sash assembly (73). Refer to "Sash Assembly Replacement."
4. Regulator (69) to end gate bolts (70).
5. Regulator (69) from the end gate.

Install or Connect (Figure 9)

1. Regulator (69) to the end gate.
2. Regulator (69) to end gate bolts (70).
3. Sash assembly (73). Refer to "Sash Assembly Replacement."
4. Control assembly. Refer to "Handle and Control Assembly Replacement."
5. End gate cover.

POWER REGULATOR

Remove or Disconnect (Figures 9 and 10)

1. End gate cover.
2. Control assembly. Refer to "Handle and Control Assembly Replacement."
3. Sash assembly (73). Refer to "Sash Assembly Replacement."

CAUTION: Step 4 must be performed if the gear box is removed or disengaged from the regulator lift arms. The lift arms are under tension from the counterbalance spring, and can cause injury if the gear box is removed without locking the sector gears in place.

4. Drill a 3.1 mm (1/8-inch) diameter hole through the sector gear (103) and back plate (104). Install a sheet metal tapping screw into the hole to lock the sector gears in position.
5. Drive cable (77) at regulator (76).
6. Regulator (76) to end gate bolts (78).
7. Regulator (76) from the end gate.
8. Gear assembly (80) to regulator bolts.
9. Gear assembly (80) from the regulator (76).

Install or Connect (Figures 9 and 10)

1. Gear assembly (80) to the regulator (76).
2. Gear assembly (80) to regulator bolts.
3. Regulator (76) to the end gate.
4. Regulator (76) to end gate bolts (78).
5. Drive cable (77) to the regulator (76).

- Remove the sheet metal screw.

6. Sash assembly (73). Refer to "Sash Assembly Replacement."
7. Control assembly. Refer to "Handle and Control Assembly Replacement."
8. End gate cover.

WINDOW MOTOR AND BLOCKOUT SWITCH REPLACEMENT

Remove or Disconnect (Figure 11)

1. End gate panel.
2. Wiring harness from the motor and switch.
3. Cable from the motor.
4. End gate to motor bolts (103).
5. Motor (104) from the end gate.
6. Latch containing the blockout switch from the end gate. Refer to "Latch Replacement."
7. Blockout switch (106) to latch bolts (105).
8. Blockout switch (106) from the latch.

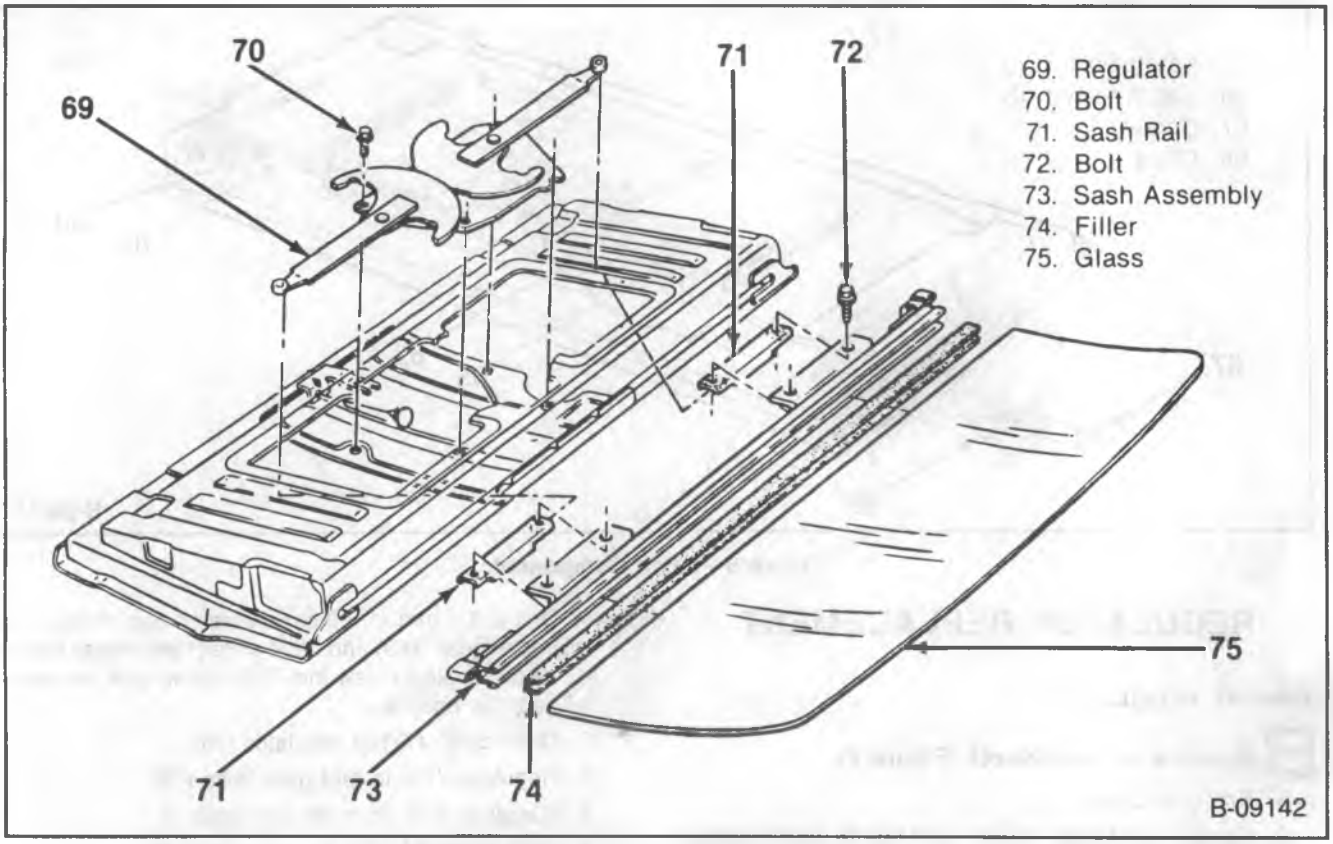

Figure 9—Regulator and Sash Components

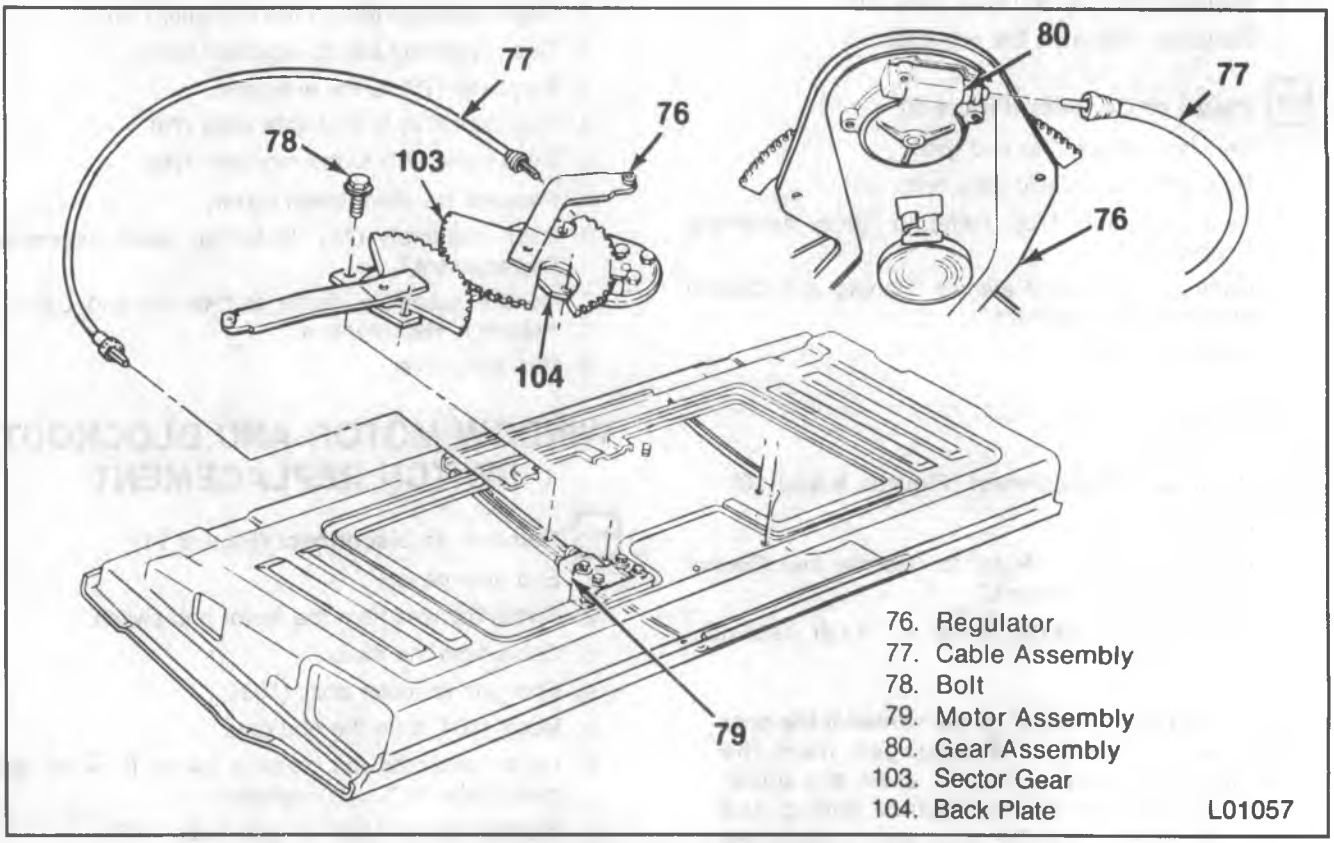

Figure 10—Power Regulator Components

Install or Connect (Figure 11)

1. Blockout switch (106) to the latch.
2. Blockout switch (106) to latch bolts (105).
3. Latch to the end gate. Refer to "Latch Replacement."
4. Motor (104) to the end gate.
5. End gate to motor bolts (103).
6. Cable to the motor.
7. Wiring harness to the motor and the switch.
8. End gate panel.

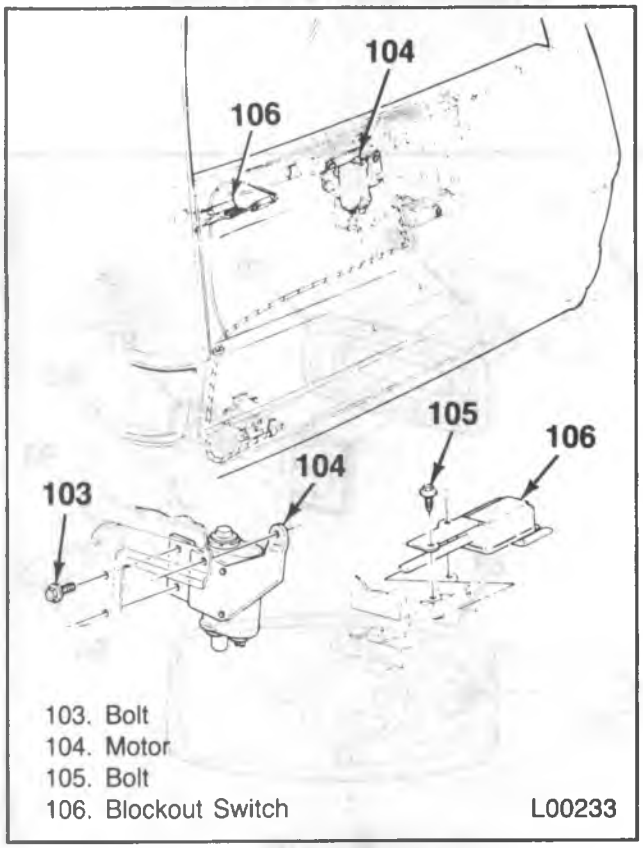

Figure 11—End Gate Electrical Components

SASH ASSEMBLY REPLACEMENT

Remove or Disconnect (Figure 9)

1. Window run channel caps (83) (figure 12).
2. Inner and outer window glass seals. Refer to "Window Glass Seal Replacement."
3. End gate cover.
- Regulate the window so that the sash channel bolts (72) are accessible.
4. Sash (73) to sash channel bolts (72).
5. Sash (73) with glass (75) from the end gate.
6. Sash rails (71) from the regulator (69).

Install or Connect (Figure 9)

1. Sash rails (71) to the regulator (69).
2. Sash (73) with glass (75) to the end gate.
3. Sash (73) to sash channel bolts (72).
4. End gate cover.
5. Inner and outer window glass seals. Refer to "Window Glass Seal Replacement."
6. Window run channel caps (83) (figure 12).

RUN CHANNEL REPLACEMENT

Remove or Disconnect (Figure 12)

1. Window run channel caps (83).
- Completely lower the window.
2. Run channel (81) from the end gate.
   - Pull the channel from the end gate. Twist the channel to clear the window opening.

Install or Connect (Figure 12)

1. Run channel (81) to the end gate.
   - Twist the channel into the window opening.
2. Run channel (81) to end gate bolts (82).
3. Window run channel caps (83).

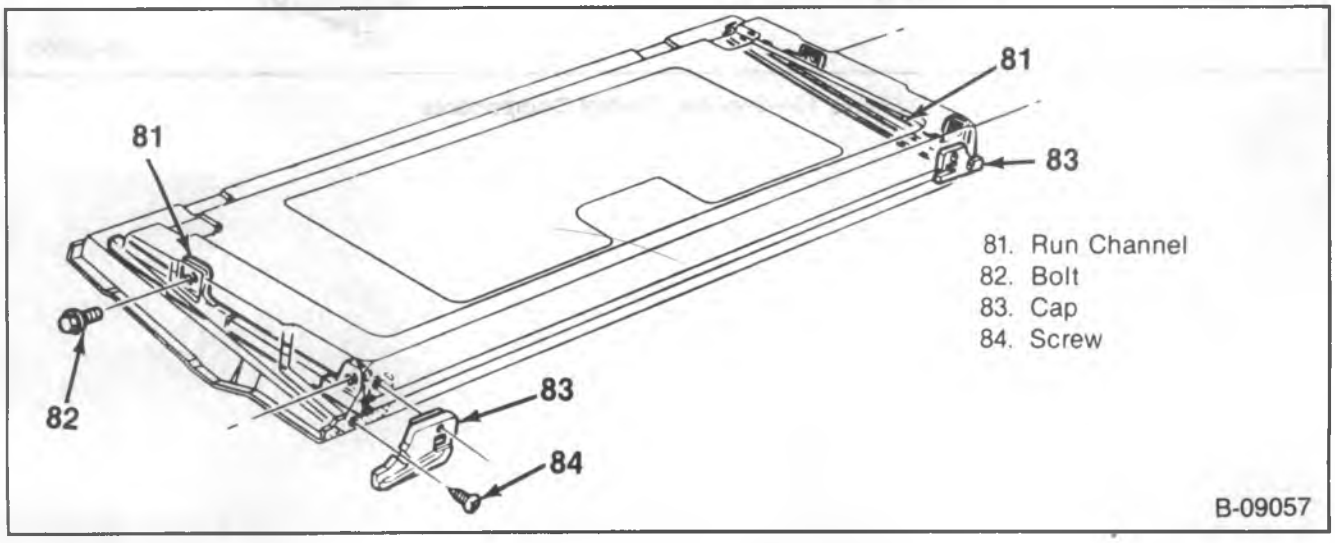

Figure 12—Run Channel Components

END GATE OUTSIDE CRANK REPLACEMENT

Remove or Disconnect (Figure 13)

1. Handle and control assembly. Refer to "Handle and Control Assembly Replacement."
2. Crank to end gate nuts (85).
3. Crank (88) and bezel (86) from the end gate.

Install or Connect (Figure 13)

1. Crank (88) and bezel (86) to the end gate.
2. Crank to end gate nuts (85).
3. Handle and control assembly. Refer to "Handle and Control Assembly Replacement."

WINDOW GLASS SEAL REPLACEMENT

Remove or Disconnect (Figure 14)

- Lower the window.
- Inner or outer seal (99 or 100) by prying the clips (101) from the end gate.

Install or Connect (Figure 14)

- Inner or outer seal (99 or 100) by pressing the clips (101) into the holes in the end gate.

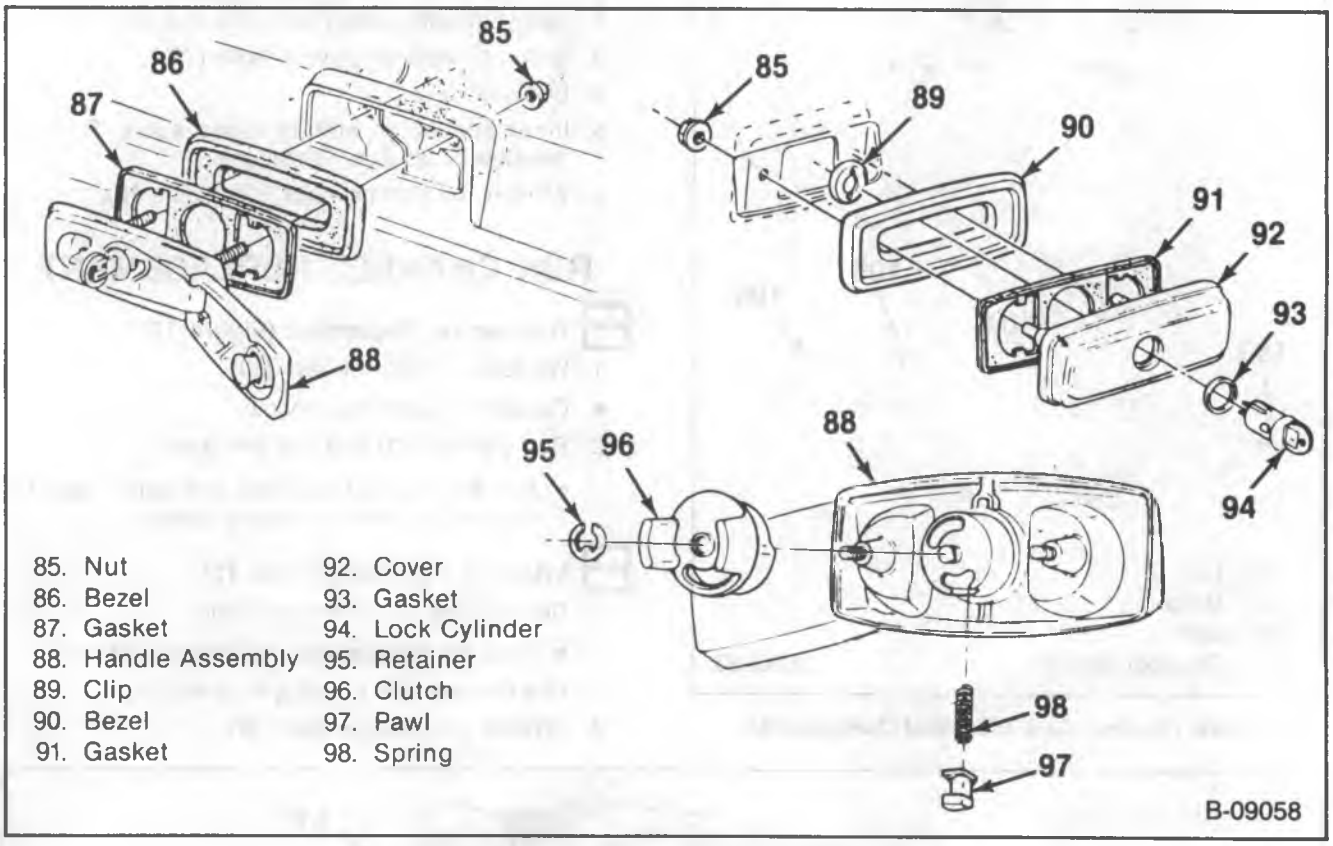

85. Nut
86. Bezel
87. Gasket
88. Handle Assembly
89. Clip
90. Bezel
91. Gasket
92. Cover
93. Gasket
94. Lock Cylinder
95. Retainer
96. Clutch
97. Pawl
98. Spring

Figure 13—Window Control Components

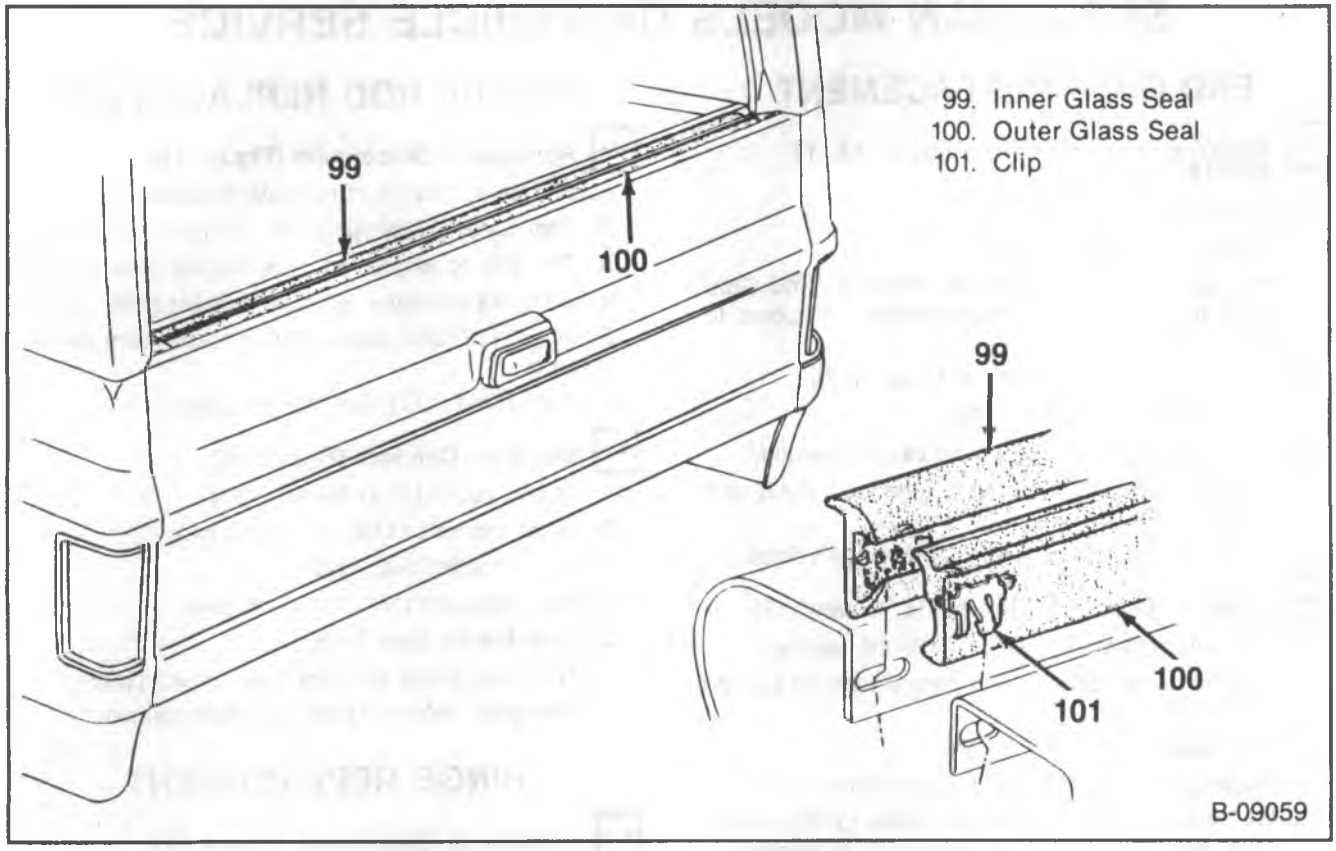

Figure 14—Window Glass Seals

WEATHERSTRIP REPLACEMENT

Remove or Disconnect (Figure 15)

- Weatherstrip (102) from the end gate using 3M Release Agent (or equivalent).

Install or Connect (Figure 15)

- Weatherstrip (102) to the end gate using 3M Weatherstrip Adhesive (or equivalent).

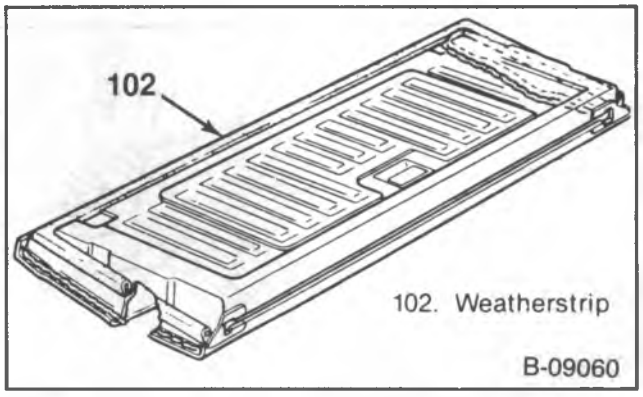

Figure 15—Weatherstrip

SUBURBAN MODELS ON-VEHICLE SERVICE

END GATE REPLACEMENT

Remove or Disconnect (Figures 16, 17 and 18)

- Lower the end gate.

1. Torque rod bracket (119).
2. Wiring harness (if equipped). Refer to "End Gate Trim and Cover Panel Replacement" for access to the wiring harness.
3. Hinge access cover (131) and seal (132).
4. End gate to hinge bolts (133).

- Lift the end gate to the almost closed position.

5. Support cable (136) to end gate bolt (142) and washer (143).
6. End gate with torque rod (117) from the vehicle.

Install or Connect (Figures 16, 17 and 18)

1. End gate with torque rod (117) to the vehicle.
2. Support cable (136) to end gate washer (143) and bolt (142).
3. End gate to hinge bolts (133).
4. Hinge cover seal (132) and access cover (131).
5. Wiring harness (if equipped). Refer to "End Gate Trim and Cover Panel Replacement" for access to the wiring harness.
6. Torque rod bracket (119).

TORQUE ROD REPLACEMENT

Remove or Disconnect (Figure 16)

1. End gate. Refer to "End Gate Replacement."
2. Trim panel (if equipped) and the cover panel.
3. End gate to torque rod inner bracket bolts (126).
4. End gate to torque rod outer bracket bolts (122).
5. Inner (118) and outer (119) brackets from the end gate.
6. Torque rod (117) from the end gate.

Install or Connect (Figure 16)

1. Torque rod (117) to the end gate.
2. Outer brackets (119) to the end gate.
3. Outer bracket bolts (122).
4. Inner bracket (118) to the end gate.
5. Inner bracket bolts (126).
6. The cover panel and trim panel (if equipped).
7. End gate. Refer to "End Gate Replacement."

HINGE REPLACEMENT

Remove or Disconnect (Figure 17)

- Lower the end gate.

1. Hinge to body bolts (134).

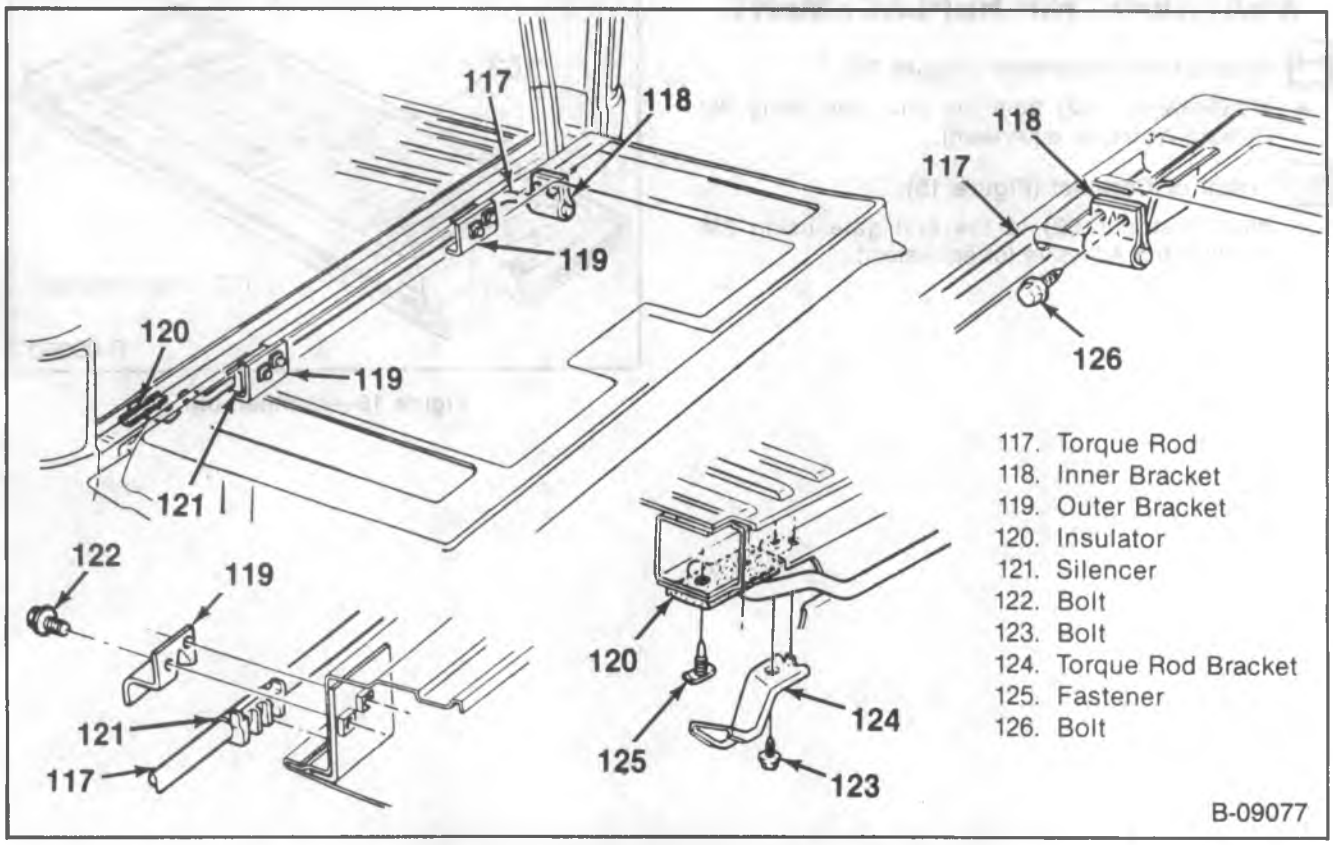

Figure 16—Torque Rod Components — Suburban

- Loosen the hinge to body bolts (134) on the opposite hinge.

2. Hinge cover screws (130), covers (131) and seals (132).
3. Hinge to end gate bolts (133).

- Pull the end gate away from the body several inches and remove the hinge from the body.
- Lift the end gate slightly to allow removal of the hinge from the end gate.

Install or Connect (Figure 17)

- Lift the end gate slightly and install the hinge to the end gate.
- Pull the end gate away from the body several inches, and insert the hinge into the body.

1. Hinge to end gate bolts (133).
2. Hinge to body bolts (134).

- Tighten the hinge to body bolts on the opposite hinge.

3. Hinge seals (132), covers (131) and cover screws (130).

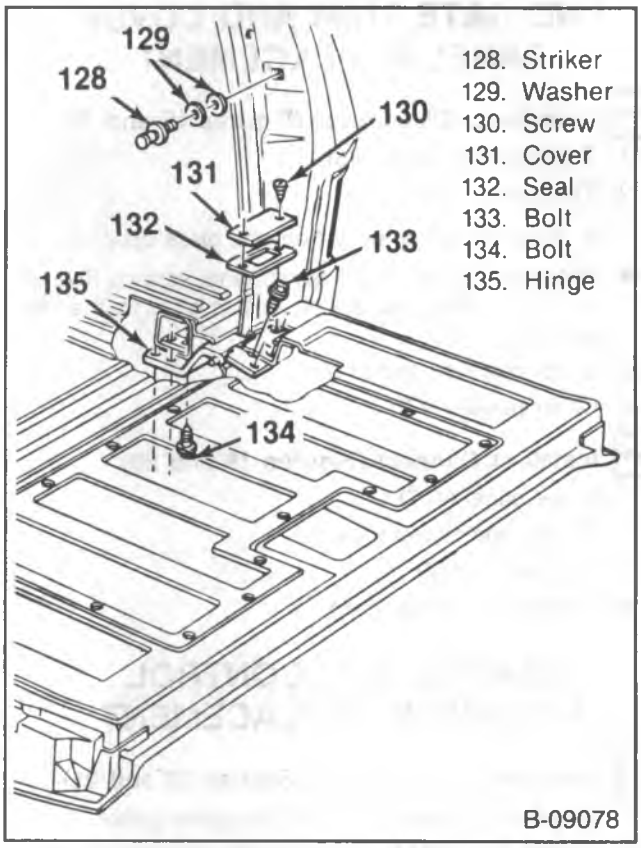

Figure 17—Hinge Components

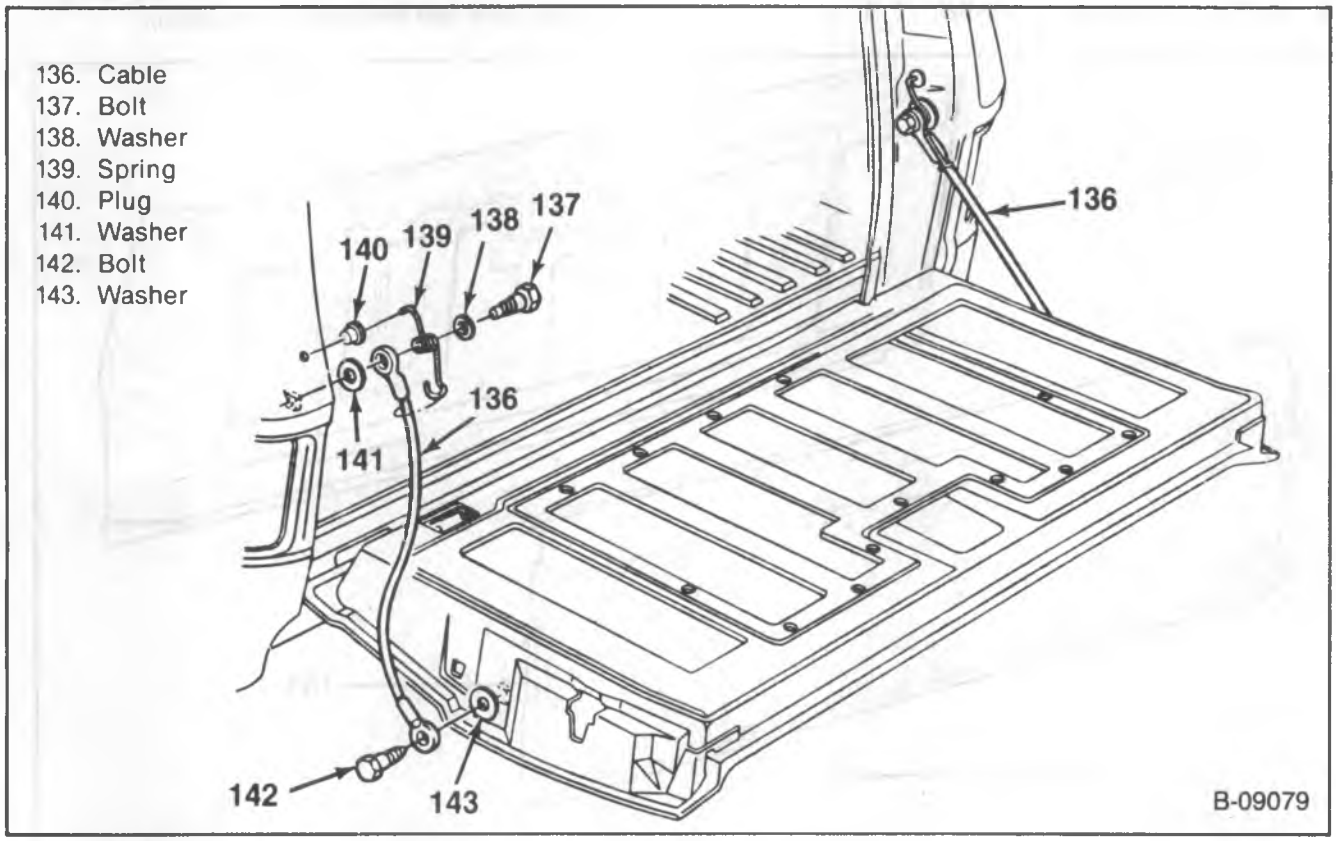

Figure 18—Cable Assembly Components

END GATE TRIM AND COVER PANEL REPLACEMENT

Remove or Disconnect (Figures 19 and 20)

1. Trim panel screws (145).
2. Trim panel (144).
   - Slide the panel away from the glass opening.
   - Note the position of the cover panel screws. Five of the holes in the cover panel are also holes for the trim panel.
3. Cover panel screws (146).
4. Cover panel (147).

Install or Connect (Figures 19 and 20)

1. Cover panel (147).
2. Cover panel screws (146).
3. Trim panel (144).
4. Trim panel screws (145).

HANDLE AND CONTROL ASSEMBLY REPLACEMENT

Remove or Disconnect (Figures 20 and 21)

1. Trim panel (if equipped) and the cover panel.
2. Control rod (154) from the control assembly (149).
3. Handle to end gate screws (161).
4. Handle (159) from the end gate.
5. Right and left latch rods (150) from the control assembly.
6. Control assembly to end gate bolts (148).
7. Control assembly (149) from the end gate.

Install or Connect (Figures 20 and 21)

1. Control assembly (149) to the end gate.
2. Control assembly to end gate bolts (148).
3. Right and left latch rods (150) from the control assembly.
4. Handle (159) to the end gate.
5. Handle to end gate screws (161).
6. Control rod (154) to the control assembly (149).
7. End gate cover and trim panel (if equipped).

LATCH REPLACEMENT

Remove or Disconnect (Figure 21)

1. Trim panel (if equipped) and the cover panel.
2. Right or left latch rods (150) from the control assembly.
3. Latch (153) to end gate screws (152).
4. Latch (153) from the end gate.

Install or Connect (Figure 21)

1. Latch (153) with rod to the end gate.
2. Latch (153) to end gate screws (152).
3. Right or left latch rod (150) to the control assembly.
4. Cover panel and trim panel (if equipped).

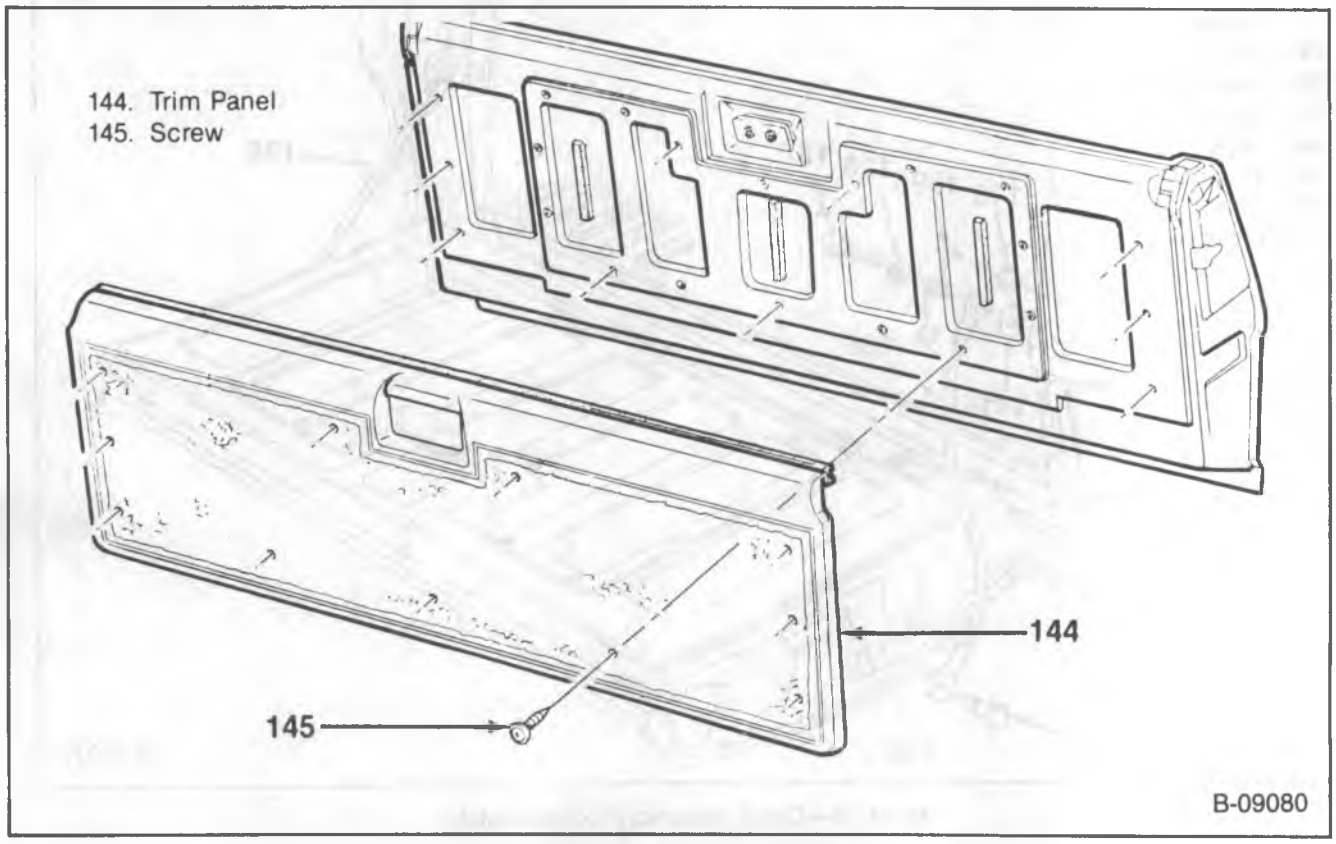

Figure 19—Trim Panel Components

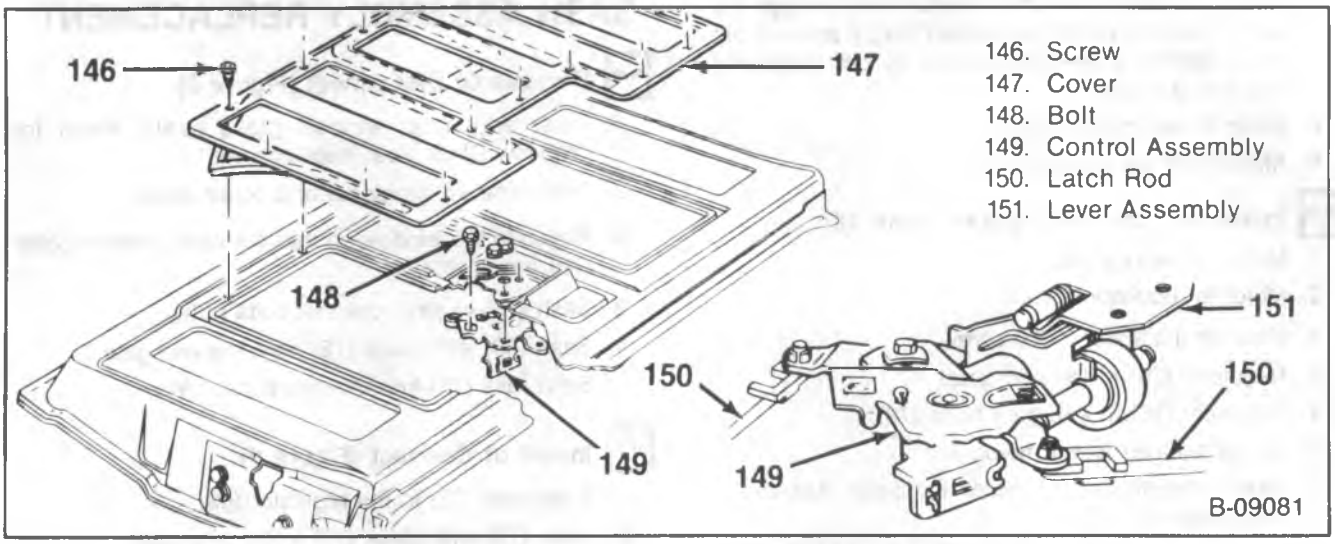

Figure 20—End Gate Cover and Assembly Components

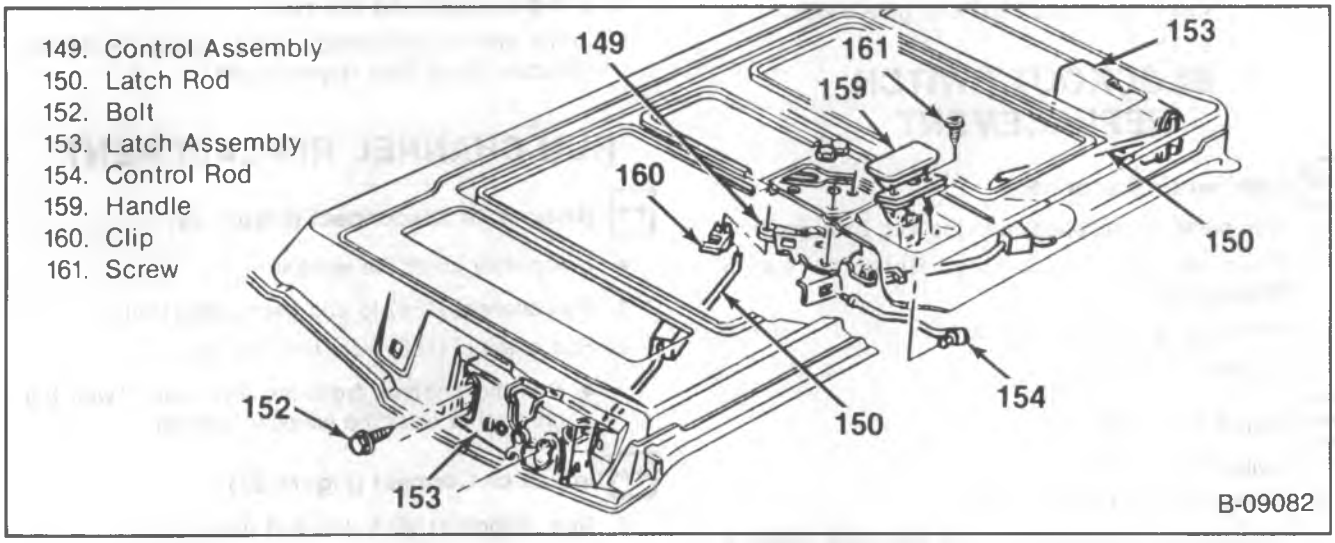

Figure 21—Handle and Latch Components

REGULATOR REPLACEMENT

MANUAL REGULATOR

Remove or Disconnect (Figure 9)

1. Trim panel (if equipped) and cover panel.
2. Control assembly. Refer to "Handle and Control Assembly Replacement."
3. Sash assembly (73). Refer to "Sash Assembly Replacement."
4. Regulator (69) to end gate bolts (70).
5. Regulator (69) from the end gate.

Install or Connect (Figure 9)

1. Regulator (69) to the end gate.
2. Regulator (69) to end gate bolts (70).
3. Sash assembly (73). Refer to "Sash Assembly Replacement."
4. Control assembly. Refer to "Handle and Control Assembly Replacement."
5. End gate cover and trim panel (if equipped).

POWER REGULATOR

Remove or Disconnect (Figures 9 and 10)

1. Trim panel (if equipped) and end gate cover.
2. Control assembly. Refer to "Handle and Control Assembly Replacement."
3. Sash assembly (73). Refer to "Sash Assembly Replacement."
4. Wiring harness from the motor.
5. Regulator (76) to end gate bolts (78).
6. Regulator (76) from the end gate.

CAUTION: Step 7 must be performed if the gear box is removed or disengaged from the regulator lift arms. The lift arms are under tension from the counterbalance spring, and can cause injury if the gear box is removed without locking the sector gear in place.

7. Drill a 3.1 mm (1/8-inch) diameter hole through the sector gear (103) and back plate (104). Install a sheet metal tapping screw into the hole to lock the sector gears in position.
8. Motor to regulator bolts.
9. Motor from the regulator.

Install or Connect (Figures 9 and 10)

1. Motor to the regulator.
2. Motor to regulator bolts.
   - Remove the sheet metal screw.
3. Regulator (76) to the end gate.
4. Regulator (76) to end gate bolts (78).
5. Wiring harness to the motor.
6. Sash assembly (73). Refer to "Sash Assembly Replacement."
7. Control assembly. Refer to "Handle and Control Assembly Replacement."
8. Trim panel (if equipped) and end gate cover.

BLOCKOUT SWITCH REPLACEMENT

Remove or Disconnect

1. Trim panel (if equipped) and the end gate cover.
2. The right latch assembly. Refer to "Latch Replacement."
3. Wiring harness from the switch.
4. Switch from the latch.

Install or Connect

1. Switch to the latch.
2. Wiring harness to the switch.
3. The right latch assembly to the end gate. Refer to "Latch Replacement."
4. End gate cover and trim panel (if equipped).

SASH ASSEMBLY REPLACEMENT

Remove or Disconnect (Figure 9)

1. Inner and outer window glass seals. Refer to "Window Glass Seal Replacement."
2. Trim panel (if equipped) and cover panel.
   - Regulate the window so that the sash channel bolts (72) are accessible.
3. Sash (73) to sash channel bolts (72).
4. Sash (73) with glass (75) from the end gate.
5. Sash rails (71) from the regulator (69).

Install or Connect (Figure 9)

1. Sash rails (71) to the regulator (69).
2. Sash (73) with glass (75) to the end gate.
3. Sash (73) to sash channel bolts (72).
4. End gate cover and trim panel.
5. Inner and outer window glass seals. Refer to "Window Glass Seal Replacement."

RUN CHANNEL REPLACEMENT

Remove or Disconnect (Figure 22)

- Completely lower the window.

1. Run channel (156) to end gate bolts (155).
2. Run channel (156) from the end gate.
   - Pull the channel from the end gate. Twist the channel to clear the window opening.

Install or Connect (Figure 22)

1. Run channel (156) to the end gate.
   - Twist the channel into the window opening.
2. Run channel (156) to end gate bolts (155).

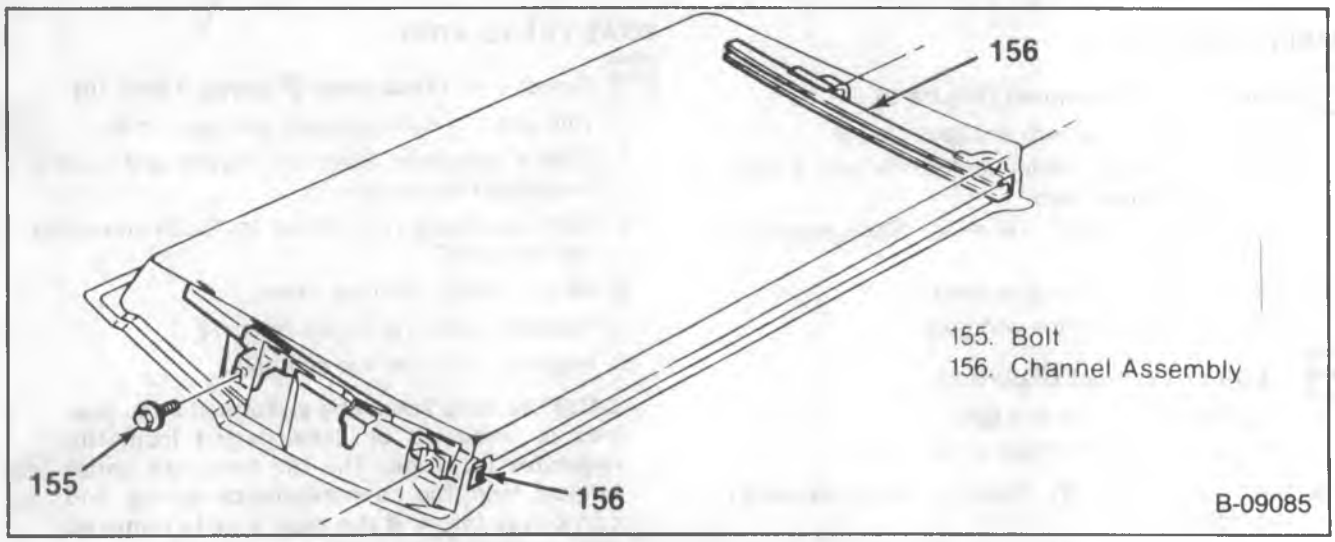

Figure 22—Run Channel Components

END GATE OUTSIDE CRANK REPLACEMENT

Remove or Disconnect (Figure 13)

1. Handle and control assembly. Refer to "Handle and Control Assembly Replacement."
2. Crank to end gate nuts (85).
3. Crank (88) and gasket (87) from the end gate.

Install or Connect (Figure 13)

1. Crank (88) and gasket (87) to the end gate.
2. Crank to end gate nuts (85).
3. Handle and control assembly. Refer to "Handle and Control Assembly Replacement."

WINDOW GLASS SEAL REPLACEMENT

Remove or Disconnect (Figure 14)

- Lower the window.

1. Trim panel (if equipped).
   - The inner seal is attached to the trim panel, when equipped, and replacement is not recommended.
2. Inner or outer seals by prying the clips from the end gate.

Install or Connect (Figure 14)

1. Inner or outer seal by pressing the clips into the holes in the end gate.
2. Trim panel (if equipped).

WEATHERSTRIP REPLACEMENT

Remove or Disconnect (Figure 23)

1. Weatherstrip screws (158).
2. Weatherstrip from the end gate using 3M Release Agent (or equivalent).

Install or Connect (Figure 23)

1. Weatherstrip to the end gate using 3M Weatherstrip Adhesive (or equivalent).
2. Weatherstrip screws (158).

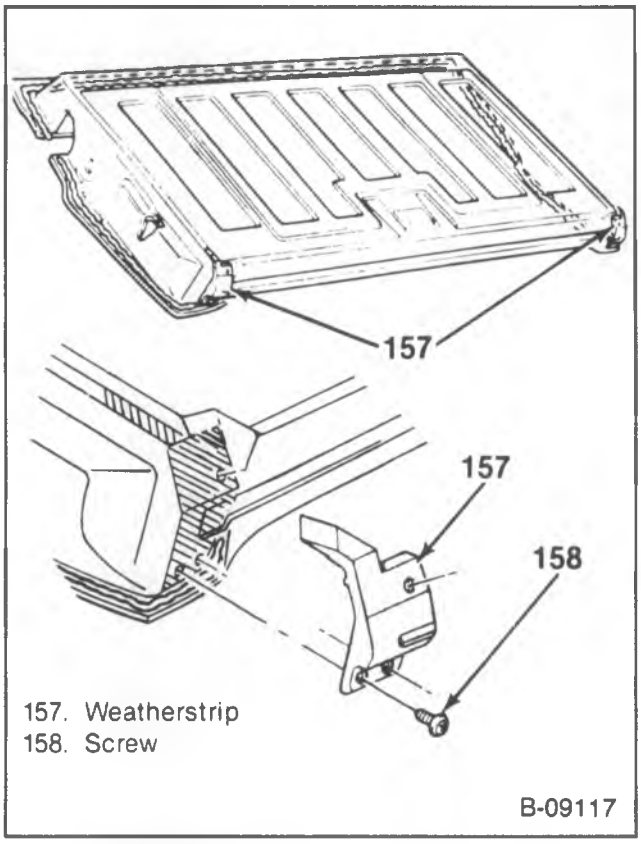

Figure 23—Weatherstrip Components

SECTION 10B

CAB AND BODY MAINTENANCE

CONTENTS

SUBJECT	PAGE
Description	10B-1
Diagnosis	10B-2
Cab Maintenance	10B-2
Interior Cleaning	10B-2
Exterior Cleaning	10B-4
On-Vehicle Service	10B-4
Cab Repairs	10B-4
Cab Alignment and Straightening	10B-5
Painting Sheet Metal	10B-5
Steering Wheel Refinishing	10B-5
Water Leaks	10B-6
Dust Leaks	10B-6

DESCRIPTION

The steel conventional cab is made of several large, one-piece steel panels which reduce the number of weld joints and improve the sealing and strength. Double wall construction is used for the cowl, roof panel, rocker panels and upper rear panel (figure 1).

The instrument panel is an all-steel, one-piece construction and is welded into place. The panel is designed with openings in the front to provide access to the vehicle components behind the panel. A dash pad covers the panel and access openings.

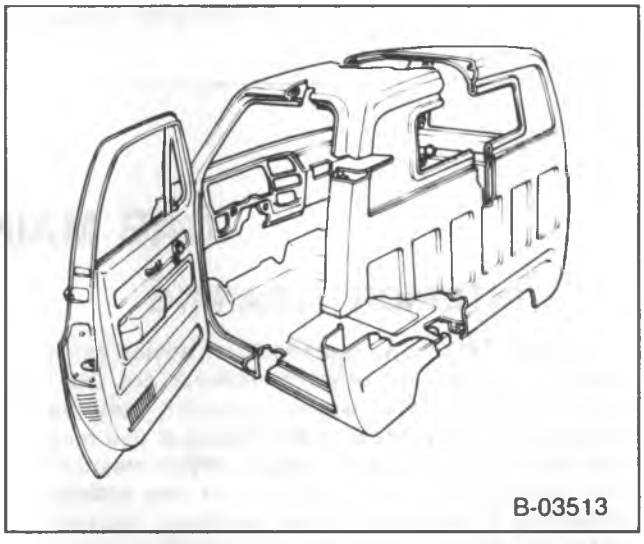

Figure 1 – Cab Construction

DIAGNOSIS

PROBLEM	POSSIBLE CAUSE	CORRECTION
Cab Is Not Level	1. Worn cushion(s) in one of the cab mounts. 2. Collapsed spacer(s). 3. Missing mount components. 4. Weak or broken suspension spring. 5. Twisted frame.	1. Replace the cushion(s). 2. Replace the spacer(s). 3. Replace the components. 4. Refer to FRONT SUSPENSION AND AXLE (SEC. 3C). 5. Refer to FRAME AND BUMPERS (SEC. 2A).
Water Leaks Into Cab	1. Leak between body panels. 2. Leaking windows. 3. Leaking doors.	1. Locate leak and repair. 2. Refer to GLASS (SEC. 10A3). 3. Refer to DOORS (SEC. 10A1).
Dust Leaks Into Cab	Leak between body panels.	Locate leak and repair.
Excessive Interior Noise Level	1. Loose or broken seat mounts or components. 2. Door out of alignment. 3. Loose or broken door components. 4. Leaking doors. 5. Leaking windows. 6. Loose instrument panel bezel.	1. Refer to SEATS (SEC. 10A2). 2. Refer to DOORS (SEC. 10A1). 3. Refer to DOORS (SEC. 10A1). 4. Refer to DOORS (SEC. 10A1). 5. Refer to GLASS (SEC. 10A3). 6. Refer to INSTRUMENT PANEL AND GAGES (SEC. 8C).

GMTB-4000-A

CAB MAINTENANCE

INTERIOR CLEANING

CAUTION: Follow the manufacturer advice when cleaning agents or other chemicals are used inside the vehicle. Some cleaners may be poisonous or flammable, and improper use may cause personal injury or damage. When cleaning the interior of the vehicle, do not use volatile cleaning solvents such as acetone, lacquer thinners, enamel reducers, nail polish removers or cleaning materials such as laundry soaps, bleaches or reducing agents, except as noted in the fabric cleaning advice on stain removal which follows. Never use carbon tetrachloride, gasoline, benzene, or naptha for any cleaning purpose.

Open all vehicle doors for ventilation when any cleaning agents or other chemicals are used inside the vehicle. Overexposure to some vapors, which is more likely to occur in small, unventilated spaces, may result in a health problem.

NOTICE: To avoid possible permanent discoloration of light colored seats, do not let materials with non-fast colors come in contact with seat trim materials until these materials are totally dry. This includes certain types of clothing, such as colored denims, corduroys, leathers and suedes.

Use the proper cleaning techniques and cleaners on the first cleaning to avoid water spots, spot rings, or setting of stains or soilage — all of which are more difficult to remove in a second cleaning.

Remove dust and loose dirt often that collect on interior fabrics with a vacuum cleaner or soft bristle brush. Wipe vinyl trim regularly with a clean damp cloth.

BASIC STEPS BEFORE CLEANING

1. Remove stains as quickly as possible before they set.
2. Use a clean cloth or sponge, and change to a clean area often. A soft brush may be used if stains persist.
3. Use solvent-type cleaners only in a well ventilated area. Do not saturate the stained area.
4. If a ring forms after spot cleaning, clean the entire area immediately.
5. Follow manufacturer instructions for all cleaning agents.

CLEANING VINYL TRIM

Ordinary soilage can be removed from vinyl with warm water and mild soap or oil soap, or an equivalent.

Apply a small amount of soap solution and let it soak for a few minutes to loosen dirt; then rub briskly with a clean, damp cloth to remove dirt and traces of soap. This may be repeated several times, if needed.

Soilage such as tars, asphalts, or shoe polish, will stain if left on trim. Wipe off these compounds as quickly as possible and clean the area with a clean cloth dampened with GM Vinyl/Leather Cleaner or equivalent.

Wipe vinyl trim with soft clean cloths to dry and restore sheen and luster.

SPOT CLEANING FABRIC TRIM

Before trying to remove a spot or stain from fabric, try to determine the type and age of the spot or stain. Some spots or stains can be removed with water or a mild soap solution. Remove spots or stains as soon as possible.

Some type of stains or soilage, such as lipstick, inks and grease, are very difficult (sometime impossible) to remove completely. When cleaning this type of stain or soilage, do not enlarge the soiled area. Use GM Fabric Cleaner (Solvent Type) or equivalent for spot cleaning grease, oil, or fat stains.

Gently scrape excess stain from the trim material with a clean, dull knife or scraper. Use very little cleaner, light pressure, and clean cloths, preferably cheesecloth. Start cleaning at the outside of the stain and feather towards the center. Keep changing to a clean section of the cloth.

After the stain has been removed, immediately dry the area with an air hose, heater dryer, or heat lamp to help prevent a cleaning ring. Use caution with heat dryer or lamp to help prevent fabric damage.

If a ring forms, immediately repeat the cleaning operation over a slightly larger area with emphasis on feathering towards its center. If a ring still remains, mask off surrounding trim sections and clean the entire area with GM Multi-Purpose Powdered Cleaner or equivalent as explained later in this section.

GENERAL CLEANING OF FABRIC TRIM

Use GM Multi-Purpose Powdered Cleaner or equivalent for this type of cleaning and for cleaning panel sections where small cleaning rings may be left from spot cleaning.

Vacuum and brush the area to remove any loose dirt and mask surrounding trim along stitch or welt lines.

Clean a whole trim panel or section. Mix cleaner following the directions on the container label. Mix in proportion for smaller quantities. Use suds on a clean sponge. Do not saturate the material or rub it harshly. Remove suds with a sponge and rinse with a clean wet sponge. Wipe off remaining residue with a slightly damp absorbent towel or cloth. Dry the material with an air hose. A heat dryer or heat lamp may be used. Use care with a heat dryer or lamp to help prevent damage.

REMOVAL OF SPECIFIC STAINS

Grease Or Oily Stains

These include grease, oil, butter, margarine, shoe polish, coffee with cream, chewing gum, cosmetic creams, vegetable oils, wax crayon, tar and asphalts.

- Carefully scrape off excess stain, then use GM Fabric Cleaner or equivalent as explained earlier in this section.
- Shoe polish, wax crayons, tar and asphalts will stain if left on trim; they should be removed as soon as possible. Use care as cleaner will dissolve the stains and may cause them to bleed.

Non-Greasy Stains

These include catsup, black coffee, egg, fruit, fruit juice, milk, soft drinks, wine, vomit, blood and urine.

- Carefully scrape off excess stain, then sponge the stain with cool water.
- If a stain remains, use GM Multi-Purpose Powdered Cleaner or equivalent as explained earlier in this section.
- If an odor lingers after cleaning vomit or urine, treat the area with a water/baking soda solution of 5 milliliters (1 teaspoon) of baking soda to 250 milliliters (1 cup) of lukewarm water.
- Finally, if needed, clean lightly with GM Fabric Cleaner (Solvent Type) or equivalent.

Combination Stains

Includes candy, ice cream, mayonnaise, chili sauce and unknown stains.

- Carefully scrape off excess stain. Clean with cool water and allow to dry.
- If a stain remains, clean it with GM Fabric Cleaner (Solvent Type) or equivalent.

SEAT BELT CARE

CAUTION: Do not bleach or dye seat belts since this may severely weaken them. Damaged seat belts are a safety hazard.

- Keep belts clean and dry.
- Clean lap belts only with mild soap and lukewarm water.

GLASS SURFACES

Glass surfaces should be cleaned on a regular basis. Use GM Glass Cleaner or equivalent to remove normal tobacco smoke and dust films.

Do not use abrasive cleaners on any vehicle glass. Abrasive cleaners will scratch glass.

EXTERIOR CLEANING

CAUTION: Follow the manufacturer advice when cleaning agents or other chemicals are used on the exterior of the vehicle. Some cleaners may be poisonous or flammable, and improper use may cause personal injury or damage. When cleaning the exterior of the vehicle, do not use volatile cleaning solvents such as: acetone, lacquer thinners, enamel reducers, nail polish removers; or cleaning materials such as laundry soaps, bleaches or reducing agents. Never use carbon tetrachloride, gasoline, benzene, or naptha for any cleaning purpose.

WASHING AND WAXING

Wash the vehicle in lukewarm or cold water. Do not use hot water or wash the vehicle in the direct rays of the sun. Do not use strong soap or chemical detergents. All cleaning agents should be promptly flushed from the surface and not allowed to dry on the finish.

Painted body surfaces and chrome plating should be protected by a coating of wax. Any good body wax can be used for both painted and chrome surfaces. Wax should be applied immediately after the vehicle has been cleaned. Periods between applications should be short enough to assure continuous protection of the finish.

FOREIGN MATERIAL DEPOSITS

Calcium chloride and other salts, ice melting agents, road oil and tar, tree sap, bird droppings, chemicals from industrial chimneys, and other foreign matter may damage vehicle finishes if left on painted surfaces.

Prompt washings may not completely remove all of these deposits. Other cleaners may be needed. Use chemical cleaners that are safe for use on painted surfaces.

CLEANING THE OUTSIDE OF WINDSHIELD

If the windshield is not clear after using the windshield washer, or if the wiper blade chatters when running, wax or other material may be on the blade or windshield.

Clean the outside of the windshield with a non abrasive cleaner. The windshield is clean if beads do not form when rinsing with water.

Clean the blade by wiping with a cloth soaked in a solution of one-half water and one-half GM Optikleen or equivalent. A solution of one-half water and one-half methanol alcohol may also be used. Rinse the blade with water.

CLEANING BRIGHT METAL PARTS

Clean bright metal parts regularly. Washing with water is all that is usually needed. Use GM Chrome Polish or equivalent on chrome or stainless steel trim, if necessary.

Use special care with aluminum trim. Do not use auto or chrome polish, steam or caustic soap to clean aluminum. A coating of wax, rubbed to a high polish, is recommended for all bright metal parts.

WEATHERSTRIP LUBRICATION

Use silicone grease to lengthen weatherstrip life to help sealing and to help eliminate squeaks. Lubricate all weatherstrips with GM silicone grease or equivalent. Use a clean cloth to apply a thin film of silicone grease.

ON-VEHICLE SERVICE

CAB REPAIRS

Cab repairs may require reinforcements. Before reinforcing any part of the vehicle, find the cause of the failure. Cab panels and framing are integral, therefore, driving stresses and strains are transmitted throughout the cab. Reinforcing a point of an apparent failure without correcting the underlying problem may transfer the stress to other parts of the cab, causing new failures to develop.

To maintain proper body strength, replace the damaged panels or other structural parts with new ones from the factory.

The use of heat when straightening structural parts of body is not recommended. Heat will affect the structural characteristics of the material. Any parts bent or buckled enough to show strain cracks after straightening should be replaced or properly reinforced.

Any parts used that are not steel, but will contact a steel part, including bolts, washers, nuts or rivets, should be coated with paint or plating to prevent corrosion between the dissimilar metals.

All welding should be done by American Welding Society (AWS) standards.

When welding Conventional Cab steel panels use TIG, MIG or stick welding. Resistance welding equipment, if available, also can be used. Always use good welding practices as recommended by the AWS.

When welding a cut member, completely fill or weld the cut. Filler material should be of the same material as the parts being welded. Use any of the E70S-1 through E70S-6 electrodes.

CAB PANEL REPLACEMENT

To maintain proper body strength, replace damaged structural members with GM parts or equivalent.

Cab panels can be replaced by removing the damaged part and welding the new piece in. For proper alignment of the panel, clamp it in position before welding.

Any window opening should be spot welded since it provides a sealing surface.

When replacing a rear panel or roof panel, give special attention to the proper sealing of joints with sealing and caulking compounds.

CAB SILL REPLACEMENT

Remove the damaged sill(s) and smooth the area before installing replacement part(s). The recommended method of installation is plug welding or chain welding.

CAB PANEL REPAIR

Paint is quickly scuffed off sharp dents leaving metal exposed to rusting and corrosion, therefore damaged panels should be repaired as soon as possible. Repair

damaged panels by forcing outward in the direction opposite to the force which caused the damage. In this way, metal strains, set up when the damaged occurred, are relieved.

The importance of proper metal finishing to produce a smooth surface should not be underestimated. The application of a hammer directly to the panel tends to stretch the metal and causes unnecessary work. When possible, use a spoon under the hammer when bumping a panel.

HOLE AND CRACK REPAIR

1. Holes of less than 6 mm (1/4-inch) diameter in sheet metal panels can be welded and metal finished without backing:
   a. Degrease and mechanically clean the area on the panel(s) with emery or abrasive wheel.
   b. Weld up the hole using filler rod and any of the E70S-1 through E70S-6 electrodes.
   c. If the panel surface is visible, metal finish the area.
2. Holes greater than 6 mm (1/4-inch) in diameter but less than 51 mm (2-inches) in diameter can be welded by backing the hole with the same material as the parent material.
   a. Degrease and mechanically clean the area on the panels with emery or abrasive wheel.
   b. Weld in a backing plate of the same material as the parent material. Minimum edge overlap at the holes should be 3 mm (1/8-inch). Use filler rod.
   c. If the panel surface is visible, metal finish the area.
3. Cracks in the sheet metal panels that are less than 76 mm (3-inches) long and 3 mm (1/8-inch) wide can be welded and metal finished without backing.
   a. Degrease and mechanically clean the panel(s) with emery or abrasive wheel.
   b. Establish the start of the crack with the dye-penetrant test.
   c. End the crack by drilling a hole in the root of the crack. The diameter of the hole should be at least one and-a-half times the metal thickness.
   d. Weld the crack using filler rod and any of the E70S-1 through E70S-6 electrodes.
   e. If the panel is visible, metal finish the area.

CAB ALIGNMENT AND STRAIGHTENING

Before repairing a damaged cab, the chassis frame must be checked and, if necessary, aligned. Refer to FRAME AND BUMPERS (SEC. 2A).

Never attempt to straighten the cab unless it is firmly attached to the chassis. The inner paneling of the cab should be straightened first. Use a push-pull hydraulic jack together with an extension and adapters for this type of repair. Cross-check with an adjustable tram bar as work progresses.

After straightening, it is important that strains set up in the framing be relieved or normalized. Normalizing consists of heating the areas of greatest tension with a torch. Hold the torch about 50 mm (2-inches) from the metal and move it over an area of 75 to 100 mm (3 to 4-inches) until the metal barely begins to turn red. Cooling must be slow to avoid changing the characteristics of the metal. Apply slight heat with a torch, if necessary, to slow cooling.

PAINTING SHEET METAL

REPAINTING

1. Remove all corrosion, grease, and other foreign matter. Use phosphoric base metal conditioners to prepare the steel for painting. These materials vary in method of application for use. Use them only as directed by the manufacturer. Solvent cleaning, pressure steam cleaning, wire brushing, and hand sanding methods are recommended.
2. Use organic or alkaline solvents to completely remove the old paint. If alkaline removers are used, wash off all traces of alkali before primer is applied. If the old primer is very difficult to remove, and if there is no evidence of metal corrosion, the old primer may be left in place.
3. Use a good oxide primer obtained from a reputable manufacturer. Apply primer, preferably by spraying and allow it to dry.
4. Apply the finish coats.
   a. For the understructure, or other parts not requiring color, apply two coats of a good air-drying black or other automotive lacquer.
   b. To exposed body parts, apply surfacers and paint in accordance with standard practice.

PAINTING NEW PARTS

Thoroughly clean and paint new replacement parts as outlined previously under "Repainting." Also, be sure to clean and coat hidden surfaces of panels with one heavy coat of sheet metal deadener.

STEERING WHEEL REFINISHING

Plastic steering wheels that are not textured or imprinted with a grain can be refinished if they become nicked or scratched. The following procedure is intended only for the repair of minor damage. Do not attempt to refinish any area of a steering wheel that has a grained surface molded into it.

Refinishing may be accomplished without wheel removal in most cases. It is suggested, however, that the procedure be tried on a discarded wheel before it is done to the wheel of the vehicle.

Any nicks, scratches or other blemishes must be worked out of the wheel to match the contour of the surrounding area. Normally, solvent solution, a cheesecloth, and sandpaper are enough to do the job. Steel wool and a file may prove useful.

MATERIALS

1. Solution of 50 percent methylethylketone (MEK) and 50 percent alcohol or a solution of acetone.
2. Bleached, cotton cheesecloth or white linen.
3. A soft, clean dry cloth.
4. 300 to 400 fine sandpaper.
5. Rubber gloves.
6. Fine steel wool, grade 0000 to 000.
7. A small, fine metal file.

REFINISHING PROCEDURE (Figure 2)

CAUTION: Be sure procedures are performed in a well ventilated area away from any fire or flame source. Avoid prolonged breathing of solution fumes. When using MEK wear rubber gloves. The solution can be harmful to the skin.

1. Cover vinyl, rubber, or other plastic parts of the vehicle to protect from the solvent.
2. Soak the cheesecloth or linen in the solvent, wring out the excess.
3. Rub along the damaged area of the wheel with a quick continuous motion.
   a. Pressure is important but rubbing too hard will leave a rough surface from the cloth. It is best to make several passes using light pressure.
   b. Lift the cloth from the wheel when stopping. Stopping first and then lifting the cloth from the wheel will cause an imprint of the cloth to be left in the plastic.
   c. Follow the lines and contour of the wheel as shown in figure 2.
   d. Soak and wring out the cloth often to make sure that it is wet but not dripping.
   e. Keep folding the cloth so that the area in contact with the wheel stays clean; it will have a tendency to pick up color from the wheel.
4. Let the wheel dry for several minutes.
5. Buff the wheel lightly with a soft, clean, dry cloth.

   Once the wheel has been buffed, do not touch or lay anything against the refinished area for at least 30 minutes. The plastic is soft and can be easily marred.

   After the wheel has dried thoroughly, white streaks may appear on the refinished area. These can be removed by rubbing with a clean, dry cloth.

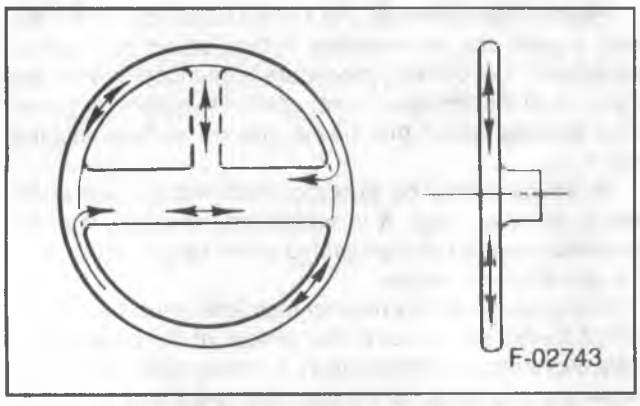

Figure 2—Steering Wheel Grain

WATER LEAKS

If water has leaked into the cab, test for the leakage points. Spray water under pressure against the cab in the general area where the leak is believed to be located. Have an assistant inside the cab locate and mark the point(s) where any water appears.

Water which appears at a certain place inside the cab may actually be entering the cab from another point. It may be necessary to remove the floor mat, insulation, dash pad, instrument carrier, etc. Backtrack the path of water to point of entry. If it is still not possible to locate the point of entry, do the following:

1. Close all windows and vents.
2. Turn the fan lever to the "HI" position.
3. Place the air lever in position to use outside air.
4. Close the doors.
5. Run a small stream of water over the suspected area of leakage.
6. Check for pressure bubbles that indicate air is escaping from the cab.
7. Turn off the air conditioning or heater blower.

CORRECTIVE MEASURES

If the leak is between body panels, use an air drying body sealing compound.

If the leak is around a door, it may be because the door is not properly aligned. Align the door. Refer to DOORS (SEC. 10A1). If the door is contacting the weatherstrip correctly, make sure the weatherstrip is not damaged and is properly seated on the opening flange. If the weatherstrip is not properly seated, rubber cement can be used to hold it in place. If the weatherstrip is damaged, replace it.

If the leak is around a window held by a weatherstrip, completely dry the area and apply rubber cement between the glass and the weatherstrip, and the body and weatherstrip. If leaks continue, remove the window and check the weatherstrip. If the weatherstrip is damaged, it should be replaced. Check the flange that holds the weatherstrip for any nicks or burrs that may have caused the damage.

DUST LEAKS

Dust will leak into a cab where water will not, particularly in the lower portion of the cab. Forward motion of the vehicle can create a slight vacuum which pulls air and dust into the cab.

To determine the location of dust leaks:

1. Remove the mats and insulation from the floor and toe panel.
2. Drive the vehicle on a dusty road.
3. Examine the interior of the cab. Dust in the shape of a small cone or slit will usually be found at the point of leakage.
4. Mark the points of leakage.
5. With cab in a dark area, shine bright lights on the underside of floor and cowl, and have an assistant check inside the cab for any points where the light shines through. Mark the leakage points. Check weld joints and cab mounting areas.

   Sealing of leaks should be done with an air drying body sealing compound.

A

A/C Periodic Maintenance and Servicing ... 1B-4
A/C Rear Interior Roof Mounted System — Suburban ... 1B-46
A/C Rear Interior Roof Mounted Systems (Suburban) ... 1B-2
A/C System (CCOT) ... 1B-2
A/C System — P Trucks ... 1B-52
A/C System — R/V Series ... 1B-34
A/C System Components ... 1B-2
A/C System Components, Temperature and Pressure Relationships ... 1B-6
A/C System Operation — R/V ... 1B-4
A/C System Performance Test ... 1B-9
Accelerator Control Cable ... 6C-16
Accelerator Controls ... 6C-16
Accelerator Pedal ... 6C-16
Accessory Noise ... 9-34
Accumulator Assembly (4L60 Auto Trans.) ... 7A1-75
Accumulator Assembly (A/C) ... 1B-29
Accumulator Housing Assembly (4L80E Auto. Trans.) ... 7A2-79
Accumulator Replacement (A/C) ... 1B-35
Actuator — Plenum Side Vent Replacement (A/C) ... 1B-38
Actuator Replacement (Automatic Parking Brake) ... 5C-12
Advance Pin Hole Plug Seal Replacement (Diesel Fuel Injection) ... 6C2-21
Advance Piston ... 6C2-3
Advance Piston Diagnosis ... 6C2-3
Advance Piston Replacement (Diesel Fuel Injection) ... 6C2-22
Advance Piston Seals Replacement (Diesel Fuel Injection) ... 6C2-22
Air Cleaner ... 6C-2
Air Conditioning Electrical System ... 8A-19
Air Cylinder Inspection (Independent Front Suspension) ... 3C-19
Air Filter Element Replacement ... 6C-2
Air Inlet and Blower Assembly (R/V) ... 1A-2
Air Valve Replacement, Door (R/V Model Side Front Doors) ... 10A-14
ALDL Connector (Diesel Emissions) ... 6E2-6
ALDL Connector (Electronic Transmission Control) ... 7A4-2
Aluminum Radiator Core ... 6B2-18
Aluminum Radiator Drain Cock ... 6B2-21
Aluminum Radiator Oil Cooler and Gaskets ... 6B2-20
Aluminum Radiator Service ... 6B2-16
Aluminum Radiator Tanks and Gaskets ... 6B2-19
Aluminum Wheel Porosity Repair ... 3E-10
Aluminum Wheel Refinishing ... 3E-10
Antenna Replacement ... 9-36
Anti-Chip Coating Replacement ... 2B-22
Anti-Corrosion Treatment ... 2B-21
Anticorrosion Treatment ... 0A-19
Assembly Line Diagnostic Link ... 7A4-2
Automatic Locking Hub Service (Front Driving Axle) ... 4C-5
Automatic Parking Brake Actuator Replacement ... 5C-12
Automatic Parking Brake Control Rod Adjustment ... 5C-12
Automatic Parking Brake Control Valve Replacement ... 5C-11
Automatic Parking Brake Relay Valve Replacement ... 5C-11
Auxiliary Battery (Gas Engine Models) ... 6D1-4
Auxiliary Blower Switch Replacement ... 1A-14
Auxiliary Cooling Fan Replacement ... 6B1-20
Auxiliary Valve Body (4L60 Auto Trans.) ... 7A1-68
Axle Joint Component Replacement (Front Driving Axle) ... 4C-4
Axle Shaft Replacement (12-Inch Ring Gear) ... 4B1-21
Axle Shaft Replacement (9 ¾ and 10 ½-Inch Ring Gear) ... 4B1-15
Axle Shaft Replacement (Front Driving Axle) ... 4C-2
Axle Shaft Stud Runout ... 0C-9
Axle Shaft, Oil Seal and Bearing Replacement (8 ½ and 9 ½-Inch Ring Gear) ... 4B1-9
Axle Vent Replacement (12-Inch Ring Gear) ... 4B1-21
Axle, Front Diagnosis ... 3C-3
Axle, Front Driving ... 4C-3

B

Backup Lamp System ... 8B-5
Backup Lamp System (Diagnosis) ... 8B-23
Backup Switch Replacement ... 8B-37
Balancing Tire and Wheel ... 0C-6
Balancing, Wheels and Tires ... 3E-11
Ball Joint Replacement (Independent Front Suspension) ... 3C-19
Ball Joint Replacement (V1 & V2 Models Only) (I-Beam (RPO FS3) Front Suspension) ... 3C-53
Basic Electric Circuits (Electronic Transmission Control) ... 7A4-2
Basic Electrical Circuit Diagnosis ... 8A-4
Basic Electrical Circuit Maintenance and Repair ... 8A-5
Basic Electrical Circuit Malfunctions ... 8A-3
Basic Electrical Circuits ... 8A-2
Basic Electrical Diagnostic Tools ... 8A-4
Battery ... 6D1-2
Battery Cables ... 6D1-8
Battery Charging Procedures ... 6D1-6
Battery Diagnosis ... 6D1-4
Battery Hydrometer Test ... 6D1-4
Battery Load Test ... 6D1-4
Battery Replacement ... 6D1-8
Battery Storage ... 6D1-3
Battery Visual Inspection ... 6D1-4
Battery, Auxiliary (Gas Engines) ... 6D1-4
Battery, Diesel ... 6D1-3
Battery, Emergency Starting Procedures ... 6D1-6
Bearing Adjustment (12-Inch Ring Gear) ... 4B1-22
Bearing Adjustment (I-Beam (RPO FS3) Front Suspension) ... 3C-46
Bearing, Rear Axle ... 4B1-9

Below Eyeline Outside Rear View Mirror Replacement (R/V Model Side Front Doors) ... 10A-13
Belt Adjustment (Generator) ... 6D3-19
Bench Bleeding ... 5A-21
Bench Seatback and Catch Replacement ... 10A2-5
Blockout Switch Replacement (Suburban Models) ... 10A5-16
Blower Assembly Replacement ... 1B-35
Blower Assembly Replacement (Diesel Engine) ... 1B-36
Blower and Air Inlet Assembly ... 1A-2
Blower Motor Assembly Replacement ... 1B-46
Blower Motor Relay Replacement ... 1B-43
Blower Motor Replacement ... 1A-8
Blower Motor Replacement, Auxiliary ... 1A-14
Blower Motor Resistor Replacement ... 1B-43
Blower Motor Switch Replacement ... 1B-51
Blower Switch Replacement ... 1B-41
Body Moldings ... 2B-21
Brake Adjustment (Drum) ... 5A2-13
Brake Backing Plate Replacement (8 ½ and 9 ½-Inch Ring Gear) ... 4B1-12
Brake Drum Servicing ... 5A2-13
Brake Fluid ... 5A-2
Brake Fluid Leaks ... 5A-5
Brake Fluid, Substandard or Contaminated ... 5A-2
Brake Hoses ... 5A-8
Brake Hydraulic System, Bleeding ... 5A-5
Brake Hydraulic System, Flushing ... 5A-8
Brake Lining Inspection (Disc) ... 5A2-1
Brake Lining Replacement (Disc) ... 5A2-2
Brake Lining Replacement (Drum) ... 5A2-11
Brake Pedal Assembly ... 5A-15
Brake Pedal Replacement ... 5A-15
Brake Pedal Rod Replacement ... 5A-19
Brake Pipes ... 5A-8
Brake Proportioning Valve, Height-Sensing ... 5A-13
Brake Signal (Electronic Transmission Control) ... 7A4-9
Brakes, Road Testing ... 5A-2
Bumper License Plate Bracket Replacement, Rear (R/V) ... 2A-12
Bumper Replacement, Front (R/V) ... 2A-6
Bumper Replacement, Rear (Bonus Cab and Crew Cab) ... 2A-10
Bumper Replacement, Rear (Utility Vehicle and Suburban) ... 2A-8
Bumper Replacement, Rear Step (R/V) ... 2A-12
Bumper Wedge Replacement (R/V Model Rear Doors) ... 10A-26
Bushing Replacement (Rear Suspension) ... 3D-8

C

CAL-PAK (Electronic Transmission Control) ... 7A4-6
Cab Alignment ... 10B-5
Cab and Body Diagnosis ... 10B-2
Cab Maintenance ... 10B-2
Cab Mount Replacement ... 2B-21
Cab Repairs ... 10B-4
Caliper (Rebuilding) ... 5A2-8
Caliper Replacement ... 5A2-7
Camshaft Lobe Lift, Measuring (4.3L V6) ... 6A3-17
Camshaft Lobe Lift, Measuring (5.0L and 5.7L V8) ... 6A4-16
Camshaft Replacement (4.3L V6) ... 6A3-17
Camshaft Replacement (5.0L and 5.7L V8) ... 6A4-16
Camshaft Replacement (6.2L Diesel) ... 6A6-13
Camshaft Replacement (7.4L V8) ... 6A5-13
Cargo and Underhood Lamp Circuits (Diagnosis) ... 8B-26
Cargo Lamp Replacement ... 8B-40
Cargo Lamp Switch Replacement ... 8B-41
Carpet Replacement (Bonus Cab) ... 10A4-2
Carpet Replacement (Suburban) ... 10A4-11
Carpet Replacement (Utility Vehicle) ... 10A4-7
Catalytic Converter Replacement ... 6F-13
CDR Valve Specification ... 6E2-4
CDR Valve Test ... 6E2-2
Center Bearing ... 4A-1
Center Bearing Replacement ... 4A-13
Center Seat Belt Replacement ... 10A2-13
Center Seat Bottom Latch Replacement ... 10A2-12
Center Seat Bottom Replacement ... 10A2-8
Center Seat Bottom Support Bracket Replacement ... 10A2-8
Center Seatback Bottom Striker Replacement ... 10A2-11
Center Seatback Bumper and Striker Replacement ... 10A2-11
Center Seatback Latch Replacement ... 10A2-12
Center Seatback Replacement ... 10A2-8
Certification Label ... 0A-3
Changing Fluid and Filter (4L80E Auto. Trans.) ... 7A2-71
Charging Station Method (A/C) ... 1B-28
Charging the System (A/C) ... 1B-29
Check Strap Replacement (R/V Model Rear Doors) ... 10A-30
Checking Ball Joint Turning Effort (I-Beam (RPO FS3) Front Suspension) ... 3C-53
Checking Wheel and Tire Runout ... 3E-4
Chemical Stability ... 1B-8
Circuit Breakers ... 8B-54
Circuit Check (Diesel Emissions) ... 6E2-59
Circuit Maintenance and Repair (RWAL) ... 5A3-24
Circuit Operation ... 6D3-2
Circuit Operation (Diesel Emissions) ... 6E2-58
Cleaning Exterior ... 10B-4
Cleaning Interior ... 10B-2
Cleanliness and Care Statement ... 6A-1
Clearing Codes (Diesel Emissions) ... 6E2-8
Clearing Codes (Electronic Transmission Control) ... 7A4-4
Clutch Application Chart (4L60 Auto Trans.) ... 7A1-8
Clutch Application Chart (4L80E Auto. Trans.) ... 7A2-11
Clutch Assembly and Pilot Bearing ... 7C-12
Clutch Coil and Housing Assembly Replacement (A/C) ... 1B-60
Clutch Coil and/or Pulley Rim Replacement — Multi-Rib Type (A/C) ... 1B-63
Clutch Controls ... 7C-1
Clutch Cross Lever ... 7C-9

Clutch Diagnosis 7C-3
Clutch Drive Hub Replacement (A/C) 1B-60
Clutch Linkage 7C-9
Clutch Master Cylinder and Reservoir 7C-6
Clutch Master Cylinder Unit Repair 7C-7
Clutch Pedal Free Travel Adjustment 7C-12
Clutch Plate and Hub Assembly
Replacement (A/C) 1B-55
Clutch Rotor and/or Bearing Replacement —
Multi-Rib Type (A/C) 1B-61
Clutch Secondary (Slave) Cylinder and Hydraulic
Line Replacement 7C-7
Clutch Secondary (Slave) Cylinder
Unit Repair 7C-8
Code 1, 11, and 12 - Electronic Control Unit
Malfunction (RWAL) 5A3-20
Code 10 - Brake Lamp Switch Circuit
(RWAL) 5A3-19
Code 12—No Reference Pulse
(Diesel Emissions) 6E2-22
Code 14—Coolant Temp. Sen. Ckt (Lo)
(Diesel Emissions) 6E2-24
Code 15—Coolant Temp. Sen. Ckt (Hi)
(Diesel Emissions) 6E2-26
Code 2 - Open Isolation Valve or Faulty
ECU (RWAL) 5A3-11
Code 21—TPS Circuit (Voltage High)
(Diesel Emissions) 6E2-28
Code 22—TPS Circuit (Voltage Low)
(Diesel Emissions) 6E2-30
Code 23—TPS Circuit (Misadjusted)
(Diesel Emissions) 6E2-32
Code 24—VSS Circuit Fault
(Diesel Emissions) 6E2-34
Code 3 - Open Dump Valve or Faulty
ECU (RWAL) 5A3-12
Code 31—MAP Voltage Low
(Diesel Emissions) 6E2-36
Code 32—EGR Circuit Loop Error
(Diesel Emissions) 6E2-38
Code 33—MAP Voltage High
(Diesel Emissions) 6E2-40
Code 4 - Grounded Antilock Valve
Switch (RWAL) 5A3-13
Code 5 - Excessive Actuations of the Dump
Valve During an Antilock Stop
(RWAL) 5A3-14
Code 51—PROM Problem (Diesel Emissions) 6E2-43
Code 52—ECM Fault (Diesel Emissions) 6E2-43
Code 53—Voltage Reference Overload
(Diesel Emissions) 6E2-42
Code 6 - Erratic Speed Sensor (RWAL) 5A3-15
Code 7 - Shorted Isolation Valve or
Faulty ECU (RWAL) 5A3-16
Code 8 - Shorted Dump Valve or
Faulty ECU (RWAL) 5A3-17
Code 9 - Open Circuit to the Speed
Signal (RWAL) 5A3-18
Code Identification (Diesel Emissions) 6E2-10
Codes 13, 14, and 15 - Electronic Control
Unit Malfunction (RWAL) 5A3-21
Coil Spring Replacement (Independent
Front Suspension) 3C-18
Cold Advance Control Relay
Replacement 6E2-63
Cold Advance Control Solenoid
Replacement 6E2-63
Cold Advance Control System
(Diesel Emissions) 6E2-63
Cold Advance Solenoid 6C2-2
Combination Valve 5A-10
Combined Ratio (Electronic Transmission Control) .. 7A4-9
Common Automotive Abbreviations 0A-27
Component Locations
(Electronic Transmission Control) 7A4-2
Compression Check
(6.2L Diesel Engine) 6A-3
Compression Check
(Gasoline Engine) 6A-3
Compressor (A/C) 1B-30
Compressor Cut-Out Switches 1B-10
Compressor Replacement (R/V) 1B-31
Condenser (A/C) 1B-30
Condenser Replacement 1B-34
Connecting Rod and Piston Replacement
(4.3L V6) 6A3-19
Connecting Rod and Piston Replacement
(5.0L and 5.7L V8) 6A4-18
Connecting Rod and Piston Replacement
(6.2L Diesel) 6A6-18
Connecting Rod and Piston Replacement
(7.4L V8) 6A5-15
Connecting Rod Replacement
(P Motorhome) 3B3-12
Connecting Rod Replacement
(V and P FS3 Models) 3B3-9
Connectors and Terminals
(Diesel Emissions) 6E2-44
Constant Velocity Joint Replacement 4A-13
Control Assembly Replacement (A/C) 1B-41
Control Linkages (Manual Transmission) 7B-1
Control Module Replacement 9-19
Control Rod Adjustment
(Automatic Parking Brake) 5C-12
Control System 6E2-4
Control Valve Assembly (4L80E Auto. Trans.) 7A2-74
Control Valve Replacement
(Automatic Parking Brake) 5C-11
Convenience Center 8A-22
Coolant Level Indicator Diagnosis 6B1-4
Coolant Pump Replacement 6B1-22
Coolant Recovery System 6B2-14
Coolant Recovery Tank Replacement 6B1-7
Coolant Temperatures Sensor (CTS)
(Electronic Transmission Control) 7A4-6
Coolant-Control Valve Replacement,
Auxiliary Heater 1A-16
Cooling Fan Replacement, Auxiliary 6B1-20
Cooling System Diagnosis 6B1-4
Cooling System Flushing 6B1-7
Cooling System Problems 6B1-6
Core Replacement, Heater 1A-9
Cowl Vent Grille Replacement 2B-5
Crankcase Ventilation System 6E2-2
Cranking Speed Check
(6.3L Diesel Engine) 6A-4

Cranking System Diagnosis 6D2-4
Cranking System Maintenance 6D2-9
Crankshaft Oil Seal Replacement, Rear
(4.3L V6) 6A3-16
Crankshaft Oil Seal Replacement, Rear
(5.0L and 5.7L V8) 6A4-15
Crankshaft Oil Seal Replacement, Rear
(6.2L Diesel) 6A6-17
Crankshaft Oil Seal Retainer Replacement, Rear
(4.3L V6) 6A3-16
Crankshaft Oil Seal Retainer Replacement, Rear
(5.0L and 5.7L V8) 6A4-15
Crankshaft Replacement (4.3L V6) 6A3-23
Crankshaft Replacement
(5.0L and 5.7L V8) 6A4-22
Crankshaft Replacement
(6.2L Diesel) 6A6-21
Crankshaft Replacement (7.4L V8) 6A5-18
Crankshaft Seal Replacement,
Front (4.3L V6) 6A3-13
Crankshaft Seal Replacement,
Front (5.0L and 5.7L V8) 6A4-12
Crankshaft Seal Replacement,
Front (6.2L Diesel) 6A6-10
Cruise Control Brake Release Switch
Replacement 9-19
Cruise Control Clutch Release Switch
Replacement 9-19
Cruise Control Components 9-3
Cruise Control Description 9-1
Cruise Control Diagnosis 9-4
Cruise Control Operation 9-2
Cruise Control Servo Replacement 9-21
Cruise Control Stepper Motor (Module) Replacement
and Adjustment 9-20
Cruise Control Vacuum Release Valve
Replacement 9-18
CS-130 and CS-144 Charging Systems Diagnosis .. 6D3-8
CS-130 Generators 6D3-2
CS-144 Generator 6D3-4
Current Drain Test 6D1-7
Cylinder Head Replacement
(4.3L V6) 6A3-12
Cylinder Head Replacement
(5.0L and 5.7L V8) 6A4-11
Cylinder Head Replacement (6.2L Diesel) 6A6-8
Cylinder Head Replacement (7.4L V8) 6A5-7

D

Dana Full-Floating Axle (9 ¾ and
10 ½-Inch Ring Gear) 4B1-15
Daytime Running Lamp System (DRL)
(Diagnosis) 8B-10
Daytime Running Lamp Systems (DRL) 8B-2
Dead Weight Platform Hitch Replacement
(Utility Vehicle and Suburban) 2A-13
Defroster Duct and Heater Core
Replacement 1B-37
Diagnosis (Diesel Emissions) 6E2-7
Diagnosis (Diesel Emissions) 6E2-63
Diagnosis - (Diesel Emissions)
Electrical 6E2-56
Diagnosis Charts (3 Column)
(4L80E Auto. Trans.) 7A2-12
Diagnosis Charts (4L60 Auto Trans.) 7A1-9
Diagnosis Information (4L60 Auto Trans.) 7A1-3
Diagnosis Information (4L80E Auto. Trans.) 7A2-2
Diagnosis of: ..... -
Water in Fuel Light 6A-7
Water in Fuel Light (Diesel Engine Only) 6C-2
Advance Piston 6C2-3
Back-up Lamp System 8B-23
Basic Electrical Circuits 8A-4
Battery 6D1-4
Cab and Body 10B-2
Cargo and Underhood Lamp Circuits 8B-26
Clutch 7C-3
Coolant Level Indicator 6B1-4
Cooling System 6B1-4
Cranking System 6D2-4
Cruise Control System 9-4
CS-130 Generator 6D3-8
CS-144 Generator 6D3-8
Daytime Running Lights (DRL) 8B-10
Diesel Engine 6A-5
Diesel Fuel Injection 6C2-2
Distributor/Timing System 6D4-3
Dome Lamp (Without Lamp Group) 8B-24
EGR System 6E2-54
Electrical/Vacuum System (A/C) 1B-22
Engine Noises 6A-8
Engine Power Problems 6A-11
EPR System 6E2-54
Exhaust System 6F-2
Fan Clutch 6B1-3
Four-Wheel Drive Indicator Lamp 8B-29
Frame 2A-3
Front Axle 3C-3
Front Driving Axle 4C-1
Front End 3A-3
Front Suspension 3C-3
Front Wheel Bearings 3C-4
Fuel Gage 8C-4
Fuel Tank Selector Valve 6C-13
Generator 6D3-5
Generator Noise 6D3-5
Glow Plug System 6D6-3
Headlamps 8B-10
Heater Circuit 1A-6
Heater System 1A-7
Heating and Ventilation 1A-3
Horn System 8D-6
Housing Pressure Cold Advance Solenoid 6C2-2
Hydraulic Brakes 5A-2
Hydro-Boost System 5A1-3
Ignition System 6D4-3
Insufficient Heat 1A-3
Lighting System 8B-10
Manual Seat Adjuster 10A2-2
Manual Transmission 7B-2
Oil Leak 6A-17
Oil Pressure Gage 8C-5
Parking Lights, Front 8B-19
Poor Fuel Economy/Smoke/Oil/Odors 6A-15
Power Door Lock System 8A-20
Power Steering 3B1-5
Power Window System 8A-21
Powertrain/Transmission Control Module 7A4-3
Propeller Shaft 4A-4

Diagnosis of:
Radiator 6B2-5
Radio Systems 9-24
Rear Axle 4B1-2
Rear Window Defogger System 9-43
Refrigerant Recovery and Recycling System 1B-17
Refrigerant System 1B-9
Running, Park, License Lamps 8B-20
Shutdown Solenoid 6C2-3
Side Marker Lights, Front 8B-19
Side Marker Lights, Rear 8B-20
Spark Plugs 6A-17
Spark Plugs 6D4-5
Speedometer System 8C-3
Starter Motor Noise 6D2-9
Starting/Idling/Shutoff Problems 6A-13
Steering Linkage 3B3-2
Stop Lamp System 8B-22
Temperature Gage 8C-6
Thermostat 6B1-3
Transfer Case 7D-3
Turn Signal and Hazard Systems 8B-21
Uncommon Cooling System Problems 6B1-6
Universal Joints 4A-4
Vacuum Booster 5A1-2
Voltmeter 8C-7
Washer System (P-Motorhome Models) 8D-13
Wheels and Tires 3E-4
Windshield Washer
(R/V and P-Commercial Models) 8D-13
Windshield Wiper (P-Motorhome Models) 8D-11
Windshield Wiper
(R/V and P-Commercial Models) 8D-7
Windshield Wiper/Washer System 8E-2
Wiper (P-Motorhome Models) 8D-12
Wiper Delay Circuit 8D-14
Diagnostic Mode (Diesel Emissions) 6E2-8
Diagnostic RF Sniffer 9-36
Diesel Batteries 6D1-3
Diesel Diagnostic Circuit Check
(Diesel Emissions) 6E2-12
Diesel Emission Diagnosis 6E2-7
Diesel Engine Diagnosis 6A-5
Diesel Engine Fuel Filters 6C-3
Diesel Fuel Filter Adapter Replacement 6C-5
Diesel Fuel Filter Replacement 6C-4
Diesel Fuel Injection Diagnosis 6C2-2
Differential Bearing Noise Test 4C-2
Digital Ratio Adaptor Controller
(DRAC) Replacement 8C-11
Dimmer Switch Replacement 8B-35
Dipstick Tube Replacement (6.2L Diesel) 6A6-14
Distributor 6D4-1
Distributor Timing System Diagnosis 6D4-3
Dome Lamp (Without Lamp Group)
(Diagnosis) 8B-24
Dome Lamp Assembly Replacement 8B-40
Door Adjustment
(R/V Model Rear Doors) 10A-24
Door Adjustment
(R/V Model Side Front Doors) 10A-3
Door Adjustment (R/V Model
Side Rear Doors) 10A-15
Door Air Hinge Replacement
(R/V Model Rear Doors) 10A-24
Door Air Valve Replacement
(R/V Model Side Rear Doors) 10A-23
Door and Hinge Replacement
(R/V Model Side Front Doors) 10A-2
Door and Hinge Replacement
(R/V Model Side Rear Doors) 10A-14
Door Edge Guard Molding 10B-7
Door Inside Handle Replacement
(R/V Model Side Rear Doors) 10A-21
Door Jamb Switch Replacement 8B-40
Door Lock Motor Replacement, Power
(R/V Model Side Front Doors) 10A-10
Door Lock Motor, Power 8A-22
Door Lock Replacement
(R/V Model Side Rear Doors) 10A-20
Door Lock Switch, Power 8A-22
Door Lock System, Power 8A-18
Door Outside Handle Replacement
(R/V Model Rear Doors) 10A-29
Door Outside Handle Replacement
(R/V Model Side Rear Doors) 10A-21
Door Trim Panel Replacement
(R/V Model Rear Doors) 10A-26
Door Trim Panel Replacement
(R/V Model Side Front Doors) 10A-4
Door Trim Panel Replacement
(R/V Model Side Rear Doors) 10A-16
Door Weatherstrip Replacement
(R/V Model Side Rear Doors) 10A-23
Door Window Replacement (R/V Model
Side Rear Doors) 10A-17
Downshift Relay Replacement
(4L80E Auto. Trans.) 7A2-71
Draining the Fuel Filter (Diesel Engine) 6C-3
Draining the Fuel Tank 6C-7
Drive Belt Replacement 6B1-11
Drive Belt Tension Specifications 0B-26
Drive Shaft Seal Replacement
(Diesel Fuel Injection) 6C2-23
Driveability Symptoms
(Electronic Transmission Control) 7A4-2
Driveline Angles 0C-13
Drum Assembly, Rear Axle 4B1-16
Drum Replacement, Non-Demountable
Type (9 ¾ and 10 ½-Inch Ring Gear) 4B1-19
Dust Deflector, Rear Axle 4B1-13

E

ECM Check (Diesel Emissions) 6E2-16
ECM Connector Identification and
Voltages (Diesel Emissions) 6E2-48
EGR Diagnosis 6E2-54
EGR Valve Replacement 6E2-54
EGR/EPR Solenoid 6E2-53
EGR/EPR Solenoid Replacement 6E2-54
Electrical Diagnosis Tools
(4L80E Auto. Trans.) 7A2-67
Electrical Wiring Diagrams
(4L60 Auto Trans.) 7A1-43
Electrical/Garage Shift Test
(4L80E Auto. Trans.) 7A2-2

Electro Static Discharge
(Electronic Transmission Control) 7A4-2
Electronic Component Malfunctions
(4L80E Auto. Trans.) 7A2-35
Electronic Control Module
(Diesel Emissions) 6E2-5
Electronic Control Module Check
(Diesel Emissions) 6E2-16
Electronic Control System, Diesel 6E2-4
Electronic Controller/Glow Plug Relay
Assy (Diesel Emissions) 6E2-58
Electrostatic Discharge 0A-19
Electrostatic Discharge Damage
(Diesel Emissions) 6E2-8
Electrostatic Discharge Damage
(Electronic Transmission Control) 7A4-2
Emblems 2B-11
Emergency Starting Due to a
Discharged Battery 6D1-6
End Gate Cover Replacement
(Utility Vehicle Models) 10A5-5
End Gate Outside Crank Replacement
(Suburban Models) 10A5-17
End Gate Outside Crank Replacement
(Utility Vehicle Models) 10A5-10
End Gate Replacement
(Fleet Side Models) 10A5-1
End Gate Replacement
(Suburban Models) 10A5-12
End Gate Replacement
(Utility Vehicle Models) 10A5-3
End Gate Trim and Cover Panel
Replacement (Suburban Models) 10A5-14
Engine Control/Ignition Switch 8C-2
Engine Cooling Fan and Fan Clutch
Replacement 6B1-20
Engine Cooling System Checks 6B1-2
Engine Gaskets Replacing 6A-2
Engine Identification Number 0A-6
Engine Lubrication: ..... -
4.3L V6 ..... 6A3-2
5.0L and 5.7L V8 ..... 6A4-2
6.2L Diesel 6A6-1
7.4L V8 ..... 6A5-2
Engine Mountings:
4.3L V6 ..... 6A3-23
5.0L and 5.7L V8 ..... 6A4-25
6.2L Diesel 6A6-22
7.4L V8 ..... 6A5-19
Engine Noise Diagnosis 6A-8
Engine or Exhaust Noises 4C-2
Engine Power Problem Diagnosis 6A-11
Engine Replacement:
4.3L V6 ..... 6A3-25
5.0L and 5.7L V8 ..... 6A4-29
6.2L Diesel 6A6-28
7.4L V8 ..... 6A5-25
EPR Diagnosis 6E2-54
EPR Replacement 6E2-54
EPR Solenoid Electrical Check
(Diesel Emissions) 6E2-18
EPR Vacuum Circuit Check
(Diesel Emissions) 6E2-20
Evacuating and Charging Procedures (A/C) 1B-27
Evaporator (A/C) 1B-30
Evaporator Core Replacement 1B-50
Evaporator Core Replacement
(Diesel Engine) 1B-37
Evaporator Core Replacement
(Except Diesel Engines) 1B-36
Excessively Tight Wheels 3E-8
Exhaust Gas Recirculation (EGR) System 6E2-53
Exhaust Manifold Replacement:
4.3L V6 ..... 6A3-11
5.0L and 5.7L V8 ..... 6A4-11
6.2L Diesel 6A6-3
7.4L V8 ..... 6A5-7
Exhaust Noises 4C-2
Exhaust Parts, Installing 6F-3
Exhaust Parts, Removing 6F-3
Exhaust Pressure Regulator Solenoid
Electrical Check 6E2-18
Exhaust Pressure Regulator Vacuum
Circuit Check 6E2-20
Exhaust System Inspection 6F-3
Expansion Valve (A/C) 1B-30
Expansion Valve Replacement 1B-47
Exterior Colors (P) 2B-27
Exterior Colors (R/V) 2B-25
Exterior Colors
(Utility Vehicle and Suburban) 2B-26

F

Fan Clutch Diagnosis 6B1-3
Fastener Markings 0A-18
Fastener Strength Identification 0A-17
Fastener Torque Specifications
(4L80E Auto. Trans.) 7A2-83
Fender Replacement, Front 2B-6
Fender Replacement, Rear 2B-8
Fiberglass Top Replacement 2B-24
Filler Tube Replacement
(4L60 Auto Trans.) 7A1-68
Filler Tube Replacement
(4L80E Auto. Trans.) 7A2-80
Filter Installation (A/C) 1B-30
Flexible Coupling Replacement
(R/V and P Models; Motorhome) 3F2-11
Floor Compartment Door Lock
Replacement (Utility Vehicle) 10A4-10
Floor Compartment Replacement, Front 8B-43
Floor Compartment Replacement, Front
(Utility Vehicle) 10A4-10
Fluid and Filter Change (4L60 Auto Trans.) 7A1-61
Fluid Flow and Circuit Description
(4L60 Auto Trans.) 7A1-19
Fluid Flow and Circuit Descriptions
(4L80E Auto. Trans.) 7A2-38
Fluid Leak Diagnosis (4L60 Auto Trans.) 7A1-55
Fluid Passages (4L60 Auto Trans.) 7A1-46
Fluid Passages (4L80E Auto. Trans.) 7A2-60
Flywheel and Torque Converter
Vibration Test 7A1-55
Flywheel Replacement:
4.3L V6 ..... 6A3-23
5.0L and 5.7L V8 ..... 6A4-22
6.2L Diesel 6A6-29
Automatic and Manual Transmission
(7.4L V8) 6A5-18

Force Motor
(Electronic Transmission Control) 7A4-10
Four Wheel Drive Indicator
Bulb Replacement 8B-44
Four Wheel Drive Shift Indicator
Bulb Replacement 8B-44
Four-Wheel Drive Indicator Lamp 8B-8
Four-Wheel Drive Indicator Lamp (Diagnosis) 8B-29
Frame Alignment, Checking 2A-2
Frame Diagnosis 2A-3
Frame Service, Minimizing 2A-2
Frames 2A-2
Frames, Repairing Cracks 2A-5
Frames, Straightening 2A-5
Frames, Welding 2A-6
Front Axle Diagnosis 3C-3
Front Axle Replacement (I-Beam
(RPO FS3) Front Suspension) 3C-36
Front Bumper Replacement
(P Models) 2A-15
Front Bumper Replacement (P Models)
(With RPO FS3 Front Axle) 2A-16
Front Cover Replacement:
4.3L V6 ..... 6A3-14
5.0L and 5.7L V8 ..... 6A4-13
6.2L Diesel 6A6-11
7.4L V8 ..... 6A5-9
Front Driving Axle Assembly
Replacement 4C-3
Front Driving Axle Automatic Locking
Hub Service 4C-5
Front Driving Axle Joint Component Replacement ... 4C-4
Front Driving Axle Manual Locking Hub
Rebuild Procedure 4C-7
Front Driving Axle Manual Locking
Hub Replacement 4C-6
Front Driving Axle Shaft Replacement 4C-2
Front End Alignment Adjustments 3A-3
Front End Alignment Requirements 3A-3
Front End Diagnosis 3A-3
Front End Inspection 3A-3
Front Glass Run Channel Replacement
(R/V Model Side Rear Doors) 10A-19
Front Seat (Suburban) 10A2-23
Front Seat and Seat Adjuster
Replacement 10A2-3
Front Servo Replacement
(4L80E Auto. Trans.) 7A2-76
Front Suspension Diagnosis 3C-3
Front Trim Replacement 10A4-1
Front Wheel Bearings Diagnosis 3C-4
Front Yoke Replacement 4A-12
Fuel Control (All Gas Engines)
Electronic Transmission Control) 7A4-6
Fuel Filter Adaptor Replacement
(Diesel Engine) 6C-5
Fuel Filter Assembly Component
Replacement (Diesel Engine) 6C-5
Fuel Filter Plug Replacement
(Diesel Engine) 6C-5
Fuel Filter Replacement (Diesel Engine) 6C-4
Fuel Filter Replacement
(Diesel Fuel Injection) 6C2-3
Fuel Gage 8C-1
Fuel Gage Diagnosis 8C-4
Fuel Gage Replacement 8C-12
Fuel Gage Sending Unit 6C-12
Fuel Gage Sending Unit Replacement 6C-12
Fuel Lines 6C-11
Fuel Pump 6C-6
Fuel Pump Replacement 6C-7
Fuel Pump Tests (Diesel Engine) 6C-6
Fuel Pump Tests (TBI Engine) 6C-6
Fuel Sender Unit Replacement 8C-13
Fuel System Cleaning (Diesel Engine) 6C-8
Fuel System Cleaning (TBI Engine) 6C-8
Fuel Tank 6C-7
Fuel Tank Filler Neck 6C-11
Fuel Tank Leak Test 6C-10
Fuel Tank Purging 6C-9
Fuel Tank Replacement 6C-10
Fuel Tank Selector Valve 6C-13
Fuel Tank Selector Valve Diagnosis 6C-13
Fuel Tank Selector Valve Replacement 6C-15
Full-Floating Axle (12-Inch Ring Gear) (Rockwell) .. 4B1-21
Full-Floating Axle (9 ¾ and 10 ½-Inch
Ring Gear) (Dana) 4B1-15
Fuse Block 8A-13
Fuse Replacement (A/C) 1B-43
Fuse Replacement (A/C) 1B-51

G

Gage Calibration (A/C) 1B-27
Generator (12-SI 100) 6D3-2
Generator (CS-130) 6D3-2
Generator (CS-144) 6D3-2
Generator Belt Adjustment 6D3-9
Generator Diagnosis 6D3-5
Generator Electrical Tests 6D3-5
Generator Replacement 6D3-10
Generator, Noise Diagnosis 6D3-5
Glass Polishing 10A5-6
Glow Plug 6D6-4
Glow Plug Afterstart Diagnosis 6D6-1
Glow Plug Afterstart Diagnosis 6D6-4
Glow Plug Circuit
(Diesel Emissions) 6E2-58
Glow Plug Circuit Check 6D6-3
Glow Plug Circuit Operation 6D6-2
Glow Plug Control System
(Diesel Emissions) 6E2-58
Glow Plug Relay Assembly Electronic Controller ... 6D6-2
Glow Plug System Diagnosis 6D6-3
Governor (4L60 Auto Trans.) 7A1-61
Graphic Symbols 0A-19
Grille Replacement 2B-5

H

Handle and Control Assembly
Replacement (Suburban Models) 10A5-14
Handle and Control Assembly
Replacement (Utility Vehicle Models) 10A5-5
Handle and Latch Replacement
(Fleet Side Models) 10A5-2
Handle Replacement, Door Inside
(R/V Model Side Front Doors) 10A-12
Handle Replacement, Door Outside
(R/V Model Side Front Doors) 10A-11

Handling Refrigerant-12 ..... 1B-6
Headlamp Adjustment 8B-33
Headlamp Switch 8C-2
Headlamp Switch Replacement 8B-34
Headlamp Systems 8B-2
Headlamp Unit Replacement 8B-33
Headlamps (Diagnosis) 8B-10
Headliner and Trim Replacement
(Bonus Cab) 10A4-4
Headliner and Trim Replacement
(Suburban) 10A4-12
Headliner and Trim Replacement
(Utility Vehicle) 10A4-9
Heat Insufficient Diagnosis 1A-3
Heater Circuit Diagnosis 1A-6
Heater Control Assembly Replacement 1A-11
Heater Control Blower Switch
Replacement 1A-11
Heater Control Cable Adjustment 1A-11
Heater Control Cable Replacement 1A-11
Heater Control Resistor Replacement 1A-13
Heater Core Replacement, Auxiliary 1A-14
Heater Distributor Assembly 1A-2
Heater Distributor Case and Core
Replacement 1A-9
Heater Hose Routing 1A-9
Heater System 1A-7
Heater System Circuit 8A-19
Heating and Ventilation Diagnosis 1A-3
Hinge Replacement (Suburban Models) 10A5-12
Hinge Replacement (Utility Vehicle Models) 10A5-5
Hinge, Door (R/V Model Side Front Doors) 10A-2
Hinge, Hood 2B-2
Hoist Test Procedures (4L80E Auto. Trans.) 7A2-3
Hood Hinge Replacement 2B-2
Hood Latch, Primary 2B-2
Hood Latch, Secondary 2B-3
Hood Ornament Replacement 2B-4
Hood Release Cable Replacement 2B-4
Horn Replacement 8D-15
Horn System Diagnosis 8D-6
Horn Systems 8D-1
Housing Pressure Cold Advance 6C2-5
Housing Pressure Cold Advance
Solenoid Diagnosis 6C2-2
HR-6 Compressor 1B-55
Hub and Drum Assembly Replacement
(9 ¾ and 10 ½-Inch Ring Gear) 4B1-16
Hub Runout 0C-9
Hydraulic Clutch Bleeding 7C-11
Hydraulic Clutch Pedal 7C-4
Hydraulic Head Seal Replacement
(Diesel Fuel Injection) 6C2-22
Hydraulic Lifter Replacement (4.3L V6) 6A3-9
Hydraulic Lifter Replacement
(5.0L and 5.7L V8) 6A4-9
Hydraulic Lifter Replacement (6.2L Diesel) 6A6-6
Hydraulic Lifter Replacement (7.4L V8) 6A5-6
Hydraulic Lines, Clutch 7C-7
Hydraulic Pumps 3B1-1
Hydro-Boost Diagnosis 5A1-3
Hydro-Boost Replacement 5A1-5
Hydro-Boost System Tests 5A1-3
Hydro-Boost System, Bleeding 5A1-8

I

Identification of Transfer Case 7D-2
Idle Speed Adjustment (Diesel Fuel Injection) 6C2-4
Idler Arm Adjustment — P Motorhome 3B3-2
Idler Arm Inspection 3B3-2
Idler Arm Replacement 3B3-4
Ignition Coil Replacement 6D4-7
Ignition Coil Test 6D4-6
Ignition Distributor Replacement 6D4-6
Ignition Switch 8C-2
Ignition Switch Replacement 8C-17
Ignition Switch Replacement (Tilt Column) 3F2-18
Ignition System Diagnosis 6D4-3
Ignition Timing 6D4-2
Information Sensors (Electronic
Transmission Control) 7A4-3
Injection Line Replacement
(Diesel Fuel Injection) 6C2-6
Injection Nozzle Replacement
(Diesel Fuel Injection) 6C2-10
Injection Nozzle Tests
(Diesel Fuel Injection) 6C2-11
Injection Pump Pressure Test
(Diesel Fuel Injection) 6C2-24
Injection Pump Replacement
(Diesel Fuel Injection) 6C2-7
Injection Timing Adjustment
(Diesel Fuel Injection) 6C2-8
Inner Window Weatherstrip Replacement
(R/V Model Side Rear Doors) 10A-18
Input Information (Diesel Emissions) 6E2-6
Input Information
(Electronic Transmission Control) 7A4-6
Input/Output Sensor
(Electronic Transmission Control) 7A4-7
Instrument Cluster Bulb Replacement 8C-16
Instrument Cluster Replacement 8C-16
Instrumentation 6D6-1
Instrumentation (Diesel Emissions) 6E2-58
Insufficient Cooling "Quick-Check"
Procedure 1B-9
Intake Manifold Replacement:
4.3L V6 ..... 6A3-8
5.0L and 5.7L V8 ..... 6A4-7
6.2L Diesel 6A6-2
7.4L V8 ..... 6A5-5
Interior Colors (P) 2B-27
Interior Colors (R/V) 2B-26
Intermediate Shaft (P Models; Commercial) 3F2-26
Intermediate Shaft Replacement
(P Models; Commercial) 3F2-11
Intermediate Shaft Replacement
(R/V Models) 3F2-10
Isolation/Dump Valve (RWAL) 5A3-22

L

Laminated (Printed) Circuit
Replacement 8C-16
Lamp Housing and Seal Replacement,
Rear 8B-36
Lamps 8B-55
Latch and Support Assembly Replacement
(Utility Vehicle and Suburban) 10A2-20

Latch Replacement (Suburban Models) 10A5-14
Latch Replacement (Utility Vehicle Models) 10A5-6
Leaf Spring Assembly Replacement
(Rear Suspension) 3D-6
Leaf Spring and Bushing Replacement
(I-Beam (RPO FS3) Front Suspension) 3C-55
Leaf Spring Replacement (I-Beam
(RPO FS3) Front Suspension) 3C-37
Leaks Dust 10B-6
Leaks Water 10B-6
Left Door Lower Latch Replacement
(R/V Model Rear Doors) 10A-29
Left Door Weatherstrip Replacement
(R/V Model Rear Doors) 10A-31
License Plate Bracket 2A-12
License Plate Lamp Replacement 8B-36
Lighting System Diagnosis 8B-10
Line Pressure Check (4L60 Auto Trans.) 7A1-5
Line Pressure Check Procedure
(4L60 Auto Trans.) 7A1-7
Line Pressure Check Procedure
(4L80E Auto. Trans.) 7A2-7
Lock Cylinder Coding 0A-29
Lock Cylinder Replacement 3F2-17
Lock Cylinder Replacement
(R/V Model Side Front Doors) 10A-11
Lock Replacement, Door
(R/V Model Side Front Doors) 10A-10
Locking Hub, Automatic 4C-5
Locking Hub, Manual 4C-6
Lower Ball Joint Replacement
(Independent Front Suspension) 3C-19
Lower Control Arm Replacement
(Independent Front Suspension) 3C-25
Lubrication 0B-23
Lubrication (4L80E Auto. Trans.) 7A2-84
Lubrication Capacities 0B-20

M

Main Bearing Replacement:
4.3L V6 ..... 6A3-21
5.0L and 5.7L V8 ..... 6A4-21
6.2L Diesel 6A6-20
7.4L V8 ..... 6A5-17
Maintenance of Radiator 6B2-5
Maintenance Schedule 0B-2
Malfunction Code Actions
(4L80E Auto. Trans.) 7A2-34
Malfunction Code Diagnosis Charts
(4L80E Auto. Trans.) 7A2-32
Manual Locking Hub Rebuild Procedure
(Front Driving Axle) 4C-7
Manual Locking Hub Replacement
(Front Driving Axle) 4C-6
Manual Seat Adjuster Diagnosis 10A2-2
Manual Transmission Diagnosis 7B-2
Manual Transmission Drain and Fill 7B-2
Manual Transmission Rear Oil Seal 7B-2
Manual Transmission Replacement 7B-4
Manual Transmission Shift Control Lever 7B-4
Manual Transmission Vehicle Speed Sensor 7B-4
Marker Lamp Bulb Replacement, Rear 8B-36
Marker Lamp Replacement, Front Side 8B-36
Marker Lamps, Front Side (Diagnosis) 8B-19
Marker Lamps, Rear Side (Diagnosis) 8B-20
Marking TDC on the Front Housing
(Diesel Fuel Injection) 6C2-9
Master Cylinder Inspection 5A-5
Master Cylinder Replacement 5A-21
Master Cylinder, Filling 5A-5
Master Cylinders 5A-21
Match Mounting 0C-8
Measuring Camshaft Lobe Lift (7.4L V8) 6A5-12
Measuring Wheel and Tire Runout 3E-4
Mechanical Clutch Pedal 7C-5
Metri-Pack Connectors 5A3-25
Metric Fasteners 0A-10
Minimum-Maximum Governor Replacement
(Diesel Fuel Injection) 6C2-17
Minor Compressor Repairs 1B-53
Model Reference 0A-4
Moldings 2B-21
Mounting Tire On Wheel 3E-8
Multifunction Switch Replacement 9-20

N

Nameplates 10B-7
Noise Shields 2B-11
Non-Uniform Tires, Correcting 0C-9

O

Oil Cooler, Lines and Hoses 6B1-29
Oil Filter Adapter and Oil Filter Bypass
Valve Replacement (4.3L V6) 6A3-22
Oil Filter Bypass Valve
(5.0L and 5.7L V8) 6A4-20
Oil Filter Bypass Valve Replacement
(6.2L Diesel) 6A6-21
Oil Hoses 6B1-29
Oil Leak Diagnosis 6A-17
Oil Lines 6B1-29
Oil Pan Replacement:
4.3L V6 ..... 6A3-14
5.0L and 5.7L V8 ..... 6A4-14
7.4L V8 ..... 6A5-10
6.2L Diesel 6A6-15
Oil Pressure Gage 8C-1
Oil Pressure Gage Diagnosis 8C-5
Oil Pressure Gage Replacement 8C-14
Oil Pressure Gage Sensor Replacement 8C-15
Oil Pump Drive Replacement
(6.2L Diesel) 6A6-10
Oil Pump Replacement:
6.2L Diesel 6A6-10
4.3L V6 ..... 6A3-15
5.0L and 5.7L V8 ..... 6A4-14
7.4L V8 ..... 6A5-11
6.2L Diesel 6A6-16
Oil Seal, Rear Axle 4B1-13
Oil Seal, Rear Axle 4B1-9
On-Vehicle Service 3F2-9
Operated by the PCM/TCM
(Electronic Transmission Control) 7A4-10
Operation of Transfer Case 7D-1
Orders of Vibration 0C-2
Orifice (Expansion Tube) Replacement (A/C) 1B-37
Outer Window Weatherstrip Replacement
(R/V Model Side Rear Doors) 10A-19

Output Shaft Seal Replacement (Transfer Case) 7D-7
Outside Rear View Mirror Replacement, Outside (R/V Model Side Front Doors) 10A-13
Overdrive Ratio (Electronic Transmission Control) .. 7A4-9
Overhead Console Bulb Replacement 8B-41
Overhead Console Replacement 8B-41
Owner Inspection and Service 0B-15

P

P Model Fuses 8B-53
Paint 2B-25
Paint Codes 2B-25
Painting Sheet Metal 10B-5
Park Lamps, Rear 8B-5
Parking Brake Adjustment 5C-10
Parking Brake Cable Replacement 5C-5
Parking Brake Pedal or Handle Replacement 5C-2
Parking Lamp Replacement, Front 8B-35
Parking Lamp Systems, Front 8B-3
Parking Lamps, Front (Diagnosis) 8B-19
Parking Lock Pawl and Actuator (4L80E Auto. Trans.) 7A2-79
Passenger Front Bucket Seat Replacement (Utility Vehicle) 10A2-3
PCM/TCM Intermittent Codes or Performance (Electronic Transmission Control) 7A4-4
Pedal Travel, Checking 5A-15
Pinion Bearing Noise Test 4C-2
Pinion Flange (12-Inch Ring Gear) 4B1-23
Pinion Flange (9 ¾ and 10 ½-Inch Ring Gear) 4B1-21
Pinion Flange Replacement 4A-12
Pinion Flange, Dust Deflector/Oil Seal Replacement (8 ½ and 9 ½-Inch Ring Gear) 4B1-13
Pinion Oil Seal/Pinion Flange Replacement (12-Inch Ring Gear) 4B1-23
Pinion Oil Seal/Pinion Flange Replacement (9 ¾ and 10 ½-Inch Ring Gear) ... 4B1-20
Piston Replacement (4.3L V6) 6A3-19
Piston Replacement (5.0L and 5.7L V8) 6A4-18
Piston Replacement (6.2L Diesel) 6A6-18
Pitman Arm Replacement 3B3-5
Pitman Shaft Seal Replacement 3B1-14
Plenum Valve Replacement (A/C) 1B-40
POT Coupling Replacement 3F2-11
Poor Fuel Economy/Smoke/Oil/Odors Diagnosis 6A-15
Power Door Lock Motor Replacement 8A-22
Power Door Lock Motor Replacement (R/V Model Side Rear Doors) 10A-20
Power Door Lock Switch Replacement 8A-22
Power Door Lock System 8A-18
Power Door Lock System Diagnosis 8A-20
Power Steering Diagnosis 3B1-5
Power Steering Fluid Leak Check 3B1-8
Power Steering Fluid Level Adjustment 3B1-12
Power Steering Gear Adjustments 3B1-17
Power Steering Gear High-Point Centering 3B1-13
Power Steering Gear Replacement 3B1-13
Power Steering Gear, Integral 3B1-1
Power Steering Hoses 3B1-24
Power Steering Maintenance 3B1-11
Power Steering Oil Coolers 3B1-24
Power Steering Pump Belt Tension Adjustment 3B1-11
Power Steering Pump Replacement (R and P Models) 3B1-19
Power Steering Pump Replacement (V Models) 3B1-21
Power Steering System Test 3B1-8
Power Steering System, Bleeding 3B1-12
Power Steering System, Flushing 3B1-12
Power Window Motor Replacement 8A-22
Power Window Switch Replacement 8A-22
Power Window System 8A-18
Power Window System Diagnosis 8A-21
Powertrain/Transmission Control Module (Electronic Transmission Control) 7A4-3
Powertrain/Transmission Control Module Diagnosis 7A4-3
PROM (Electronic Transmission Control) 7A4-6
Preparing Your Truck for Storage 0A-5
Pressure Regulator Valve (4L60 Auto Trans.) 7A1-75
Pressure Sensing Switch (A/C) 1B-10
Prevailing Torque Fasteners 0A-17
Primary Hood Latch Replacement 2B-2
Prom (Diesel Emissions) 6E2-9
Prom Replacement (Diesel Emissions) 6E2-48
Propeller Shaft 4A-1
Propeller Shaft 0C-10
Propeller Shaft Balance Check 4A-5
Propeller Shaft Balance Check 0C-11
Propeller Shaft Balancing 0C-11
Propeller Shaft Brake Replacement 5C-9
Propeller Shaft Diagnosis 4A-4
Propeller Shaft Phasing 0C-13
Propeller Shaft Replacement (Front Drive) 4A-11
Propeller Shaft Replacement (Rear Drive) 4A-7
Propeller Shaft Runout Check 4A-5
Propeller Shaft Runout Check 0C-10
Pulley and Bearing Assembly Replacement (A/C) 1B-56
Pump Cover Seal and/or Guide Stud Replacement (Diesel Fuel Injection) 6C2-15
Pump Retainer Housing Replacement 7D-9
Puncture-Sealing Tires 3E-3
Push Rod Replacement (5.0L and 5.7L V8) 6A4-5
Pushrod Replacement (4.3L V6) 6A3-5
Pushrod Replacement (6.2L Diesel) 6A6-5

R

R-4 Compressor 1B-60
R/V Cab Harness Routings 8A-9
R/V Model Fuses 8B-52
Radiator Core, Aluminum 6B2-18
Radiator Diagnosis 6B2-5
Radiator Drain Cock, Aluminum 6B2-21
Radiator Fan Shroud Replacement 6B2-6
Radiator Maintenance 6B2-5
Radiator Pressure Cap 6B2-13
Radiator Replacement 6B2-9
Radiator Support Replacement 2B-10
Radiator Tanks, Aluminum 6B2-19
Radiator, Aluminum 6B2-16

Radio Description 9-24
Radio Diagnosis 9-24
Radio Receiver Replacement 9-36
Ratio (Electronic Transmission Control) 7A4-9
Reactivating the Vehicle After
Long Storage 0A-6
Rear Axle Assembly Replacement
(All Axles) 4B1-9
Rear Axle Identification 4B1-25
Rear Axle Operation 4B1-1
Rear Crankshaft Oil Seal Replacement
(7.4L V8) 6A5-12
Rear Duct Replacement 1B-46
Rear Extension Housing 7D-9
Rear Extension Housing Bushing
(4L60 Auto Trans.) 7A1-72
Rear Extension Oil Seal (4L60 Auto Trans.) 7A1-71
Rear Extension Oil Seal (4L80E Auto. Trans.) 7A2-72
Rear Oil Seal (Manual Transmission) 7B-2
Rear Seat (Utility Vehicle) 10A2-23
Rear Seat Belt Replacement (Crew Cab) 10A2-15
Rear Seat Belt Replacement
(Suburban) 10A2-20
Rear Seat Belt Replacement
(Utility Vehicle) 10A2-18
Rear Seat Cover Rod Replacement
(Utility Vehicle) 10A2-16
Rear Seat Replacement (Crew Cab) 10A2-14
Rear Seat Replacement (Suburban) 10A2-20
Rear Seat Replacement (Utility Vehicle) 10A2-16
Rear Seat Storage Strut Replacement
(Utility Vehicle) 10A2-17
Rear Seatback and Catch Replacement
(Crew Cab) 10A2-14
Rear Servo Replacement (4L80E Auto. Trans.) ... 7A2-77
Rear View Mirror Replacement,
West Coast Outside (R/V Model Side
Front Doors) 10A-13
Rear Window Defogger Diagnosis 9-43
Rear Window Defogger Harness 9-41
Rear Window Defogger Switch Replacement 9-43
Rear Window Defogger, Testing Grid Lines 9-44
Recommended Fluids and Lubricants 0B-17
Reed Tachometer 0C-4
Refrigerant and Oil Capacity (A/C) 1B-6
Refrigerant Drum Method 1B-29
Refrigerant Line Restrictions (A/C) 1B-30
Refrigerant Lines and Fittings 1B-7
Refrigerant Oil Distribution 1B-27
Refrigerant Recovery and Recycling 1B-17
Refrigerant Recovery and Recycling
System Diagnosis 1B-17
Refrigerant System Diagnosis 1B-9
Refrigerant System, Testing 1B-10
Refrigerant-12 Description 1B-6
Refrigerant-12 Hose Replacement 1B-44
Regular Production Options (RPO) — Tires 0A-26
Regulator Replacement (Suburban Models) 10A5-15
Regulator Replacement (Utility Vehicle Models) ... 10A5-7
Relay Rod Replacement 3B3-5
Relay Valve Replacement
(Automatic Parking Brake) 5C-11
Remote Control Replacement
(R/V Model Side Rear Doors) 10A-23
Resistor Replacement, Auxiliary Heater 1A-14
Right Door Control Assembly Replacement
(R/V Model Rear Doors) 10A-28
Right Door Lower Latch Replacement
(R/V Model Rear Doors) 10A-28
Right Door Upper Latch Replacement
(R/V Model Rear Doors) 10A-28
Right Door Weatherstrip Replacement
(R/V Model Rear Doors) 10A-31
Road Test Procedure 7A1-3
Road Test Procedure (4L80E Auto. Trans.) 7A2-6
Road Testing 0C-2
Rocker Arm and Pushrod Replacement:
4.3L V6 ..... 6A3-5
5.0L and 5.7L V8 ..... 6A4-5
7.4L V8 ..... 6A5-3
Rocker Arm Cover Replacement:
4.3L V6 ..... 6A3-5
5.0L and 5.7L V8 ..... 6A4-5
6.2L Diesel 6A6-4
7.4L V8 ..... 6A5-3
Rocker Arm Stud Replacement
(4.3L V6) 6A3-9
Rocker Arm Stud Replacement
(5.0L and 5.7L V8) 6A4-9
Rocker Arm, Shaft and Pushrod
Replacement (6.2L Diesel) 6A6-5
Rockwell Full-Floating Axle
(12-Inch Ring Gear) 4B1-21
Rotor Servicing 5A2-6
RPO Listing
(Regular Production Option) 0A-23
RTV Sealer and Anaerobic Gasket
Eliminator Usage 6A-2
Run Channel Replacement
(Suburban Models) 10A5-16
Run Channel Replacement
(Utility Vehicle Models) 10A5-9
Run Channel Replacement, Rear Glass
(R/V Model Side Front Doors) 10A-8
Running Lamps and Marker Lamps, Rear 8B-5
Running, Park and License Lamps (Diagnosis) 8B-20
Runout, Wheel 0C-7
RWAL Diagnostic Circuit Check 5A3-5
RWAL Electronic Control Unit (RWAL) 5A3-22
RWAL Wiring Diagram (R/V) 5A3-4

S

Sash Assembly Replacement
(Suburban Models) 10A5-16
Sash Assembly Replacement
(Utility Vehicle Models) 10A5-9
Scan Tool (Diesel Emissions) 6E2-8
Scan Tool (Electronic Transmission Control) 7A4-4
Scheduled Maintenance Services 0B-5
SES Light Inoperative (Diesel Emissions) 6E2-14
Sealing Tires 3E-3
Seat Adjuster Adjustment 10A2-2
Seat Belt Replacement 10A2-5
Seat Belt Replacement (High Back Bucket) 10A2-7
Seatback and Hinge Replacement
(Utility Vehicle and Suburban) 10A2-19
Second Seat (Suburban) 10A2-24
Secondary Hood Latch and Spring Replacement 2B-3
Secondary Weatherstrip Replacement
(R/V Model Rear Doors) 10A-32

Semi-Floating Axle (8 ½- and 9 ½-Inch Ring Gear) 4B1-9
Sensors (Diesel Emissions) 6E2-6
Sensors (Diesel Emissions) 6E2-9
Sensors Replacement (Diesel Emissions) 6E2-48
Separating the Tire from the Wheel 3E-8
Service Parts Identification Label 0A-2
Service Engine Soon Lamp (Diesel Emissions) 6E2-6
Service Precautions 6D4-6
Service Replacement Filter Recommendations 0B-28
Service Replacement Part Recommendations 0B-28
Service Station Checks 0B-19
Servo (4L60 Auto Trans.) 7A1-64
Sheet Metal Adjustments 2B-11
Sheet Metal Repair 2B-21
Sheet Metal Unit Replacement 2B-11
Shift Control Lever (Manual Transmission) 7B-4
Shift Indicator Adjustment (4L60 Auto Trans.) 7A1-77
Shift Indicator Replacement (4L60 Auto Trans.) 7A1-77
Shift Lever Replacement (Transfer Case) 7D-5
Shift Linkage (4L60 Auto Trans.) 7A1-57
Shift Linkage (4L80E Auto. Trans.) 7A2-68
Shift Linkage Adjustment (4L80E Auto. Trans.) 7A2-69
Shift Solenoid "A" (Electronic Transmission Control) 7A4-10
Shift Solenoid "B" (Electronic Transmission Control) 7A4-10
Shift Speed Chart (4L80E Auto. Trans.) 7A2-5
Shock Absorber Bench Test 3C-4
Shock Absorber Replacement (I-Beam (RPO FS3) Front Suspension) 3C-29
Shock Absorber Replacement (I-Beam (RPO FS3) Front Suspension) 3C-38
Shock Absorber Replacement (Independent Front Suspension) 3C-9
Shock Absorber Replacement (Rear Suspension) 3D-1
Shock Absorber, Steering 3B3-6
Shut Down Solenoid 6C2-3
Shutdown and/or Cold Advance Solenoid Replacement (Diesel Fuel Injection) 6C2-20
Shutdown Solenoid Diagnosis 6C2-3
SI Charging System 6D3-5
Side Cover Gasket Replacement (Diesel Fuel Injection) 6C2-21
Side Marker Lamp Systems, Front 8B-3
Six Lobed Socket Head Fasteners 0A-19
Skid Plate Replacement 7D-5
Slip (Electronic Transmission Control) 7A4-9
Solenoid (Electronic Transmission Control) 7A4-10
Solenoid, Shift "A" 7A4-10
Solenoid, Shift "B" 7A4-10
Solenoid, Torque Converter Clutch 7A4-11
Spare Tire Carriers 3E-11
Spark Plug Diagnosis 6A-17
Spark Plug Diagnosis 6D4-5
Spark Plug Wires 6D4-3
Spark Plug Wire Replacement 6D4-8
Spark Plugs 6D4-3
Speaker Replacement 9-37
Special Tools 3F2-28
Specifications 3F2-27
Speed Sensor (RWAL) 5A3-23
Speedometer 8C-1
Speedometer Calibration (RWAL) 5A3-23
Speedometer Replacement 8C-8
Speedometer System Diagnosis 8C-3
Spindle Replacement (I-Beam (RPO FS3) Front Suspension) 3C-48
Spring Assembly Replacement 2B-2
Sprocket Replacement (6.2L Diesel) 6A6-13
Stabilizer Shaft Replacement (I-Beam (RPO FS3) Front Suspension) 3C-31
Stabilizer Shaft Replacement (I-Beam (RPO FS3) Front Suspension) 3C-38
Stabilizer Shaft Replacement (Independent Front Suspension) 3C-9
Stabilizer Shaft Replacement (Rear Suspension) 3D-1
Standard Torque Specifications 0A-18
Starter Motor Noise Diagnosis 6D2-4
Starter Motor Replacement 6D2-9
Starting/Idling/Shutoff Problem Diagnosis 6A-13
Station (ACR) Setup and Maintenance 1B-18
Stationary Glass Replacement 10A5-3
Stationary Glass/Window Run Channel Assembly Replacement (R/V Model Side Rear Doors) 10A-17
Steering Arm, Knuckle and Spindle Replacement (I-Beam (RPO FS3) Front Suspension) 3C-35
Steering Column Replacement 3F2-12
Steering Knuckle and Arm Replacement (I-Beam (RPO FS3) Front Suspension) 3C-49
Steering Knuckle Replacement (Independent Front Suspension) 3C-17
Steering Linkage Diagnosis 3B3-2
Steering Shock Absorber Inspection 3B3-6
Steering Shock Absorber Replacement 3B3-7
Steering Wheel Refinishing 10B-5
Steering Wheel Replacement 3F2-10
Stop Lamp System (Diagnosis) 8B-22
Stoplamp Switch 5A-19
Storage — Thirty Days or More 0A-6
Storage — Up To Thirty Days 0A-5
Storage Location 0A-5
Striker Replacement (R/V Model Rear Doors) 10A-25
Surge Tank 6B2-14
Suspension Unit Replacement (Independent Front Suspension) 3C-26

T

Tailgate Lamp Assembly and Bulb Replacement 8B-37
Taillamp Bulb Replacement 8B-36
TCC Shudder Diagnosis (4L80E Auto. Trans.) 7A2-9
Temperature Door Cable Adjustment 1B-41
Temperature Gage 8C-2
Temperature Gage Diagnosis 8C-6
Temperature Gage Replacement 8C-13
Temperature Gage Sensor Replacement 8C-14
Thermostat Diagnosis 6B1-3
Thermostat Housing Crossover Replacement 6B1-10

Thermostat Replacement 6B1-7
Third Seat (Suburban) 10A2-24
Throttle Position Sensor (TPS)
Replacement (Diesel Fuel Injection) 6C2-13
Throttle Position Sensor Adjustment
(Diesel Fuel Injection) 6C2-14
Throttle Position Service (TPS)
(Electronic Transmission Control) 7A4-6
Throttle Shaft Seal Replacement
(Diesel Fuel Injection) 6C2-18
Tie Rod Replacement
(R and P Models Except Motorhome) 3B3-8
Tie Rod Replacement (V and P FS3 Models) 3B3-9
Timing Chain and Sprocket Replacement
(6.2L Diesel) 6A6-13
Tire Chain Usage 3E-2
Tire Inflation Pressure 3E-15
Tire Load Limits 3E-15
Tire Noises 4C-1
Tire Pressure Charts 0B-24
Tire Replacement 3E-2
Tire Speed Chart 0C-6
Tone Alarm Switch Replacement 3F2-18
Top Strap Belt Anchor Installation 10A2-22
Torque Converter Clutch 6E2-55
Torque Converter Clutch (TCC) Diagnosis 7A1-5
Torque Converter Clutch Diagnosis
(4L80E Auto. Trans.) 7A2-7
Torque Converter Clutch Electrical
Controls (4L60 Auto Trans.) 7A1-56
Torque Converter Evaluation
(4L80E Auto. Trans.) 7A2-7
Torque Convertor Clutch Diagnosis
(4L60 Auto Trans.) 7A1-56
Torque Convertor Evaluation
(4L60 Auto Trans.) 7A1-5
Torque Rod Replacement (Suburban Models) 10A5-12
Torque Rod Replacement
(Utility Vehicle Models) 10A5-4
Torsional Damper and Front Crankshaft
Seal Replacement:
4.3L V6 ..... 6A3-13
5.0L and 5.7L V8 ..... 6A4-12
6.2L Diesel 6A6-10
7.4L V8 ..... 6A5-8
Trailer Wiring 8B-7
Transfer Case Adapter Replacement 7D-10
Transfer Case Diagnosis 7D-3
Transfer Case Identification 7D-2
Transfer Case Linkage Adjustment 7D-4
Transfer Case Oil Change 7D-4
Transfer Case Operation 7D-1
Transfer Case Output Shaft Seal
Replacement 7D-7
Transfer Case Rear Extension Housing,
Pump Retainer Housing, Replacement 7D-9
Transfer Case Replacement 7D-10
Transfer Case Shift Lever Replacement 7D-5
Transfer Case Vent Hose Replacement 7D-7
Transmission Cooler Flushing (4L60 Auto Trans.) .. 7A1-77
Transmission Cooler Flushing
(4L80 Auto Trans.) 7A2-80
Transmission Definitions 7A-1
Transmission Diagnosis (4L60 Auto Trans.) 7A1-3
Transmission Fluid Checking Procedure 7A-4
Transmission Fluid Checking Procedure
(4L80E Auto. Trans.) 7A2-68
Transmission Fluid Level Information 7A-4
Transmission Identification Information 7A-1
Transmission Identification Number 0A-6
Transmission Noise and Vibration Analysis 7A-3
Transmission Preliminary Checking
Procedure 7A-3
Transmission Range (PSM)
(Electronic Transmission Control) 7A4-8
Transmission Replacement
(4L60 Auto Trans.) 7A1-72
Transmission Replacement
(4L80E Auto. Trans.) 7A2-73
Transmission Replacement (Manual) 7B-4
Transmission Shift Effort (Manual) 7B-2
Trim Panel Replacement, Roof Rear
Header (Suburban) 10A4-15
Trim Panel, Door
(R/V Model Side Front Doors) 10A-4
Trouble Code Identification (RWAL) 5A3-3
Trouble Codes, Clearing (RWAL) 5A3-3
Tune-Up Information 6A-2
Turbine Speed (Electronic Transmission Control) ... 7A4-9
Turn Signal and Hazard Systems
(Diagnosis) 8B-21
Turn Signal Switch Replacement 3F2-16
Turn, Stop and Hazard Systems, Rear 8B-5
TV Cable (4L60 Auto Trans.) 7A1-59
TV Cable Adjustment (4L60 Auto Trans.) 7A1-60

U

Underhood Reel-Type Lamp Bulb Replacement 8B-44
Underhood Reel-Type Lamp Replacement 8B-43
Unit Repair 3F2-19
Universal Joint 4A-3
Universal Joint Diagnosis 4A-4
Universal Joint Replacement 4A-12
Upper & Lower Control Arm Pivot Shaft
and Bushing Replacement
(Independent Front Suspension) 3C-22
Upper Ball Joint Replacement
(Independent Front Suspension) 3C-21
Upper Control Arm Replacement
(Independent Front Suspension) 3C-26

V

Vacuum Booster Diagnosis 5A1-2
Vacuum Booster Replacement 5A1-5
Vacuum Line Replacement — Dash (A/C) 1B-43
Vacuum Line Replacement —
Engine Compartment (A/C) 1B-43
Vacuum Pump 6E2-2
Vacuum Regulator Valve Adjustment 6C2-5
Vacuum System 1B-26
Vacuum System Check (A/C) 1B-27
Vacuum Tank Replacement (A/C) 1B-42
Valve Adjustment (4.3L V6) 6A3-6
Valve Adjustment (5.0L and 5.7L V8) 6A4-6
Valve Body (4L60 Auto Trans.) 7A1-69
Valve Body Pressure Switch Replacement
(4L60 Auto Trans.) 7A1-71

Valve Spring Replacement (4.3L V6) 6A3-6
Valve Spring Replacement (5.0L and 5.7L V8) 6A4-6
Valve Spring Replacement (6.2L Diesel) 6A6-7
Valve Stem Seal and Valve Spring Replacement:
4.3L V6 ..... 6A3-6
5.0L and 5.7L V8 ..... 6A4-6
6.2L Diesel 6A6-7
7.4L V8 ..... 6A5-4
Vehicle Identification Number 0A-2
Vehicle Lifting Procedures 0A-10
Vehicle Speed Sensor (Manual Transmission) 7B-4
Vehicle Speed Sensor Replacement 8C-10
Vehicle Speed Sensor Replacement
(4L60 Auto Trans.) 7A1-63
Vehicle Speed Sensors (4L80E Auto. Trans.) 7A2-72
Vent Glass Replacement
(R/V Model Side Front Doors) 10A-6
Vent Hose Replacement (Transfer Case) 7D-7
Vent Replacement 1A-13
Vent Window Adjustment
(R/V Model Side Front Doors) 10A-6
Vent/Window Run Channel Assembly Replacement
(R/V Model Side Front Doors) 10A-5
Vibration 0C-1
Vibration Categories 0C-1
Vibration Classes 0C-2
Vibration Diagnosis Charts 0C-16
Visual/Physical Inspection
(Electronic Transmission Control) 7A4-2
Voltmeter 8C-2
Voltmeter Diagnosis 8C-7
Voltmeter Replacement 8C-15

W

Washer Fluid Container Replacement 8E-5
Washer Motor Replacement 8D-15
Washer Nozzle Connector Replacement 8E-5
Washer Nozzle Replacement 8E-4
Washer Supply Hose Replacement 8E-4
Washer System Diagnosis
(P-Motorhome Models) 8D-13
Water in Fuel Light (Diesel Engines Only) 6C-2
Water in Fuel Light Diagnosis 6A-7
Weather-Pack Connectors 5A3-25
Weatherstrip Replacement (Suburban Models) ... 10A5-17
Weatherstrip Replacement
(Utility Vehicle Models) 10A5-11
Weatherstrip Replacement,
Door (R/V Model Side Front Doors) 10A-12
Weatherstrip Replacement, Inner Window
(R/V Model Side Front Doors) 10A-7
Weatherstrip Replacement, Outer Window
(R/V Model Side Front Doors) 10A-8
Weight Distribution Platform Hitch
Replacement (Suburban Only) 2A-14
Weight Distribution Platform Hitch
Replacement (Utility Vehicle Only) 2A-14
Wheel and Tire Assembly, Installation 3E-9
Wheel and Tire Balancing 3E-11
Wheel and Tire Balancing 0C-6
Wheel and Tire Diagnosis 3E-4
Wheel and Tire Runout, Check 3E-4
Wheel and Tire Runout, Measure 3E-4
Wheel Bearing Adjustment
(9 ¾ and 10 ½-Inch Ring Gear) 4B1-19
Wheel Bearing Adjustment
(I-Beam (RPO FS3) Front Suspension) 3C-34
Wheel Bearing Adjustment
(Independent Front Suspension) 3C-15
Wheel Bearing/Cup Replacement
(9 ¾ and 10 ½-Inch Ring Gear) 4B1-17
Wheel Bearing Noise Test 4C-2
Wheel Codes 3E-15
Wheel Cylinder Rebuilding (Drum) 5A2-14
Wheel Cylinder Replacement (Drum) 5A2-13
Wheel Hub Bolt Replacement
(I-Beam (RPO FS3) Front Suspension) 3C-35
Wheel Hub Bolt Replacement
(I-Beam (RPO FS3) Front Suspension) 3C-47
Wheel Hub Bolt Replacement
(Independent Front Suspension) 3C-16
Wheel Hub/Rotor Assembly Replacement
(I-Beam (RPO FS3) Front Suspension) 3C-32
Wheel Hub/Rotor Assembly Replacement
(I-Beam (RPO FS3) Front Suspension) 3C-39
Wheel Hub/Rotor Assembly Replacement
(Independent Front Suspension) 3C-10
Wheel Runout 0C-7
Wheel Specifications 3E-15
Wheel Stud Nut Torque
(Single Front and Dual Rear Wheels) 3E-15
Wheel Stud Nut Torque
(Single Front and Rear Wheels) 3E-15
Wheel Stud Replacement
(8 ½ and 9 ½-Inch Ring Gear) 4B1-13
Wheel Stud Replacement
(9 ¾ and 10 ½-Inch Ring Gear) 4B1-19
Wheel, Aluminum 3E-10
Wheelhouse Panel Replacement 2B-7
Wheels, Excessively Tight 3E-8
Window Glass Seal Replacement
(Suburban Models) 10A5-17
Window Glass Seal Replacement
(Utility Vehicle Models) 10A5-10
Window Motor 8A-22
Window Motor and Blockout Switch Replacement
(Utility Vehicle Models) 10A5-7
Window Regulator Replacement
(R/V Model Side Front Doors) 10A-8
Window Regulator Replacement
(R/V Model Side Rear Doors) 10A-19
Window Replacement
(R/V Model Rear Doors) 10A-26
Window Replacement, Door
(R/V Model Side Front Doors) 10A-7
Window System, Power 8A-18
Windshield Replacement 10A5-1
Windshield Washer Diagnosis
(R/V and P-Commercial Models) 8D-13
Windshield Wiper and Washer
(P-Motorhome Models) 8D-2
Windshield Wiper and Washer
(R/V and P-Commercial Models) 8D-1
Windshield Wiper Delay Circuit 8D-3
Windshield Wiper Diagnosis
(P-Motorhome Models) 8D-11

Windshield Wiper Diagnosis
(R/V and P-Commercial Models) 8D-7
Windshield Wiper Linkage, Transmission,
Arms and Blades 8D-3
Windshield Wiper/Washer System Diagnosis 8E-2
Wiper Arm Assembly Replacement 8E-4
Wiper Blade Assembly Replacement 8E-4
Wiper Delay Circuit Diagnosis 8D-14
Wiper Delay Module Replacement 8D-17
Wiper Delay Switch Replacement 8D-17
Wiper Diagnosis (P-Motorhome Models) 8D-12
Wiper Insert Replacement 8E-3
Wiper Motor Replacement 8D-15
Wiper Transmission Assembly Replacement 8E-6
Wire Harness & Connectors
(Diesel Emissions) 6E2-6
Wire Harness (Diesel Emissions) 6E2-44
Wiring and Connector Repair (RWAL) 5A3-24
Wiring Diagram (4L80E Auto. Trans.) 7A2-36
Wiring Harness and Connectors
(Electronic Transmission Control) 7A4-3
Wiring Harness Location (Lighting Systems) 8B-46
Wiring Repair (RWAL) 5A3-25
Wiring Size Conversion Table 8A-3

Y

Yoke Replacement 4A-16

GM

Automotive
Service
Educational
Program

TT

Transportation
Technician

ASE
CERTIFIED
®

We employ technicians certified by the
National Institute for
AUTOMOTIVE SERVICE EXCELLENCE
Let us show you their credentials

GMC
TRUCK

MEDIUM
TRUCK

PROFESSIONAL TRUCK ADVISORS GUILD